This is a digital copy of a book that was preserved for generations on library shelves before it was carefully scanned by Google as part of a project to make the world's books discoverable online.

It has survived long enough for the copyright to expire and the book to enter the public domain. A public domain book is one that was never subject to copyright or whose legal copyright term has expired. Whether a book is in the public domain may vary country to country. Public domain books are our gateways to the past, representing a wealth of history, culture and knowledge that's often difficult to discover.

Marks, notations and other marginalia present in the original volume will appear in this file - a reminder of this book's long journey from the publisher to a library and finally to you.

**Usage guidelines**

Google is proud to partner with libraries to digitize public domain materials and make them widely accessible. Public domain books belong to the public and we are merely their custodians. Nevertheless, this work is expensive, so in order to keep providing this resource, we have taken steps to prevent abuse by commercial parties, including placing technical restrictions on automated querying.

We also ask that you:

+ *Make non-commercial use of the files* We designed Google Book Search for use by individuals, and we request that you use these files for personal, non-commercial purposes.
+ *Refrain from automated querying* Do not send automated queries of any sort to Google's system: If you are conducting research on machine translation, optical character recognition or other areas where access to a large amount of text is helpful, please contact us. We encourage the use of public domain materials for these purposes and may be able to help.
+ *Maintain attribution* The Google "watermark" you see on each file is essential for informing people about this project and helping them find additional materials through Google Book Search. Please do not remove it.
+ *Keep it legal* Whatever your use, remember that you are responsible for ensuring that what you are doing is legal. Do not assume that just because we believe a book is in the public domain for users in the United States, that the work is also in the public domain for users in other countries. Whether a book is still in copyright varies from country to country, and we can't offer guidance on whether any specific use of any specific book is allowed. Please do not assume that a book's appearance in Google Book Search means it can be used in any manner anywhere in the world. Copyright infringement liability can be quite severe.

**About Google Book Search**

Google's mission is to organize the world's information and to make it universally accessible and useful. Google Book Search helps readers discover the world's books while helping authors and publishers reach new audiences. You can search through the full text of this book on the web at `http://books.google.com/`

Stanford University Libraries
3 6105 001 159 990

STANFORD UNIVERSITY LIBRARIES

# MAKERSTOUN MAGNETIC OBSERVATORY.



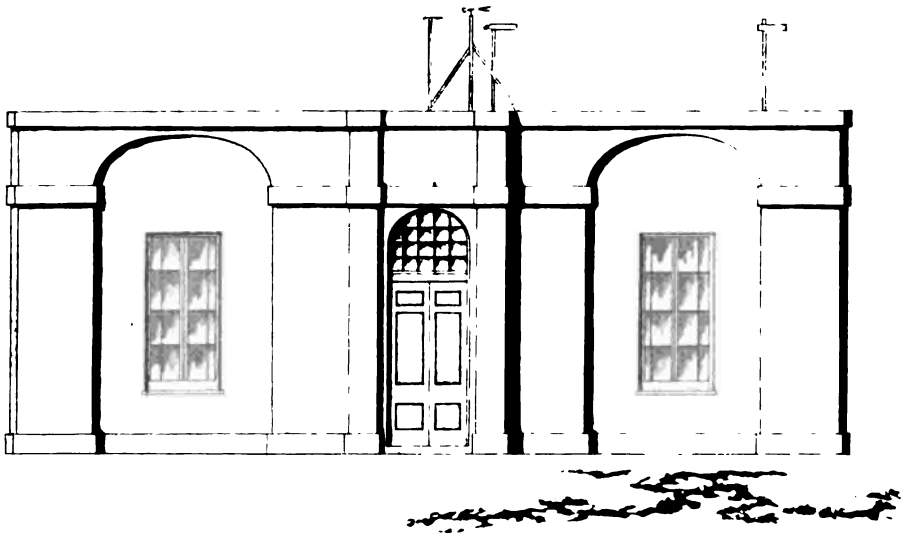

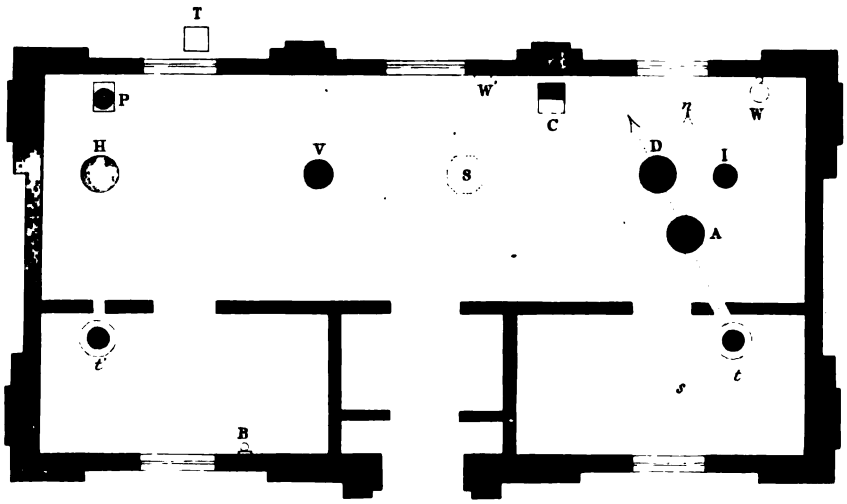


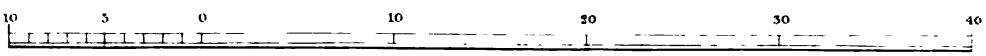

# TRANSACTIONS

OF THE

# ROYAL SOCIETY

OF

# EDINBURGH.

VOL. XVIII.

CONTAINING THE

MAKERSTOUN MAGNETICAL AND METEOROLOGICAL OBSERVATIONS

FOR

1844.

LIBRARY
LELAND STANFORD JUNIOR
UNIVERSITY

EDINBURGH:
PUBLISHED BY ROBERT GRANT & SON, 82 PRINCES STREET; AND
T. CADELL, STRAND, LONDON.

MDCCCXLVIII.

132156

LIBRARY
LELAND STANFORD JUNIOR
UNIVERSITY

# OBSERVATIONS

IN

# MAGNETISM AND METEOROLOGY,

MADE AT

# MAKERSTOUN IN SCOTLAND,

IN THE OBSERVATORY OF

GENERAL SIR THOMAS MAKDOUGALL BRISBANE, BART.,

G.C.B., G.C.H., D.C.L., LL.D., F.R.S., F.R.A.S., H.M.R.I.A., PRESIDENT OF THE ROYAL SOCIETY OF EDINBURGH,
AND CORRESPONDING MEMBER OF THE INSTITUTE OF FRANCE,

## IN 1844.

FORMING VOL. XVIII. OF THE TRANSACTIONS OF THE ROYAL SOCIETY OF EDINBURGH.

DISCUSSED AND EDITED BY

JOHN ALLAN BROUN, ESQ.,

DIRECTOR OF THE OBSERVATORY.

EDINBURGH:

PRINTED BY NEILL AND COMPANY.

MDCCCXLVIII.

# CONTENTS.


| | Page |
|---|---|
| INTRODUCTION— | |
| *Position and Description of the Observatory,* | ix |
| *System of Observation, and Staff of Observers,* | x |
| *Declinometer—* | |
| Description of the Declinometer, | xi |
| Values of the Scale Divisions, | xii |
| Scale Readings for the Magnetic Axis, | xiii |
| Corrections, | xiii |
| Removal of Torsion, &c., | xv |
| Time of Vibration, | xvi |
| Method of Observation, | xvi |
| Absolute Magnetic Declination, | xvi |
| *Unifilar Magnetometer and Observations of the Absolute Horizontal Intensity of the Earth's Magnetism—* | |
| Position and Description of the Instrument, | xix |
| Formula of Reduction, methods of Observing, &c., | xx |
| Results of Observations, | xxvi |
| *Bifilar or Horizontal Force Magnetometer—* | |
| Description of the Instrument, | xxvii |
| Usual formula of Reduction, | xxviii |
| New formula of Reduction, | xxix |
| Determinations of the Coefficient of Reduction, | xxx |
| Coefficients applicable to the observations since 1841, | xxxii |
| Constants for Reduction after turning the Arms of the Torsion Circle, | xxxiii |
| Time of Vibration of the Bifilar Magnet, | xxxiii |
| Mode of Observation, | xxxiii |
| *Balance or Vertical Force Magnetometer—* | |
| Description of the Instrument, | xxxiv |
| Usual formula of Reduction, | xxxv |
| Times of Vibration, | xxxv |
| Conclusions from the observations of the Time of Vibration, | xxxix |
| Observations to discover the causes of the anomalies in the Time of Vibration, | xl |
| Insufficiency of the usual formula, | xlii |
| Observations for a statical determination of the Balance Coefficient, | xlii |
| Adjustment of the Balance, and connection of the Observations, | xliv |
| Method of Observation, | xlv |

PAGE

*The Temperature Coefficients of the Deflecting, Balance, and Bifilar Magnets—*
Temperature Coefficient of the Deflection Magnet, ..... xlv
Coefficient Constant for High and Low Temperatures, ..... xlvi
Temperature Coefficient of the Bifilar Magnet by hot-water experiments, ..... xlvi
Coefficient Constant for High and Low Temperatures, ..... xlvi
Method of determining the Coefficient by the comparisons of the usual observations, xlvii
Conclusion that the Variations of the Horizontal Component are independent of the temperature of the soil and atmosphere, ..... xlviii
Determinations of the Coefficient, ..... xlviii
Error of the determinations by hot and cold water experiments, ..... xlix
Temperature Coefficient of the Balance Magnet by hot-water experiments, ..... xlix
Coefficient Constant for High and Low Temperatures, ..... xlix
Conclusion that the Variations of the Vertical Component are independent of the temperature of the soil and atmosphere, ..... l
Determinations of the Coefficient by comparisons of the usual observations, ..... li

*Inclinometer—*
Description of the Instrument, ..... lii
Insufficiency of the Observations, ..... liii
Improved method of determining the Absolute Vertical Component and Inclination, liii

*Barometer—*
Description of the Instrument, ..... liv
Indirect Comparisons with the Standard of the Royal Society of London, ..... liv
Corrections applied to the Observations, ..... lv

*Thermometers—*
Description and Position of the Dry and Wet Bulb Thermometers, ..... lv
Scale Errors, ..... lvii
Maximum and Minimum Thermometers, ..... lviii

*Actinometer—*
Description of the first Instrument, ..... lviii
Description of the second Instrument, ..... lix

*Rain-Gauges—*
Description and Positions of the Gauges, ..... lx

*Vanes and Anemometer—*
Position of the Vanes, ..... lx
Description of the Anemometer, ..... lxi
Mode of Observation, ..... lxii

*State of the Sky—*
Mode of estimating the Extent of Sky Clouded, and the Motions of Clouds, ..... lxii
Symbols used for the amount of Sunshine and Rain, ..... lxiii

*Clock—*
State of the Clock in the Magnetic Observatory, ..... lxiii

*Description of the Tables of the Observations,* ..... lxiii

*Reference to the Abstracts of Results,* ..... lxvi

*Account of the Curves projected by the Anastatic Process,* ..... lxvi

PAGE

MAGNETICAL OBSERVATIONS—

Hourly Observations of Magnetometers, ..... 1
Term-Day Observations of Magnetometers, ..... 71
Extra Observations of Magnetometers, ..... 91
Observation of Magnetic Dip, ..... 161
Observations for the Absolute Horizontal Intensity, ..... 165

METEOROLOGICAL OBSERVATIONS—

Hourly Meteorological Observations, ..... 171
Daily Meteorological Observations, ..... 310
Temperature of Water in Pump-Wells, ..... 311
Observations of the Actinometer, ..... 313
Meteorological Notes on Shooting Stars, Thunder-Storms, &c., ..... 320

ABSTRACTS OF THE RESULTS OF THE MAGNETICAL OBSERVATIONS—

*Results for the Magnetic Declination,* ..... 329
Mean Declination and Secular Change, ..... 330
Annual Period, ..... 331
Differences of the Daily Means from the Monthly Means, ..... 332
Variations with reference to the Positions of the Moon, ..... 333
Diurnal Ranges, Annual Variation, ..... 334
Diurnal Ranges with reference to the Positions of the Moon, ..... 336
Diurnal Variation of Magnetic Declination, ..... 337
Ranges of Mean Diurnal Variation, ..... 341
Variation with reference to the Moon's Hour-Angle, ..... 342
Intermittent Disturbances; effect on the Yearly Mean Declination, ..... 343
Intermittent Disturbances; effect on the Monthly Mean Declination, ..... 343
Intermittent Disturbances; effect on the Hourly Means of Declination, ..... 343
Mean Difference of a Single Observation from the Monthly Mean; Annual Variation, ..... 346
Mean Difference of a Single Observation from the Monthly Mean with reference to the Position of the Moon, ..... 347
Mean Difference of a Single Observation from the Monthly Mean; Diurnal Variation, ..... 347
Number of Positive Differences; Annual Variation, ..... 349
Number of Positive Differences; Diurnal Variation, ..... 349
Mean Disturbance; Annual Variation, ..... 349
Diurnal Variation of the Positive and Negative Sums of Disturbance, ..... 350
Diurnal Variation of the Positive and Negative Means of Disturbance, ..... 350
Number of Positive Disturbances; Annual Variation, ..... 350
Number of Positive Disturbances; Diurnal Variation, ..... 350
Probable Disturbance, ..... 351
Probable Disturbance; Annual Variation, ..... 352
Probable Disturbance; Diurnal Variation, ..... 352
Note on the Diurnal Variation of Magnetic Declination, ..... 354

PAGE

*Results for the Horizontal Component of Magnetic Force—*

Secular Change, ..... 356
Annual Period, ..... 356
Differences of the Daily Means from the Monthly Means, ..... 357
Variations with reference to the Positions of the Moon, ..... 358
Diurnal Ranges; Annual Variation, ..... 358
Diurnal Ranges with reference to the Positions of the Moon, ..... 360
Diurnal Variation of the Horizontal Component, ..... 361
Ranges of the Mean Diurnal Variation, ..... 363
Variation with reference to the Moon's Hour-Angle, ..... 364
Intermittent Disturbances; effect on the Yearly Mean, ..... 365
Intermittent Disturbances; effect on the Monthly Means, ..... 365
Intermittent Disturbances; effect on the Hourly Means, ..... 366
Mean Difference of a Single Observation from the Monthly Means; Annual Variation, ..... 368
Mean Difference of a Single Observation from the Monthly Mean with reference to the Positions of the Moon, ..... 369
Mean Difference of a Single Observation from the Monthly Means; Diurnal Variation, ..... 370
Number of Positive Differences; Annual Variation, ..... 371
Number of Positive Differences; Diurnal Variation, ..... 371
Mean Disturbance; Annual Variation, ..... 371
Mean Disturbance; Diurnal Variation of Positive and Negative Sums, ..... 371
Mean Disturbance; Diurnal Variation of Mean, ..... 372
Mean Disturbance; Diurnal Variation of Positive and Negative Means, ..... 372
Number of Positive Disturbances; Annual Variation, ..... 372
Number of Positive Disturbances; Diurnal Variation, ..... 372
Note on the least probable Error of an Observation, ..... 373

*Results for the Vertical Component of Magnetic Force—*

Secular Change, ..... 374
Annual Period, ..... 374
Differences of the Daily Means from the Monthly Means, ..... 374
Variations with reference to the Positions of the Moon, ..... 375
Diurnal Ranges; Annual Variation, ..... 376
Diurnal Ranges with reference to the Positions of the Moon, ..... 377
Diurnal Variation of the Vertical Component, ..... 379
Ranges of the Mean Diurnal Variation, ..... 381
Variation with reference to the Moon's Hour-Angle, ..... 382
Intermittent Disturbances; effect on the Yearly Mean, ..... 384
Intermittent Disturbances; effect on the Monthly Means, ..... 384
Intermittent Disturbances; effect on the Hourly Means, ..... 384
Mean Difference of a Single Observation from the Monthly Mean; Annual Variation, ..... 385
Mean Difference of a Single Observation from the Monthly Mean with reference to the Positions of the Moon, ..... 386

PAGE

Mean Difference of a Single Observation from the Monthly Mean; Diurnal Variation, ..... 387
Number of Positive Differences; Annual Variation, ..... 388
Number of Positive Differences; Diurnal Variation, ..... 388
Mean Disturbance; Annual Variation, ..... 388
Mean Disturbance; Diurnal Variation of the Positive and Negative Sums, ..... 388
Mean Disturbance; Diurnal Variation of the Positive and Negative Means, ..... 389
Mean Disturbance; Diurnal Variation of the Means, ..... 389
Number of Positive Disturbances; Annual Variation, ..... 389
Number of Positive Disturbances; Diurnal Variation, ..... 389
Note on the least probable Error of an Observation, ..... 389

*Results for the Magnetic Dip—*

Secular Change, ..... 390
Annual Period, ..... 390
Variations with reference to the Moon's Positions, ..... 391
Diurnal Variation, ..... 392
Ranges of the Mean Diurnal Variations, ..... 392
Variation with reference to the Moon's Hour-Angle, ..... 393
Intermittent Disturbances; effect on the Yearly Mean, ..... 394
Intermittent Disturbances; effect on the Monthly Means, ..... 394
Intermittent Disturbances; effect on the Hourly Means, ..... 394

*Results for the Total Magnetic Force—*

Secular Change, ..... 395
Annual Period; with foot-note on St Helena Observations, ..... 395
Variations with reference to the Moon's Positions, ..... 396
Diurnal Variation, ..... 397
Ranges of the Mean Diurnal Variation, ..... 397
Variation with reference to the Moon's Hour-Angle, ..... 398
Intermittent Disturbances; effect on the Yearly Mean, ..... 399
Intermittent Disturbances; effect on the Monthly Means, ..... 399
Intermittent Disturbances; effect on the Hourly Means, ..... 399

*Ranges of the three Magnetometers for each Civil Week-Day in* 1844, ..... 400

*The Aurora Borealis—*

Annual Variation of Frequency, ..... 401
Monthly Variation of Frequency, ..... 402
Similarity of the laws of Magnetic Disturbance, and of frequency of the Aurora Borealis, ..... 402

ABSTRACTS OF THE RESULTS FOR THE METEOROLOGICAL OBSERVATIONS—

*Results for the Temperature of the Air—*

Annual Variation of Temperature, ..... 404
Differences of the Daily Mean Temperatures from the Monthly Means, ..... 405
Approximations to the Daily Mean Temperatures, ..... 405
Diurnal Variation of Temperature, ..... 406
Approximations to the Monthly Mean Temperatures, ..... 408
Range of Mean Diurnal Variation, ..... 409
Extreme Values and Ranges of Temperature for 1844, ..... 410

PAGE

*Results for the Temperature of Evaporation—*
Annual Variation, ..... 411
Diurnal Variation, ..... 411
Range of Mean Diurnal Variation, ..... 412

*Results for the Pressure of Aqueous Vapour—*
Annual Variation, ..... 413
Variation with reference to the Positions of the Moon ..... 414
Diurnal Variation, ..... 414
Range of Mean Diurnal Variation, ..... 416
Extreme Values and Ranges, ..... 416

*Results for the Relative Humidity—*
Annual Variation, ..... 417
Variation with reference to the Positions of the Moon, ..... 417
Diurnal Variation, ..... 418
Range of Mean Diurnal Variation, ..... 419
Extreme Values and Ranges, ..... 419

*Results for the Atmospheric Pressure—*
Annual Variation, ..... 420
Diurnal Ranges; Annual Variation, ..... 420
Diurnal Ranges with reference to the Positions of the Moon, ..... 421
Diurnal Variation of Atmospheric Pressure, ..... 422
Range of Mean Diurnal Variation, ..... 423
Extreme Values and Ranges, ..... 424

*Results for the Pressure of Dry Air—*
Annual Variation, ..... 424
Diurnal Variation, ..... 424

*Results for the Pressure of the Wind—*
Annual Variation of the Maximum Pressures, ..... 426
Annual Variation of the Mean Pressures, ..... 427
Variation with reference to the Moon's Positions, ..... 427
Daily Maximum Pressure, ..... 428
Diurnal Variation of the Maximum and Mean Pressures, ..... 430
Annual Variation of the Number of Times which the Wind blew in 1844, ..... 431
Annual Variation of the Number of Points of the Compass in which the Wind blew, 431
Annual Variation of the Mean Pressure of Wind while blowing, ..... 434
Annual Variation of the Resultant Pressure of Wind, ..... 435
Diurnal Variation of the Number of Times which the Wind blew, ..... 435
Diurnal Variation of the Number of Points of the Compass in which the Wind blew, 435
Diurnal Variation of the Mean Pressure of Wind while blowing, ..... 435
Times which the Wind blew from different Points of the Compass, ..... 438
Sums of Pressures with which the Wind blew from different Points of the Compass, 438
Mean Pressure of the Wind while blowing from different Points of the Compass, ..... 438
Diurnal Variation of the Resultant Pressure of Wind, ..... 438
Diurnal Variation of the Direction of the Resultant Pressure of Wind, ..... 438

PAGE

*Results for the Motions of the Currents of Air—*

Differences of the Directions of the Motions of the Upper and Lower Currents of Air, ..... 440

*Results for the Extent of Clouded Sky—*

Annual Variation of the Extent of Clouded Sky, ..... 442
Variation with reference to the Positions of the Moon, ..... 443
Diurnal Variation, ..... 444
Ranges of the Diurnal Variation, ..... 445

*Results for the Quantity of Rain—*

Annual Variation, ..... 446
Greatest Falls in 24 hours, &c., ..... 446
Amount of Rain with reference to the Moon's Age, ..... 447

Plan of the Observatory, and projected observations at the end of the volume, see Introduction, p. lxvi., No. 116.

## ERRATA IN THIS VOLUME OF OBSERVATIONS FOR 1844.

Introduction, page xxi., line 4, *for* $\phi = 0{\cdot}0012$ *read* $\phi = 0{\cdot}00212$
Page 3, $8^d\ 3^h$, column "Declination," *for* 28·18 *read* 21·46
— 3, $10^d\ 4^h$, column "Declination," *for* 28·13 *read* 22·08
— 3, $10^d\ 11^h$, column "Balance Corrected," *for* 807·3 *read* 755·7
— 9, $10^d\ 12^h$, column "Balance Corrected," *for* 785·1 *read* 685·1
— 12, $28^d\ 16^h$, column "Balance Corrected," *for* 667·4 *read* 617·4
— 13, $4^d\ 7^h$, column "Balance Corrected," *for* 882·3 *read* 782·3
— 18, $29^d\ 13^h$, column "Balance Corrected," *for* 379·4 *read* 419·1
— 18, $30^d\ 6^h$, column "Balance Corrected," *for* 748·3 *read* 848·3
— 28, $22^d\ 27^h$, column "Balance Corrected," *for* 574·3 *read* 524·3
— 32, $16^d\ 20^h$, column "Bifilar Corrected," *for* 528·5 *read* 518·5
— 41, $1^d\ 5^h$, column "Bifilar Corrected," *for* 519·9 *read* 619·9
— 50, $19^d\ 2^h$, column "Balance Corrected," *for* 037·5 *read* 637·5
— 54, $10^d\ 11^h$, column "Bifilar Corrected," *for* 336·1 *read* 536·1
— 54, $13^d\ 23^h$, column "Bifilar Corrected," *for* 228·0 *read* 528·0
— 56, $20^d\ 19^h$, column "Balance Corrected," *for* 338·4 *read* 438·4
— 66, $14^d\ 8^h$, column "Balance Corrected," *for* 649·5 *read* 749·5
— 73, $12^h\ 55^m$, column "Bifilar Corrected," *for* 529·9 *read* 520·9
— 86, $21^h\ 30^m$, column "Balance Corrected," *for* 509·3 *read* 609·3
— 95, $10^d\ 8^h\ 0^m$, column "Declination," *for* 24·1 *read* 24·19
— 107, $4^d\ 10^h\ 22^m$, column "Balance Corrected," *for* 676·6 *read* 576·6
— 124, $25^d\ 7^h\ 15^m$, column "Bifilar Corrected," *for* 694·3 *read* 594·3
— 127, $22^d\ 9^h\ 0^m$, column "Declination," *for* 09·29 *read* 08·29
— 164, foot-note, *for* Nov. $20^d$ *read* Nov. $22^d\ 0^h$
— 187, $11^d\ 23^h$, column "Diff.," *for* 1·9 *read* 2·9
— 191, $20^d\ 21^h$, column "Diff.," *for* 0·6 *read* .....
— 201, $18^d\ 9^h$, column "Diff.," *for* 0·8 *read* 0·7
— 214, $22^d\ 11^h$, column "Wet," *for* 2·0 *read* 42·0
— 222, $14^d\ 2^h$, column "Diff.," *for* 5·2 *read* 6·2
— 233, $12^d\ 22^h$, column "Diff.," *for* 0·3 *read* 1·3
— 238, $26^d\ 13^h$, column "Barometer," *for* 39·672 *read* 29·672
— 240, $2^d\ 11^h$, column "Dry," *for* 42·0 *read* 52·0
— 253, $5^d\ 6^h$, column "Wet," *for* 57·0 *read* 57·6
— 254, $6^d\ 16^h$, column "Barometer," *for* 29·880 *read* 28·880
— 298, $4^d\ 19^h$, column "Dry," *for* 35·3 *read* 25·3
— 310, April $2^d$, column "Min.," *for* 30·4 *read* 40·4
— 311, September $15^d$, column "Min.," *for* 57·9 *read* 52·0?
— 311, December $15^d$, column "Max.," *for* ..... *read* 36·6?
— 356, line 8, *for* 0·003605 *read* 0·003905
— 376, Table XL., October $13^d$, *for* 0196 *read* [0196]

## ERRATA IN THE VOLUME OF OBSERVATIONS FOR 1843.

Introduction, 1843, page xxvi., line 13, *for* $1 + k$ *read* $1 - k$
——— — 17, *for* observation *read* vibration
——— — 22, *for* $1 + k$ *read* $1 - k$
page xxxvi., line 4, *for* cot $\theta$ *read* tan $\theta$
page lxv., line 22, *for* 2 and 3 *read* xxxvi. and xxxvii.
Page 31, $14^h\ 0^m$, column "Bifilar Corrected," *for* 557·2 *read* 537·2
— 41, $9^h\ 0^m$, column "Balance Corrected," *for* 80·63 *read* 806·3
— 44, $18^h\ 10^m$, column "Declination," *for* 15·54 *read* 17·56
— 44, $19^h\ 5^m$, column "Bifilar Corrected," *for* 815·1 *read* 515·1
— 46, $14^h\ 30^m$, column "Bifilar Corrected," *for* 217·2 *read* 517·2
— 67, July $25^d\ 10^h\ 23^m$, column "Balance Corrected," *for* 826·6 *read* 626·6
— 73, second column of Göttingen mean time, *for* Dec. $28^d\ 2^h$ *read* Dec. $28^d\ 3^h$
— 82, Dec. $18^d\ 1^h\ 31^m$, column "Unifilar Reading," *for* 20·29 *read* 25·29 The quantities in the three following columns, and in the last two columns, will require equivalent corrections, but see page xxv., No. 28, Introduction for 1844.
Page 130, last line, *for* indicate *read* indication
— 146, July $21^d\ 8^h$, column "Diff.," *for* 3·1 *read* 2·9
— 151, July $31^d\ 8^h$, *for* cirri-like *read* cirri, like
— 170, Oct. $8^d\ 18^h$, column "Barometer," *for* 30·228 *read* 29·228
— 237, line 15 below Table XIII., *for* solstices *read* equinoxes
— 267, line 2 below Table VI., *for* 7°·7 *read* 78°·7
— 303, line 17 below Table XXXV., *for* monthly *read* daily

## ERRATA IN THE VOLUME OF OBSERVATIONS FOR 1841–2.

Introduction, page xi., line 6, *for* the term 1842 *read* the October term of 1842
— xxxiii., line 3 from foot, *for* 23 *read* 13
— xli., line 10, column "$-Q$," *for* 0·000342 *read* 0·000298
— xli., line 6 from foot, *for* 0·0002979 *read* 0·0002972
— xli., line 5 from foot, *for* 0·0002915 *read* 0·0002922
— xlvi, heading of Table 22, *for* 23 *read* 21
Page 34, $11^h\ 12^m$, column "Balance Corrected," *for* 560·0 *read* 860·0
— 149, line 10 below Table XIX., *for* $2^h$ *read* $23^h$
— 158, Table II., head of 5th column, *for* $3^h$ *read* $5^h$

# INTRODUCTION.

## Position and Description of the Observatory.

1. The Magnetical and Meteorological Observatory at Makerstoun, in Roxburghshire, was erected by General Sir Thomas Makdougall Brisbane, Bart., in the year 1841. The geographical co-ordinates are as follow :—

| | |
|---|---|
| Latitude, . . . . . | 55° 34′ 45″ N.* |
| Longitude, . . . . . | $0^h$ $10^m$ $3{\cdot}5^s$ W. of Greenwich.† |

Height of the barometer cistern above mean water at Berwick, 213 feet.‡

2. The Magnetical Observatory is situate nearly on the summit of a ridge, which occupies the left or northern bank of the Tweed, being 540 feet distant from, and 80 feet above, that river. The Astronomical Observatory is upon the highest part of the ridge, 140 feet due west of the Magnetic Observatory. A fair horizon is seen from the Observatory hill, being bounded about 10 miles to the east by a slightly-swelling ground, which, to the east-south-east, seems to join the Cheviot Hills. The view is bounded about a mile to south and south-west by a ridge, forming the right bank of the Tweed; about 500 feet to the south-west and north-west by masses of trees in the Makerstoun grounds;§ and from 1 to 3 miles to north-west, north, and

* Ast. Nach., vol. x., p. 214.

† Deduced from the longitude of the Astronomical Observatory, Mem. Roy. Ast. Soc., vol. xi., p. 171.

‡ Obtained from levels for a railway, and from barometric comparisons.—See Makerstoun Observations for 1843, Introduction, p. ix.

§ The above view, taken from a point about fifty yards to the NE. of the Magnetic Observatory, shews the trees in the grounds at their most unfavourable elevation.

north-east, by an elevated ridge, which forms, to some extent, the northern boundary of the valley of the Tweed. From north, by the east, to the south, the elevation of the horizon, with a slight exception, is under 2°; from the north to the north-west, increasing from 2° to 4°; from the north-west to the south-west, the tops of the trees are elevated from 5° to 8°; and from the south-west to the south the elevation is under 4°. The highest point of the Cheviots, which is 2656 feet above the level of the sea, is about 18 miles to the east-south-east; it is occasionally referred to in the meteorological remarks on clouds.

3. The Observatory hill, it is believed, is composed of felspathic trap. The Tweed, immediately to the south, and for a mile to the east and west, flows more or less through this rock, which does not appear upon any part of the hill. The opening for a foundation to the Observatory shewed only masses of rolled pebbles, and boulders of greywacke and trap.

4. The Observatory is rectangular in its plan, 40 feet by 20 feet internally. It is formed of wood; copper nails were used; and iron carefully excluded from every part of the structure. The pillars for the magnetometers and telescopes are of stone, from 22 inches to 19 inches in diameter, and are placed upon excellent stone foundations, completely unconnected with the floor, and every part of the building. By a reference to the plan and elevation, the following details will be understood. (Plate I.)

There are two windows to the south, with the door between; and three to the north, which open like folding doors. The dimensions of the principal apartment are, 40 feet long, 12 feet broad, and 12 feet high. The two ante-rooms are each 15 feet long, 7½ feet broad, and 12 feet high. The instruments are indicated in the plan as follow:—D, the Declinometer, *t*, its Reading Telescope; A, the Azimuth Circle and Transit; H, the Bifilar or Horizontal Force Magnetometer, *t'*, its Reading Telescope, P, a Pillar for a Collimator (not used); V, the Balance or Vertical Force Magnetometer; I, Pillar for the Inclinometer (not used here); B, the Standard Barometer; W, the Anemometer; W', the Wind-Vane Dial-Plate; T, the Thermometer Case; C, the Mean Time Clock; S, the Copper Stove (removed Nov. $4^d$ $23^h$, 1844); *n s*, the Astronomical Meridian; D *t*, the Magnetical Meridian. The vane farthest to the right in the elevation, Plate I., belongs to the anemometer; the others give the direction of the wind.

## SYSTEM OF OBSERVATION, AND STAFF OF OBSERVERS.

5. In the beginning of 1843, the number of daily observations was increased to nine, at two-hourly intervals, commencing with $18^h$ Göttingen mean time ($5^h$ $10^m$ A.M. Makerstoun mean time); these, together with all the other daily observations, were made by Mr WELSH and myself. In the end of 1843, I recommended to Sir THOMAS BRISBANE to add Mr ALEXANDER HOGG, who had been previously employed in the term-day observations, to the establishment, for the purpose of obtaining a complete

diurnal series of observations. Sir THOMAS, with his usual anxiety to render the Observatory in every respect useful to science, at once complied with my recommendation; and, in the beginning of the year 1844, hourly observations were commenced, which were continued till the end of the year 1845. The whole staff of observers, after the commencement of 1844, therefore, consisted of Mr JOHN WELSH, Mr ALEXANDER HOGG, and myself; Mr DODS assisting in the term-day observations, and on a few occasions during disturbances.

## DECLINOMETER.

6. The declination magnetometer was obtained from GRUBB of Dublin. The magnet *a* is 15 inches long, $\frac{7}{8}$ inch broad, and $\frac{1}{4}$ inch thick; it fits into a stirrup *b*,

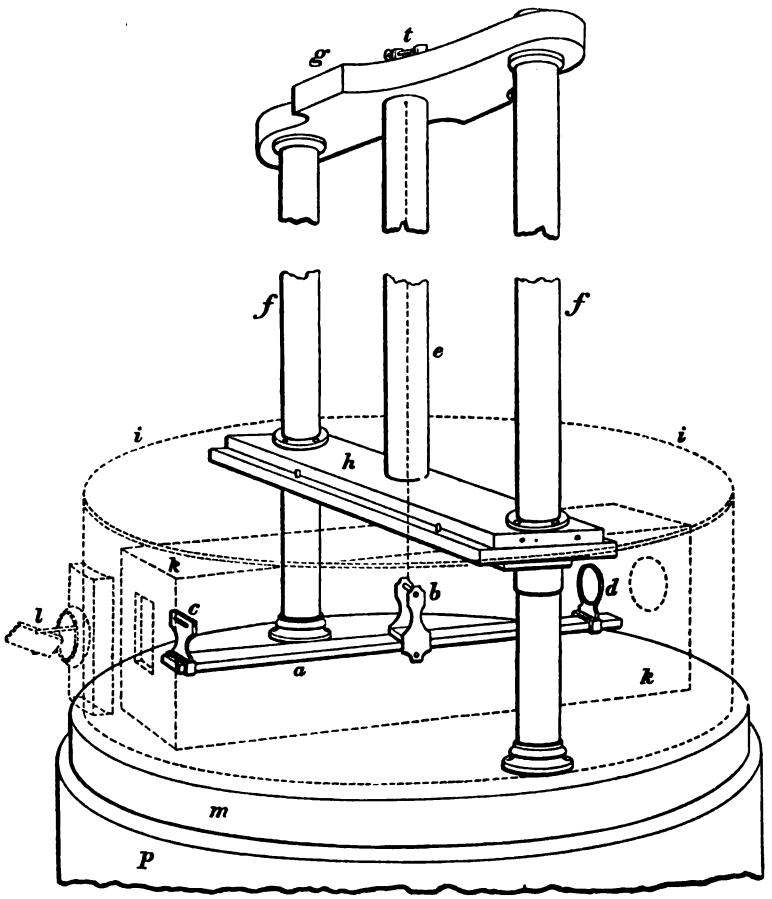


whose two eyes receive an axle to which the suspension thread is attached; near the north extremity it carries a scale divided on glass, *c*; near the other, at a distance from the scale of about 12 inches, the focal length, it carries a lens of $1\frac{1}{4}$ inch diameter, *d*. A marble slab *m*, cemented to the top of the stone pillar *p*, carries two copper tubes *ff*, 35 inches long, which are connected at the top by a mahogany tie *g*, bearing the torsion-circle and suspension apparatus *t*, and, about 7 inches

from the slab, by another wooden cross-piece *h*, which supports a glass tube *e* enclosing the suspension thread. The magnet is enclosed by a rectangular wooden box *k*, formed of two pieces fitting into each other in the middle by a groove and tongue, glazed at the extremities, and having only a small aperture in the centre for the suspension thread: this box also enclosed a copper ring for checking the vibrations of the magnet; it was removed October 15, 1844, and is not shewn in the figure: a cylindrical wooden drum *i*, together with two lids (not shewn in the figure), fitting by pegs upon the cross-piece *h*, enclose the box and magnet. There are two glazed apertures also in the wooden drum, opposite those in the rectangular box; one to the north, where a small mirror *l* throws light upon the glass scale; the other to the south, between the lens and reading telescope. All the joints of the boxes, including those in contact with the marble slab, are covered with velvet, and both boxes are pressed firmly against the marble slab by means of leaden weights, which were previously determined to have no effect upon the position of the magnet. In order to destroy any effect of radiation, both boxes were covered with gilt paper, externally and internally. The suspension apparatus is covered by a wooden cap (not shewn in the figure). In order to prevent the variation of humidity within the boxes as much as possible, the whole apparatus was covered, February 14, 1844, by a thick double cotton hood, tied round the stone pillar, and having only small openings at the glazed apertures of the boxes. The reading telescope is fixed to a stone pillar; the object glass is 8 feet to the magnetic south of the magnet lens.

7. The pillar of the azimuth circle, used for determinations of the absolute declination, is between the pillars of the magnetometer and its reading telescope. This theodolite is by TROUGHTON; the circle is 15 inches in diameter, is divided to 5 minutes, and is read to 5 seconds with three verniers. The lines of collimation of the theodolite and reading telescopes coincide when the middle wire of the former is seen, in either telescope, coinciding with the vertical wire of the latter. The circle is retained in the same position on its pillar, but the transit telescope is removed, excepting when required for observations of absolute declination.

8. The following are the data used in reducing the observations of the declinometer:—

Values of the declinometer scale divisions in angular measure.

The adopted mean value of one division of the long scale of 500 divisions = 0′·6725*

During the observations of absolute horizontal intensity, the magnet with the long scale, usually in the declination box, was removed to the unifilar box in the intensity house, and a magnet with a short scale was substituted.

The adopted mean value of one division of the short scale of 300 divisions = 0′·7500*

* For details, see Introduction to the Observations for 1843, pp. xiii. and xiv.

From the adopted values of the long and short scale divisions, the coefficient for reducing the divisions of the short scale to the same value as the divisions of the long scale = 1·115; the reciprocal = 0·897.

Scale readings at the magnetic axes of the declinometer magnets, the copper ring or damper being in its place.

The reading for the magnet with the long scale at the magnetic axis = 257·14
..... short scale ..... = 147·11*

The copper ring used for checking the vibrations of the magnet was removed October 15$^d$ 4$^h$—5$^h$, 1844, as it was found to have an effect upon the magnet, varying with its position.

The adopted zeros of the declinometer scales are as follow :—

| | |
|---|---|
| Reading of the long scale at the magnetic axis, . . . . . | 257·14 |
| Correction for the effect of the bifilar and balance magnets, . . . | + 0·16 |
| Correction for the effect of the copper ring, Jan. 1$^d$ —Oct. 6$^d$ 23$^h$, 1844, | − 1·00 |
| ..... Oct. 7$^d$ 0$^h$—Oct. 15$^d$ 4$^h$, 1844, | − 1·70† |
| Jan. 1$^d$ —Oct. 6$^d$ 23$^h$, 1844. Adopted zero for the long scale, . | 256·30 |
| Oct. 7$^d$ 0$^h$—Oct. 15$^d$ 4$^h$, 1844. ..... . | 255·60 |
| Oct. 15$^d$ 5$^h$, 1844, and afterwards. ..... . | 257·30 |
| Reading of the short scale at the magnetic axis, . . . . . | 147·11 |
| Correction for the effect of the bifilar and balance magnets, . . . | + 0·14 |
| Correction for the effect of the copper ring, Jan. 1$^d$—Oct. 7$^d$, 1844, . | − 0·90† |
| Jan. 1$^d$—Oct. 7$^d$, 1844. Adopted zero for the short scale, . . . | 146·35 |
| Oct. 7$^d$, 1844, and afterwards. ..... . . . | 147·25 |

9. The determinations for the effects of the different magnets upon each other are given in the previous volumes. The plate-glass in the declinometer boxes was found to have no effect upon the reading of the magnet: the effect of the copper ring is allowed for above. The determinations of the corrections are given in the volume for 1843.

10. Correction for the torsion force of the suspension thread.

The errors due to the torsion force of the suspension thread are produced, first, by the magnet moving out of the plane of detorsion; secondly, by the variation of this plane (due generally to the varying humidity of the atmosphere). The error due to the former, even in the most marked cases, is less than the probable error of

* For details, see Introduction to the Observations for 1843, pp. xv. and xvi.

† Ibid., pp. xvii. and xxi.

the observations, and it is altogether inappreciable, compared with the error due to the second.

If the plane of detorsion be that of the magnetic meridian, and the magnet be deflected through an arc $u$ by turning the arms of the torsion circle $w$, the torsion is $w-u$, and the equation of equilibrium is

$$m \text{ X } u = (w-u) \text{ H}$$

where $m$ is the magnetic moment of the bar, X is the horizontal component of the earth's magnetic force, and H is the torsion force for an arc equal to radius, whence, if $m$ X = F,

$$\frac{u}{w-u} = \frac{\text{H}}{\text{F}} = \Phi$$

is the quantity by which the deviations of the magnet from the plane of detorsion should be multiplied to obtain the decrements due to torsion. If $n$ be the observed deviation, $\Phi\, n$ = the true deviation. The following are observations for the value of $\Phi$ for the suspension thread placed in the instrument, June 22, 1843, and for the long scale magnet:—

Aug. $7^{d}$ $2^{h}$, 1843. $\text{Arc}^{-1}\, w = \begin{cases} +90^\circ \\ -90^\circ \end{cases}$; $\text{arc}^{-1}\, u = \begin{cases} 7'\cdot97 \\ 7'\cdot90 \end{cases}$; mean value of $\Phi$ = 0·00147.

Dec. $26^{d}$ $23^{h}$, 1844. $\text{Arc}^{-1}\, w = \begin{cases} +90^\circ \\ -90^\circ \end{cases}$; $\text{arc}^{-1}\, u = \begin{cases} 7'\cdot47 \\ 7'\cdot59 \end{cases}$; mean value of $\Phi$ = 0·00140.

These values have not been used for this correction; the last determination has been employed in the observations of absolute horizontal intensity made in 1844.

11. The second and most important error due to the torsion force is that produced by the variation of the plane of detorsion. Unless when the period and extent of change is known, this can only be corrected by removing it; this is done occasionally in the following manner:—The magnet, with its stirrup, being removed, a brass bar and stirrup of nearly the same weight and dimensions is suspended; the rectangular box being removed, the cylindrical box being completely closed, and the shutters removed from the glazed lid, the extremities of the arc of vibration are observed through the latter; the marble slab beneath having radii drawn for every 5° on each side of the magnetic meridian, the positions of rest at the extremities of the arcs are estimated to $\frac{1}{2}$°; the deviation of the mean position from the magnetic meridian is known, and the arms of the torsion circle are turned through an equal angle in the opposite direction; the position of rest is then in the magnetic meridian. Much time and care were bestowed upon these observations, as the error due to this cause is by far the most serious that occurs in connection with the declinometer.

12. The following are all the observations for the elimination of torsion made in 1844, together with all the occasions on which the magnet was touched or removed from its box. When the mean position of rest for the north end of the brass bar was found to the east of the magnetic north, the torsion existing is considered positive, and the effect of $+10°$ of torsion $= -0'\cdot84$ (from the previous observation for the value of $\frac{H}{F}$.) In the first case below, the north end of the brass bar was found to rest 2° east of the magnetic north; and the brass bar was thereafter made to coincide with the magnetic meridian.

Jan. $1^d$ $3^h$—$4^h$. Torsion removed, $+2°$. Jan. $12^d$ $2^h$—$3^h$. Torsion removed, $-1\frac{1}{2}°$.

Jan. $26^d$ $21^h$—$27^d$ $7^h$. The magnet with the short scale was used in the declinometer box.

Jan. $27^d$ $2^h$—$3^h$. Torsion removed, 0°. Feb. $13^d$ $2^h$—$3^h$. Torsion removed, $+2°$.

Feb. $17^d$ $0^h$—$7^h$. Short scale magnet in the declinometer box and deflection bar vibrated.

Feb. $23^d$ $3^h$—$4^h$. Torsion removed, $+1\frac{1}{2}°$. March $22^d$ $23^h$—$0^h$. Torsion removed, 0°. Afterwards, the short scale magnet was placed in the box, and the deflection bar vibrated.

March $27^d$ $4^h$—$5^h$. Torsion removed, $+3°$. The suspension thread was found to have stretched a little, it was now wound up two-tenths of an inch, and the torsion again removed as follows:—March $27^d$ $4^h$—$5^h$. Torsion removed, $+9\frac{1}{2}°$. April $5^d$ $4^h$—$5^h$. Torsion removed, $-3\frac{1}{2}°$. May $28^d$ $0^h$—$1^h$. Torsion removed, 0°. May $28^d$ $1^h$—$29^d$ $9^h$. Short scale magnet used in the declinometer box, and after $29^d$ $9^h$, the deflecting bar was vibrated, for the intensity observation, in the declinometer box; afterwards, the torsion was removed as follows:—

May $29^d$ $23^h$—$0^h$. Torsion removed, $+8\frac{1}{2}°$. Aug. $4^d$ $22^h$—$23^h$. Torsion removed, $+1°$. Aug. $4^d$ $23^h$—$5^d$ $6^h$. Short scale magnet used in the declinometer box, and the deflection bar vibrated.

Oct. $6^d$ $19^h$—$20^h$. Torsion removed, $-10\frac{1}{2}°$. This observation was made rather hurriedly, as the hour of observation was approaching: it was conceived that the true amount of torsion might have been less. Oct. $6^d$—$7^d$. Experiments were made to determine the effect of the copper ring on the declination magnet.* Oct $15^d$ $4^h$. Other observations were made for the effect of the copper ring, after which the use of the copper ring was discontinued. Oct. $15^d$ $23^h$—$16^d$ $4^h$. Observations were made to determine the zero point of the declination scale; the amount of torsion was then determined as follows:—

Oct. $16^d$ $4^h$—$5^h$. Torsion removed, $+9\frac{1}{2}°$. The amount of torsion found is nearly the same in amount as that found Oct. $6^d$, but opposite in sign. Nov. $4^d$—$6^d$. The

* See Introduction, 1843, pp. xvii. and xviii.

Observatory was washed and cleaned. The vapour produced during the washing, it is conceived, may have affected the suspension thread as found Nov. $11^d$.

Nov. $11^d$ $23^h$—$0^h$. Torsion removed, $+8\frac{1}{2}°$. Dec. $25^d$ $23^h$—$0^h$. Torsion removed, $-6\frac{1}{2}°$. Dec. $26^d$ $0^h$—$4^h$. Short scale magnet used in the declinometer, and deflecting bar vibrated: at $22^h$, observations were made for the value of the torsion coefficient of the suspension thread. Upon removing the short scale magnet after Dec. $26^d$ $4^h$, the fibres of the suspension thread became loose, when it is probable that the torsion found at $23^h$ was introduced.

Dec. $26^d$ $23^h$—$0^h$. Torsion removed, $+55°$. Dec. $29^d$ $23^h$. Torsion removed, $0°$.

Dec. $30^d$ $0^h$—$3^h$. Short scale magnet used in the declinometer box, and deflecting bar vibrated, after which the torsion was removed as follows:—

Dec. $30^d$ $3^h$—$4^h$. Torsion removed, $-14°$.

13. The times of vibration of the declination magnets are as follow:—

The time of one vibration of the declination long scale magnet $= 17{\cdot}8^{s}$*
..... short scale ..... $= 17{\cdot}0$

14. The observations of the declinometer were made in the following manner:— The points of the scale which coincided with the vertical wire of the reading telescope were noted 18 seconds before the minute of observation, at the minute, and 18 seconds after the minute: the scale readings at these periods being $a$, $b$, and $c$, the mean position is deduced by the formula $\frac{a+2b+c}{4}$. This method was employed till Oct. 15, 1844, when the copper ring for checking the vibrations having been removed, the three scale readings afterwards were always made at the extremities of the arcs of vibration; the first reading being made at that extremity of the vibration which occurred between 27 seconds and 9 seconds before the minute of observation. Even after the copper ring was removed, the arc of vibration was small, seldom above 3′, and generally less than 2′; during disturbances, however, the arc is often considerable, and frequently in these cases only two observations are made, the mean position being obtained at once from the mean of the two readings at the extremities of the vibration which occur between $18^s$ and $0^s$ before, and between $0^s$ and $18^s$ after, the minute of observation.

15. All the observations of declination in this volume are absolute. They are rendered so as follows:—

The middle wire of the theodolite telescope is brought to coincide with the vertical wire of the fixed reading telescope (7.); the three verniers of the horizontal circle are then read; the theodolite telescope is turned (on the vertical axis of the circle) until its middle wire coincides with the vertical line on the north meridian

* See Introduction, 1843, p. xxi.

mark of Sir THOMAS BRISBANE'S (the western) transit in the Astronomical Observatory, and the verniers are again read. In order to obtain the reading of the horizontal circle for the astronomical meridian, the theodolite telescope was placed as nearly as possible in the meridian, and being accurately levelled, the time of the sun's transit was observed by the Magnetic Observatory clock. The sun's meridian passage was also observed by Sir THOMAS BRISBANE with his western transit in the Astronomical Observatory, and the clocks in the two observatories being immediately compared, the true time of transit by the clock in the Magnetic Observatory was obtained. The difference, if any, between the true and observed times, was due to error of azimuth; the latter, being very small, was obtained from the former in multiplying by the factor,

$$\frac{\text{cosine sun's declination}}{\text{cosine sun's altitude}}.$$

16. If A′ be the difference of the horizontal circle readings for the wire of the fixed telescope and for the north mark, Z be the azimuth of the north mark, and D be the angle at any instant contained by the line of collimation of the reading telescope and the adopted zero scale reading, the true westerly declination at that time will be

$$180° - A' + Z \pm D.$$

The values of $180° - A' = A$, obtained in 1844, 1845, and 1846, are given in the following Table :—

TABLE 1.—Determinations of the Value of Angle A.

| Date. | Readings of Horizontal Circle | | | | | | | Angle A. |
|---|---|---|---|---|---|---|---|---|
| | For Wire of Declination Telescope. | | | | For North Mark. | | | |
| | Verniers | | | Mean. | Verniers | | | Mean. | |
| | A. | B. | C. | | A. | B. | C. | | |
| 1844. | ′ ″ | ′ ″ | ′ ″ | ° ′ ″ | ′ ″ | ′ ″ | ′ ″ | ° ′ ″ | ° ′ ″ |
| Feb. 7 | 53 17·5 | 53 21·5 | 53 57·5 | 233 53 32·2 | 44 12·5 | 43 52·5 | 43 57·5 | 77 44 0·8 | 23 50 28·6 |
| May 11 | 52 2·5 | 51 52·5 | 52 8·7 | 53 52 1·2 | 42 2·5 | 42 22·5 | 42 42·5 | 257 42 22·5 | 23 50 21·3 |
| July 4 | 52 23·0 | 52 8·0 | 52 43·0 | 53 52 24·7 | 42 35·0 | 42 52·5 | 43 10·0 | 257 42 52·5 | 23 50 27·8 |
| July 22 | 52 10·0 | 52 0·0 | 52 25·0 | 53 52 11·7 | 42 27·5 | 42 51·2 | 43 2·5 | 257 42 47·1 | 23 50 35·4 |
| Aug. 14 | 52 40·0 | 52 18·7 | 52 46·2 | 53 52 35·0 | 42 40·0 | 43 0·0 | 43 20·0 | 257 43 0·0 | 23 50 25·0 |
| Aug. 14 | 52 35·0 | 52 7·5 | 52 47·5 | 53 52 30·0 | 42 40·0 | 43 1·2 | 43 25·0 | 257 43 2·1 | 23 50 32·1 |
| Aug. 14 | 53 15·0 | 52 57·5 | 53 20·0 | 53 53 10·8 | 43 23·7 | 43 52·5 | 44 5·0 | 257 43 47·1 | 23 50 36·3 |
| Aug. 14 | 52 55·0 | 52 51·2 | 53 37·5 | 233 53 7·9 | 43 15·0 | 43 2·5 | 43 10·0 | 77 43 9·2 | 23 50 1·3 |
| Aug. 14 | 53 5·0 | 52 54·0 | 53 17·5 | 53 53 5·5 | 43 22·5 | 43 51·0 | 44 2·5 | 257 43 45·3 | 23 50 39·8 |
| Oct. 14 | 52 25·0 | 52 28·7 | 53 15·0 | 233 52 42·9 | 43 10·0 | 42 47·5 | 43 5·0 | 77 43 0·8 | 23 50 17·9 |
| Oct. 14 | 52 27·5 | 52 28·7 | 53 12·5 | 233 52 42·9 | 43 7·5 | 42 40·0 | 42 57·5 | 77 42 55·0 | 23 50 12·1 |
| Oct. 14 | 52 38·7 | 52 17·5 | 53 0·0 | 53 52 38·7 | 42 37·5 | 42 57·5 | 43 25·0 | 257 43 0·0 | 23 50 21·3 |
| Oct. 14 | 52 46·2 | 52 22·5 | 52 58·8 | 53 52 42·5 | 42 43·7 | 43 0·0 | 43 25·0 | 257 43 2·9 | 23 50 20·4 |
| Oct. 19 | 52 11·2 | 52 13·7 | 52 58·8 | 233 52 27·9 | 42 57·5 | 42 36·2 | 42 55·0 | 77 42 49·6 | 23 50 21·7 |
| Oct. 19 | 52 32·5 | 52 7·5 | 52 43·6 | 53 52 27·9 | 42 52·5 | 42 56·2 | 43 16·3 | 257 53 1·7 | 23 50 23·8 |
| Oct. 19 | 52 45·0 | 52 16·2 | 52 52·5 | 53 52 37·9 | 42 40·0 | 42 57·5 | 43 25·0 | 257 43 0·8 | 23 50 22·9 |
| Oct. 19 | 52 41·2 | 52 35·0 | 53 20·0 | 233 52 52·1 | 43 25·0 | 42 57·5 | 43 10·0 | 77 43 10·8 | 23 50 18·7 |
| Dec. 31 | 52 43·7 | 52 22·5 | 52 52·5 | 53 52 39·6 | 42 52·5 | 43 13·7 | 43 35·0 | 257 43 13·7 | 23 50 34·1 |
| Dec. 31 | 52 17·5 | 52 20·0 | 53 5·0 | 233 52 34·2 | 43 12·5 | 42 47·5 | 43 3·7 | 77 43 1·2 | 23 50 27·0 |
| 1845. | | | | | | | | | |
| Jan. 17 | 52 13·7 | 52 18·8 | 52 55·0 | 233 52 29·2 | 42 52·5 | 42 35·0 | 42 52·5 | 77 42 46·7 | 23 50 17·5 |
| Jan. 17 | 52 15·0 | 52 18·7 | 52 59·0 | 233 52 30·9 | 42 58·1 | 42 35·0 | 42 53·7 | 77 42 48·9 | 23 50 18·0 |
| Jan. 17 | 52 42·5 | 52 20·0 | 52 57·5 | 53 52 40·0 | 42 55·0 | 43 17·5 | 43 37·5 | 257 43 16·7 | 23 50 36·7 |
| Jan. 17 | 52 8·7 | 52 10·0 | 52 52·5 | 233 52 23·4 | 43 0·0 | 42 40·0 | 42 57·5 | 77 42 52·5 | 23 50 29·1 |
| Jan. 17 | 52 25·0 | 52 2·5 | 52 37·5 | 233 52 21·7 | 42 25·0 | 42 42·5 | 43 2·5 | 77 42 43·3 | 23 50 21·6 |
| Jan. 17 | 52 23·7 | 52 2·5 | 52 43·1 | 53 52 23·1 | 42 38·7 | 42 55·0 | 43 15·5 | 257 42 56·4 | 23 50 33·3 |
| May 8 | 52 7·5 | 52 5·0 | 52 57·5 | 233 52 23·3 | 43 7·5 | 42 42·5 | 43 10·0 | 77 43 0·0 | 23 50 36·7 |
| 1846. | | | | | | | | | |
| Apr. 13 | 48 5·0 | 47 43·7 | 47 32·5 | 53 47 47·1 | 37 57·5 | 38 20·0 | 38 2·5 | 257 38 6·7 | 23 50 19·6 |
| Apr. 13 | 47 28·7 | 47 8·8 | 47 32·5 | 233 47 23·3 | 38 12·5 | 37 40·0 | 37 25·0 | 77 37 35·8 | 23 50 12·5 |
| May 7 | 48 5·0 | 47 33·7 | 47 27·5 | 53 47 42·1 | 38 2·5 | 38 22·5 | 38 5·0 | 257 38 10·0 | 23 50 27·9 |
| May 9 | 47 53·7 | 47 41·2 | 48 5·0 | 233 47 53·3 | 38 43·7 | 38 5·0 | 37 45·0 | 77 38 11·2 | 23 50 17·9 |
| May 9 | 48 17·5 | 47 20·0 | 47 20·0 | 53 47 39·2 | 37 55·0 | 38 10·0 | 37 57·5 | 257 38 0·8 | 23 50 21·6 |

17. The mean value of angle A from all the observations in 1844, 1845, and 1846, . . . . . $=23^\circ\ 50'\ 24''\cdot5$

The mean value of angle A from all the observations in 1844, . . . . . $=23^\circ\ 50'\ 23''\cdot9$

The value of angle Z (Table 8, Introduction, 1841–2), $= 1^\circ\ 37'\ 38''\cdot8$

Whence angle A + Z, . . . . . $=25^\circ\ 28'\ 2''\cdot7$

The absolute westerly declination, therefore, corresponding to the zeros of the scales, No. 8, $=25^\circ\ 28'\cdot04$. This value has also been employed for the observations in 1845 and 1846. For other scale readings differing from the zero by the angular quantity $\pm$ D, the declination is obtained from the formula, declination $= 25^\circ\ 28'\cdot04 \pm$ D.

## UNIFILAR MAGNETOMETER AND OBSERVATIONS OF THE ABSOLUTE HORIZONTAL INTENSITY OF THE EARTH'S MAGNETISM.

18. In the beginning of April 1843 two small wooden houses were erected about 19 yards to the north of the Magnetic Observatory; the larger of the houses contains the unifilar magnetometer and the dip circle, and the smaller, which is 10 feet to SSE. of the larger, contains a reading telescope for the magnetometer.

The unifilar magnetometer rests on a strongly-braced wooden stand, which is fixed by copper battens and plaster of paris to a stone slab, resting on a stone foundation separated from the floor; the top block of the stand, a solid piece of mahogany, carries a vertical box enclosing the suspension thread and supporting the torsion circle, this box is open on two opposite sides near the stand top; a horizontal box slides on the vertical one, and when close to the stand top the magnet is completely enclosed; an internal box was afterwards added, and all the precautions already indicated (6.) for the declinometer were taken. The magnet used when observations of absolute horizontal intensity were made was that usually in the declinometer, a spare magnet being fitted with a short scale (8.) was substituted for it; the telescope (that intended for a collimator to the bifilar) was placed in the smaller wooden house, on a stand in all respects similar to that for the unifilar: the two houses were connected, during observations, in the line of collimation of the telescope and magnet by a wooden tube blackened within. A beam of straight well-seasoned fir, 11 feet long, $3\frac{3}{4}$ inches broad, and $1\frac{3}{4}$ inches thick, was placed on each side (outside) of the larger wooden house, in the line passing through the centre of the suspended magnet, and at right angles to the magnetic meridian; each beam was let into the tops of two strongly-braced wooden trestles, 7 feet apart, which rested on wooden posts driven into the ground, and which were fixed to the latter by catch-pins, allowing a slight adjustment for the distance of the beams from the magnet; the trestles and beams being removed after each observation. The beams were carefully divided with the aid of a brass standard yard made by Messrs TROUGHTON and SIMMS; the graduations were adjusted to their distance from the suspended magnet in the following manner:—a well-seasoned fir rod, shod with brass at one extremity, and terminated at the other by a capstan-headed screw, by which the rod was accurately adjusted to a length of six feet, was passed through holes in the sides of the wooden house and unifilar box; the middle of the rod coinciding with the suspension thread, the catch pins of the trestles were then loosened or forced in till the extremities of the six-feet rod coincided accurately with the division 3 feet on each beam. The deflecting magnet was adjusted to the graduations on the beams with the aid of a lens; in 1844 the graduations were marked on brass pin-heads placed in the beams. The fixidity of the trestles was verified in general after each observation, and the accuracy of the graduations on the beams was verified usually before each observation.

19. The value of the absolute horizontal intensity is determined from the observations as follows :—If $r$ be the distance from the centre of the suspended magnet, at which the centre of the deflecting bar is placed on the wooden beam, its axis being in the line at right angles to the magnetic meridian passing through the centre of the suspended magnet; and if $u$ be the resulting angle, through which the suspended magnet is deflected, then since, by GAUSS's theory, the ratio of the magnetic moment $m$ of the deflecting bar to X, the horizontal component of the earth's magnetic force, is given by the following formula

$$\frac{m}{X}=\frac{1}{2}r^3 \tan u \frac{1}{1+\frac{p}{r^2}+\frac{q}{r^4}+\text{\&c.}}$$

where $p$ and $q$ are quantities depending on the mode of distribution of the magnetism in the magnetic bars, the value of the ratio may be determined from observations at three distances; it is probable, however, that the deflections are too small in the observations for 1844 to render the consideration of the quantity $q$ of importance: the values of the ratio have in consequence been determined from observations at two distances; if these be $r$ and $r'$, and the corresponding deflections be $u$ and $u'$, then

$$\frac{m}{X}=\frac{r'^5 \tan u' - r^5 \tan u}{2\,(r'^2-r^2)}$$

tan $u$ being obtained from the formula

$$\tan u=\tan\left[\frac{a}{4}\left\{(\overline{u_1+{}_1u}-\overline{u_0+{}_0u})-f(\overline{d_1+{}_1d}-\overline{d_0+{}_0d})\right\}(1+\Phi)\right]\cdot\frac{1+k\,(b_d-b_v)}{1-q\,(t_d-t_v)}$$

where $a$ is the angular value of one division of the long scale, $f$ is the coefficient for reducing the divisions of the short scale to the value of divisions of the long scale; $u_1$ and ${}_1u$ are the observed mean scale readings of the unifilar magnetometer, the deflecting bar, with its north pole towards the east, being at a given distance to the east and west respectively of the suspended magnet; similarly, $u_0$ and ${}_0u$ are the mean scale readings when the deflecting bar, at the same distance, has its north pole towards the west: $d_1$, ${}_1d$, &c., are the simultaneous mean scale readings of the declinometer corresponding to $u_1$, ${}_1u$, &c.: $1+\Phi$ is the torsion factor. [The quantity within brackets is given for each distance, pages 166 and 167, in the column, Deflection corrected for Torsion.] The last factor reduces the value of the tangent to the value of X and $m$ at the time of vibration, $k$ being the coefficient for reducing the scale divisions of the bifilar magnetometer to parts of horizontal force, $b_d$ and $b_v$ are the mean scale readings of the bifilar at the times of deflection and vibration respectively; $q$ is the temperature coefficient for the deflecting bar, $t_d$ and $t_v$ are the mean temperatures of the bar during deflection and vibration respectively.

The values of log $\frac{1}{2}r^3 \tan u$ are given for each distance, pages 166 and 167.

20. The following are the values of the constants used in the previous formula:—

$a = 40''\cdot35$ (No. 8.) $f = 1\cdot115$ (No. 8.) $q = 0\cdot000288$.*
Aug. 10—Nov. 9, 1843, $k = 0\cdot00013$. Nov. 9, 1843—Dec. 31, 1845, $k = 0\cdot00014$.
For the thread in the unifilar box and long scale magnet, $\Phi = 0\cdot0012$.

21. The comparative observations for $u$ and $d$ were rendered simultaneous thus: The times of vibration of the unifilar and declination magnets being nearly the same, the time at which the unifilar magnet attained one extremity of its arc of vibration was instantly indicated by me to Mr WELSH, who could observe my motions through one of the north windows of the Observatory. He immediately commenced counting the beats of the mean time clock, and at the end of the 18th second (the time of one vibration) both observers commenced making readings of the magnetometers; those by Mr WELSH being made at the end of the 18th, 36th, 54th, &c., seconds, and those by myself at the extremities of the arcs of vibration. From 7 to 12 consecutive readings were made thus at every position of the deflecting bar, and from these the mean readings are deduced. In order to render the arcs of vibration of the unifilar as small as possible, the deflecting bar was at first moved gradually up to its nearest distance (5 feet); in placing it at the next distance, it was moved rapidly *nearly* half way, and 18 seconds counted, when it was immediately shifted the other half. When the farthest distance was attained, it was placed vertically, and after 18 seconds, laid down in the reverse position; it was then moved as before, by half-shifts, to its next position, and so up to the nearest. After comparative readings for that position, the magnet was again placed vertically, and carried to the beam on the opposite side of the suspended magnet; at the end of 36 seconds it was laid down at the same distance, and with the north pole in the same direction as before. In general, the vibrations were small, seldom above 10′; when larger, the magnet was checked by slightly approaching or removing the deflecting bar at proper times, with reference to the directions in which the suspended magnet was moving. Mr WELSH observed the bifilar magnetometer before and after each comparison, and after each comparison I observed the temperature of the deflecting bar by means of a thermometer lying beside it.

22. The value of the product $m$ X is obtained from the formula

$$m\,\mathrm{X} = \frac{\mathrm{K}\,\pi^2}{\mathrm{T}^2}$$

where $\pi$ is the ratio of the circumference to the diameter, T is the *true* time of one vibration of the deflecting bar deduced from the *observed* time T′ by the formula

$$\mathrm{T} = \mathrm{T}'\left(1 - \frac{a\,a'}{16}\right)(1+\Phi)^{\frac{1}{2}}\left(1 - \frac{s}{86400}\right)$$

where $a$ and $a'$ are the semiarcs of vibration in parts of radius at commencement

* See Introduction, 1843, p. xliii.

and termination. $\Phi$ is the ratio of the torsion force to the horizontal component of magnetic force for the declinometer thread with the deflecting bar suspended, $s$ is the daily rate of the clock in seconds, K is the moment of inertia of the deflecting bar obtained from the formula

$$K = \tfrac{1}{2}\,(r_i^2 + r_e^2)\,M \cdot \frac{T_0^2}{T_0^2 - T_1^2}$$

where $r_i$ and $r_e$ are the internal and external radii of a regular metallic ring, M is the mass of the ring in grains, $T_0$ is the *true* time of one vibration without the ring (obtained by the above formula for T), $T_1$ is the *true* time of one vibration with the ring placed horizontally on the magnet, and is obtained from the observed time $T_1'$ by the formula

$$T_1 = T_1'\left(1 - \frac{a\,a'}{16}\right)(1 + \Phi)^{\frac{1}{2}}\left(1 - \frac{s}{86400}\right)\left\{1 + k\,(b_0 - b_1) - q\,(t_0 - t_1)\right\}$$

where the symbols in the first four factors have the same meaning as given above for T, it being remembered that $\Phi$ is the ratio of the torsion force to the horizontal force for the declinometer thread when carrying *both* the deflecting bar and ring. The last factor contains the reduction of the time of vibration to the value of the horizontal component for which $T_0$ was the time of vibration without the ring; $k$, therefore, is the bifilar coefficient, given previously, $b_0$ and $b_1$ are the mean bifilar readings when the times of vibration $T_0$ and $T_1$ were observed, $q$ is the temperature coefficient for the deflecting bar, given above, $t_0$ and $t_1$ are the mean temperatures of the bar corresponding to the observations $T_0$ and $T_1$. As the observations for deflection are corrected for temperature to the temperature at the time of vibration, the value of $m$ at the time of vibration is taken as the standard value for the series, as far as temperature is concerned, but it requires a correction for the inductive action of the earth, due to the position of the magnet during vibration in the plane of maximum magnetic force; during deflections the magnet is placed at right angles to the magnetic meridian, and is therefore unaffected by induction: the first equation, No. 22, therefore becomes

$$m\,X = \frac{K\,\pi^2}{T^2\left(1 + \frac{\delta\,m}{m}\right)}$$

$\frac{\delta\,m}{m}$ is the induction coefficient, and is obtained from the formula

$$\frac{\delta\,m}{m} = \frac{n + s - 2\,b}{n - s}$$

where $n$ and $s$ are the mean scale readings of the bifilar magnetometer when the deflecting bar is placed in the magnetic meridian with its north end towards the

north and south respectively, its centre being in the prolongation of the bifilar magnet, $b$ is the bifilar reading with the deflecting bar away.

The deflecting bar was vibrated in the declinometer box after the observations of deflection; it was suspended in a stirrup of silk fibres of the same thickness as the suspension thread, and a small thread of paper being gummed to the extremity next the reading telescope, the times of transits of the paper at the wire of the reading telescope towards right and left were observed for every 5 vibrations each way up to the 96th vibration. (See Tables, pages 168 and 169.) A moveable object-glass fits upon the object-glass of the reading telescope, in order to bring the paper slip into view without altering the adjustment of the telescope.

23. The following are the values of the constants used in the preceding formulæ. $\Phi$ for the declinometer thread, with the deflecting bar suspended, is obtained from the value when the long scale magnet is suspended by multiplying the latter by the ratio of the moments of the two magnets; thus, moment of long scale magnet is to moment of deflecting bar, as 1·000 is to 0·942, whence, from the values of $\Phi$ for the long scale magnet (No. 10), we have for the deflecting bar and declinometer thread,

Aug. 11—Dec. 18, 1843, $\Phi = 0{\cdot}001556$. During 1844, $\Phi = 0{\cdot}001482$.

The rate of the Observatory clock was generally less then 2 seconds a-day. No correction for rate was therefore employed in the determination of T.

24. The following are the details for the determination of K.

The deflecting bar is 1·25 feet ($= a$) in length; 0·0719 feet ($= b$) in breadth; 6216·7 grains in weight ($=$ W). The value of K had been previously determined from the formula $\frac{a^2 + b^2}{12} \times$ W. In January 1848, it was thought desirable to determine it by the more accurate formula given previously; as it was doubtful whether the declinometer thread could sustain the deflecting bar and an additional weight, a stronger thread was substituted, for which $\Phi$ was determined.

The deflecting bar was vibrated in a stirrup of silk without any appendages, the results are:

Jan. 11$^d$ 1848. Observations made by chronometer, DENT, No. 1665, rate $-5^s{\cdot}0$.
Semiarcs of vibration, arc$^{-1}$ $\alpha = 10\frac{1}{2}°$ arc$^{-1}$ $\alpha' = 6°$. Temperature of bar 38°·4 Fahr.
Mean observed time of one vibration from 160 vibrations, $T_0' = 15^s{\cdot}9037$.
Bifilar magnetometer observed every $5^m$ during vibration, mean during vibration corrected for temperature $= 553{\cdot}9$ sc. div.
Deflecting bar with scale and lens suspended in a stirrup of silk as during vibration $\Phi = 0{\cdot}00200$.
Deflecting bar with scale and lens suspended in brass stirrup, $\Phi = 0{\cdot}00193$.
The true value of one vibration, $T_0 = 15^s{\cdot}9014$.

The deflecting bar having been placed in a stirrup of silk fibres, of the thick-

ness of the suspension thread, it was vibrated with the vertical circle of the inclinometer balanced horizontally upon it; the results are:

Internal radius of ring = 0·39541 feet. External radius of ring = 0·43779 feet.
Weight of ring = 9628·6 grains.
Semiarcs of vibration, $\text{arc}^{-1}\,\alpha = 12°$, $\text{arc}^{-1}\,\alpha' = 7\frac{3}{4}°$, temperature of bar = 38°·0 Fahr.
Rate of chronometer, DENT, No. 1665, $s = -5^s{\cdot}0$.
Mean observed time of one vibration from 120 vibrations, $T_1' = 27^s{\cdot}8006$.
Bifilar magnetometer, observed every $5^m$ during vibration; mean during vibration corrected for temperature = 569·3 sc. div.
Deflecting bar with scale and lens suspended in brass stirrup $\Phi = 0{\cdot}003966$.

As all the observations for the time of vibration of the deflecting bar had been made previously with the bar suspended in a stirrup of silk fibres, in order to employ the second formula for K, given above, depending on the dimensions and weight of the bar, it was necessary in the present case, to determine the value of K for the same mode of suspension. The two values of $\Phi$ given above for the bar suspended in a brass and in a silk fibre stirrup, *without* the ring, give $\Phi$ with brass stirrup suspension, to $\Phi$ with silk stirrup suspension, as, 193 : 200, whence, from the value of $\Phi$ above for brass stirrup suspension and magnet *with* the ring, = 0·003966, we find $\Phi$ for silk stirrup suspension and magnet with ring = 0·004109.

Since $b_0 - b_1 = -15{\cdot}4$ sc. div., $k = 0{\cdot}000135$, $t_0 - t_1 = +0°{\cdot}4$, $q = 0{\cdot}000288$.
The true time of one vibration with the ring (reduced to the value of X for $T_0$) $T_1 = 27^s{\cdot}8403$.

25. From the above, therefore, we find for the deflecting bar without appendages,

$$\text{Log } K_0 = 2{\cdot}9091359 \text{ at the temperature of } 38°{\cdot}4 \text{ Fahr.}$$

The value of K used in the reductions in the present volume has been obtained from $K_0$ by the formula

$$K = K_0\,\{1 + e\,(t_v - 38)\}^2$$

where $e$ is the dilatation of steel for 1° Fahr. = 0·0000068, and $t_v$ is the temperature of the bar during vibration.

From the formula $K = \frac{a^2 + b^2}{12}\,W$, log K = 2·9096331.

26. The following are the observations for the value of the induction coefficient $\frac{\delta\,m}{m}$. Nov 15, 1847. A strong wooden beam having been fixed horizontally in the prolongation of the magnetic axis of the bifilar magnet which lies at right angles to the magnetic meridian, the deflecting bar was mounted in a wooden block having a groove cut to contain the bar; when the deflecting bar was in its place, it was in the same horizontal plane with, its axis was at right angles to, and its centre was in the prolongation of, the axis of the bifilar magnet. The block was fixed to the

wooden beam: the deflecting bar when removed and replaced, was carried with a thick cloth glove or silk handkerchief, to prevent variation of temperature in handling. In reversing the magnet, the same side was always kept next the bifilar magnet.*

TABLE 2.—Determination of the Induction Coefficient for the large Deflecting Bar.

| Göttingen Mean Time. | | | Position of Deflector. | Bifilar Reading. | Interpolated Reading, Deflector Away. | Deflection. | Sum of Deflections. | Difference of Deflections. | Value of $\frac{\delta m}{m}$ |
|---|---|---|---|---|---|---|---|---|---|
| d. | h. | m. | | Sc. Div. | Sc. Div. | Sc. Div. | Sc. Div. | Sc. Div. | |
| 1847. | | | | | | | | | |
| Nov. 5 | 0 | 11 | Away | 157·12 | | | | | |
| | | 15 | N. Pole S. | 265·35 | 156·05 | 109·30 | 221·70 | 3·10 | 0·0140 |
| | | 19 | N. Pole N. | 42·57 | 154·97 | 112·40 | | | |
| | | 23 | Away | 153·90 | | | | | |
| | 0 | 24 | Away | 154·22 | | | | | |
| | | 27½ | N. Pole S. | 263·60 | 154·95 | 108·65 | 220·65 | 3·35 | 0·0152 |
| | | 30 | N. Pole N. | 43·47 | 155·47 | 112·00 | | | |
| | | 33 | Away | 156·10 | | | | | |
| | 0 | 36 | Away | 156·75 | | | | | |
| | | 40¾ | N. Pole S. | 266·90 | 157·32 | 109·58 | 220·55 | 1·39 | 0·0063 |
| | | 44 | N. Pole N. | 46·75 | 157·72 | 110·97 | | | |
| | | 48 | Away | 158·20 | | | | | |
| Nov. 6 | 1 | 12 | Away | 150·50 | | | | | |
| | | 15 | N. Pole S. | 259·12 | 150·42 | 108·70 | 219·48 | 2·08 | 0·0095 |
| | | 18 | N. Pole N. | 39·57 | 150·35 | 110·78 | | | |
| | | 21 | Away | 150·27 | | | | | |
| | 1 | 23 | Away | 150·75 | | | | | |
| | | 26 | N. Pole S. | 259·46 | 150·97 | 108·49 | 220·00 | 3·02 | 0·0138 |
| | | 29 | N. Pole N. | 39·67 | 151·18 | 111·51 | | | |
| | | 33 | Away | 151·47 | | | | | |
| | 1 | 34 | Away | 151·27 | | | | | |
| | | 37 | N. Pole S. | 261·10 | 151·44 | 109·66 | 220·66 | 1·34 | 0·0061 |
| | | 40 | N. Pole N. | 40·60 | 151·60 | 111·00 | | | |
| | | 43 | Away | 151·77 | | | | | |
| | 1 | 45 | Away | 152·17 | | | | | |
| | | 48 | N. Pole S. | 260·97 | 151·98 | 108·99 | 220·87 | 2·89 | 0·0131 |
| | | 50 | N. Pole N. | 39·97 | 151·85 | 111·88 | | | |
| | | 54 | Away | 151·60 | | | | | |

27. The adopted value of $\frac{\delta m}{m} = 0{\cdot}0112$.

This value is very large, more than twice as great as that obtained for small 4-inch bars, and is evidently not to be neglected in the rudest mode of observation for the horizontal intensity.

28. In consequence of the more accurate determination of the value of K, the moment of inertia of the deflecting bar, and of $k$ the bifilar coefficient, and on account of

* It will in general be preferable to place the deflecting bar to the east or west (as in the present observations), rather than to the north or south of the bifilar magnet, since I have found that the centre of figure may differ considerably from the centre of magnetism; perhaps, for the same reason, when observations are made only on one side of the bifilar magnet, the deflecting bar should be inverted when it is reversed, since the magnetic axis may be nearer one side of the bar than the other.

the omission of the correction for the induction coefficient, the observations for 1843 have been recomputed by the formulæ given in the preceding pages; the results will be found in the following Table. The value of X from each pair of deflections is reduced to the mean bifilar reading for the year. The bifilar was adjusted in the year 1843, and the reduction of the bifilar scale readings for 1843 (column 6, Table 3) to the mean for the year was made as follows:—$f$ being the value of the bifilar reading (column 6) obtained by the formulæ after Table VIII., p. 230, 1843; 0·002618 being the mean for 1843 obtained from line 7, p. 231, 1843; and 1·316 (see No. 40) being the factor for reducing the quantities, Table VIII., p. 229, 230, 1843, to their true values; the reduction of X (column 5, Table 3) to the mean for 1843

$$= 1 + 1{\cdot}316\,(f - 0{\cdot}002618)$$

The reduction of X for 1844 is made by the factor

$$1 + 0{\cdot}000135\,(b - 527{\cdot}9)$$

$b$ being the bifilar reading column 6 for 1844, and 527·9 being the mean bifilar reading for 1844.

TABLE 3.—Results of the Observations for the Absolute Horizontal Intensity, in 1843 and 1844.

| Date. | Pairs of Distances. | Log $\frac{m}{X}$ | Log $m$ X. | X. | Bifilar Reading. | X Reduced to Mean Bifilar. | Mean of Group. | Weight. |
|---|---|---|---|---|---|---|---|---|
| 1843. | Feet. Feet. | | | | Sc. div. | | | |
| Aug. 11 | 5·0 and 6·5 | 0·465366 | 1·517261 | 3·3570 | 511·5 | 3·3526 | 3·3512 | 1 |
| | 5·5 — 6·5 | 0·466084 | | 3·3542 | | 3·3498 | | |
| Aug. 21 | 5·0 — 6·5 | 0·461487 | 1·519634 | 3·3812 | 511·1 | 3·3770 | | |
| | 5·5 — 7·0 | 0·460922 | | 3·3834 | | 3·3792 | | |
| | 5·5 — 7·5 | 0·461249 | | 3·3821 | | 3·3779 | | |
| | 6·0 — 8·0 | 0·457371 | | 3·3973 | | 3·3930 | 3·3807 | 3 |
| | 6·5 — 8·5 | 0·459456 | | 3·3891 | | 3·3849 | | |
| | 7·0 — 9·0 | 0·462511 | | 3·3772 | | 3·3730 | | |
| | 7·0 — 9·5 | 0·460677 | | 3·3844 | | 3·3801 | | |
| Nov. 8 | 5·0 — 6·0 | 0·464232 | 1·520430 | 3·3736 | 510·9 | 3·3695 | | |
| | 5·0 — 6·5 | 0·463155 | | 3·3778 | | 3·3737 | 3·3732 | 3 |
| | 5·25 — 7·0 | 0·462200 | | 3·3815 | | 3·3774 | | |
| | 5·5 — 7·5 | 0·463487 | | 3·3765 | | 3·3724 | | |
| Nov. 14 | 5·125 — 6·75 | 0·457337 | 1·515526 | 3·3814 | 507·6 | 3·3779 | 3·3757 | 2 |
| | 5·25 — 7·0 | 0·458435 | | 3·3771 | | 3·3736 | | |
| Dec. 18 | 5·0 — 6·625 | 0·456307 | 1·516321 | 3·3885 | 515·2 | 3·3858 | 3·3813 | 2 |
| | 5·25 — 7·0 | 0·458598 | | 3·3796 | | 3·3769 | | |
| 1844. | | | | | | | | |
| Feb. 17 | 5·0 — 6·75 | 0·458660 | 1·517407 | 3·3836 | 524·6 | 3·3851 | 3·3851 | 1 |
| Mar. 23 | 5·125 — 6·75 | 0·459748 | 1·515895 | 3·3734 | 520·8 | 3·3768 | 3·3793 | 2 |
| | 5·5 — 7·25 | 0·458444 | | 3·3785 | | 3·3819 | | |
| May 29 | 5·125 — 6·75 | 0·450795 | 1·510367 | 3·3868 | 535·7 | 3·3831 | 3·3816 | 2 |
| | 5·5 — 7·25 | 0·451555 | | 3·3838 | | 3·3801 | | |
| Aug. 5 | 5·125 — 6·75 | 0·451689 | 1·512270 | 3·3907 | 540·7 | 3·3846 | 3·3852 | 2 |
| | 5·25 — 6·875 | 0·451379 | | 3·3919 | | 3·3858 | | |
| Dec. 26 | 5·08$\dot{3}$ — 9·708$\dot{3}$ | 0·457975 | 1·516858 | 3·3841 | 539·5 | 3·3786 | | |
| | 5·25 — 9·83 | 0·458462 | | 3·3822 | | 3·3767 | 3·3789 | 2 |
| | 5·5 —10·25 | 0·457238 | | 3·3870 | | 3·3815 | | |
| Dec. 30 | 5·08$\dot{3}$ — 9·708$\dot{3}$ | 0·459337 | 1·516483 | 3·3773 | 534·9 | 3·3740 | 3·3727 | 2 |
| | 5·25 — 9·83$\dot{3}$ | 0·459976 | | 3·3748 | | 3·3715 | | |

29. Giving the means of groups, column 8, the weights in column 9, we find

| | |
|---|---|
| Mean value of X for 1843 reduced to mean bifilar reading for 1843, | =3·3752 |
| ..... for 1844 ..... 1844, | =3·3801 |
| These give the secular change from 1843 to 1844 in parts of X, | =0·00145 |
| The secular change from the bifilar magnetometer, p. 356, | =0·00389 |

From the observations, therefore, of the absolute value of X it would appear that the secular change indicated by the bifilar magnetometer from 1843 to 1844 is too great.

## BIFILAR OR HORIZONTAL FORCE MAGNETOMETER.

30. This instrument was made by GRUBB of Dublin, and is similar in its general construction to the declinometer, having two boxes, gilt internally and externally as

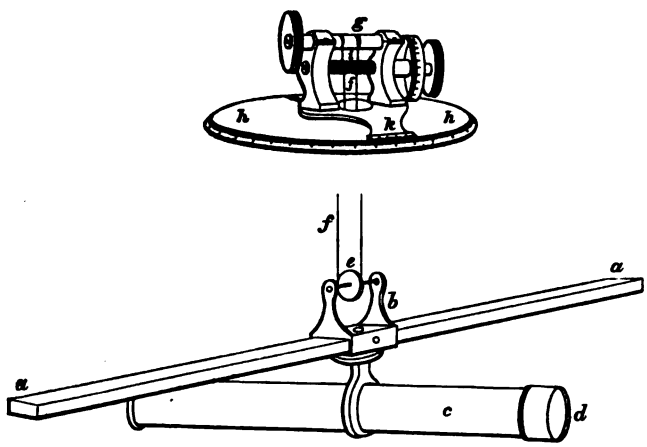


in the latter instrument. The magnet *a a*, whose dimensions are 15 inches, $\frac{7}{8}$ inch, and $\frac{1}{4}$ inch, is placed in a stirrup *b*, which carries below it a tube *c*, having a lens *d* at the extremity next the reading telescope, and a glass scale at the other : the scale has 280 divisions, and the graduation at the 300th division ; increasing readings of the scale indicate increasing magnetic force ; the axle of a grooved wheel *e* fits into the suspension eyes of the stirrup *b* ; the magnet, with these appendages, is borne by a silver wire *f*, passing round the grooved wheel, and having its two extremities pegged into a suspension roller *g* : the roller is supported by the torsion circle *h*, which also bears, beneath the roller, a micrometer-headed screw *i*, right-handed where it meets one extremity of the wire, left-handed where it meets the other. The screw serves to render the distance of the extremities of the wire equal to the diameter of the grooved wheel ; the screw and suspension roller turn with the verniers *k*. A copper ring encircles the magnet, in order to check the vibrations. A thermometer by ADIE and SON is enclosed by a glass tube passing through both boxes, the stem

of the thermometer, with the graduations, being above the lid of the outer box; the bulb of the thermometer rests in a cup, formed in a brass bar of the same dimensions as the bifilar magnet; the brass bar is supported on a wooden stand, and lies parallel to the magnet; the bulb of the thermometer is also covered loosely by a small brass cap. It was found from comparative observations (p. xxx., Introduction, 1843) that a thermometer, with its bulb free, would differ 1° from the thermometer resting in the brass bar in the course of a daily change of 10° of temperature. The whole instrument was covered with a double thick cotton cover Jan. $31^d\ 6^h$ 1844. The reading telescope is fixed to a stone pier, 8 feet south of the magnet.

31. In the adjustment of the instrument, the magnet is forced to a position at right angles to the magnetic meridian, by turning the arms of the torsion circle. As, in forcing the magnet from the meridian, the upper extremities of the wire will move through a greater angle than the lower extremities, the wires will be no longer vertical, and the magnet and appendages will be raised; the forces producing equilibrium will, therefore, be the weight suspended endeavouring to attain the lowest point, and the horizontal component of the earth's magnetic intensity acting on the free magnetism of the bar.

32. If $v$ be the excess of the angular motion of the arms of the torsion circle, or upper extremities of the wire, over $u$, that of the lower extremity or magnetic bar in moving the latter from the meridian, the equation of equilibrium will be

$$m\,\mathrm{X}\sin u = \mathrm{W}\frac{a^2}{l}\sin v$$

$m$, X, W, $a$, and $l$ being respectively the magnetic moment of the bar, the horizontal component of the earth's magnetic force, the weight suspended, the interval, and the length of the wires. The differential of this equation ($u = 90°$) divided by it, gives

$$\frac{\Delta\,\mathrm{X}}{\mathrm{X}} = n\,a\cot v + t\,(\mathrm{Q} + 2\,e - e')$$

$n$ being the number of scale divisions from the zero, or scale reading when $u = 90°$, $a$ the arc value in parts of radius of one scale division, $t$ the number of degrees Fahrenheit which the temperature of the magnet is above the adopted zero, Q the coefficient of the temperature correction for the varying magnetic moment of the bar or the value of $\frac{\Delta\,m}{m}$ for 1° Fahr., $e$ and $e'$ the coefficients of expansion for the brass of the grooved wheel and silver of the wires.

33. It is assumed, in the previous investigation, that the suspending wire does not act by any inherent elastic force; that the torsion force depends wholly on the length and interval of the two portions of the wire and the angle of twist: it seems extremely probable that this condition will not be rigorously sustained, and it is very possible that there may be considerable twist in the suspending wire or thread;

for this reason, the following methods, which are independent of the angle of torsion, were employed to determine the coefficient :—

34. If the equation of equilibrium for the bifilar magnet at right angles to the magnetic meridian be

$$m\,\mathrm{X}=\mathrm{F}, \quad . \quad . \quad . \quad . \quad . \quad . \quad . \quad . \quad . \quad . \quad (1.)$$

and if a magnet whose magnetic moment is M be placed with its axis in the magnetic meridian passing through the centre of the bifilar bar, the centres of the two bars being at a distance $r$, and the resulting angle of deflection be $n$ scale divisions $=\Delta v$, the equation of equilibrium will be

$$m\left\{\mathrm{X}+\frac{2\,\mathrm{M}}{r^3}\left(1+\frac{p}{r^2}+\frac{q}{r^4}\right)\right\}\cos\Delta v=\mathrm{F}'.$$

For a value of the earth's horizontal force $\mathrm{X}+\Delta\mathrm{X}$, which would alone have produced the deviation $\Delta v$, we have

$$m\left(\mathrm{X}+\Delta\mathrm{X}\right)\cos\Delta v=\mathrm{F}';$$

whence

$$\frac{\Delta\mathrm{X}}{\mathrm{X}}=\frac{2\,\mathrm{M}}{\mathrm{X}}\left(\frac{1}{r^3}+\frac{p}{r^5}+\frac{q}{r^7}\right) \quad . \quad . \quad . \quad . \quad . \quad . \quad (2.)$$

If the deflecting bar be now employed to deflect a freely-suspended unifilar magnet, in order to determine the value of $\frac{\mathrm{M}}{\mathrm{X}}$, as in the ordinary observations for absolute horizontal intensity ; $u$ being the angle of deflection for a distance $r_1$ we have

$$\frac{2\,\mathrm{M}}{\mathrm{X}}=r_1^3\tan u\,\frac{1}{1+\frac{p_1}{r_1^2}+\frac{q_1}{r_1^4}}$$

If the bifilar and unifilar bars are of the same dimensions $p$ and $q$, which are quantities depending upon the distribution of the magnetism in the bars, may be considered equal to $p_1$ and $q_1$, and if the deflections for both bars be made at the same distances, or $r=r_1$ then

$$\frac{\Delta\mathrm{X}}{\mathrm{X}}=\tan u,$$

and

$$k=\frac{\tan u}{n} \quad . \quad . \quad . \quad . \quad . \quad . \quad . \quad . \quad . \quad (3.)$$

If, however, the bifilar and unifilar magnets are of different dimensions, the value of $\frac{2\,\mathrm{M}}{\mathrm{X}}$ should be obtained from the deflections of the unifilar at different distances, $p_1$ and $q_1$ being eliminated; that value being substituted in equation (2.), and deflections of the bifilar being obtained for different values of $r$, $p$ and $q$ also may be eliminated.

35. When the observations for 1843 were nearly through the press, observations of deflections of the bifilar magnet were made at two distances; observations of deflection of a unifilar magnet were also made; the dimensions of the bifilar and unifilar bars were very different, but, as the results for the two distances computed by equation (2.) were very nearly equal, it was considered that the differences between $p$, $q$, and $p_1$, $q_1$, might be neglected; the abstracts were accordingly formed with the aid of the coefficient so obtained. It was discovered, after the volume was published, that the difference of the distances employed was too small to exhibit the error of the assumption that $p=p_1$, &c. In consequence of this error, the coefficient has been redetermined by different methods, as follow:—

36. Wooden beams having been placed in the prolongations of the bifilar magnet, and at right angles to these, lines were drawn upon them, passing through the centre of the magnet,—one in the magnetic meridian, the other at right angles to it; several distances from the centre of the suspended magnet were marked off on each side with a beam compass; a similar structure was erected for the declinometer. The following observations were then made:—

1*st*, A cylindrical magnet, 3·65 inches long, was employed to deflect the bifilar and declinometer magnets; these two magnets are of the same dimensions, 15 inches long, and were obtained at the same time from the same maker. The short deflecting bar was placed at different distances to the east, and at the same distances to the west, of the bifilar bar, and the deflections of the bifilar were observed in scale divisions. Observations of deflection of the declinometer magnet were then obtained with the same deflector—the deflector, however, being placed at the same distances, as in the other case, to the north and south of the declinometer magnet: in both cases, the prolongation of the suspended bar, in its normal position, passes through the centre of the deflector. The results are obtained in the 1st portion of Table 4.

2*d*, The same deflecting bar was placed to the north and south of the bifilar magnet, and to the east and west of the declinometer magnet, the prolongation of the axis of the deflector in both cases passing through the centre of the suspended bar. The results are given in the 2d portion of Table 4.

3*d*, A large deflecting bar (15 inches long) was employed in the same manner as the small bar in the 1st instance.

4*th*, The large deflecting bar was employed in the same manner as the small bar in the 2d case.

In the 3d case, deflections of the bifilar could only be obtained to the E, and, in the 4th case, to the S of the bifilar magnet, owing to the proximity of the bifilar to the walls of the Observatory. It was easy, however, from the observations with the small bar to make the requisite corrections for the difference of deflection on the opposite sides: the correction is small. The results for the 3d and 4th cases are contained in the 3d and 4th portions of Table 4.

TABLE 4.—Observations of Deflection for the Determination of the Coefficient of the Bifilar Magnetometer.

| No. of Series. | Deflections of Bifilar Magnet. | | | | | Deflections of Declination Magnet. | | | | | Resulting Value of $k$. |
|---|---|---|---|---|---|---|---|---|---|---|---|
| | Date. | Distance. | Deflection. | Mean. | Therm. | Date. | Distance. | Deflection. | Mean. | Therm. | |
| | 1847. | Feet. | Sc. Div. | Sc. Div. | ° | 1847. | Feet. | Sc. Div. | ′ ″ | | |
| 1 | May 11 | 2·2 E | 133·4 | 136·0 | 53·6 | May 14 | 2·2 N | 94·30 | 62 43 | 62·6 | 0·0001345 |
| | | W | 138·5 | | | | S | 92·25 | | | |
| | May 13 | 2·7 E | 64·4 | 65·4 | 61·9 | May 14 | 2·7 N | 45·85 | 30 33 | 62·6 | 0·0001359 |
| | | W | 66·4 | | | | S | 45·00 | | | |
| | May 12 | 3·267 E | 34·3 | 34·9 | 58·5 | May 14 | 3·267 N | 24·20 | 16 6 | 62·6 | 0·0001342 |
| | | W | 35·4 | | | | S | 23·70 | | | |
| 2 | May 11 | 2·5 N | 118·4 | 119·0 | 53·9 | May 15 | 2·5 E | 81·60 | 55 9 | 60·0 | 0·0001350 |
| | | S | 119·6 | | | | W | 82·40 | | | |
| | May 13 | 3·167 N | 60·9 | 60·8 | 60·9 | May 15 | 3·167 E | 42·05 | 28 31 | 60·0 | 0·0001364 |
| | | S | 60·7 | | | | W | 42·75 | | | |
| | May 12 | 4·583 N | 21·0 | 21·0 | 56·4 | May 15 | 4·583 E | 14·34 | 9 43 | 60·0 | 0·0001346 |
| | | S | 21·0 | | | | W | 14·58 | | | |
| 3 | May 15 | 6·917 N | ..... | 119·8 | ..... | May 15 | 6·917 E | 82·56 | 55 37 | 61·5 | 0·0001351 |
| | | S | 119·8 | | | | W | 82·84 | | | |
| | May 15 | 8·209 N | ..... | 71·4 | ..... | May 15 | 8·209 E | 50·13 | 33 38 | 61·5 | 0·0001370 |
| | | S | 71·4 | | | | W | 49·88 | | | |
| 4 | May 19 | 5·5 E | 125·1 | 126·0 | 55·2 | May 15 | 5·2 N | 102·48 | 69 11 | 61·8 | 0·0001350 |
| | | W | ..... | | | | S | 103·28 | | | |
| | May 19 | 7·792 E | 42·9 | 43·0 | 55·2 | May 15 | 6·833 N | ..... | 29 45 | 61·8 | 0·0001357 |
| | | W | ..... | | | | S | 44·23 | | | |

37. *5th*, In May and August 1847, a theodolite magnetometer by Mr JONES of London was converted into a unifilar horizontal force magnetometer, the suspended bar having been deflected through an angle $(u - \delta)$ as in Dr LAMONT's method, the variations of horizontal force were deduced from the scale readings, reduced to angular measure by the formula

$$\frac{\Delta X}{X} = - \cot (u - \Delta) (\Delta u - \Delta \delta) + q (t - t_0)$$

where $u$ is the angle which the deflected magnet makes with the *astronomical* meridian (negative when to the east) and $\delta$ is the westerly declination, $\Delta u$ being the arc value of the change of reading, and $\Delta \delta$ the arc value of the simultaneous change of declination obtained from the declinometer: $q$ being the temperature coefficient of the deflecting bar ($=0{\cdot}00021$), $t_0$ the standard temperature of the deflecting bar, and $t$ the temperature of observation.

In May 1847, only three comparisons of the two instruments were obtained

during a moderate magnetic disturbance; the results are given as a specimen of the accuracy that may be expected from this method.

| Date. | Bifilar Corrected. | $u$ | $\delta$ | $(\Delta u - \Delta \delta) \times \cot 39° 40'$ | $t$ | $q(t-t_0)$ | $k$ |
|---|---|---|---|---|---|---|---|
| | Sc. Div. | ° ′ | ° ′ | | | | |
| May 7d 22h 0m | 479·9 | −14 42·88 | 25 16·82 | | 48·4 | | |
| 23 30 | 533·0 | −14 29·56 | 25 9·86 | +0·007114 | 48·7 | −0·000063 | 0·0001328 |
| 8 1 32 | 571·9 | −14 20·28 | 25 4·00 | +0·005331 | 49·1 | −0·000084 | 0·0001344 |

The mean of the two values of $k = 0·0001336$.

In August 1847, a series of comparative observations were made of the bifilar and a unifilar horizontal force magnetometer: these observations were made every hour for three days; the results were grouped so as to obtain the greatest differences of readings for comparisons; the mean angle of deflection of the unifilar $(u-\delta)$ was equal to 65°. The final result of the whole groups was, that the changes of the unifilar scale readings were to those of the bifilar scale readings as 1 to 0·974, the value of $k$ for the unifilar being 0·0001389, therefore that of $k$ for the bifilar = 0·0001353. The changes of horizontal force from which this result was deduced were small.

38. The following, then, are the values of $k$, deduced by the five different processes above:—

Short deflector, E. and W. of bifilar magnet, and N. and S. of declination magnet, $k = 0·0001349$
..... N. and S. ..... E. and W. ..... $k = 0·0001353$
Large deflector, E. ..... N. and S. ..... $k = 0·0001360$
..... S. ..... E. and W. ..... $k = 0·0001353$
Comparisons of unifilar and bifilar horizontal force magnetometers, $k = 0·0001353$

The mean of all the results gives $k = 0·0001354$

The adopted value of $k = 0·000135$

39. The value of the coefficient deduced from the angle of torsion of the suspending wire is

$$1847. \quad k = a \cot v = 0·00032675 \times \cot 69°·3' = 0·0001251.$$

The ratio of the true value of $k$ to that determined by the angle of torsion $= \frac{135}{125} = 1·08$.

40. The true values of $k$ from 1841, obtained from the formula $1·08 \times a \cot v$ are given below:—

| | | | | | | | |
|---|---|---|---|---|---|---|---|
| July | 11d | 20h | 1841—July | 23d | 5h | 1841, | $k = 0·000128$ |
| Aug. | 4 | 20 | 1841—Sept. | 7 | 5 | 1841, | $k = 0·000164$ |
| Sept. | 7 | 20 | 1841—Sept. | 30 | 5 | 1841, | $k = 0·000158$ |
| Oct. | 6 | 20 | 1841—Oct. | 19 | 28 | 1841, | $k = 0·000141$ |
| Oct. | 19 | 23 | 1841—April | 27 | 4 | 1843, | $k = 0·000135$ |
| April | 28 | 2 | 1843—Nov. | 8 | 22 | 1843, | $k = 0·000130$ |
| Nov. | 10 | 8 | 1843—Dec. | 31 | 12 | 1844, | $k = 0·000140$ |

In order to reduce the variations of the horizontal component given, pages 229 to 238, in the volume for 1843, to their true values in parts of the whole horizontal component, they must be multiplied by the factor 1·316.

41. The bifilar magnet was adjusted November $10^d$ 1843, when the angle $v$ was found = 68° 18′, the bifilar scale reading 173. The angle $v$ remained unaltered, excepting for short periods during disturbances, till January 1, 1846.

42. During considerable disturbances the collimator scale, which contains too small an angle, goes out of the field of the reading telescope, it was found necessary in these cases to turn the arms of the torsion circle until it reappeared; afterwards the arms of the torsion circle were turned to their original position: experiments were made in the end of 1842, during periods of slight change, which shewed, after turning the arms of the torsion circle a few degrees in either direction, that on recurring to the original value of $v$, the scale readings were unaltered. If $\beta$ be the small angle through which the arms of the torsion circle are turned, $n$ be the scale reading *minus* 170 (the adopted scale zero), then N, the number of scale divisions from the zero (corrected for temperature) for the same force when $\beta = 0$, is obtained from the formula,*

$$N = \frac{2 \sin \frac{\beta}{2}}{a \cos v} \cos\left(v + \frac{\beta}{2}\right) + n \frac{\cos (v+\beta)}{\cos v} + t\,q'$$

$$= \quad A \quad + n\,B \quad + t\,q'$$

$\beta$ is considered negative when $v$ is diminished, $n$ is negative when the reading is below the zero (170), $t$ is the temperature of the magnet minus 26°, and $q'$ is the temperature coefficient in scale divisions.

43. The arms of the torsion circle were turned during the disturbance, November 16, 1844,† as follows:

| | | | Sc. Div. | |
|---|---|---|---|---|
| Nov. $16^d\ 6^h\ 20^m$— $37^m$ | $\beta = +1°\ 8'$ | A = + | 59·0 | B = 0·950 |
| $16^h\ 6^h\ 38^m$— $45^m$ | $\beta = +2°\ 43'$ | A = + | 136·4 | B = 0·880 |
| $16^d\ 6^h\ 46^m$—$17^d\ 3^h$ | $\beta = +1°\ 13'{\cdot}5$ | A = + | 63·7 | B = 0·946 |

$17^d\ 3^h$. The arms of the torsion circle were turned to their original position.

44. The mean time of one vibration of the bifilar magnet, is between $26^s$ and $27^s$: the natural arc of vibration is generally very small, and when considerable, the time of vibration was found less than from large artificial vibrations.‡ $25^s$ has been used in the observations for 1844.

* Introduction, 1843, p. xxxiii.

† In 1847, it was found more convenient during disturbances, to bring the scale of the bifilar magnet into the field of the reading telescope, by means of a small deflecting magnet placed on a beam of wood at known distances from the centre of the bifilar magnet. The effect of the deflecting magnet was afterwards determined with the aid of a second deflecting bar.

‡ Introduction, 1841–2, pp. xxviii., xxix.

45. The observations of the bifilar were made as follows: The point of the scale coinciding with the vertical wire of the fixed telescope is estimated to the tenth of a scale division at $25^s$ before the minute of observation, at the minute, and $25^s$ after it; the three readings being $a$, $b$, and $c$, the mean is deduced from the formula $\frac{a+2b+c}{4}$. The mean thus obtained is corrected to the temperature of 26° Fahr., a constant quantity of 300·0 has been added to all the corrected means. If N be the observed mean, and $t$ be the observed temperature of the bifilar bar, the corrected means $n$, given pages 1 to 170, are obtained from the formula

$$n = \mathrm{N} + 300{\cdot}0 + (t - 26^\circ)\, 1{\cdot}90$$

1·90 being the temperature coefficient in scale divisions.

The means $f$ in parts of the whole horizontal force given in the abstracts of results, pages 355 to 373, are obtained by the formula

$$f = (n - 500)\, 0{\cdot}000140$$

0·000140 being the value of $k$ for 1844.

No correction has been applied for the effect of the balance magnet, which is constant.

## BALANCE OR VERTICAL FORCE MAGNETOMETER.

46. The balance magnetometer was made by ROBINSON of London; it is composed of a magnetic needle $c\,f\,c$, 12 inches long, about $\frac{3}{4}$ inch broad, and about $\frac{1}{16}$

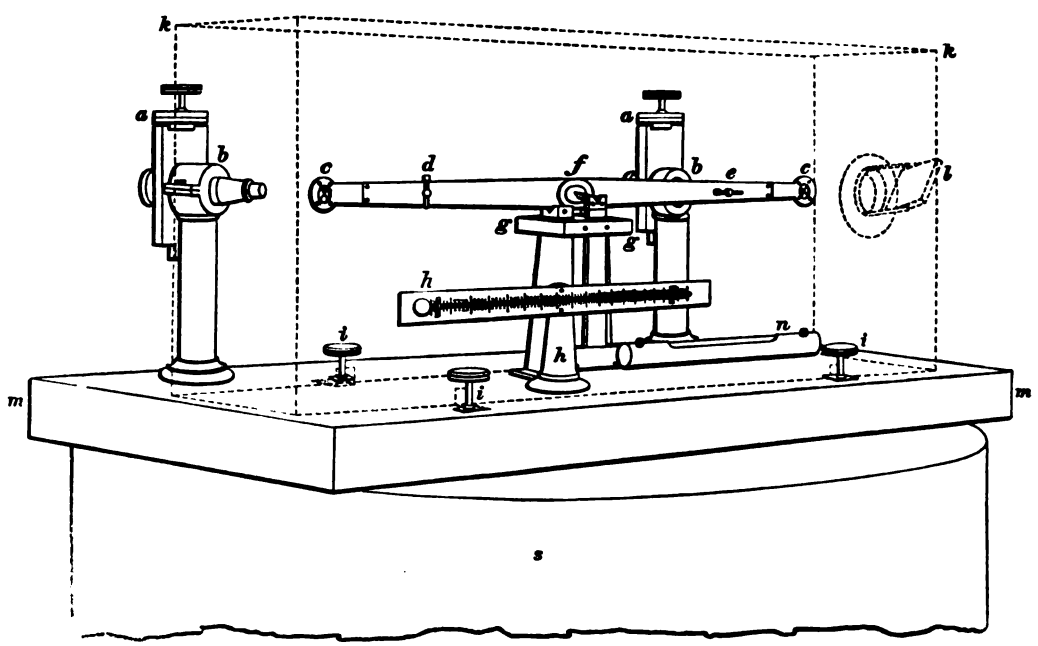


inch thick, with knife-edged axle $f$, which rests upon agate planes; brass rings $c$ $c$ are attached to the extremities of the needle, each ring carrying a cross of spider threads.

The needle is placed at right angles to the plane of the magnetic meridian, it is accurately adjusted to horizontality by a screw *e* which balances the needle, another screw *d* working vertically, regulates its sensibility. The apparatus, and a thermometer *h* which gives the temperature of the needle, is covered by a rectangular box *k* having glazed openings on both sides opposite the spider crosses; those on one side allowing light to be thrown on the crosses from two small mirrors, (one of which *l* is indicated in the figure); those on the other, for viewing them and determining their position, which is done accurately by the microscopes *b b* carrying micrometers; the micrometer heads *a a* are divided into 50 divisions. The supports *g* of the needle are fixed to a marble slab *m*, cemented to the stone pillar *s*; the horizontality of the slab is indicated by a level *n*, the lower edge of the rectangular box is covered with velvet, and it is screwed hard to the slab by the screws *i i*. A four-fold cover of thick cotton cloth was placed over the rectangular box, July $18^d$, $12^h$ 1844, in order to keep the temperature as uniform as possible; the box itself is covered with gilt-paper internally and externally. The large copper stove which was heated for the last time, January $3^d$, 1844, and which occupied a position about 7 feet from the balance magnetometer (see Plate I.), was removed from the Observatory, Nov. $4^d$ $23^h$, 1844; it was found to have no effect upon the balance needle.

47. If $m$ be the moment of free magnetism of the needle, Y the vertical component of the earth's magnetic force, G the weight of the needle into the distance of its centre of gravity from its centre of motion, and $\epsilon$ the angle contained by the line joining these two centres and the magnetic axis of the needle, the latter being horizontal, the equation of equilibrium is

$$m\,\mathrm{Y} = \mathrm{G}\cos\epsilon$$

differentiating this equation, dividing by it, and having regard to the sign of $\Delta\,\epsilon$

$$\frac{\Delta\,\mathrm{Y}}{\mathrm{Y}} = \tan\epsilon\,\Delta\,\epsilon - \frac{\Delta\,m}{m}$$

where

$$\tan\epsilon = \cot\theta\,\frac{\mathrm{T}'^2}{\mathrm{T}^2}$$

where $\theta$ is the magnetic dip, T′ is the time of one vibration of the needle in a horizontal plane, and T is the time of one vibration in a vertical plane.* $\Delta\,\epsilon$ is obtained from the observations in micrometer divisions, one division being = 0′·1003.†

The time of one vibration in the horizontal plane, T′ = $12^s$·00.‡

Time of vibration in the vertical plane.

The needle being in its usual position on the agate planes, the moveable wire of the left micrometer is made to bisect the spider-cross; the needle is then vibrated by means of a small piece of steel, through an angle of about 40 micrometer divi-

* See Dr LLOYD's Account of the Magnetical Observatory of Dublin, p. 38.

† Introduction, 1843, p. xxxviii. ‡ Introduction, 1841–2, Table 15, p. xxxv.

sions or 4′, and the periods of the cross passing the wire, are estimated to a tenth of a second (See Table 12, Introd. 1843, p. xxxix.) The arc of vibration at the commencement was measured by means of the right micrometer, it was usually taken very small on account of the difference in the times of vibration with difference of arc (afterwards noticed, 54), although it is now certain that large arcs of vibration give a time which satisfies better the previous equation and the true coefficient of the instrument.

The following Table contains the observations for the value of T made in 1844.

The number of vibrations observed, is given in the column after that containing the arc of vibration at commencement.

TABLE 5.—Values of T, the Time of Vibration of the Balance Needle in a Vertical Plane, with the Temperature of the Needle.

| Göttingen Mean Time. | | | Arc of Vib. | No. of Vib. | Time of Vib. | Temp. | Göttingen Mean Time. | | | Arc of Vib. | No. of Vib. | Time of Vib. | Temp. |
|---|---|---|---|---|---|---|---|---|---|---|---|---|---|
| | d. | h. | ′ | | s. | ° | | d. | h. | ′ | | s. | ° |
| Jan. | 0 | 22 | 3·5 | 40 | 9·31 | 38·3 | Feb. | 1 | 22 | 4·0 | 25 | 9·28 | 34·6 |
| Jan. | 2 | 22 | 2·8 | 20 | 8·91 | 31·4 | Feb. | 2 | 22 | 4·2 | 20 | 9·40 | 35·7 |
| Jan. | 3 | 2 | 4·4 | 30 | 9·48 | 40·0 | Feb. | 5 | 1 | 3·1 | 15 | 9·22 | 33·7 |
| Jan. | 3 | 4 | 4·6 | 15 | 9·80 | 43·5 | Feb. | 5 | 22 | 3·9 | 20 | 9·07 | 31·3 |
| Jan. | 3 | 5 | 5·0 | 13 | 9·96 | 45·2 | Feb. | 6 | 23 | 3·2 | 20 | 9·22 | 34·4 |
| Jan. | 3 | 22 | 4·0 | 30 | 9·74 | 41·4 | Feb. | 7 | 22 | 3·8 | 30 | 9·22 | 34·4 |
| Jan. | 4 | 22 | 4·2 | 20 | 9·67 | 41·2 | Feb. | 8 | 22 | 3·3 | 20 | 9·14 | 36·7 |
| Jan. | 5 | 22 | 3·7 | 20 | 9·97 | 46·5 | Feb. | 9 | 22 | 3·8 | 20 | 9·13 | 34·5 |
| Jan. | 7 | 22 | 3·8 | 30 | 9·42 | 39·6 | Feb. | 11 | 22 | 3·6 | 10 | 8·87 | 32·6 |
| Jan. | 8 | 22 | 2·6 | 15 | 9·38 | 39·3 | Feb. | 12 | 22 | 4·0 | 20 | 8·99 | 34·3 |
| Jan. | 9 | 23 | 4·3 | 20 | 9·22 | 37·5 | Feb. | 13 | 22 | 3·1 | 20 | 8·87 | 38·6 |
| Jan. | 10 | 22 | 4·0 | 10 | 9·52 | 40·8 | Feb. | 14 | 22 | 3·1 | 20 | 9·11 | 43·7 |
| Jan. | 11 | 22 | 4·2 | 30 | 9·49 | 43·9 | Feb. | 15 | 22 | 3·0 | 20 | 9·20 | 39·6 |
| Jan. | 12 | 22 | 3·1 | 15 | 9·48 | 38·4 | Feb. | 16 | 22 | 2·8 | 20 | 9·04 | 42·6 |
| Jan. | 14 | 22 | 3·8 | 15 | 9·12 | 32·6 | Feb. | 18 | 22 | 2·9 | 20 | 9·05 | 42·2 |
| Jan. | 15 | 23 | 4·4 | 20 | 9·01 | 34·1 | Feb. | 19 | 23 | 4·6 | 10 | 8·78 | 33·3 |
| Jan. | 16 | 22 | 3·0 | 30 | 8·90 | 34·9 | Feb. | 20 | 22 | 2·9 | 20 | 8·76 | 32·4 |
| Jan. | 17 | 22 | 3·5 | 15 | 9·15 | 36·9 | Feb. | 21 | 23 | 3·1 | 20 | 8·45 | 27·6 |
| Jan. | 18 | 22 | 3·1 | 30 | 9·35 | 43·0 | Feb. | 22 | 23 | 4·2 | 15 | 8·62 | 30·4 |
| Jan. | 19 | 23 | 2·8 | 30 | 9·29 | 36·9 | Feb. | 24 | 1 | 3·3 | 20 | 8·80 | 37·1 |
| Jan. | 21 | 22 | 3·6 | 20 | 9·33 | 37·6 | Feb. | 25 | 22 | 4·2 | 20 | 8·69 | 32·9 |
| Jan. | 22 | 22 | 4·7 | 20 | 9·42 | 40·4 | Feb. | 26 | 22 | 4·0 | 30 | 8·42 | 28·0 |
| Jan. | 23 | 22 | 3·4 | 30 | 9·26 | 36·4 | Feb. | 27 | 22 | 3·4 | 20 | 8·70 | 34·4 |
| Jan. | 24 | 21 | 2·2 | 20 | 9·50 | 44·0 | Feb. | 28 | 22 | 2·6 | 20 | 9·15 | 38·5 |
| Jan. | 25 | 22 | 4·0 | 30 | 9·54 | 41·2 | Feb. | 29 | 22 | 3·8 | 20 | 9·07 | 39·3 |
| Jan. | 26 | 22 | 3·2 | 30 | 9·58 | 45·0 | Mar. | 1 | 22 | 3·2 | 20 | 9·33 | 38·8 |
| Jan. | 28 | 13 | 2·7 | 20 | 10·14 | 43·5 | Mar. | 3 | 23 | 3·2 | 20 | 9·17 | 39·0 |
| Jan. | 28 | 22 | 3·4 | 35 | 9·67 | 40·8 | Mar. | 4 | 23 | 4·2 | 20 | 8·91 | 34·0 |
| Jan. | 29 | 4 | 2·8 | 20 | 9·69 | 41·9 | Mar. | 5 | 22 | 4·0 | 20 | 8·95 | 35·2 |
| Jan. | 29 | 22 | 2·9 | 40 | 9·84 | 43·2 | Mar. | 6 | 23 | 4·3 | 10 | 9·04 | 36·5 |
| Jan. | 30 | 22 | 3·6 | 30 | 9·50 | 36·9 | Mar. | 8 | 0 | 2·9 | 15 | 9·08 | 37·5 |

Jan. $0^d$ $22^h$. The needle comes to rest very soon after being vibrated.

Jan. $27^d$. Needle removed for the purpose of determining its temperature correction by the method of deflections.

Jan. $28^d$ $22^h$. The needle seems to have a natural tendency to vibrate.

Feb. $21^d$ $23^h$, $26^d$ $22^h$, $27^d$ $22^h$. The needle comes very soon to rest after being vibrated.

TABLE 5.—*continued.*

| Göttingen Mean Time. | Arc of Vib. | No. of Vib. | Time of Vib. | Temp. | Göttingen Mean Time. | Arc of Vib. | No. of Vib. | Time of Vib. | Temp. |
|---|---|---|---|---|---|---|---|---|---|
| d. h. | ′ | | s. | ° | d. h. | ′ | | s. | ° |
| Mar. 8 22 | 3·5 | 20 | 9·34 | 43·5 | Apr. 29 22 | 3·1 | 15 | 9·04 | 49·9 |
| Mar. 10 22 | 3·5 | 20 | 9·08 | 43·2 | Apr. 30 7 | 4·4 | 25 | 9·50 | 60·5 |
| Mar. 11 22 | 4·1 | 20 | 9·04 | 37·8 | Apr. 30 7½ | 4·0 | 15 | 10·03 | 61·0 |
| Mar. 12 22 | 4·8 | 20 | 8·96 | 35·6 | Apr. 30 22 | 3·4 | 20 | 8·97 | 50·5 |
| Mar. 13 23 | 3·2 | 20 | 8·75 | 36·8 | May 1 8 | 3·4 | 30 | 9·76 | 64·1 |
| Mar. 14 22 | 4·4 | 20 | 9·02 | 38·5 | May 1 22 | 3·7 | 20 | 9·28 | 56·2 |
| Mar. 15 22 | 3·4 | 25 | 8·68 | 35·6 | May 2 21 | 3·3 | 20 | 9·12 | 55·2 |
| Mar. 17 23 | 3·5 | 15 | 8·56 | 32·3 | May 3 8 | 4·5 | 25 | 9·81 | 64·4 |
| Mar. 18 12 | 3·3 | 20 | 8·98 | 39·8 | May 3 23 | 3·8 | 20 | 9·02 | 53·6 |
| Mar. 19 2 | 2·9 | 25 | 9·08 | 43·2 | May 5 22 | 5·6 | 25 | 8·97 | 54·5 |
| Mar. 19 23 | 3·1 | 20 | 9·14 | 43·1 | May 6 23 | 3·4 | 20 | 9·08 | 56·3 |
| Mar. 21 0 | 2·8 | 15 | 9·00 | 38·6 | May 7 22 | 3·2 | 20 | 8·75 | 52·5 |
| Mar. 21 22 | 3·2 | 15 | 9·13 | 41·8 | May 8 22 | 3·9 | 25 | 8·79 | 52·2 |
| Mar. 22 22 | 2·8 | 30 | 9·00 | 42·6 | May 9 22 | 4·0 | 20 | 9·02 | 54·6 |
| Mar. 24 22 | 3·5 | 20 | 8·91 | 41·5 | May 10 22 | 3·7 | 20 | 8·43 | 51·2 |
| Mar. 25 22 | 2·9 | 20 | 8·90 | 42·6 | May 12 22 | 3·4 | 25 | 9·03 | 56·2 |
| Mar. 26 9 | 3·0 | 20 | 9·36 | 49·6 | May 13 22 | 4·1 | 10 | 9·22 | 59·9 |
| Mar. 26 22 | 4·3 | 20 | 9·29 | 48·7 | May 14 22 | 3·7 | 20 | 8·63 | 54·1 |
| Mar. 27 23 | 3·2 | 25 | 9·27 | 46·0 | May 15 22 | 3·7 | 20 | 8·47 | 52·1 |
| Mar. 28 23 | 3·2 | 20 | 9·18 | 48·6 | May 16 22 | 4·0 | 20 | 8·57 | 51·9 |
| Mar. 29 23 | 2·8 | 10 | 9·40 | 47·0 | May 17 22 | 4·2 | 20 | 7·90 | 43·6 |
| Mar. 31 23 | 3·5 | 30 | 9·09 | 46·6 | May 19 22 | 3·7 | 15 | 8·05 | 46·9 |
| Apr. 1 22 | 3·2 | 30 | 9·47 | 49·5 | May 20 22 | 3·8 | 15 | 8·43 | 49·4 |
| Apr. 2 6 | 3·4 | 30 | 9·27 | 50·9 | May 21 23 | 3·6 | 20 | 8·28 | 51·2 |
| Apr. 2 23 | 3·6 | 20 | 9·34 | 49·0 | May 22 22 | 3·9 | 20 | 8·50 | 51·1 |
| Apr. 3 6 | 4·4 | 15 | 9·30 | 50·2 | May 26 22 | 3·8 | 20 | 8·47 | 50·5 |
| Apr. 3 10 | 3·6 | 10 | 9·25 | 49·0 | May 27 23 | 3·6 | 20 | 8·27 | 50·0 |
| Apr. 4 3 | 4·0 | 20 | 9·01 | 45·7 | May 28 22 | 3·3 | 15 | 8·10 | 49·8 |
| Apr. 4 22 | 3·4 | 20 | 8·88 | 43·0 | May 29 22 | 4·6 | 10 | 8·17 | 50·0 |
| Apr. 5 22 | 4·8 | 20 | 8·63 | 39·9 | May 30 23 | 3·6 | 20 | 8·13 | 50·6 |
| Apr. 7 22 | 3·9 | 20 | 9·33 | 49·5 | May 31 22 | 3·8 | 20 | 8·28 | 50·4 |
| Apr. 8 22 | 4·1 | 20 | 9·35 | 51·9 | June 2 22 | 3·7 | 20 | 8·26 | 51·9 |
| Apr. 10 0 | 3·2 | 20 | 9·40 | 52·5 | June 3 22 | 3·9 | 20 | 8·80 | 54·0 |
| Apr. 10 22 | 3·7 | 20 | 9·03 | 48·6 | June 4 22 | 4·3 | 20 | 8·64 | 56·9 |
| Apr. 11 20 | 3·8 | 20 | 8·92 | 46·9 | June 5 23 | 4·2 | 20 | 8·69 | 59·5 |
| Apr. 12 23 | 3·0 | 20 | 8·83 | 48·3 | June 6 22 | 3·4 | 20 | 9·04 | 61·8 |
| Apr. 14 21 | 3·8 | 20 | 8·98 | 51·5 | June 7 22 | 4·3 | 20 | 8·91 | 59·8 |
| Apr. 15 22 | 2·6 | 25 | 8·84 | 47·4 | June 9 22 | 3·7 | 15 | 8·79 | 59·9 |
| Apr. 17 2 | 4·8 | 15 | 9·21 | 52·5 | June 10 22 | 4·0 | 20 | 8·57 | 57·0 |
| Apr. 17 14 | 3·0 | 10 | 9·35 | 54·3 | June 11 23 | 4·2 | 20 | 8·68 | 60·2 |
| Apr. 18 22 | 3·0 | 20 | 9·01 | 50·2 | June 12 22 | 3·9 | 20 | 8·75 | 61·4 |
| Apr. 19 22 | 4·5 | 30 | 9·21 | 54·0 | June 13 22 | 3·7 | 15 | 8·67 | 59·3 |
| Apr. 21 22 | 3·7 | 20 | 8·91 | 49·2 | June 14 23 | 4·1 | 30 | 8·51 | 58·0 |
| Apr. 22 22 | 3·0 | 20 | 8·99 | 49·4 | June 16 22 | 4·2 | 10 | 8·32 | 56·5 |
| Apr. 23 22 | 3·3 | 15 | 8·92 | 49·4 | June 17 22 | 4·0 | 20 | 8·38 | 56·1 |
| Apr. 25 1 | 3·1 | 20 | 8·94 | 52·8 | June 18 22 | 3·3 | 15 | 8·06 | 54·3 |
| Apr. 25 22 | 4·0 | 20 | 9·20 | 52·1 | June 20 22 | 3·8 | 30 | 8·46 | 59·9 |
| Apr. 26 22 | 3·4 | 15 | 8·75 | 48·6 | June 21 22 | 3·7 | 20 | 8·62 | 60·5 |
| Apr. 28 22 | 3·4 | 20 | 8·75 | 49·2 | June 23 22 | 4·3 | 20 | 9·16 | 66·8 |
| Apr. 29 6 | 3·2 | 20 | 9·55 | 61·5 | June 24 22 | 3·9 | 20 | 8·68 | 59·5 |

April 30$^d$ 7$^h$. After the vibration the box of the magnetometer was removed for the purpose of removing an insect, but the insect could not be seen. The needle having been much vibrated from exposure to the air, the observation of vibration at 7½$^h$ was made.

May 3$^d$ 8$^h$. The needle vibrated before this observation by the accidental approach of a mass of iron introduced by visitors.

TABLE 5.—*continued.*

| Göttingen Mean Time. | Arc of Vib. | No. of Vib. | Time of Vib. | Temp. | Göttingen Mean Time. | Arc of Vib. | No. of Vib. | Time of Vib. | Temp. |
|---|---|---|---|---|---|---|---|---|---|
| d. h. | ′ | | s. | ° | d. h. | ′ | | s. | ° |
| June 25 22 | 3·3 | 20 | 7·91 | 53·0 | Sept. 2 22 | 4·0 | 10 | 8·62 | 62·1 |
| June 26 22 | 3·8 | 20 | 7·88 | 52·9 | Sept. 3 22 | 4·6 | 20 | 8·45 | 61·0 |
| June 27 22 | 3·5 | 15 | 8·08 | 55·8 | Sept. 4 22 | 3·8 | 10 | 8·43 | 62·2 |
| June 28 23 | 4·8 | 10 | 8·49 | 58·2 | Sept. 5 23 | 4·1 | 20 | 8·44 | 61·9 |
| June 30 22 | 4·0 | 20 | 8·24 | 56·7 | Sept. 6 23 | 4·4 | 20 | 8·51 | 62·0 |
| July 1 22 | 3·9 | 20 | 8·21 | 58·6 | Sept. 8 22 | 3·3 | 20 | 7·74 | 56·6 |
| July 2 23 | 3·8 | 20 | 8·30 | 58·9 | Sept. 10 22 | 3·4 | 10 | 7·69 | 54·0 |
| July 3 22 | 3·6 | 20 | 8·18 | 56·3 | Sept. 11 22 | 3·1 | 10 | 7·78 | 56·1 |
| July 4 22 | 4·3 | 20 | 7·99 | 55·2 | Sept. 12 23 | 4·0 | 20 | 7·83 | 54·0 |
| July 5 22 | 5·2 | 10 | 8·05 | 55·8 | Sept. 13 22 | 3·0 | 10 | 7·74 | 55·2 |
| July 7 22 | 4·3 | 10 | 8·22 | 57·5 | Sept. 16 22 | 3·6 | 15 | 8·02 | 57·1 |
| July 8 23 | 4·4 | 20 | 8·51 | 60·3 | Sept. 17 22 | 4·8 | 20 | 7·58 | 52·2 |
| July 9 22 | 5·1 | 20 | 8·38 | 58·8 | Sept. 19 22 | 3·3 | 15 | 7·61 | 52·4 |
| July 10 22 | 4·3 | 20 | 8·27 | 59·6 | Sept. 20 23 | 4·0 | 10 | 7·40 | 48·2 |
| July 11 23 | 4·2 | 20 | 8·34 | 58·9 | Sept. 22 22 | 3·7 | 15 | 7·32 | 46·5 |
| July 12 22 | 4·6 | 20 | 8·11 | 56·0 | Sept. 24 23 | 3·8 | 20 | 7·34 | 49·0 |
| July 14 23 | 4·1 | 20 | 7·86 | 55·3 | Sept. 27 0 | 4·0 | 10 | 8·21 | 58·0 |
| July 15 22 | 4·1 | 20 | 8·01 | 56·1 | Oct. 1 22 | 4·2 | 15 | 8·01 | 54·5 |
| July 16 22 | 4·5 | 10 | 8·30 | 58·1 | Oct. 2 23 | 4·0 | 20 | 7·95 | 55·6 |
| July 17 22 | 4·5 | 20 | 8·28 | 58·9 | Oct. 3 22 | 3·9 | 15 | 7·68 | 52·4 |
| July 18 22 | 3·9 | 15 | 8·22 | 57·5 | Oct. 6 22 | 3·4 | 15 | 7·10 | 45·4 |
| July 19 22 | 5·6 | 10 | 8·11 | 57·8 | Oct. 9 22 | 4·0 | 10 | 7·39 | 51·6 |
| July 22 0 | 3·8 | 20 | 8·22 | 62·2 | Oct. 11 22 | 4·1 | 20 | 7·49 | 49·7 |
| July 23 22 | 3·6 | 20 | 9·10 | 68·0 | Oct. 13 22 | 5·0 | 10 | 7·86 | 54·0 |
| July 25 0 | 4·1 | 20 | 9·80 | 67·2 | Oct. 14 23 | 3·6 | 20 | 7·43 | 50·8 |
| July 26 0 | 4·0 | 10 | 9·69 | 64·5 | Oct. 15 22 | 3·8 | 15 | 7·48 | 50·7 |
| July 27 0 | 5·4 | 25 | 10·04 | 66·1 | Oct. 17 23 | 4·1 | 20 | 7·13 | 48·2 |
| July 29 22 | 3·9 | 25 | 9·44 | 58·5 | Oct. 18 22 | 4·0 | 15 | 6·87 | 42·5 |
| July 30 22 | 3·5 | 10 | 9·17 | 57·2 | Oct. 21 22 | 4·1 | 15 | 7·14 | 43·6 |
| Aug. 1 2 | 3·8 | 20 | 9·18 | 58·9 | Oct. 24 22 | 3·3 | 15 | 6·90 | 44·1 |
| Aug. 1 22 | 3·2 | 10 | 9·25 | 57·9 | Oct. 27 22 | 4·0 | 15 | 7·01 | 42·5 |
| Aug. 2 22 | 3·6 | 10 | 9·25 | 56·7 | Oct. 29 23 | 3·7 | 15 | 6·97 | 46·7 |
| Aug. 5 23 | 3·3 | 10 | 9·20 | 59·5 | Oct. 30 22 | 3·8 | 10 | 6·97 | 47·9 |
| Aug. 7 0 | 4·0 | 20 | 8·97 | 58·0 | Nov. 3 22 | 4·2 | 15 | 6·72 | 43·9 |
| Aug. 7 22 | 3·5 | 20 | 8·67 | 57·0 | Nov. 7 23 | 3·3 | 15 | 7·30 | 42·5 |
| Aug. 8 23 | 5·0 | 10 | 8·58 | 57·2 | Nov. 9 1 | 4·0 | 20 | 8·24 | 46·8 |
| Aug. 10 1 | 3·4 | 10 | 8·49 | 56·6 | Nov. 10 23 | 4·0 | 10 | 8·03 | 43·7 |
| Aug. 11 22 | 2·8 | 20 | 8·55 | 59·0 | Nov. 12 23 | 2·7 | 15 | 7·61 | 42·6 |
| Aug. 13 22 | 3·4 | 20 | 8·51 | 58·7 | Nov. 17 22 | 4·7 | 15 | 8·54 | 50·2 |
| Aug. 14 22 | 4·7 | 10 | 8·62 | 59·0 | Nov. 19 22 | 4·6 | 20 | 8·35 | 50·9 |
| Aug. 15 23 | 3·5 | 20 | 8·37 | 58·0 | Nov. 24 22 | 4·9 | 20 | 7·23 | 35·1 |
| Aug. 16 22 | 3·7 | 20 | 8·53 | 58·2 | Nov. 28 22 | 4·5 | 15 | 7·89 | 46·0 |
| Aug. 19 0 | 3·4 | 20 | 8·29 | 56·6 | Dec. 1 22 | 3·4 | 7 | 7·38 | 40·0 |
| Aug. 19 22 | 3·5 | 20 | 8·18 | 58·9 | Dec. 3 23 | 4·7 | 15 | 7·41 | 36·7 |
| Aug. 22 2 | 3·8 | 20 | 8·13 | 56·6 | Dec. 4 23 | 3·4 | 15 | 7·21 | 33·1 |
| Aug. 22 23 | 3·9 | 20 | 8·03 | 55·9 | Dec. 9 23 | 5·9 | 15 | 6·80 | 32·4 |
| Aug. 25 23 | 3·4 | 20 | 8·03 | 56·5 | Dec. 10 22 | 3·9 | 15 | 6·60 | 33·6 |
| Aug. 27 22 | 4·0 | 20 | 8·16 | 55·5 | Dec. 13 22 | 3·7 | 15 | 6·81 | 33·6 |
| Aug. 28 23 | 4·6 | 20 | 8·36 | 57·1 | Dec. 17 22 | 4·6 | 15 | 7·37 | 38·6 |
| Sept. 1 22 | 4·0 | 20 | 8·60 | 61·4 | Dec. 20 22 | 4·0 | 15 | 6·91 | 30·5 |

July $24^d$ $18^h$. The box of the magnetometer lifted, and an insect removed.
July $26^d$ $3^h$. Needle much vibrated from iron introduced by visitors.
Nov. $8^d$. The needle much vibrated from a workman having brought a hammer too near the instrument.
Dec. $3^d$ $23^h$ and $9^d$ $23^h$. The vibration of the needle ceases very soon.

48. 1*st*, The first conclusion that may be obtained from this Table is, that after the needle has been vibrated by any means through a large arc, its time of vibration has been increased; this will be apparent from the observations of vibration before and after April $30^d$ $7^h$, July $24^d$ $18^h$, July $26^d$ $3^h$, November $5^d$, and November $8^d$ $21^h$. On all these occasions the needle was vibrated through large arcs, either from the accidental approach of iron, or from the removal of the box for a short period.*

49. 2*d*, It is at once obvious, that the time of vibration depends upon the temperature of the needle, a change of $+1°$ of temperature causing a change of from $+0^s{\cdot}05$ to $0^s{\cdot}10$ in the time of one vibration. The amount of change in the time of vibration, for 1° of temperature can only be determined from the changes within short periods, since,

50. 3*d*, The time of vibration diminishes with time. The balance needle was adjusted, Jan. 27, 1844, the times of vibration after the adjustment were

| | | |
|---|---|---|
| Feb. $1^d$— $6^d$ | Mean time of one vibration, $9^s{\cdot}24$ | Temperature of needle, 33°·9 |
| Feb. $19^d$—$27^d$ | ..... $8^s{\cdot}65$ | ..... 32°·0 |
| Dec. $9^d$—$20^d$ | ..... $6^s{\cdot}90$ | ..... 33°·7 |

The temperature of the needle is nearly the same in these cases; it appears, therefore, that the time of vibration has diminished fully two seconds in ten months. This diminution is altogether independent of any variation in the magnetic moment of the needle, since the time of vibration in a horizontal plane remains nearly constant. During the same period, the mean position of the needle had varied about 160 micrometer divisions. Since the position of the needle also varies with temperature, it does not at first appear improbable that the variation in the time of vibration is due to the varying position alone. Increasing temperature at the same time raises the north end of the needle and increases the time of vibration; from the beginning of 1844 till 1846, however, the north end of the needle has been rising, while the time of vibration has been diminishing. It is certain, from other observations, that the time of vibration is nearly constant for any angle which the magnetic axis of the balance needle makes with the horizontal. During a considerable magnetic disturbance, April $17^d$, 1844, observations of vibration were obtained for positions of the balance needle varying 400 micrometer divisions, yet the observed time of vibration only varied four-tenths of a second, and that not directly with the inclination of the needle, but from errors of observation and variation of temperature. Such a variation of position, if due to temperature alone, would have required a change of 50° Fahr., which would have produced a change of about $3^s{\cdot}8$, in the time of vibration.†

* See Transactions of the Royal Society, Edinburgh, vol. xvi., p. 69, Table I.

† Ibid., p. 72, Table IV.

51. In order to determine more distinctly whether change of inclination of the magnetic axis affected the time of vibration to any considerable extent, the following observations were made during an adjustment of the instrument.

January 18, 1848. The balance needle with its magnetic axis *in* the magnetic meridian, nearly horizontal, mean position + 160 mic. div.

Arc of vibration at commencement, 32′. Time of one vibration, $8^s{\cdot}05$.

After this observation, turned *out* the horizontal screw one revolution, which changed the reading from + 160 mic. div. to − 818 mic. div.

Arc of vibration at commencement, 32′. Time of one vibration, $8^s{\cdot}12$.

The horizontal screw was now turned *in* two revolutions, or one revolution farther in than at first, when the reading was changed from − 818 mic. div. to + 1120 mic. div.

Arc of vibration at commencement, 21′. Time of one vibration, $8^s{\cdot}00$.

Finally, the horizontal screw was turned *out* one revolution, as at first, the mean reading becoming as at first + 160 mic. div., when

Arc of vibration at commencement, 32′. Time of one vibration, $8^s{\cdot}12$.

52. These results are very consistent, and speak much in favour of the excellence of the knife edges of the axle. It is quite certain, therefore, that the variations in the time of vibration observed in 1844, were not due to the varying position of the needle, since all the observations in Table 5, were obtained from the needle when in positions varying less than 400 micrometer divisions.

53. As it was believed, that during considerable disturbances when the horizontal component of the earth's magnetism increased considerably, the north end of the needle might be drawn slightly out of its position at right angles to the magnetic meridian, the following observations were made to determine whether such a result would affect the time of vibration.

January $14^d$ 1848. The balance needle being placed on its agate planes with its magnetic axis at right angles to the magnetic meridian, the following observation was made; position of needle, micrometer reading + 180.

Arc of vibration at commencement 8′·4. Time of one vibration $11^s{\cdot}27$.

Needle vibrated excessively by a pair of magnetic scissors.

Arc of vibration at commencement 4′·8. Time of one vibration $11^s{\cdot}28$.

Brought a 4-inch deflecting magnet close to the *side* of the balance box near the west extremity, in order to draw the needle out of the plane at right angles to

the magnetic meridian; after considerable vibration, always checked by changing the position of the deflector, the following observation was made:

**Arc of vibration at commencement 3′·0. Time of one vibration 11ˢ·28.**

Performed the same operation with the deflector, and again observed,

**Arc of vibration at commencement 8′·0. Time of one vibration 11ˢ·12.**

Now lifted the needle by the Y*s*, lowered it, and observed the time of vibration with a large arc.

**Arc of vibration at commencement 100′·0. Time of one vibration 11ˢ·27.**

Again vibrated the needle by means of the deflector placed at the side of the needle near its east extremity, so as to displace the needle from the plane at right angles to the magnetic meridian, and observed time of vibration,

**Arc of vibration at commencement 90′·0. Time of one vibration 11ˢ·29.**

None of these operations seemed to alter the time of vibration to any distinct amount; the box was accordingly lifted off, and the needle was placed about 3° out of the plane at right angles to the magnetic meridian, the north pole (*i.e.* west extremity) being moved towards the north, the following observation was then made:

**Arc of vibration at commencement 9′·0. Time of one vibration 10ˢ·58.**

Although the time of vibration in this position differs somewhat from that in the normal position, the previous observations prove that any deviations due to natural changes of force, would be insufficient to cause the differences evident in Table 5.

54. 4*th*, It was found in 1844 and 1845, that the time of vibration depended greatly upon the arc of vibration, the time being greatest for large arcs. (See Trans. Roy. Soc. Ed., vol. xvi., p. 70, Table II.)

55. It is difficult, if not impossible, to offer any explanation of the anomalies in the time of vibration noted above, the knife-edged axle is a fruitful resource in instruments of this class, for the explanation of all difficulties. In this case, the needle is by the best maker (ROBINSON); when examined by a lens, the knife edge appears perfect, and finally, the anomalies disappear at certain times without any apparent difference in the state of the instrument; thus, in the observations already given, Jan. 14, 1848, the time of vibration for an arc of 3′ is exactly the same as for an arc of 100′; the observations also for the time of vibration with the needle differently inclined to the horizontal (Jan. 18, 1848), speak distinctly in favour of the excellence of the knife edges. It should also be remarked, that previously to the adjustment, Jan. 27, 1844, the curious effect of temperature upon the time of

vibration was scarcely exhibited; and it may be added, that in eight months since the needle has been adjusted with its axis *in* the magnetic meridian, the time of vibration appears to remain nearly constant and equally independent of temperature and arc of vibration.

56. It appears certain from these results, obtained from an instrument of the best character, treated with the greatest care, that the time of vibration in a vertical plane cannot be depended on as an element in the reduction of the observations of the balance magnetometer.

57. The question still remains, to what extent these anomalies in the time of vibration affect the observations for the varying vertical component of the magnetic force? The following fact appears to render it certain that they have no effect whatever. In determining, by the method of comparisons (see pages l. and li.), the effect of a change of 1° Fahr. upon the position of the needle, it has been found that this effect is nearly constant, while the time of vibration in the vertical plane has varied from upwards of 11 seconds in 1843, to less than 6 seconds in 1846 (No. 77, 3d); the differences of the results for the temperature coefficient being in all probability due to considerable changes of vertical force in the periods selected for the determinations, and certainly having no relation whatever to the varying time of vibration. Since the temperature coefficient in micrometer divisions ($q'$) has remained constant, it follows that the coefficient of reduction ($k$) must also be constant. This conclusion renders it the more desirable that the value of the angular motion of the needle in parts of the vertical component should be determined by another method which does not involve the time of vibration; the statical method already described for the bifilar magnetometer, has been employed for this purpose with some modification.

58. January 6, 1848. Wooden beams having been placed horizontally at right angles to the magnetic meridian, and a line having been drawn upon them, which was a projection of the prolongations of the balance needle, a small deflecting bar (3·65 inch long, and having a temperature coefficient = 0·000285), was placed vertically at different distances on the beam, and the angles of deflection of the needle were observed; the centre of the deflecting bar was in the prolongation of the axis of the balance needle when horizontal, and the distances were measured from the knife edges of the axle, which, however, was found not to be the centre of magnetism of the needle. The resulting deflections and values of $k$ for each distance will be found Table 6.

January 10, 1848, the balance needle was taken out of its box, and attached to the brass detorsion bar of the declinometer; the brass bar was mounted with a glass scale and lens, and was suspended in the declinometer box; the balance needle was then deflected by the bar used for the previous deflections, which was placed to the north and south of the suspended needle, so that in both series of deflections the prolongation of the balance needle in its normal position passed through the centre of the deflecting bar. The deflections for three distances are given, Table 7.

TABLE 6.—Observations of Déflection of the Balance Magnet resting upon the Agate Planes, January 6, 1848.

| Distance of Bar. | Order of Observation. | Bar E. N. end up. Balance. | Order of Observation. | Bar W. N. end up. Balance. | Order of Observation. | Bar E. N. end down. Balance. | Order of Observation. | Bar W. N. end down. Balance. | Deflection at 37°. | Deflection at 32°. | Log. tan. $u$. | Value of $k$. |
|---|---|---|---|---|---|---|---|---|---|---|---|---|
| Feet. | | Mic. Div. | | Mic. Div. | | Mic. Div. | | Mic. Div. | Mic. Div. | Mic. Div. | | |
| Away | 1 | + 36·7 | 14 | + 69·5 | | | 27 | − 49·0 | | | | |
| 2·6 | 2 | + 267·0 | 13 | + 383·5 | 15 | − 201·5 | 26 | − 382·2 | 308·5 | 309·0 | 7·94533 | 0·0000099 |
| 2·4 | 3 | + 333·5 | 12 | + 471·5 | 16 | − 282·0 | 25 | − 479·7 | 391·7 | 392·3 | 8·06003 | ·0000099 |
| 2·2 | 4 | + 444·1 | 11 | + 632·0 | 17 | − 401·2 | 24 | − 625·5 | 525·7 | 506·5 | 8·18828 | ·0000099 |
| 2·0 | 5 | + 612·2 | 10 | + 875·5 | 18 | − 583·5 | 23 | − 850·5 | 730·4 | 731·5 | 8·33067 | ·0000099 |
| 1·8 | 6 | + 907·5 | 9 | + 1238·2 | 19 | − 890·0 | 22 | − 1227·0 | 1065·7 | 1067·4 | 8·49577 | ·0000099 |
| 1·7 | 7 | + 1184·5 | 8 | + 1500·5 | 20 | − 1125·0 | 21 | − 1505·5 | 1328·9 | 1331·0 | 8·58925 | ·0000096 |
| Away | 6 | − 66·5 | 11 | + 28·5 | 1 | − 44·5 | | | | | | |
| 2·6 | 7 | + 190·2 | 10 | + 338·0 | 2 | − 280·7 | 5 | − 349·5 | 289·6 | 290·1 | 7·94533 | 0·0000101 |
| 1·8 | 8 | + 899·0 | 9 | + 1172·0 | 3 | − 912·5 | 4 | − 1188·0 | 1045·4 | 1047·5 | 8·49577 | ·0000103 |

TABLE 7.—Observations of Deflection of the Balance Magnet suspended horizontally by the Declinometer Thread, January 10, 1848.

| Distance of Deflecting Bar. | | Observed Deflection. | Mean Observed Deflection. | Value of $1 + \Phi$. | Deflection Corrected for Torsion. | Value of One Sc. Div. | Resulting Deflection. | Temp. of Deflecting Bar. |
|---|---|---|---|---|---|---|---|---|
| Feet. | | Sc. Div. | Sc. Div. | | Sc. Div. | ′ | ′ ″ | ° |
| 3·0 | S. | 26·96 | 25·37 | 1·00851 | 25·59 | 0·746 | 19 5 | 32·0 |
| | N. | 23·78 | | | | | | |
| 2·4 | S. | 56·83 | 52·46 | | 52·91 | | 39 28 | |
| | N. | 48·09 | | | | | | |
| 1·9 | S. | 129·88 | 117·43 | | 118·43 | | 88 21 | |
| | N. | 104·98 | | | | | | |

From the deflections, Table 7, and the formula

$$\frac{M}{X} = r^3 \tan u \left(1 + \frac{p_1}{r^2} + \frac{q_1}{r^4}\right),$$

we find

$$\log \frac{M}{X} = 9{\cdot}13614 \qquad -\log p_1 = 9{\cdot}88791 \qquad -\log q_1 = 9{\cdot}11654$$

From the previous equation,

$$\tan u = \frac{M}{X} \frac{1}{r^3 \left(1 + \frac{p_1}{r^2} + \frac{q_1}{r^4}\right)};$$

the values of $\frac{M}{X}$, $p_1$, and $q_1$, given above, and the values of $r$ from the first column of Table 6, being substituted in this equation, the values of log tan $u$, column 12, have been obtained.

If Y, the vertical component, be substituted for X, in equation (2.), No. 34, we shall have, since $Y = X \tan \theta$

$$\frac{\Delta Y}{Y} = \frac{M}{r^3 X \tan \theta}\left(1 + \frac{p_1}{r^2} + \frac{q_1}{r^4}\right),$$

whence

$$k = \frac{\tan u}{n \tan \theta}$$

where $k$ is the value of $\frac{\Delta Y}{Y}$ for one micrometer division, $u$ and $n$ are the corrected horizontal and vertical deflections for the same distance $r$; the former in angular measure, its logarithmic tangent being given, column 12, Table 6; and the latter in micrometer divisions, reduced to the temperature of the deflecting bar during horizontal deflections; $\theta$ is the magnetic dip, the adopted value being 71° 20′. The temperature coefficient of the deflecting bar = 0·000285.

The mean of all the values of $k$, 13th column, Table 6 = 0·00000994.

59. In the foot-notes to the observations, pages 1 to 157, the value of $k$ is given =0·0000085, that having been the value deduced from the vertical deflections of the balance needle compared with the horizontal deflections of a short unifilar magnet July 1 and 2, 1846: when these vertical deflections are compared, by the previous method, with the horizontal deflections of the same needle, given Table 7, allowance being made for the loss of magnetism of the deflecting bar between July 1846 and January 1848, $k$ is found =0·00001025.

**The adopted value of $k$ for the balance magnet=0·0000100**

This value of one micrometer division in parts of the whole vertical component may be considered applicable to all the observations of the balance magnet since 1841: it has been used in the abstracts of results for the present volume.

60. Adjustment of the balance needle.

The balance needle was removed January $27^d$ $0^h$ 1844, for the purpose of determining its temperature coefficient by hot and cold water experiments: the details of these observations have been already given, Introduction, 1841–2, p. xliii.: the needle was readjusted January $27^d$ $8^h$.

61. The observations before January $27^d$ were connected with those after that date in the following manner:—

| | | | |
|---|---|---|---|
| | | Mic. Div. | |
| Mean balance reading corrected for temperature, Jan. 15d—20d, . | = | 821·0 | |
| ..... Jan. 22d—26d, . | = | 811·9 | |
| Mean change of reading for 7 days, . . . . . | = − | 9·8 | Mic. Div. |
| Mean reading, therefore, corresponding to January 28d before adjustment, . | | | =806·3 |
| Mean balance reading corrected for temperature, Jan. 29d—Feb. 3d, | = | 766·5 | |
| ..... Feb. 5d—Feb. 10d, | = | 759·3 | |
| Mean change of reading for 7 days, . . . . . | = − | 7·2 | Mic. Div. |
| Mean reading, therefore, corresponding to January 28d after adjustment, . . | | | =770·1 |
| The readings after adjustment are therefore less than before adjustment, by . | | | 36·2* |

The difference of mean readings for the two days before and after adjustment, and the difference for the day before and after adjustment, are each nearly =39·0 mic. div., whence 37·0 has been adopted as the true difference. All the observations of the balance made between Dec. 31, 1843 and January 27, 1844 have been corrected by − 37·0 mic. div.

62. The observations of the balance magnetometer are made in the following manner :—The moveable wire of the right micrometer is made to bisect the spider-cross half the time of vibration in the vertical plane before the minute of observation, and that of the left micrometer as long after the minute; the mean of the two readings gives the position of the needle at the minute. The readings increase positively when the north pole of the needle moves below the horizontal. The quantities given, pages 1 to 157, are obtained thus : $n$ being the observed reading of the needle (generally negative), $t$ that of the thermometer, giving the temperature of the needle, $q'$ the temperature coefficient in micrometer divisions =7·90, and R the quantity in the column, " Balance Corrected"

$$R = 700 + q'(t - 26) + n;$$

increasing tabular values, therefore, indicate increasing vertical force.

## THE TEMPERATURE COEFFICIENTS OF THE DEFLECTING, BALANCE, AND BIFILAR MAGNETS.

### *Deflecting Magnet.*

63. The temperature coefficient of the large deflecting bar (15 inches long), used in the observations for the absolute horizontal intensity, was determined November 11, 1843, by hot and cold water experiments, see pages xlii. and xliii., Introduction 1843, for the details: the mean of all the observations gave

The correction for 1° of Fahr., $q = 0{\cdot}000288$

64. The observations from which this result was obtained were very good, considering that the whole angle of deflection was less than 3°, and it may therefore be worth examining the individual results for the highest and lowest temperature. The whole number of results was 15, the mean difference, from the final result given above, =0·000025, and the probable error of a *single* result was therefore about 0·000021.

The mean of 9 results for the mean temperature 49°·7 gave $q$ = 0·000289
The mean of 6 ..... 68°·7 ..... $q$ = 0·000286

so that the temperature coefficient for this bar is constant within the *ordinary* temperatures occurring during the observations in which it was employed.

### *Bifilar Magnet.*

65. The temperature coefficient for this magnet was also determined by means of hot and cold water experiments, Nov. 9 and 10, 1843. See page xli., Introduction, 1841–2, for the details. The whole number of results was 30: the mean gave

The correction for 1° Fahr., Q = 0·000294.

66. If the 27th and 28th results (counting from the top of the last column of Table 19, p. xli., Introduction, 1841–2) be rejected, as it is believed that the great difference of both from the mean was probably due to one error in reading, we find the average difference of the 28 results from the mean = 0·000021, and the probable error of a single result was therefore about 0·000017. Combining the results from high temperatures together, and similarly for those from low temperatures, we find

The mean of 15 results for the mean temperature 48°·0 gave Q = 0·000292
The mean of 13 ..... 68°·7 ..... Q = 0·000295

so that for the bifilar magnet, also, the temperature coefficient is constant within the ordinary temperatures of 32° to 80° Fahr.

67. The correction for the expansion of the silver wires and brass grooved wheel, =0·000010, being added to the value of Q above, we have

The temperature correction for 1° Fahr., *from hot and cold water experiments*, $q$ = 0·000304.

68. As the observations in connection with the balance needle had shewn that there might exist variations due to temperature, other than those due to the variation of the magnetic moment of the magnet, such as the varying elasticity of the suspending wire of the bifilar magnet, the temperature coefficient was determined in the following manner, which had at first been found to give consistent results for the balance needle.

69. A series of days being selected in which the magnetic irregularities are small, and in which the variations of temperature are as considerable as possible, if we compare the mean instrumental readings for any two days, and if $\Delta$ R be the difference in scale divisions, this difference is due to change of temperature of the magnet, and to change of the horizontal component of the earth's magnetism, let the portion of change of reading due to the former = A, and to the latter = $\Delta$ X, so that

$$\Delta R = A + \Delta X.$$

If the difference of the mean temperatures of the magnet for the same two days be $\Delta t$, then the correction for 1° of temperature in scale divisions

$$q' = \frac{A}{\Delta t}$$

whence

$$q' = \frac{\Delta R}{\Delta t} - \frac{\Delta X}{\Delta t}$$

Let a series of such values be obtained by comparing the mean scale reading, and mean temperature of the magnet for each day with those for each day following in the period selected: if we consider the differences $\Delta t$ positive, when the succeeding day's mean temperature is less than that for the preceding day, and sum the whole number of differences for which $\Delta t$ is positive,* then

$$q' = \frac{\Sigma \Delta R}{\Sigma \Delta t} - \frac{\Sigma \Delta X}{\Sigma \Delta t}$$

If we neglect the last member, the whole error of the determination of $q'$ will depend on the sum of variations of the mean horizontal force $\Sigma \Delta X$; as in a sufficient number of determinations, it is probable that these variations will be as much positive as negative, and, therefore that the numerator will nearly vanish, the last member may be neglected in the determination of $q'$, and this with the more accuracy the larger the sum of the differences of temperature $\Sigma \Delta t$. Again, if the differences for which $\Delta t$ is negative are summed, we shall have

$$q' = \frac{\Sigma \Delta R}{\Sigma \Delta t} + \frac{\Sigma \Delta X}{\Sigma \Delta t}.$$

The sign of the first member on the right remains as before, since $\Delta$ R also changes sign. Reasoning as in the previous case, $\Sigma \Delta X$ may be supposed nearly zero, and the last member of the equation negligible. If, however, the supposition that the sign of $\Delta$ X varies positively and negatively with reference to the sign of $\Delta t$ be inaccurate, it must be supposed either that the horizontal component remains

* If the scale readings increase with increasing horizontal force, $\Delta$ R will generally be negative when $\Delta t$ is positive, and *vice versa*. The sign of $\Delta t$ is used as the argument, so that if $\Delta$ R be positive when $\Delta t$ is positive, that value of $\Delta$ R will be subtracted from the sum of differences $\Sigma \Delta$ R.

constant, and therefore, that $\Delta X = 0$, or that it varies in one direction only, increasing continuously, or diminishing continuously, throughout the period selected, and, therefore, that the sign of $\Delta X$ is the same for both equations. In the latter case, it is evident that by taking the mean of the values of $q'$ from the two equations, the last members will nearly destroy each other. It has been supposed that the variations of X are altogether independent of the variations of the temperature, a supposition which is borne out by every method of examination of the results. The details of a series of comparisons are given, pages li., lii., and liii., Introduction, 1843, from these it appears:

70. 1*st*, That the value of $q'$ is the same, when a sufficient number of comparisons have been obtained, whether it has been obtained from comparisons of daily means, at 1, or 2, or 3, . . . . or 14 days' interval.

71. 2*d*, That the value of $q'$ is the same, whether the differences of temperature have been due to natural or artificial causes, and when the differences of temperature of the magnet have had an opposite sign from those for the temperature of the external air.

72. From the second result, it follows, that the variations of the horizontal component of the earth's magnetism are wholly independent of the temperature of the air, and from both results it appears probable that they are independent of the temperature of the soil.*

73. The following Table contains the sums of differences of the daily mean temperature of the bifilar magnet, and the value of $q'$ which has resulted from each series of comparisons. The series of comparisons for 1845 have been made since the publication of the series for 1844, for the purpose of verifying the constancy of the result.

TABLE 8.—Determinations of the Temperature Coefficient of the Bifilar Magnet.

| Period. | Sum of Diff. Temp. | Value of $q'$. | Period. | Sum of Diff. Temp. | Value of $q'$. |
|---|---|---|---|---|---|
| 1844. | ° | Sc. Div. | 1845. | ° | Sc. Div. |
| May 9—May 24 | 320·6 | 2·22 | Jan. 13—Feb. 12 | 1809·0 | 1·81 |
| May 29—June 28 | 1610·7 | 1·83 | Feb. 26—Mar. 28 | 1608·1 | 2·06 |
| July 17—July 30 | 270·0 | 1·77 | June 2—July 2 | 1725·0 | 2·13 |
| Sept. 2—Sept. 25 | 1164·4 | 1·96 | Dec. 8—Dec. 31 | 757·7 | 1·65 |
| Nov. 26—Dec. 13 | 833·3 | 1·99 | | | |

The series of observations for 1844, giving each result an equal weight, give $q' = 1{\cdot}95$ sc. div.
..... 1845, ..... $q' = 1{\cdot}91$ ...
..... 1844, giving the results the weights $\Sigma \Delta t$, give $q' = 1{\cdot}92$ ...
..... 1845, ..... $q' = 1{\cdot}95$ ...

* See foot-note, p. 395 of the present volume.

Whether the results for each year have equal weights, or have weights depending on the sums of differences of the daily mean temperatures ($\Sigma \Delta t$), we find

$$q' = 1{\cdot}93 \text{ sc. div.}$$

The adopted value of the temperature coefficient of the bifilar magnet, $q' = 1{\cdot}90$ sc. div.

The value of one scale division in parts of force for the period of comparisons (1844 and 1845), being $k = 0{\cdot}000140$.

Whence, the correction for 1° Fahr., from comparisons of observations, is $q = 0{\cdot}000266$.

74. The result from hot and cold water experiments is nearly $\frac{1}{7}$ more. It appears, therefore, that the determination of the temperature coefficient, by removing the magnet from its position in the instrument and varying its temperature by means of hot and cold water, cannot be depended on. It appears also, that when a sufficient number of observations is included, the method of comparison previously described gives, under very different conditions, consistent, and, therefore, it is probable, accurate results.*

*Balance Magnet.*

75. The temperature coefficient of the balance magnet was determined by means of hot and cold water experiments August 24, September 1 and 2, and November 13, 1843, and January 27, 1844. See pages xlii., xliii., and xliv., Introduction, 1841–2, for the details. The mean of the whole observations, properly weighted, gave

$$q = 0{\cdot}000073.$$

76. The only good series was that obtained January 27, 1844, which included changes of temperature from 35° to 65° only; the other series are too inaccurate to be employed for the determination of the value of $q$ for high and low temperatures; from series of comparisons of the usual observations of the balance it has been found, however, that the value of $q'$, the temperature correction for 1° Fahr. in micrometer divisions, is the same for high and low temperatures, thus—

| | Mic. Div. |
|---|---|
| From 7 series of comparisons in 1844 and 1845, about the mean temperature 40°, | $q' = 8{\cdot}33$ |
| From 8 ..... 60°, | $q' = 8{\cdot}30$ |

As the first result is the mean of 7 values of $q'$, obtained from comparisons of the mean readings of the balance magnetometer for about 170 days, in the months of January, February, November, and December 1844 and 1845; and as the second

* It should be remarked, that these conclusions do not depend wholly upon the results for the Makerstoun instruments, their accuracy has been verified by an examination of the observations made in other places.

result is the mean of 8 values of $q'$, obtained from comparisons of the mean readings of the balance magnetometer upon about 190 days in the months of May, June, July, August, and September 1844 and 1845; it is extremely probable that the temperature coefficient for the balance magnetometer is constant for the ordinary temperatures of observation.

77. As it was found impossible to determine $k$ the value of one micrometer division in parts of the whole vertical component, by means of the vertical vibrations, the value of $q$ obtained from hot and cold water experiments could not be employed, since the observations could not be reduced to parts of vertical force, nor could the value of $q$ be reduced to micrometer divisions. In consequence of this difficulty, the method already described for the bifilar magnetometer was first employed for the determination of $q'$ the temperature coefficient in micrometer divisions: the details of several of these comparisons will be found, pages xlv., xlvi., xlvii., xlviii., and xlix., Introduction, 1843. It was found from these comparisons,

1*st*, That the value of $q'$, when a sufficient number of comparisons had been obtained, was independent of the interval between the days compared.

2*d*, That the value of $q'$ remained the same after various adjustments of the needle; the vertical screw for adjusting the sensibility never having been touched.

3*d*, That the value of $q'$ has remained constant while the time of vibration in a vertical plane has varied from upwards of 11ˢ to less than 6ˢ; from which result it has been concluded that the value of $k$ also has been constant.

4*th*, That the value of $q'$ is the same, whether the differences of temperature of the magnet have been due to natural or artificial causes, and whether the differences of temperature of the magnet have had the same sign or an opposite sign from those of the temperature of the air.

78. From the 1st and 4th conclusions, it follows that the variations of the vertical component of the earth's magnetism are independent of the temperature of the air and of the temperature of the soil.*

79. The mean of all the results in the volume for 1843, Introduction, pages xlvii. and xlviii., gave

$$q' = 7{\cdot}90 \text{ micrometer divisions};$$

and adopting the value of $k$, obtained from deflections, No. 59,

$$q = 0{\cdot}000079.$$

Which result is only $\frac{1}{12}$ more than that obtained from the hot and cold water experiments: it appears in the case of the Makerstoun instrument that the errors of the usual methods are found chiefly in the determination of $k$; this, however, is not always the case.

The observations for 1843, 1844, 1845, and 1846, in micrometer divisions, have been corrected by the value

* See foot-note, p. 395 of the present volume.

$$q' = 7{\cdot}90 \text{ micrometer divisions.}$$

80. Since this value was obtained, several other determinations have been made, by comparisons of observations in 1844, 1845, and 1846; all the results obtained are given in the Table below; several of the results obtained more lately have been deduced from periods ill fitted to give a good value; the whole, however, have been given in order to shew the amount of error that may be expected in using bad series. In one or two of these cases the amount of disturbance has not been very considerable, but the greatest variations of the daily mean vertical force have *happened* to occur at the same time with the greatest variations of mean temperature; it is believed that it is to this cause chiefly that the differences of the results are to be attributed.

TABLE 9.—Determinations of the Temperature Coefficient of the Balance Magnet.

| Period. | Sum of Diff. Temp. | Value of $q'$. | Period. | Sum of Diff. Temp. | Value of $q'$. |
|---|---|---|---|---|---|
| 1843. | ° | Mic. Div. | 1844. | ° | Mic. Div. |
| Jan. 16—Jan. 21 | 58·4 | 8·21 | Nov. 4—Nov. 30 | 1066·2 | 6·92 |
| Jan. 23—Jan. 28 | 90·9 | 6·99 | Dec. 2—Dec. 28 | 939·0 | 7·20 |
| Jan. 30—Feb. 4 | 64·0 | 7·21 | 1845. | | |
| Feb. 6—Feb. 11 | 67·8 | 6·69 | Jan. 6—Feb. 8 | 2086·3 | 7·57 |
| June 1—June 30 | 1885·8 | 7·82 | Feb. 26—Mar. 28 | 1830·1 | 8·00 |
| Sept. 6—Sept. 16 | 120·4 | 8·04 | Apr. 10—May 10 | 1279·1 | 9·08 |
| 1844. | | | June 2—June 30 | 1551·6 | 8·47 |
| Jan. 1—Jan. 26 | 971·4 | 9·27 | July 7—Aug. 6 | 1069·8 | 10·01 |
| Feb. 5—Mar. 6 | 1392·5 | 9·30 | Sept. 9—Oct. 13 | 1580·6 | 7·81 |
| May 9—May 24 | 350·6 | 7·93 | Dec. 11—Jan. 10 | 1585·2 | 10·17 |
| May 29—June 29 | 1693·1 | 7·43 | 1846. | | |
| July 4—Aug. 3 | 1360·9 | 7·74 | Nov. 30—Dec. 26 | 1190·2 | 7·72 |
| Aug. 4—Sept. 6 | 904·0 | 7·90 | | | |

Giving the differences for all the series equal values, and dividing the sums of differences of the daily means in micrometer divisions by the sums of differences of the daily mean temperatures of the needle, we have

$$q' = 8{\cdot}23 \text{ mic. div.};$$

but if the results from the bad series for July 7—August 6, 1845, and December 10, 1845—January 10, 1846, be rejected, the value would be

$$q' = 7{\cdot}99 \text{ mic. div.}$$

If the *whole* series were properly weighted, it is believed that the resulting value of $q'$ would be less than 8·00 mic. div. The excellent series, November 30—December 26, 1846 (after an adjustment July 1846) gives

$q' = 7{\cdot}72$ mic. div.

The adopted value of the temperature coefficient for the balance magnet = 7·90 mic. div.

It is believed that this value, which has been used in correcting all the observations since the commencement of 1843, is within one-tenth of a division of the truth.

81. The following matters should be attended to in determining the temperature coefficient by the previous method.

1*st*, The period selected should be free from considerable magnetic irregularities.

2*d*, There should be a considerable change of daily mean temperature, the temperature at the beginning and end of the period being nearly the same.

3*d*, The smaller the duration of the period consistently with the 2d the better.

4*th*, It will be found best, in general, to correct the daily means at first by an approximate coefficient, and

5*th*, To eliminate the secular change approximately, if it be considerable.

Both the latter methods were employed in many of the determinations given in Table 9.

## INCLINOMETER.

82. The dip instrument was made by the late Mr ROBINSON of London. The vertical circle is 9½ inches in diameter; it is divided to 10′, the graduations counting from 0° on the horizontal to 90° on the vertical; 1′ is estimated with the aid of lenses attached to a glazed case; the vertical circle turns with a copper framework on a vertical axis, centred in a horizontal circle; the latter is 6 inches in diameter, is divided to 30′ and is read to 1′ by means of a vernier. A sliding framework carrying Y*s* moves within that bearing the agate planes on which the axle of the needle rests; the Y*s* serve to lift and lower the needle on the agates, but they have been found to act very irregularly, at times giving the needle a pitch in a certain direction. A level screwed to the basement plate indicates the horizontality of the agates; this was, however, also verified occasionally by means of a small level placed upon them; it was found that the level varied according as the door of the case inclosing the instrument was shut or open; it was, therefore, always tested with the door shut, as it is during observations. The reading of the horizontal circle, when the vertical circle is in the magnetic meridian, was obtained with the aid of a horizontal needle, carried on a pivot whose arms rest on the agate planes. There are two dipping needles, numbered 1 and 2, and one end of each needle is marked A, the other end is marked B; all the marks are on one face of each needle. The needle is observed in four positions with one end dipping, namely, with the marked face of the needle on the same side as, and opposite to, the graduated face of the circle, the latter being in the meridian, first to the east, and then to the west; as

each extremity of the needle is observed, there are thus eight readings obtained. The poles being changed, and the other end dipping, other eight readings are similarly obtained. The means of the two readings for each position are given in this volume. In changing the poles, the needle was placed on a small wooden block having a hole to receive the axle; it then received eight strokes on each face (as in the method of double touch) from two magnets, each 9 inches long, $\frac{3}{4}$ inch broad.

83. Observations were made on April 18 and May 2, 1843, in different azimuths, in order to determine the correction due to the irregularity of the needle's axle, or perhaps to the presence of iron in the vertical circle; these observations have been already given (Table 21 and Table 22, Introduction, 1841-2.) The correction deduced was about $-$ 11′ for needle No. 1. No correction has been applied to the results in this volume. In 1846, the vertical circle was removed from the instrument and placed horizontally, the dip needle was suspended by a silk fibre within the circle, the needle and circle being in the same plane, the needle was then vibrated horizontally, and the zero of the graduations was placed in different azimuths; the time of vibration was found very little affected by the varying positions of the circle; it seems probable, therefore, that the correction above mentioned is due solely to the imperfections of the axle.

The inclinometer occupied a strong wooden pillar in the intensity house unconnected with the floor.

84. From various instrumental causes, the observations of magnetic dip in 1844 appear to be of little value, the difficulties in connection with the lifter already noticed in the Introduction for 1843 were frequently experienced, much care was bestowed upon the observations, but, without some alteration in the instrument, no care seemed capable of giving consistent results. Upwards of 60 hours were expended in observing alone in 1844, and a half may be added for the necessary preparations, &c. Yet, it is conceived, that a single good observation would be as valuable as the mean of the whole.* The observations are given, pages 162-164.

The mean of all the observations of magnetic dip in 1844 = 71°·28′·7.

* Observations were made in the following manner for the determination of the magnetic dip in February 1846. The dipping needle having been placed on its supports in the inclinometer, it was deflected by a magnet placed at known distances, in order to determine the ratio of the magnetic moment of the deflecting bar to the vertical component of the earth's magnetism; the moment of the bar was obtained from observations of deflection and vibration for the absolute horizontal intensity, whence the vertical component could be determined, and the dip from the ratio of the two components. The advantage of this method over others, consists in the capability of using a powerful deflecting bar whose moment can be determined with the accuracy of the observations for the horizontal intensity.

## BAROMETER.

85. The barometer is by NEWMAN. The tube is 0·552 inch in diameter; the scale is attached to a brass rod, terminating in an ivory point, which at each observation is moved by means of an endless screw till it meets its image in the mercury of the cistern; the cistern is about 3 inches in diameter; the vernier professes to read to 0·002 inch, and that 0·001 inch may be estimated, but the graduation is so inexact as to give changes in error from 0·002 to 0·003 inch, when the reading is made alternately at the two extremities of the vernier.

86. In 1841, the barometer was compared indirectly with the standard barometers of the Royal Society of London, by means of one made by NEWMAN for the DUKE of ARGYLE. The comparisons of the DUKE of ARGYLE's barometer with the readings from the flint and crown glass tubes of the Royal Society (both tubes being connected with the same cistern) are given, Table 23, Introduction, 1841–2. They are not consistent. A consistent series of comparisons of the Makerstoun barometer with the DUKE of ARGYLE's is given, Table 24, Introduction, 1841–2. The results of these comparisons are

| | in. |
|---|---|
| DUKE of ARGYLE's barometer *minus* Royal Society's crown and flint glass, | = + 0·009 |
| Makerstoun barometer *minus* DUKE of ARGYLE's, . . . . . | = + 0·003 |
| Makerstoun barometer *minus* Royal Society's crown and flint glass, . . | = + 0·012 |

87. In July 1847, a series of comparisons was made by myself of a barometer by TROUGHTON, marked B, belonging to Sir THOMAS BRISBANE, with the flint-glass barometer of the Royal Society of London. The same barometer (TROUGHTON B) was a few days afterwards compared by myself with the Makerstoun standard barometer: these comparisons are given, Tables 10 and 11.

TABLE 10.—Comparisons of the Barometer TROUGHTON "B" with the Flint-Glass Standard Barometer of the Royal Society of London, July 2, 1847.

| Royal Society's *Flint-Glass* Standard. | | Troughton "B." | | | Royal Society Standard *minus* Troughton "B." |
|---|---|---|---|---|---|
| Height. | Temperature. | Height. | Temperature. | Corrected to Temp. of Royal Society Standard. | |
| in. | ° | in. | ° | in. | in. |
| 30·302 | 63·6 | 30·262 | 66·0 | 30·256 | +0·046 |
| ·304 | 63·9 | ·267 | 66·4 | ·261 | ·043 |
| ·300 | 64·2 | ·266 | 66·8 | ·259 | ·041 |
| ·291 | 64·8 | ·254 | 65·8 | ·251 | ·040 |
| ·292 | 64·8 | ·255 | 66·2 | ·251 | ·041 |
| ·268 | 64·5 | ·232 | 65·7 | ·229 | ·039 |

TABLE 11.—Comparisons of the Makerstoun Standard Barometer with the Barometer TROUGHTON "B," July 8d—10d, 1847.

| Makerstoun Standard. | | Troughton "B." | | | Troughton "B" *minus* Makerstoun Standard. |
|---|---|---|---|---|---|
| Height. | Temperature. | Height. | Temperature. | Corrected to Temp. of Makerstoun Standard. | |
| in. | ° | in. | ° | in. | in. |
| 29·722 | 68·7 | 29·682 | 73·0 | 29·671 | −0·051 |
| 29·717 | 66·4 | 29·667 | 66·8 | 29·666 | ·051 |
| 29·924 | 71·3 | 29·882 | 74·9 | 29·873 | ·051 |
| 30·061 | 61·5 | 30·020 | 65·2 | 30·010 | ·051 |
| 29·987 | 67·0 | 29·946 | 71·3 | 29·935 | ·052 |

From these comparisons we find

| | in. |
|---|---|
| TROUGHTON B *minus* Royal Society's flint-glass, . . . . . | = − 0·0417 |
| Makerstoun standard *minus* Troughton B, . . . . . | = + 0·0512 |
| Makerstoun standard *minus* Royal Society's flint-glass, . . | = + 0·0095 |

In the comparisons made in 1841, the mean of both the crown and flint glass tubes has been employed: making use of Tables 23 and 24, Introduction, 1841–2, we find

| | in. |
|---|---|
| DUKE of ARGYLE'S barometer *minus* Royal Society's flint-glass, . . | = + 0·0055 |
| Makerstoun standard barometer *minus* DUKE of ARGYLE'S, . . . | = + 0·0029 |
| Makerstoun standard barometer *minus* Royal Society's flint-glass, .. | = + 0·0084 |

The comparisons in 1841 and 1847, therefore, differ only one-thousandth of an inch.

88. All the observations of the Makerstoun standard barometer are corrected by −0·012 inch to the mean of the Royal Society's flint and crown glass barometers; they are also corrected for temperature to 32° Fahr., by SCHUMACHER'S Tables, given in the Report of the Committee of Physics of the Royal Society of London. The cistern of the barometer is 213 feet above the mean level of the sea at Berwick-upon-Tweed.

## THERMOMETERS.

89. The dry and wet bulb thermometers *a a* are by ADIE and SON. The bulbs *b b* are 0·3 inch in diameter, and tenths of a degree can be estimated with accuracy on the scales *a a*; the thermometers are attached to a wooden slab *c*, fixed to the

moveable front *d* of the wooden case, 4 feet above the soil; the bulbs project below the wooden slab *c*, and as holes are cut in the wooden case behind them, they are exposed to freely-circulating air. The wooden case, which has slightly-projecting top and sides at the front, and a double sloping back, revolves on a post *f*, and can be turned from within the Observatory by means of cords and pulleys *g g*. When an observation is made, the case is turned till the thermometers face the window *h*, being 9 inches distant from it; after reading, which is done through the glass (thus avoiding any error due to proximity of the observer, or the light at night), the case is again turned with the back towards the window, or towards the wind if it rain. It was found early in the summer of 1843, that in spite of the precaution of turning the back of the case towards the sun before $7^h$ A.M. and after $5^h$ P.M., if the sun shined brightly, the temperature indicated by the thermometer was visibly increased. In all such cases, therefore, the moveable front *d* was lifted off the case and suspended in the shade, at an equal height from the soil, on the west or east wall of the Observatory, being kept apart from it by projecting knobs. Observations at different times shewed, that, all other things being equal, the temperature was the same in all the three positions, but when the sun shined on the case, it might be one or two degrees less to the east or west than to the north. The observations made to the east or west after July 9, 1844 are indicated in the column of differences by a cross, thus ⊹, for the first observation after removal from the case, and by a cross, thus ⊹, for the last observation before replacing the thermometers on the case.

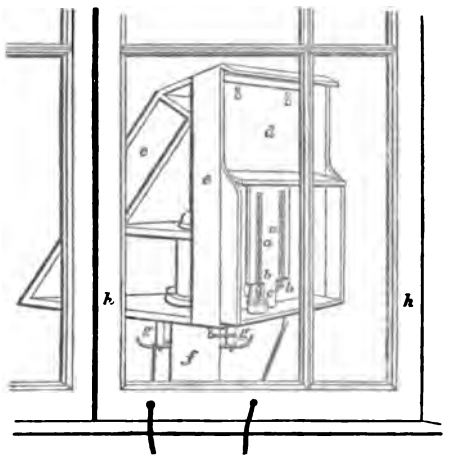


90. It sometimes happens, when the air is very humid, during frost, and on clear nights, especially when the temperature is falling, that the dry bulb thermometer reads less than the wet bulb;* when such is the case, the *difference* of the readings of the two thermometers has not been given, and in the summations for

* The cause of this apparent anomaly in frosty nights, it is conceived, is due to the deposition of moisture on the silk cover of the wet bulb, which is frozen as it is deposited, till it becomes a thickish coat of silk and ice; the dry bulb receives, at the same time, a thin coat of moisture, and becomes a more facile wet bulb. In clear, humid nights, without frost, nearly the same explanation will apply; the dry bulb will radiate its heat into space with more facility than the wet bulb. It might be preferable, therefore, on these occasions, to make use of the readings of the wet bulb for the temperature of the air, and of the readings of the dry bulb for the temperature of evaporation during frosty nights; where, however, the differences of the readings may be considered due chiefly to the different radiating powers of the two bulbs, the readings, perhaps, should be considered the same; this has been done in all cases in the present volume.

the abstracts of results, the reading of the wet bulb has been considered the same as that of the dry bulb.

91. The following Table contains the corrections of the dry and wet bulb thermometer readings for 1844, to the reading of a standard thermometer by NEWMAN,—the reading of the latter, in a mixture of pounded ice and water, being 32°·00. On January 7, 1843, a series of comparisons of different thermometers was made with the standard thermometer; the comparisons were made in water of different temperatures; the results were given in the Introduction for 1843, Table 23, p. lvii. On October 17, 1843, the readings of the thermometers in a mixture of pounded ice and water were obtained; they were as follow:—

NEWMAN'S standard, 32°·00. Dry bulb, 32°·8. Wet bulb, 32°·7.

Similar comparisons, September 4, 1844, gave

NEWMAN'S standard, 32°·00. Dry bulb, 32°·75. Wet bulb, 32°·65.

On January 7, 1843, the readings in water and ice were,

NEWMAN'S standard, 32°·00. Dry bulb, 32°·7. Wet bulb, 32°·6.

It appears, therefore, that in 1844, the index errors of the dry and wet bulb thermometers were about one-tenth of a degree greater than in January 1843; altering the errors, Table 23, Introduction, 1843, to this extent, we obtain the following Table:—

TABLE 12.—Corrections of the Dry and Wet Bulb Thermometers to the Temperature by NEWMAN'S Standard, in 1844.

| Temperature. | Corrections. | | Temperature. | Corrections. | |
|---|---|---|---|---|---|
| | Dry. | Wet. | | Dry. | Wet. |
| ° | ° | ° | ° | ° | ° |
| 32 | −0·8 | −0·7 | 60 | −0·5 | −0·3 |
| 36 | −0·7 | −0·6 | 63 | −0·4 | −0·3 |
| 40 | −0·7 | −0·6 | 67 | −0·2 | −0·1 |
| 45 | −0·6 | −0·5 | 70 | 0·0 | +0·1 |
| 50 | −0·5 | −0·4 | 76 | +0·1 | +0·2 |
| 55 | −0·5 | −0·4 | 79 | 0·0 | +0·2 |

The observations of the dry and wet bulb thermometers, given pages 172–308, are *not* corrected for the errors of the thermometers; but the corrections have been applied to the abstracts of results, pages 404—412.

92. The maximum and minimum self-registering thermometers, on RUTHERFORD'S construction, were made by ADIE and SON; they were attached to a frame fixed to the north side of the Observatory, about three feet from the ground, and near the dry and wet bulb thermometers. A self-registering mercurial thermome-

ter, with a black bulb, by R. ADIE, of Liverpool, was placed, in the end of May 1844, within the enclosed space occupied by the Observatory rain-gauge, exposed to the sun, for the purpose of obtaining the maximum amount of solar radiation; another self-registering alcohol thermometer, with black bulb by the same maker, was placed near the other in September 1844, with its bulb in the focus of a parabolic metallic reflector, for the purpose of obtaining the minimum of terrestrial radiation. The observations of the self-registering thermometers are given pages 310–312; they have all been corrected for the scale errors of the thermometers.

93. Another thermometer was employed for the determination of the temperature of the water in two pump-wells, which are within about 200 yards of each other; the pumps are nearly on the same surface-level, the depth of the cottage-well being 10 feet,—that of the garden-well 21 feet. On one occasion, it was found that there was one foot of water in the cottage-well, and two feet of water in the garden-well. In obtaining the temperature, the water was pumped till the reading of the thermometer remained constant. All the observations have been corrected for the scale error of the thermometer used.

## ACTINOMETER.

94. The actinometer was made by STEVENSON of Edinburgh; it consists of a hollow cylinder of glass filled with ammonio-sulphate of copper. One extremity of the cylinder is joined to a thermometer tube, terminating in a hollow bulb; the other extremity is cemented to a metallic cap, through which a screw, working in a collar of leather, passes into the cylinder; a scale of 100 divisions is attached to the thermometer tube; the whole is inclosed in a larger glass cylinder of two inches diameter. A portion of this cylinder, opposite the liquid, is inclosed by a segment of a metallic cylinder, blackened within. In making an observation, the inner cylinder was exposed to the sun's rays at a perpendicular incidence for 60 seconds, the scale readings of the fluid in the tube being observed at the beginning and end of the minute. A screen was then interposed for one minute, or for one minute and a half; if for one minute only, the last observation in the sun was also noted as the first in the shade; if for one minute and a half, the first reading in the shade was not made till the instrument was shaded half a minute. At the end of 60 seconds the scale reading was again observed, and the screen was removed, that reading being also noted as the first in the sun. When the liquid mounted near the top of the thermometer tube, the screw was withdrawn nearly half a revolution, when the liquid fell to near the bottom of the tube. The times were noted from a box-chronometer by DENT, No. 1665. In February 1844, the liquid in the cylinder was frozen while the instrument was in the Observatory, and the cylinder was broken. The following were the dimensions of this actinometer:—liquid cylinder, 5½ inches long; mean external diameter, 1·013 inch; mean internal diameter,

0·924 inch; thermometer tube, 6½ inches long; the mercury, filling 2·9 inches of the tube, weighed 11·5 grains, and 100 divisions of the scale are equal to 5·51 inches. The screw, which is of silver, is 2½ inches long, and has 25 threads to an inch, the diameter at the outer edge of the screw is 0·57 inch, and at the bottom of the screw is 0·53 inch in diameter; it was not possible to determine the amount of heat stopped by the outer cylinder, as both cylinders were screwed to the same end-piece.

95. In the summer of 1844, a new actinometer (with the old screw) was obtained from the same maker. The cylinder and thermometer tube were inclosed in a mahogany box, open at one side; the compartment containing the cylinder filled with the blue liquid is lined with black velvet, and is covered by a slip of plate-glass. The dimensions were as follow:—Glass cylinder, 5½ inches long; mean external diameter, about 1·05 inch; the mercury, filling four inches of the thermometer tube, weighed 16·7 grains; the length of 100 divisions of the scale are equal to 5·51 inches. The cylinder of this instrument was again destroyed in the winter of 1846–7, by the freezing of the liquid. The previous dimensions of the cylinder belonging to the actinometer, from June 1844 till February 1847, are considered to be very near the truth; they are, however, only given from the dimensions of the cylinder in the actinometer at present, which is of the same size. The actinometer was placed in a small revolving frame during observations after June 1844, by means of which the face of the actinometer was always presented to the perpendicular incidence of the sun's rays; at the end of the same table upon which the revolving frame was placed, a double wooden screen was hung by cords passing over pulleys; the instrument could be shaded or exposed to the sun by the observer instantaneously. The following are the results of series of observations for the amount of heat stopped by the plate-glass used in the instrument after June 1844, and marked A:—

| | | | Sc. Div. |
|---|---|---|---|
| 1846. June 1d 10h 16m A.M. | Mean time. | Glass plate A on; mean effect of sun in 60s | = 9·47 |
| 10 37 | ..... | off ..... | =12·04 |
| 10 56 | ..... | on ..... | = 9·70 |
| Mean effect of sun in 60s, glass plate A on | | | = 9·58 |

Proportion of whole heat stopped by the glass plate A, =0·204.

| | | | Sc. Div. |
|---|---|---|---|
| 1846. June 3d 9h 51m A.M. | Mean time. | Glass plate A on; mean effect of sun in 60s | = 9·29 |
| 10 12 | ..... | off ..... | =12·83 |
| 10 33 | ..... | on ..... | = 9·82 |
| 10 51 | ..... | off ..... | =12·88 |
| 11 10 | ..... | on ..... | =10·33 |
| Mean effect of sun in 60s, glass plate A off | | | =12·85 |
| Mean ..... | | on | = 9·81 |

Proportion of whole heat stopped by glass plate A, =0·237.

Giving the last result two values, we find, from both determinations,

Proportion of whole heat stopped by glass plate A, $=0{\cdot}226$.

96. Besides the breaking of the cylinders by the freezing of the liquid, the instrument has been rendered useless for good experiments several times by the deposition of a brownish oily sediment, which finds its way into the thermometer tube, and this though the liquid had been long prepared by the maker. When this deposition of sediment occurred, the instrument was sent to the maker to be cleaned; the observations, therefore, in this volume, are nearly unaffected by it.

## RAIN-GAUGES.

97. The Observatory rain-guage is placed in a space, enclosed by a paling on the top of the Observatory hill, with a good exposure on all sides. The funnel-mouth is 6·1 inches in diameter, 8 inches above the soil, and 218 feet above the level of the sea. The quantity of rain is measured at noon by pouring it into a glass tube, graduated with reference to the aperture of the funnel.

98. The monthly results of two other gauges are given in the abstracts. One is placed on the top of the greenhouse roof, 680 feet NNE. of the Observatory gauge; the funnel-mouth is 6·7 inches in diameter, it is connected with a graduated tube within the greenhouse, it is 18 feet from the ground, and 192 feet above the level of the sea. This gauge is sheltered to the E. and NE. by trees, and its indications are therefore less trustworthy, especially during easterly winds; the amount of rain received in the funnel is also affected by the gusts of wind deflected from the sloping roof.

99. The other gauge is in the middle of the Makerstoun garden, with a good exposure; the funnel-mouth is 6·7 inches in diameter, is $6\frac{1}{2}$ feet above the soil, 171 feet above the level of the sea, and about 620 feet N. by E. of the Observatory gauge. The funnel is connected with a graduated tube. The greenhouse and garden gauges were observed by Mr MACGALL, the head gardener, the former daily, the latter monthly.

## VANES AND ANEMOMETER.

100. The vane is placed on the north wall of the Observatory, and by means of a rod and geering-wheels it indicates the direction of the wind on a dial-plate within the building; this vane (occupying the position W′ in the plan, Plate I.) was found too heavy for light winds, and the directions of these were estimated for some time from a ribbon-vane. On July 6, 1844, a small vane formed of two crow feathers (one from each wing) placed back to back, was erected above the door of the Observatory. This vane was not connected with any dial-plate, and the direc-

tion of the wind could be estimated from it during the day only. On November 13, 1844, a larger vane was formed of four large feathers from a turkey's tail, this vane was mounted on a long and light fir-rod, which passed through the roof of the Observatory, and had an index attached to its lower extremity, which indicated the direction of the wind on a compass fixed to the ceiling of the Observatory. This vane indicated the direction of the lightest winds, and the direction of the wind was generally taken from it after November 13, 1844. The direction of the wind is indicated in this volume by the *number* of the point of the compass, reckoning N = 0, E = 8, S = 16, W = 24.

101. The anemometer, the invention of Mr R. ADIE, of Liverpool, was made by Messrs ADIE and SON, of Edinburgh; it occupies the north-east corner of the Observatory. This instrument will be best understood by a reference to the annexed figure: *a* is a cistern containing water to the level *b*, *c* being a turn-cock for letting the water off to the exact level, and *d* a glass-gauge to shew when the water becomes too low, from evaporation or otherwise; an inverted vessel *e* is suspended in the water by a cord passing over the wheel *f*, whose axle rests on friction-rollers at *g* and *h*; *i* is a spiral, which has a cord wrapped on it carrying a weight *k*, which balances the vessel *e*; *l* is a dial, graduated on the face near the circumference; *m* an index, attached to the common axle of the wheel and spiral; *n* a loose index under the index *m*, which the latter carries forward by means of a projecting pin near the extremity; *o* a tube passing under the cistern *a*, which, entering the bottom, proceeds upwards within the vessel *e* till its open extremity is above the level of the water in a neck of the vessel *e*; the other end of the tube *o* is six feet above the outer wall of the Observatory, where it is capped by a vane *p*; at the top of the tube *o* three brass rods are joined, which carry a small tube in which a pin within the top piece *q* rests or turns; the tube *o* is double at the top, containing between the tubes a quantity of mercury to the level *r*, the continuation of the cylindrical body of

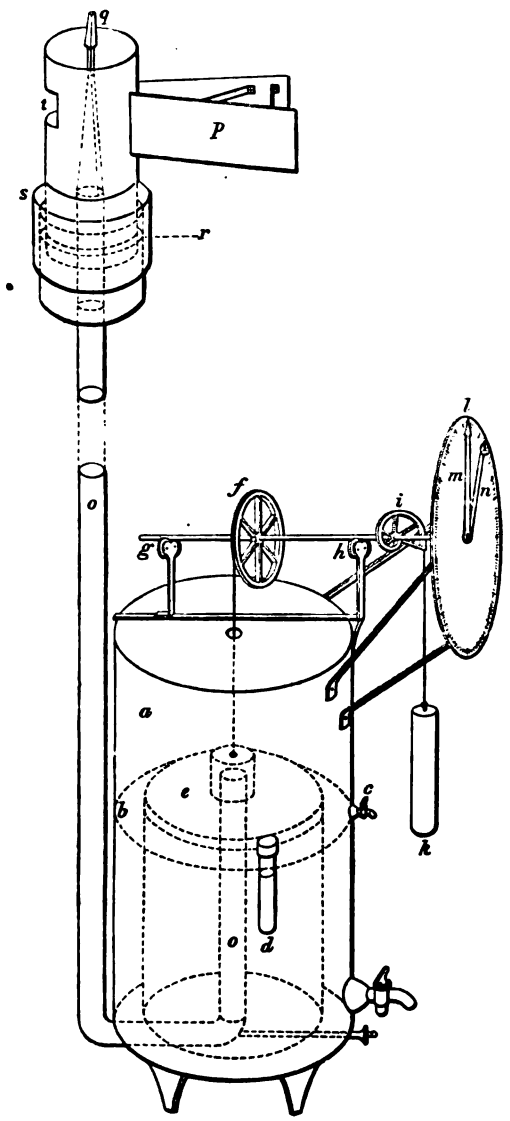

the vane enters the mercury, and a double portion *s* acts as an outer cover to the mercury cistern; *t* is an aperture, 2 inches square. When the wind blows, this aperture is presented to it, the wind then presses on the column of air within the tube *o* (being prevented from escaping under the vane by the mercury), and ultimately on the top surface of the vessel *e*, forcing the latter up, turning the axle carrying the index *m*, which carries before it the index *n*, leaving it at its farthest excursion. The dial is graduated as follows:—The surface of the top of the vessel *e* on which the wind presses is 78 square inches, therefore a pressure of 1 lb. on this surface is equivalent to $\frac{144}{78}$ lb. on a square foot. Different weights are suspended on the wheel *f*, acting oppositely to the vessel *e*, and the position of the index for each weight shews the pressure on a square foot of surface equal to the weight suspended multiplied by the above ratio. The spiral, on which the weight *k* acts, is the involute of a circle whose radius $r = \frac{R}{2\pi}$ where R is the radius of the wheel *f*, and $2\pi$ is the circumference to radius of one, if the vessel *e* were homogeneous throughout its depth, the equal increments of motion in the index would correspond to equal increments of pressure.*

102. The instrument is observed in the following manner:—About $2^m$ before the observation hour the pressure shewn by the index *n* is registered as the maximum pressure; this index is then put back to zero, and from $7^m$ to $10^m$ afterwards, the position to which it has again been carried by the index *m* is noted as the present pressure; the index *n* is then set to zero, and a similar double observation made at the next observation hour. It is conceived that this instrument can be depended on for the purpose of determining the laws of variation of the pressure of wind; for absolute results, an integrating instrument is essential.

## STATE OF THE SKY.

103. The extent of sky clouded is estimated; the whole sky covered with clouds being noted as 10, and the complete absence of clouds as zero. The motions of the clouds are determined as follows:—A well-marked portion of cloud which passes, or has passed, through the zenith, is watched till the direction is found in which it seems to run down, or parallel to, one corner of the Observatory; the walls of the

* The application of the involute of the circle as the spiral is due, I believe, to Professor FORBES. It is easily shewn that if the vessel *e* be homogeneous, *w* being the weight of a ring whose depth is one inch, P the pressure which the wind exerts on the top of *e* diminishing its weight, $\beta$ the corresponding arc through which the circumference of the wheel *f* moves (or the length of cord wrapped on the wheel), W the weight of the counterpoise *k*, and $\sigma$ the specific gravity of the material (zinc) of which *e* is formed, then

$$\frac{P}{\beta} = \frac{W}{2\pi} + \frac{w}{\sigma}$$

a constant ratio.

Observatory are in the meridian and prime vertical, and the points of the compass, reckoning from each corner as a centre, are marked upon the paling surrounding the Observatory; the observer, therefore, sees at once the direction of motion of the cloud on the paling; when a portion of cloud cannot be seen which has passed, or is about to pass, through the zenith, it is generally easy to determine very nearly the vanishing point of the motion of any portion of cloud, by watching its progress for a short period; there can be no hesitation in saying, that the motions of the upper currents of air thus observed, are better determined than the motion of the lower or surface current observed from the vane. The directions of motion of the clouds in three strata (scud, including cumuli; cirro-stratus, including cirro-cumuli; and cirri), are given in numbers of points of the compass, reckoning N = 0, E = 8, S = 16, W = 24. The nomenclature adopted is that of Mr HOWARD, with certain combinations, which are, in general, sufficiently descriptive.

104. After June 30, 1844, full sunshine is indicated in the column of meteorological remarks by the symbol ⊙; when the sun shone through a cloud so as to project a distinct shadow, it is indicated by the symbol ⊖; when the cloud was very thin, this was indicated occasionally by the symbol ⦶; and when the sun's disc only was visible, the symbol ● is used; similar symbols are used for the moon.

105. The heaviness of the rain falling at the time of observation has been estimated after May $10^d$, and is noted in the column of meteorological remarks, upon the supposition that the heaviest fall is 10: thus, $rain^8$, is rather heavy rain; $rain^7$, is the heaviest observed in 1844; $rain^{0\cdot1}$, is just perceptible; and $rain^{0\cdot5}$, is a light, spitting, Scotch mist.

## CLOCK.

106. The mean time clock is by DENT of London; it is kept at Göttingen mean time by comparisons with the transit clocks in the Astronomical Observatory, the errors of which are determined by Sir THOMAS BRISBANE, by myself, or by Mr WELSH. The rate of the clock is kept small.

## DESCRIPTION OF THE TABLES OF OBSERVATIONS.

107. *Hourly Observations of Magnetometers*, pages 1–69.

The first column contains the Göttingen mean solar time, astronomical reckoning, of the observations of the declination magnetometer. Göttengen time is $49^m\ 50^s$ in advance of Makerstoun time. The second column gives the absolute westerly declination in degrees, minutes, and decimals of a minute, deduced as described, No. 17.

The third column contains the observations of the bifilar magnetometer in scale divisions, corrected for temperature to 26° Fahr., see Nos. 69 and 73; increasing numbers indicate increasing force. The bifilar is observed $2^m$ after the declination.

The fourth column contains the temperature of the bifilar magnet in degrees of Fahrenheit.

The fifth column gives the readings of the balance magnetometer in micrometer divisions, corrected for temperature to 26° Fahr., see No. 79; increasing numbers indicate increasing force. The balance is observed $3^m$ after the declination.

The sixth column contains the temperature of the balance magnet in degrees of Fahrenheit.

The seventh column contains the observer's initial, see No. 5.

At the foot of each page the time is given during which the declination magnet has remained untouched, or the amount of torsion found in the suspension thread when that has been determined, see No. 12. The value $k$ of one scale division of the bifilar magnetometer, the whole horizontal component being unity (see No. 38), and the value of $k$ of one micrometer division of the balance magnetometer, the whole vertical component being unity, are also given; the value of the latter given here, 0·0000085, was deduced from observations made in 1846 (see No. 59), and is erroneous, the true value is $k=0{\cdot}000010$ (see Nos. 58 and 59); this value has been used in the abstracts of results.

108. *Term-Day Observations of Magnetometers*, pages 72–89.

The first column contains the minute of Göttingen mean time of the declination observations, the hour being given in the middle of each triplet of columns.

The second and third columns contain the bifilar and balance magnetometer readings, reduced to the temperature of 26° Fahr., as in the hourly observations. The temperatures of the magnets at the commencement of each hour will be found with the hourly observations, and the observer's initial for each hour are in the same place. The corrections for temperature are applied to the observations in the following manner:—The correction to the first observation of each hour being applied for the known temperature of each magnet, the temperature is supposed to change uniformly throughout the hour, and the corrections for the intermediate observations are interpolated between the initial corrections.

109. *Extra Observations of Magnetometers*, pages 92–157.

These observations are made generally during magnetic disturbances. The same remarks apply with reference to temperature corrections, &c., as for the term-day observations, excepting that the Göttingen day and hour are given in the first column, and the minute is given for the observations of each instrument. Notes upon the Auroræ boreales observed are given, with the times of the phenomena in Göttingen mean time.

110. *Observations of Magnetic Dip*, and *for the Absolute Horizontal Intensity*. See Nos. 19, &c., and 84.

111. *Hourly Meteorological Observations*, pages 172–308.

The first column contains the day and hour, Göttingen mean time, of the observations, all of which are made within a few minutes of the hour, and generally in

the order noted below. The Göttingen mean time is $49^m\ 50^s$ in advance of the Makerstoun time. The second column gives the height of the barometer, corrected to 32° Fahr., see No. 88. The barometer is generally observed between the observations of the declination and bifilar magnetometers, that is, about $70^s$ after the hour.

The third and fourth columns give the *observed* readings of the dry and wet bulb thermometers in degrees of Fahrenheit, *uncorrected* for scale errors, see No. 91, and the fifth column gives the difference of the observed readings of the two thermometers. The dry and wet bulb thermometers are generally read about $1\frac{1}{2}^m$ before the hour. The sixth column contains the maximum pressure of wind on a square foot of surface which has occurred since the previous observation, see No. 102; this maximum is generally noted, and the index set back $2^m$ or $1^m$ before the hour.

The seventh column contains the maximum pressure of wind on a square foot of surface within from $8^m$ to $10^m$ at the time of observation, namely, from $2^m$ or $1^m$ before the hour till $6^m$ or $9^m$ after the hour.

The eighth column contains the direction of the wind read from the dial-plate of the vane, and given in numbers of points of the compass, reckoning N = 0, E = 8, S = 16, W = 24.

The ninth column gives the directions of motion of three strata of clouds in numbers of points of the compass, namely, of scud, cirro-stratus, and cirrus; thus, September $25^d\ 2^h$, the surface wind, by the vane, blowing from 22 (WSW.), the scud was moving from 24 (W.), the cirro-cumulo-stratus was moving from 27 (NW. by W.), and the cirri were moving from 30 (NNW), see No. 103.

The tenth column contains the estimated extent of sky clouded, the whole hemisphere covered being 10.

The eleventh column contains the species of clouds observed, with other meteorological notes, see Nos. 103, 104, and 105.

The observer's initial will be found at the corresponding hour of hourly magnetical observations.

112. *Daily Meteorological Observations*, pages 310–312.

The first column contains the civil day of observation, and the first column of each triplet of columns thereafter contains the minimum temperature noted from the self-registering thermometer about $10^h$ A.M.; the second column contains the maximum temperature noted from the self-registering thermometer at $5^h$ P.M., see No. 92; and the third column contains the amount of rain found at noon in the Observatory rain-gauge. In page 311, the temperature of water in two pump-wells is given, see No. 93. In page 312 are given the maximum temperature of solar radiation, and the minimum temperature of terrestrial radiation for portion of the year, see No. 92.

113. *Extra Meteorological Observations*, pages 313–325.

The first column of observations of the actinometer contains the Makerstoun

mean time of the first reading given in the third column, the reading in the fourth column being made 60 seconds after; the second column tells whether both of these observations have been made with the actinometer in the sun or in the shade; the fifth column gives the change of reading in 60"; the sixth column contains the effect of the sun in changing the reading; the seventh column contains the mean effect for a group; and the eighth column contains the sun's altitude for the mean time corresponding to the middle of each group.

The readings of the barometer (corrected to 32° Fahr.) and of the dry and wet bulb thermometers, together with meteorological remarks, are given in the foot-notes; other observations will be found in their proper places among the hourly observations.

114. Additional meteorological notes are given after the observations of the actinometer; these consist of observations of shooting stars, thunder-storms, auroral clouds, dates of flowering of plants, times of the commencement of the morning-song of birds, &c.

115. *Abstracts of Results*, pages 329–447.

These Tables have appended or prefixed to them all requisite explanations, together with remarks on the conclusions deduced.

116. *Curves of Term-Day Observations, &c.*

The term-day observations, as corrected, pages 72–89, having been projected and drawn with the greatest accuracy by Mr WELSH on lithographed curve paper, they have been transferred by the anastatic process, in 12 Plates, given at the end of the volume; the remaining plates similarly drawn and transferred are Plate XIV., containing the projections of the daily means of the observations of the three magnetometers as given Table I., page 330, Table XXII. (in scale divisions), page 355, and Table XXXVIII. (in micrometer divisions), page 373. The projected means for the horizontal component exhibit the law of variation for the relative positions of the sun, moon, and earth (the moon's age being the argument), in several lunations, see page 358. Full moon is indicated at the head of the Plate by the symbol ○, new moon by ●.

Plate XV. contains the projections of the diurnal ranges of the three magnetometers, from Table III., p. 335, Table XXIV. (in scale divisions), page 359, and Table XL. (in micrometer divisions), page 376: it also contains the projections of the approximate daily mean disturbances for each instrument, that is, the mean differences of a single observation in each day from the monthly mean for the corresponding hour, as obtained from Table XIV., page 346, Table XXXIV., page 368, and Table L., page 385. The projections on this Plate also exhibit the laws of variation with reference to the moon's age.

Plate XVI. contains the projections of the hourly means for magnetical and meteorological observations. The hourly means obtained from all the magnetical observations are projected in continuous lines; those obtained from the 60 days in the year most free from intermittent disturbances (see page 338) are projected in

dotted lines. The declination, from the last column of Table V., page 337, and of Table IX., page 340. The horizontal component, from the last column of Table XXVI., page 360, and of Table XXIX., page 362. The vertical component, from the last column of Table XLII., page 378, and of Table XLV., page 380. The inclination, from the last column of Table LV., page 391, and from line 19, page 392. The total force, from the last column of Table LVIII., page 396, and from line 19, page 397.

The meteorological curves are projected from the following Tables:—

The barometer, from the last column of Table XXII., page 423.

The temperature of the air, from the last column of Table III., page 407.

The pressure of aqueous vapour, from the last column of Table XIII., page 415.

The relative humidity, from the last column of Table XVII., page 418.

The pressure of wind, from the last column of Table XXXII., page 430.

The direction of the resultant pressure of wind, from the last column of Table XXXVI., page 439.

The extent of clouded sky, from the last column of Table XLI., page 444.

---

All the reductions connected with the quantities given in this volume have been made by my assistants, Messrs WELSH and HOGG, and by myself: each computation has been performed twice at least, and that generally by different individuals.

# HOURLY OBSERVATIONS

OF

# MAGNETOMETERS.

MAKERSTOUN OBSERVATORY,

1844.

| Göttingen Mean Time of Declination Obs. | Declination. | Bifilar. | | Balance. | | Observer's Initial. |
|---|---|---|---|---|---|---|
| | | Corrected. | Thermometer. | Corrected. | Thermometer. | |
| d. h. m. | ° ′ | Sc. Div. | ° | Mic. Div. | ° | |
| 0 13 0 | 25 19·51 | 518·3 | 42·6 | 794·4 | 42·5 | B |
| 14 0 | 17·53 | 517·7 | 42·2 | 790·3 | 42·0 | B |
| 15 0 | 18·20 | 517·6 | 41·8 | 794·1 | 41·5 | B |
| 16 0 | 18·13 | 518·7 | 41·3 | 793·7 | 41·0 | B |
| 17 0 | 17·87 | 519·0 | 40·8 | 789·3 | 40·5 | B |
| 18 0 | 18·03 | 519·9 | 40·3 | 791·6 | 40·0 | B |
| 19 0 | 18·43 | 520·6 | 39·8 | 793·0 | 39·4 | B |
| 20 0 | 18·79 | 522·9 | 39·3 | 789·2 | 39·0 | B |
| 21 0 | 18·45 | 522·4 | 38·9 | 789·5 | 38·5 | W |
| 22 0 | 19·21 | 518·3 | 38·6 | 785·4 | 38·3 | H |
| 23 0 | 19·49 | 517·9 | 38·3 | 799·8 | 38·3 | H |
| 1 0 0 | 22·08 | 516·2 | 38·2 | 797·5 | 38·3 | H |
| 1 0 | 24·20 | 516·4 | 38·2 | 803·2 | 38·4 | H |
| 2 0 | 22·94 | 523·7 | 38·2 | 796·6 | 38·6 | H |
| 3 0 | 20·87 | 523·3 | 38·5 | 810·0 | 39·0 | H |
| 4 0 | 22·35 | 520·3 | 38·9 | 808·6 | 39·4 | H |
| 5 0 | 21·68 | 512·7 | 38·9 | 809·4 | 39·0 | H |
| 6 0 | 21·15 | 515·1 | 38·8 | 808·2 | 39·0 | B |
| 7 0 | 21·32 | 515·2 | 38·5 | 804·9 | 38·8 | H |
| 8 0 | 20·13 | 515·4 | 38·3 | 810·6 | 38·5 | H |
| 9 0 | 19·71 | 508·4 | 38·0 | 817·1 | 38·2 | H |
| 10 0 | 13·32 | 516·3 | 37·7 | 811·8 | 37·7 | B |
| 11 0 | 20·85 | 515·7 | 37·2 | 799·1 | 37·2 | W |
| 12 0 | 20·60 | 516·4 | 36·8 | 797·2 | 36·7 | W |
| 13 0 | 25 20·72 | 516·8 | 36·3 | 797·3 | 36·2 | W |
| 14 0 | 20·82 | 518·3 | 35·9 | 792·0 | 35·7 | W |
| 15 0 | 21·39 | 519·3 | 35·5 | 790·1 | 35·2 | W |
| 16 0 | 21·27 | 517·0 | 35·0 | 788·4 | 34·7 | W |
| 17 0 | 20·79 | 518·2 | 34·7 | 787·8 | 34·4 | W |
| 18 0 | 20·53 | 519·3 | 34·3 | 788·5 | 34·0 | W |
| 19 0 | 20·55 | 520·8 | 34·0 | 788·4 | 33·8 | W |
| 20 0 | 20·11 | 522·0 | 33·8 | 787·3 | 33·6 | W |
| 21 0 | 20·23 | 518·6 | 33·5 | 794·3 | 33·4 | H |
| 22 0 | 21·15 | 517·6 | 33·2 | 796·4 | 33·5 | H |
| 23 0 | 21·83 | 514·6 | 33·0 | 796·3 | 33·2 | H |
| 2 0 0 | 23·29 | 517·4 | 32·9 | 799·4 | 33·0 | H |
| 1 0 | 24·79 | 511·5 | 32·9 | 800·5 | 33·0 | H |
| 2 0 | 26·23 | 512·2 | 32·9 | 812·8 | 33·3 | H |
| 3 0 | 25.56 | 516·8 | 32·9 | 811·2 | 33·3 | H |
| 4 0 | 25·56 | 514·0 | 33·0 | 809·1 | 33·5 | H |
| 5 0 | 21·95 | 516·6 | 33·2 | 807·2 | 33·4 | H |
| 6 0 | 21·71 | 516·4 | 33·0 | 809·3 | 33·3 | W |
| 7 0† | 17·53 | 504·7 | 32·9 | 822·3 | 33·1 | W |
| 8 0† | 21·16 | 498·9 | 32·7 | 844·8 | 32·8 | W |
| 9 0† | 16·21 | 519·6 | 32·3 | 828·9 | 32·5 | W |
| 10 0† | 14·13 | 516·0 | 32·0 | 805·1 | 32·2 | W |
| 11 0 | 17·17 | 512·0 | 31·7 | 792·8 | 32·0 | H |
| 12 0 | 16·60 | 516·2 | 31·2 | 784·2 | 31·5 | H |
| 13 0 | 25 19·22 | 515·3 | 30·9 | 789·9 | 31·0 | H |
| 14 0 | 21·23 | 516·0 | 30·7 | 795·5 | 30·8 | H |
| 15 0 | 21·19 | 515·1 | 30·4 | 792·4 | 30·6 | H |
| 16 0 | 21·23 | 519·0 | 30·3 | 786·1 | 30·3 | H |
| 17 0 | 20·69 | 520·8 | 30·2 | 791·7 | 30·3 | H |
| 18 0 | 20·76 | 521·3 | 30·1 | 792·5 | 30·3 | H |
| 19 0 | 20·90 | 519·0 | 30·2 | 788·6 | 30·5 | H |
| 20 0 | 20·85 | 519·4 | 30·3 | 792·7 | 30·7 | H |

| Göttingen Mean Time of Declination Obs. | Declination. | Bifilar. | | Balance. | | Observer's Initial. |
|---|---|---|---|---|---|---|
| | | Corrected. | Thermometer. | Corrected. | Thermometer. | |
| d. h. m. | ° ′ | Sc. Div. | ° | Mic. Div. | ° | |
| 2 21 0 | 25 20·23 | 517·9 | 30·7 | 799·6 | 31·2 | B |
| 22 0 | 21·14 | 515·9 | 31·0 | 798·2 | 31·4 | B |
| 23 0 | 22·25 | 516·3 | 31·5 | 802·2 | 32·1 | W |
| 3 0 0 | 23·46 | 517·5 | 33·0 | 813·0 | 35·3 | B |
| 1 0 | 24·22 | 521·9 | 37·6 | 795·8 | 37·7 | W |
| 2 0 | 23·36 | 521·8 | 41·0 | 792·1 | 41·2 | B |
| 3 0 | 21·93 | 521·4 | 43·0 | 793·2 | 42·5 | W |
| 4 0 | 21·17 | 520·5 | 44·0 | 798·6 | 44·0 | B |
| 5 0 | 20·84 | 521·2 | 44·5 | 792·7 | 45·0 | B |
| 6 0 | 20·69 | 521·2 | 44·9 | 789·1 | 45·9 | H |
| 7 0 | 20·55 | 522·3 | 45·0 | 790·8 | 46·5 | H |
| 8 0 | 20·42 | 523·8 | 44·9 | 787·1 | 46·1 | H |
| 9 0 | 20·27 | 523·4 | 44·7 | 789·2 | 46·0 | H |
| 10 0 | 20·30 | 520·4 | 44·5 | 793·5 | 46·0 | H |
| 11 0 | 20·15 | 517·2 | 44·3 | 799·3 | 45·9 | B |
| 12 0 | 20·25 | 517·4 | 44·1 | 804·2 | 45·7 | B |
| 13 0† | 25 20·76 | 525·0 | 43·9 | 793·4 | 45·4 | B |
| 14 0† | 19·96 | 520·1 | 43·6 | 794·8 | 45·1 | B |
| 15 0 | 20·23 | 518·1 | 43·0 | 794·7 | 44·6 | B |
| 16 0 | 20·50 | 520·1 | 42·5 | 786·4 | 43·9 | B |
| 17 0 | 20·82 | 520·9 | 42·0 | 783·5 | 43·4 | B |
| 18 0 | 20·79 | 522·3 | 41·7 | 780·7 | 42·9 | B |
| 19 0 | 20·38 | 523·1 | 41·3 | 780·6 | 42·5 | B |
| 20 0 | 20·15 | 523·3 | 40·9 | 778·6 | 42·0 | B |
| 21 0 | 19·81 | 523·1 | 40·7 | 781·0 | 41·6 | W |
| 22 0 | 20·18 | 519·9 | 40·4 | 787·0 | 41·4 | W |
| 23 0 | 21·26 | 521·6 | 40·1 | 778·3 | 41·1 | W |
| 4 0 0 | 22·89 | 519·6 | 40·0 | 775·6 | 41·0 | W |
| 1 0 | 23·45 | 519·3 | 39·9 | 784·9 | 40·8 | W |
| 2 0 | 23·75 | 526·9 | 39·9 | 785·5 | 40·8 | W |
| 3 15 | 23·01 | 521·9 | 39·9 | 797·2 | 40·7 | W |
| 4 0 | 21·56 | 525·9 | 39·8 | 791·2 | 40·6 | W |
| 5 0 | 21·97 | 525·0 | 39·7 | 784·6 | 40·5 | W |
| 6 0 | 20·82 | 523·7 | 39·6 | 784·8 | 40·4 | B |
| 7 0 | 20·89 | 526·3 | 39·5 | 781·2 | 40·2 | B |
| 8 0 | 21·01 | 521·3 | 39·3 | 787·6 | 40·0 | B |
| 9 0† | 21·68 | 515·9 | 39·1 | 805·8 | 39·8 | B |
| 10 0† | 19·95 | 511·1 | 39·0 | 834·0 | 40·0 | B |
| 11 0† | 19·55 | 515·9 | 39·0 | 821·6 | 40·0 | W |
| 12 0 | 20·11 | 518·8 | 39·0 | 804·2 | 40·0 | W |
| 13 0 | 25 17·46 | 520·4 | 39·0 | 804·4 | 39·9 | W |
| 14 0 | 20·43 | 525·3 | 39·0 | 806·6 | 39·9 | W |
| 15 0 | 20·18 | 518·8 | 39·0 | 800·6 | 39·9 | W |
| 16 0† | 24·32 | 514·9 | 39·0 | 780·4 | 39·9 | W |
| 17 0† | 23·11 | 521·1 | 39·2 | 733·6 | 40·4 | W |
| 18 0 | 17·67 | 527·0 | 39·5 | 727·1 | 40·5 | W |
| 19 0 | 19·32 | 525·5 | 39·7 | 732·1 | 40·5 | W |
| 20 0 | 21·06 | 524·6 | 39·9 | 751·2 | 40·7 | W |
| 21 0 | 23·46 | 515·8 | 39·9 | 766·2 | 40·9 | H |
| 22 0† | 24·12 | 521·8 | 40·0 | 765·9 | 41·2 | H |
| 23 0† | 26·96 | 515·5 | 40·5 | 772·3 | 41·5 | H |
| 5 0 7† | 24·59 | 518·6 | 41·1 | 773·9 | 42·0 | H |
| 1 0† | 29·27 | 513·9 | 41·6 | 782·7 | 42·5 | H |
| 2 0† | 25·31 | 519·5 | 42·1 | 797·9 | 43·2 | H |
| 3 0 | 24·93 | 523·7 | 42·7 | 795·5 | 43·6 | H |
| 4 0 | 23·02 | 525·6 | 43·3 | 809·3 | 44·2 | H |

DECLINATION. Torsion removed,—Jan. $1^d\ 3^h$, + 2°. Effect of + 10° of Torsion = − 0′·84.
BIFILAR. Observed $2^m$ after the Declination, $k$=0·000140. BALANCE. Observed $3^m$ after the Declination, $k$=0·0000085.

† Extra Observations made.

| Göttingen Mean Time of Declination Obs. | Declination. | Bifilar. | | Balance. | | Observer's Initial. |
|---|---|---|---|---|---|---|
| | | Corrected. | Thermometer. | Corrected. | Thermometer. | |
| d. h. m. | ° ′ | Sc. Div. | ° | Mic. Div. | ° | |
| 5 5 0 | 25 23·09 | 518·9 | 43·8 | 804·8 | 44·5 | H |
| 6 0† | 20·05 | 523·8 | 44·3 | 818·7 | 45·0 | W |
| 7 0† | 18·88 | 519·0 | 44·8 | 812·3 | 45·6 | W |
| 8 0† | 10·56 | 503·4 | 45·2 | 841·5 | 46·5 | W |
| 9 0† | 17·06 | 514·9 | 45·7 | 812·1 | 47·1 | W |
| 10 0† | 13·76 | 525·1 | 46·0 | 805·3 | 47·5 | W |
| 11 0† | 19·93 | 521·1 | 46·3 | 767·5 | 47·5 | H |
| 12 0† | 21·16 | 514·1 | 46·4 | 778·0 | 47·5 | H |
| 13 0 | 25 21·53 | 515·8 | 46·4 | 784·5 | 47·3 | H |
| 14 0 | 21·53 | 514·7 | 46·3 | 829·6 | 47·3 | H |
| 15 0† | 20·49 | 513·0 | 46·2 | 780·6 | 47·1 | H |
| 16 0† | 26·82 | 517·9 | 46·2 | 762·1 | 47·1 | H |
| 17 0† | 20·60 | 516·1 | 46·2 | 769·6 | 47·0 | H |
| 18 0† | 18·63 | 523·3 | 46·2 | 768·5 | 47·2 | H |
| 19 0† | 26·07 | 511·7 | 46·1 | 774·5 | 47·0 | H |
| 20 0† | 24·26 | 520·9 | 46·0 | 769·7 | 47·0 | H |
| 21 0 | 21·74 | 519·3 | 46·0 | 778·4 | 46·7 | B |
| 22 0 | 23·98 | 514·1 | 45·9 | 781·8 | 46·5 | B |
| 23 0† | 25·11 | 501·7 | 45·7 | 794·6 | 46·3 | W |
| 6 0 0† | 24·66 | 508·3 | 45·6 | 794·7 | 46·1 | B |
| 1 0† | 24·59 | 516·3 | 45·5 | 790·9 | 46·0 | B |
| 2 0† | 22·69 | 517·7 | 45·5 | 797·5 | 46·0 | W |
| 3 0 | 23·61 | 522·2 | 45·6 | 803·1 | 46·2 | W |
| 4 0† | 17·33 | 507·2 | 45·7 | 827·6 | 46·3 | W |
| 5 0† | 21·56 | 523·3 | 45·9 | 814·3 | 46·4 | W |
| 6 0† | 23·18 | 519·9 | 46·0 | 806·2 | 46·9 | H |
| 7 0† | 18·21 | 520·9 | 46·0 | 796·3 | 47·0 | H |
| 8 0† | 20·96 | 520·1 | 46·0 | 789·7 | 46·8 | H |
| 9 0† | 03·02 | 539·5 | 45·9 | 778·9 | 46·3 | H |
| 10 0† | 13·67 | 514·2 | 45·7 | 767·0 | 46·3 | H |
| 11 0† | 18·84 | 511·5 | 45·6 | 777·9 | 46·2 | B |
| 12 0† | 20·38 | 517·8 | 45·4 | 766·9 | 46·0 | B |
| 7 13 0 | 25 20·96 | 517·8 | 41·1 | 756·2 | 41·2 | W |
| 14 0† | 19·98 | 517·7 | 40·9 | 776·7 | 41·0 | W |
| 15 0† | 21·84 | 517·0 | 40·8 | 787·2 | 40·8 | W |
| 16 0† | 21·32 | 517·6 | 40·6 | 789·8 | 40·7 | W |
| 17 0 | 21·39 | 516·3 | 40·3 | 778·2 | 40·5 | W |
| 18 0 | 21·39 | 517·6 | 40·0 | 781·1 | 40·2 | W |
| 19 0 | 23·41 | 520·7 | 39·9 | 780·9 | 40·0 | W |
| 20 0 | 20·74 | 520·7 | 39·8 | 785·3 | 39·9 | W |
| 21 0† | 20·62 | 520·6 | 39·6 | 793·5 | 39·8 | H |
| 22 0† | 20·25 | 516·5 | 39·4 | 790·5 | 39·6 | H |
| 23 0 | 21·27 | 511·7 | 39.4 | 791·5 | 39·5 | B |
| 8 0 0 | 21·93 | 515·8 | 39·4 | 784·2 | 39·7 | H |
| 1 0 | 23·05 | 518·7 | 39·4 | 793·1 | 39·9 | H |
| 2 0 | 23·46 | 512·8 | 39·3 | 804·6 | 39·9 | B |
| 3 0 | 28·18 | 519·2 | 39·3 | 799·7 | 39·9 | H |
| 4 0 | 23·02 | 519·1 | 39·4 | 797·8 | 40·0 | H |
| 5 0 | 20·25 | 521·9 | 39·6 | 802·2 | 40·0 | W |
| 6 0† | 19·45 | 519·0 | 39·7 | 818·3 | 40·2 | W |
| 7 0† | 15·49 | 513·2 | 39·9 | 825·0 | 40·5 | W |
| 8 0† | 18·81 | 518·1 | 40·0 | 814·1 | 40·8 | W |
| 9 0† | 20·05 | 519·3 | 40·1 | 812·6 | 41·0 | W |
| 10 0† | 18·67 | 515·3 | 40·1 | 813·4 | 40·8 | W |
| 11 0† | 12·65 | 520·4 | 40·2 | 751·7 | 41·0 | H |
| 12 0† | 15·56 | 517·1 | 40·3 | 760·8 | 41·5 | H |

| Göttingen Mean Time of Declination Obs. | Declination. | Bifilar. | | Balance. | | Observer's Initial. |
|---|---|---|---|---|---|---|
| | | Corrected. | Thermometer. | Corrected. | Thermometer. | |
| d. h. m. | ° ′ | Sc. Div. | ° | Mic. Div. | ° | |
| 8 13 0 | 25 20·18 | 517·0 | 40·4 | 757·0 | 41·4 | H |
| 14 0 | 20·85 | 513·1 | 40·4 | 771·7 | 41·1 | H |
| 15 0 | 17·51 | 510·6 | 40·3 | 774·7 | 40·9 | H |
| 16 0 | 21·93 | 510·7 | 40·0 | 779·4 | 40·7 | H |
| 17 0 | 20·79 | 513·9 | 39·8 | 777·4 | 40·4 | H |
| 18 25 | 19·12 | 519·5 | 39·7 | 781·0 | 40·1 | H |
| 19 0† | 21·26 | 522·3 | 39·7 | 784·9 | 40·0 | H |
| 20 0† | 20·40 | 522·3 | 39·5 | 779·5 | 39·9 | H |
| 21 0† | 20·22 | 520·0 | 39·3 | 783·7 | 39·5 | B |
| 22 0 | 19·88 | 513·8 | 39·1 | 793·2 | 39·3 | B |
| 23 0 | 23·99 | 512·1 | 38·9 | 790·1 | 39·0 | B |
| 9 0 0 | 22·91 | 513·6 | 38·8 | 794·9 | 38·8 | B |
| 1 0 | 24·25 | 513·1 | 38·6 | 798·3 | 38·5 | B |
| 2 0† | 22·20 | 516·2 | 38·3 | 799·8 | 38·3 | B |
| 3 0† | 22·18 | 522·2 | 38·1 | 807·6 | 38·1 | B |
| 4 0† | 21·68 | 518·3 | 38·0 | 810·0 | 38·0 | B |
| 5 0† | 19·73 | 520·2 | 37·8 | 811·1 | 37·8 | B |
| 6 0† | 18·68 | 509·7 | 37·6 | 817·1 | 37·7 | H |
| 7 0† | 23·34 | 512·2 | 37·4 | 819·5 | 37·5 | H |
| 8 0† | 16·60 | 518·8 | 37·4 | 792·9 | 37·9 | H |
| 9 0† | 15·36 | 510·1 | 37·4 | 792·1 | 37·9 | H |
| 10 0† | 20·02 | 512·1 | 37·3 | 793·3 | 37·9 | H |
| 11 0† | 15·58 | 514·9 | 37·2 | 791·8 | 37·5 | B |
| 12 0† | 18·95 | 515·6 | 37·1 | 799·6 | 37·6 | B |
| 13 0† | 25 20·18 | 513·9 | 37·0 | 793·1 | 37·5 | B |
| 14 0† | 19·82 | 515·5 | 37·0 | 791·3 | 37·4 | B |
| 15 0† | 21·19 | 511·1 | 36·9 | 789·8 | 37·3 | B |
| 16 0† | 22·10 | 518·7 | 36·9 | 767·7 | 37·4 | B |
| 17 0† | 20·18 | 517·3 | 36·9 | 768·0 | 37·4 | B |
| 18 0† | 20·43 | 518·0 | 36·9 | 772·9 | 37·3 | B |
| 19 0† | 19·84 | 520·9 | 36·9 | 777·6 | 37·3 | B |
| 20 0† | 22·25 | 516·0 | 36·9 | 783·4 | 37·3 | B |
| 21 0† | 19·37 | 517·9 | 36·9 | 783·2 | 37·3 | W |
| 22 0† | 22·40 | 516·5 | 36·9 | 788·0 | 37·3 | W |
| 23 0† | 21·03 | 515·1 | 36·9 | 798·3 | 37·5 | W |
| 10 0 0 | 21·53 | 514·1 | 37·0 | 795·7 | 37·6 | W |
| 1 0 | 22·27 | 515·5 | 37·2 | 795·7 | 37·8 | W |
| 2 0 | 22·00 | 515·4 | 37·6 | 800·0 | 38·0 | W |
| 3 0 | 22·47 | 517·0 | 38·0 | 807·0 | 38·5 | W |
| 4 0 | 28·13 | 524·1 | 39·0 | 797·1 | 39·4 | H |
| 5 0 | 22·45 | 523·8 | 40·0 | 800·2 | 40·0 | W |
| 6 0† | 21·26 | 523·2 | 39·9 | 798·2 | 40·2 | B |
| 7 0† | 23·24 | 518·2 | 39·8 | 800·7 | 40·3 | B |
| 8 0† | 24·19 | 514·9 | 39·7 | 809·5 | 40·5 | B |
| 9 0† | 21·46 | 517·8 | 39·8 | 816·1 | 40·5 | B |
| 10 0† | 20·29 | 515·0 | 39·9 | 821·9 | 40·7 | B |
| 11 0† | 19·02 | 516·2 | 40·0 | 807·3 | 41·0 | B |
| 12 0† | 14·70 | 509·1 | 40·1 | 788·3 | 41·4 | W |
| 13 0† | 25 19·02 | 512·9 | 40·3 | 799·2 | 41·5 | W |
| 14 0† | 17·26 | 517·9 | 40·5 | 792·5 | 41·5 | W |
| 15 0† | 19·28 | 517·7 | 40·6 | 788·2 | 41·5 | W |
| 16 0† | 20·85 | 515·7 | 40·6 | 785·3 | 41·4 | W |
| 17 0† | 21·97 | 517·3 | 40·6 | 787·7 | 41·3 | W |
| 18 0 | 21·03 | 518·8 | 40·6 | 787·5 | 41·1 | W |
| 19 0† | 21·29 | 517·8 | 40·5 | 786·8 | 41·0 | W |
| 20 0† | 22·60 | 517·3 | 40·4 | 784·5 | 41·0 | W |

DECLINATION. Magnet untouched, Jan. 1d—12d.

BIFILAR. Observed 2m after the Declination, $k = 0{\cdot}000140$. BALANCE. Observed 3m after the Declination $k = 0{\cdot}0000085$.

† Extra Observations made.

Jan. 10d 3h +. The inner box of the Bifilar Magnetometer replaced, having been removed since December 14, 1843.

| Göttingen Mean Time of Declination Obs. | | | Declination. | Bifilar. | | Balance. | | Observer's Initial. |
|---|---|---|---|---|---|---|---|---|
| | | | | Corrected. | Thermometer. | Corrected. | Thermometer. | |
| d. | h. | m. | ° ′ | Sc. Div. | ° | Mic. Div. | ° | |
| 10 | 21 | 0 | 25 21·03 | 518·9 | 40·3 | 778·5 | 41·0 | H |
| | 22 | 0 | 21·84 | 518·1 | 40·3 | 780·8 | 40·8 | H |
| | 23 | 0 | 22·37 | 517·5 | 40·2 | 783·0 | 40·8 | H |
| 11 | 0 | 0 | 23·12 | 516·4 | 40·2 | 782·6 | 41·0 | H |
| | 1 | 0 | 23·88 | 509·6 | 40·4 | 786·6 | 41·7 | H |
| | 2 | 0 | 24·25 | 514·9 | 41·0 | 781·9 | 42·7 | H |
| | 3 | 0 | 24·42 | 524·2 | 41·7 | 783·7 | 43·5 | H |
| | 4 | 0 | 22·84 | 521·3 | 42·3 | 784·9 | 44·1 | H |
| | 5 | 0 | 23·11 | 520·5 | 42·8 | 791·4 | 44·3 | H |
| | 6 | 0 | 22·13 | 522·3 | 43·1 | 791·9 | 44·4 | W |
| | 7 | 0 | 21·63 | 518·0 | 43·2 | 798·2 | 44·3 | W |
| | 8 | 0 | 21·19 | 516·7 | 43·3 | 802·3 | 44·0 | W |
| | 9 | 0 | 22·84 | 519·3 | 43·1 | 798·4 | 43·9 | W |
| | 10 | 0 | 20·90 | 519·4 | 43·0 | 795·4 | 43·8 | W |
| | 11 | 0 | 20·18 | 517·4 | 43·0 | 794·3 | 43·7 | H |
| | 12 | 0† | 17·68 | 516·1 | 42·9 | 796·8 | 43·9 | H |
| | 13 | 0 | 25 19·29 | 508·1 | 42·9 | 795·2 | 44·0 | H |
| | 14 | 0 | 16·41 | 515·0 | 43·0 | 791·4 | 44·0 | H |
| | 15 | 0 | 20·23 | 517·2 | 42·9 | 786·8 | 43·9 | H |
| | 16 | 0 | 19·49 | 519·0 | 43·0 | 787·6 | 43·9 | H |
| | 17 | 0 | 21·39 | 518·3 | 43·0 | 784·4 | 43·7 | H |
| | 18 | 0 | 20·97 | 518·7 | 43·1 | 785·8 | 43·7 | H |
| | 19 | 0 | 21·23 | 518·2 | 43·1 | 785·3 | 43·8 | H |
| | 20 | 0 | 21·03 | 516·8 | 43·1 | 785·3 | 43·9 | H |
| | 21 | 0 | 20·85 | 516·5 | 43·1 | 785·8 | 43·9 | B |
| | 22 | 0 | 20·76 | 516·9 | 43·1 | 782·4 | 43·9 | B |
| | 23 | 0 | 21·03 | 516·1 | 43·1 | 782·7 | 43·9 | W |
| 12 | 0 | 0 | 22·91 | 517·0 | 43·1 | 779·2 | 43·9 | W |
| | 1 | 0 | 23·01 | 517·8 | 43·2 | 780·1 | 44·0 | W |
| | 2 | 0 | 22·82 | 519·2 | 43·3 | 784·2 | 44·0 | W |
| | 3 | 0 | 21·37 | 518·1 | 43·4 | 795·2 | 44·1 | W |
| | 4 | 0 | 20·69 | 513·7 | 43·6 | 799·3 | 44·1 | W |
| | 5 | 0 | 20·80 | 520·0 | 43·6 | 801·7 | 44·2 | W |
| | 6 | 0 | 22·03 | 521·1 | 43·5 | 795·6 | 44·3 | H |
| | 7 | 0 | 20·99 | 521·4 | 43·5 | 793·4 | 44·3 | H |
| | 8 | 0 | 20·49 | 520·0 | 43·4 | 792·6 | 44·0 | H |
| | 9 | 0† | 20·02 | 516·0 | 43·3 | 797·9 | 43·8 | H |
| | 10 | 0† | 12·72 | 524·5 | 43·3 | 787·5 | 43·7 | H |
| | 11 | 0† | 21·53 | 515·5 | 43·1 | 784·5 | 43·7 | H |
| | 12 | 0 | 20·29 | 515·7 | 43·0 | 786·0 | 43·3 | W |
| | 13 | 0 | 25 20·85 | 517·1 | 42·9 | 785·5 | 42·8 | W |
| | 14 | 0 | 20·49 | 518·1 | 42·5 | 784·5 | 42·3 | W |
| | 15 | 0 | 19·84 | 517·1 | 42·1 | 785·1 | 41·7 | W |
| | 16 | 0 | 19·24 | 519·6 | 41·8 | 783·1 | 41·2 | W |
| | 17 | 0 | 20·09 | 518·3 | 41·4 | 785·3 | 40·7 | W |
| | 18 | 0 | 20·16 | 517·3 | 41·0 | 785·7 | 40·1 | W |
| | 19 | 0 | 20·83 | 518·1 | 40·5 | 781·5 | 39·6 | W |
| | 20 | 0 | 20·72 | 519·9 | 40·0 | 782·5 | 39·0 | W |
| | 21 | 0 | 21·21 | 522·1 | 39·7 | 784·5 | 38·7 | H |
| | 22 | 0 | 21·79 | 519·1 | 39·2 | 792·5 | 38·4 | B |
| | 23 | 0 | 23·31 | 516·6 | 39·0 | 796·3 | 38·4 | H |
| 13 | 0 | 0 | 23·54 | 516·2 | 38·8 | 795·6 | 38·4 | B |
| | 1 | 0 | 23·25 | 520·0 | 38·7 | 797·0 | 38·7 | H |
| | 2 | 0 | 21·91 | 520·3 | 38·8 | 801·4 | 39·4 | H |
| | 3 | 0 | 20·43 | 522·7 | 39·1 | 803·8 | 40·0 | W |
| | 4 | 0 | 20·92 | 518·6 | 39·7 | 799·3 | 40·5 | W |

| Göttingen Mean Time of Declination Obs. | | | Declination. | Bifilar. | | Balance. | | Observer's Initial. |
|---|---|---|---|---|---|---|---|---|
| | | | | Corrected. | Thermometer. | Corrected. | Thermometer. | |
| d. | h. | m. | ° ′ | Sc. Div. | ° | Mic. Div. | ° | |
| 13 | 5 | 0 | 25 20·82 | 520·9 | 39·9 | 795·9 | 40·6 | W |
| | 6 | 0 | 20·58 | 522·1 | 40·0 | 795·2 | 40·6 | W |
| | 7 | 0 | 20·32 | 520·2 | 40·0 | 797·0 | 40·5 | W |
| | 8 | 0 | 19·95 | 517·0 | 40·0 | 800·8 | 40·3 | W |
| | 9 | 0 | 18·90 | 520·6 | 39·9 | 796·8 | 40·2 | W |
| | 10 | 0 | 18·21 | 522·4 | 39·9 | 792·9 | 40·0 | W |
| | 11 | 0 | 18·99 | 521·0 | 39·8 | 785·7 | 39·9 | W |
| | 12 | 0 | 20·08 | 519·2 | 39·6 | 783·0 | 39·6 | W |
| 14 | 13 | 0 | 25 20·92 | 514·8 | 37·9 | 791·0 | 37·5 | H |
| | 14 | 0 | 19·51 | 515·8 | 37·4 | 790·6 | 36·9 | H |
| | 15 | 0 | 19·41 | 516·6 | 37·0 | 790·9 | 36·4 | H |
| | 16 | 0 | 19·64 | 516·9 | 36·6 | 786·9 | 35·9 | H |
| | 17 | 0 | 19·51 | 518·8 | 36·2 | 785·9 | 35·3 | H |
| | 18 | 0 | 19·96 | 519·7 | 35·8 | 786·2 | 34·8 | H |
| | 19 | 0 | 20·02 | 520·0 | 35·3 | 787·5 | 34·2 | H |
| | 20 | 0 | 20·22 | 520·1 | 34·8 | 787·7 | 33·7 | H |
| | 21 | 0 | 20·47 | 518·0 | 34·3 | 790·8 | 33·1 | W |
| | 22 | 0 | 20·99 | 517·0 | 33·9 | 795·1 | 32·6 | W |
| | 23 | 0 | 21·57 | 514·6 | 33·5 | 796·9 | 32·4 | W |
| 15 | 0 | 0 | 22·87 | 514·5 | 33·1 | 797·3 | 32·4 | W |
| | 1 | 0 | 23·14 | 519·7 | 33·0 | 784·7 | 32·6 | W |
| | 2 | 0 | 22·75 | 523·2 | 33·0 | 789·9 | 33·1 | W |
| | 3 | 0 | 21·84 | 522·6 | 33·1 | 792·2 | 33·9 | W |
| | 4 | 0 | 21·23 | 521·7 | 33·6 | 789·2 | 34·0 | W |
| | 5 | 0 | 21·36 | 522·4 | 34·0 | 791·2 | 35·0 | W |
| | 6 | 0 | 20·76 | 522·0 | 34·4 | 789·8 | 35·3 | H |
| | 7 | 0 | 20·76 | 523·2 | 34·7 | 788·2 | 35·4 | H |
| | 8 | 0 | 20·47 | 523·3 | 34·9 | 788·6 | 35·5 | H |
| | 9 | 0 | 20·18 | 522·5 | 34·9 | 788·1 | 35·6 | H |
| | 10 | 0 | 19·78 | 522·7 | 34·9 | 788·6 | 35·3 | H |
| | 11 | 0 | 20·18 | 520·5 | 34·9 | 792·1 | 35·0 | B |
| | 12 | 0 | 17·60 | 520·5 | 34·7 | 789·8 | 34·9 | B |
| | 13 | 0 | 25 18·97 | 519·5 | 34·6 | 786·2 | 34·7 | B |
| | 14 | 0 | 18·37 | 513·8 | 34·4 | 786·5 | 34·6 | B |
| | 15 | 0 | 20·83 | 518·4 | 34·3 | 784·1 | 34·5 | B |
| | 16 | 0 | 19·44 | 519·6 | 34·2 | 783·6 | 34·4 | B |
| | 17 | 0 | 20·36 | 521·5 | 34·1 | 782·8 | 34·4 | B |
| | 18 | 0 | 20·67 | 522·5 | 34·1 | 783·1 | 34·4 | B |
| | 19 | 0 | 20·25 | 521·7 | 34·0 | 784·2 | 34·3 | B |
| | 20 | 0 | 19·79 | 520·9 | 34·0 | 787·5 | 34·1 | B |
| | 21 | 0 | 19·62 | 520·2 | 34·0 | 790·4 | 34·1 | H |
| | 22 | 0 | 20·08 | 518·0 | 33·8 | 794·8 | 34·0 | H |
| | 23 | 0 | 22·17 | 516·0 | 33·7 | 797·4 | 34·1 | H |
| 16 | 0 | 0 | 22·94 | 515·5 | 33·7 | 798·5 | 34·0 | H |
| | 1 | 0 | 24·82 | 520·6 | 33·6 | 794·6 | 34·0 | H |
| | 2 | 0 | 24·05 | 523·5 | 33·7 | 794·4 | 34·3 | H |
| | 3 | 0 | 22·00 | 524·4 | 33·9 | 791·1 | 34·6 | H |
| | 4 | 0 | 21·56 | 522·9 | 34·2 | 793·5 | 35·2 | H |
| | 5 | 0 | 21·53 | 521·1 | 34·4 | 789·2 | 35·3 | H |
| | 6 | 0 | 20·89 | 521·1 | 34·8 | 790·9 | 35·5 | B |
| | 7 | 0 | 20·67 | 521·9 | 34·9 | 791·4 | 35·5 | B |
| | 8 | 0 | 20·18 | 521·9 | 34·9 | 789·5 | 35·3 | B |
| | 9 | 0 | 19·76 | 521·7 | 34·9 | 791·2 | 35·2 | B |
| | 10 | 0 | 18·77 | 521·7 | 34·8 | 791·6 | 35·0 | B |
| | 11 | 0 | 18·75 | 519·6 | 34·6 | 785·4 | 34·7 | W |
| | 12 | 0 | 18·90 | 521·1 | 34·5 | 781·4 | 34·5 | W |

DECLINATION. Torsion removed,—Jan. 12d 2h, − 1½°. Effect of + 10° of torsion = − 0′·84.
BIFILAR. Observed 2m after the Declination $k = 0·000140$. BALANCE. Observed 3m after the Declination, $k = 0·0000085$.

† Extra Observations made.

| Göttingen Mean Time of Declination Obs. | Declination. | Bifilar. | | Balance. | | Observer's Initial. |
|---|---|---|---|---|---|---|
| | | Corrected. | Thermometer. | Corrected. | Thermometer. | |
| d. h. m. | ° ′ | Sc. Div. | ° | Mic. Div. | ° | |
| 16 13 0 | 25 20·79 | 522·3 | 34·3 | 776·5 | 34·3 | W |
| 14 0 | 20·79 | 519·1 | 34·1 | 782·1 | 34·3 | W |
| 15 0 | 18·60 | 516·3 | 34·0 | 783·0 | 34·3 | W |
| 16 0 | 21·01 | 519·3 | 34·0 | 783·6 | 34·3 | W |
| 17 0 | 19·95 | 523·4 | 34·0 | 782·4 | 34·4 | W |
| 18 0 | 20·52 | 522·4 | 34·0 | 782·3 | 34·4 | W |
| 19 0 | 20·09 | 522·5 | 34·0 | 781·4 | 34·5 | W |
| 20 0 | 19·42 | 523·5 | 34·0 | 782·3 | 34·6 | W |
| 21 0 | 19·44 | 521·2 | 34·1 | 790·2 | 34·8 | B |
| 22 0 | 20·18 | 519·0 | 34·3 | 792·6 | 34·9 | B |
| 23 0 | 21·68 | 517·3 | 34·4 | 790·7 | 35·2 | H |
| 17 0 0 | 24·45 | 515·0 | 34·7 | 795·6 | 35·5 | B |
| 1 0 | 25·91 | 518·1 | 35·0 | 793·2 | 36·1 | B |
| 2 0 | 26·14 | 522·1 | 35·5 | 785·4 | 36·9 | B |
| 3 0 | 23·76 | 523·6 | 36·1 | 781·8 | 37·8 | B |
| 4 0 | 22·27 | 525·1 | 38·2 | 786·7 | 38·7 | B |
| 5 0 | 20·83 | 524·0 | 38·3 | 785·4 | 39·2 | B |
| 6 0 | 21·16 | 524·0 | 38·6 | 787·7 | 39·5 | W |
| 7 0 | 21·26 | 522·2 | 38·7 | 788·6 | 39·6 | W |
| 8 0† | 21·68 | 516·9 | 38·7 | 792·4 | 39·5 | W |
| 9 0† | 19·26 | 519·4 | 38·7 | 801·0 | 39·5 | W |
| 10 0 | 19·76 | 518·8 | 38·7 | 795·4 | 39·3 | W |
| 11 0 | 19·48 | 521·4 | 38·6 | 788·9 | 38·9 | B |
| 12 0 | 19·55 | 521·2 | 38·3 | 785·2 | 38·6 | B |
| 13 0 | 25 19·51 | 520·0 | 38·1 | 786·4 | 38·3 | B |
| 14 0 | 19·81 | 519·5 | 37·9 | 783·9 | 38·0 | B |
| 15 0 | 20·23 | 519·3 | 37·7 | 781·2 | 37·7 | B |
| 16 0 | 20·30 | 518·9 | 37·4 | 782·0 | 37·5 | B |
| 17 0 | 20·50 | 520·1 | 37·2 | 778·2 | 37·3 | B |
| 18 0 | 19·93 | 521·0 | 37·0 | 775·9 | 37·2 | B |
| 19 0 | 19·95 | 521·6 | 37·0 | 774·5 | 37·0 | B |
| 20 0 | 19·46 | 521·8 | 36·9 | 778·1 | 37·0 | B |
| 21 0 | 19·28 | 519·7 | 36·7 | 778·2 | 37·0 | W |
| 22 0 | 19·58 | 521·3 | 36·7 | 781·4 | 36·9 | W |
| 23 0 | 20·49 | 518·5 | 36·7 | 788·9 | 37·4 | W |
| 18 0 0 | 22·47 | 518·6 | 37·0 | 794·3 | 38·2 | W |
| 1 0 | 24·22 | 517·9 | 37·8 | 793·2 | 39·3 | W |
| 2 0 | 24·72 | 521·7 | 38·5 | 790·6 | 40·1 | W |
| 3 0 | 24·75 | 524·1 | 39·2 | 793·4 | 41·0 | W |
| 4 0 | 27·10 | 522·1 | 40·0 | 792·9 | 41·7 | W |
| 5 0 | 26·30 | 522·7 | 40·8 | 791·8 | 42·2 | W |
| 6 0 | 19·98 | 519·1 | 41·1 | 816·8 | 42·5 | B |
| 7 0 | 20·89 | 523·3 | 41·4 | 792·8 | 42·8 | H |
| 8 0 | 19·88 | 521·7 | 41·7 | 785·3 | 43·0 | H |
| 9 0 | 19·55 | 522·3 | 41·8 | 777·0 | 43·2 | H |
| 10 0 | 19·51 | 519·2 | 42·0 | 779·9 | 43·2 | W |
| 11 0† | 13·49 | 517·1 | 42·1 | 780·9 | 43·2 | B |
| 12 0† | 19·41 | 516·8 | 42·2 | 770·5 | 43·5 | H |
| 13 0† | 25 20·85 | 515·9 | 42·7 | 769·5 | 44·3 | H |
| 14 0† | 20·18 | 518·8 | 42·9 | 769·9 | 44·5 | H |
| 15 0 | 20·49 | 519·9 | 43·2 | 768·9 | 44·5 | H |
| 16 0 | 20·03 | 519·7 | 43·3 | 767·0 | 44·4 | H |
| 17 0 | 19·78 | 519·1 | 43·2 | 762·6 | 44·1 | H |
| 18 0 | 20·76 | 522·3 | 43·2 | 762·4 | 44·0 | H |
| 19 0 | 20·08 | 522·2 | 43·0 | 762·5 | 43·7 | H |
| 20 0 | 19·93 | 520·7 | 42·9 | 763·7 | 43·5 | H |
| 18 21 0 | 25 19·31 | 519·2 | 42·8 | 768·9 | 43·2 | B |
| 22 0 | 19·58 | 518·7 | 42·6 | 771·4 | 43·0 | B |
| 23 0 | 20·35 | 517·8 | 42·5 | 769·9 | 43·0 | W |
| 19 0 0 | 21·59 | 517·4 | 42·3 | 775·2 | 42·9 | B |
| 1 0 | 23·04 | 520·2 | 42·3 | 778·6 | 42·9 | B |
| 2 0 | 22·96 | 521·7 | 42·3 | 779·3 | 43·0 | B |
| 3 0 | 22·20 | 524·9 | 42·3 | 775·1 | 43·0 | B |
| 4 0 | 21·57 | 522·7 | 42·3 | 775·7 | 42·9 | B |
| 5 0 | 21·16 | 520·8 | 42·2 | 777·9 | 42·6 | B |
| 6 0 | 20·90 | 520·6 | 42·2 | 776·3 | 42·5 | H |
| 7 0 | 20·00 | 518·9 | 42·0 | 776·9 | 42·2 | H |
| 8 0 | 20·20 | 521·5 | 41·8 | 772·0 | 42·0 | H |
| 9 0 | 19·98 | 521·2 | 41·6 | 771·8 | 41·6 | H |
| 10 0 | 19·75 | 519·7 | 41·4 | 773·7 | 41·4 | H |
| 11 0 | 20·11 | 517·5 | 41·1 | 776·5 | 41·0 | W |
| 12 0 | 20·36 | 519·1 | 41·0 | 778·1 | 40·7 | W |
| 13 0 | 25 18·77 | 516·5 | 40·7 | 781·8 | 40·5 | W |
| 14 0 | 18·94 | 516·1 | 40·4 | 783·5 | 40·2 | W |
| 15 0 | 16·95 | 516·6 | 40·1 | 783·9 | 39·8 | W |
| 16 0 | 18·38 | 517·5 | 39·9 | 784·0 | 39·5 | W |
| 17 0 | 18·25 | 520·5 | 39·6 | 777·1 | 39·0 | W |
| 18 0 | 19·31 | 519·9 | 39·1 | 774·8 | 38·5 | W |
| 19 0 | 19·24 | 519·7 | 38·9 | 773·3 | 38·0 | W |
| 20 0 | 19·64 | 519·6 | 38·5 | 769·8 | 37·5 | W |
| 21 0 | 21·63 | 516·7 | 38·2 | 771·3 | 37·3 | H |
| 22 0 | 22·48 | 522·3 | 37·8 | 766·7 | 37·0 | H |
| 23 0 | 22·20 | 519·7 | 37·4 | 771·1 | 36·9 | H |
| 20 0 0 | 23·45 | 519·8 | 37·3 | 774·6 | 36·9 | H |
| 1 0 | 22·17 | 519·1 | 37·2 | 779·4 | 37·0 | H |
| 2 0 | 21·53 | 520·0 | 37·1 | 785·9 | 37·2 | H |
| 3 0 | 20·82 | 519·3 | 37·1 | 786·8 | 37·4 | H |
| 4 0 | 20·32 | 519·3 | 37·2 | 784·4 | 37·5 | H |
| 5 0 | 20·32 | 519·6 | 37·2 | 785·4 | 37·5 | H |
| 6 0 | 20·25 | 521·4 | 37·3 | 785·9 | 37·7 | W |
| 7 0 | 20·49 | 520·8 | 37·3 | 785·3 | 37·5 | W |
| 8 0 | 20·20 | 518·7 | 37·3 | 784·3 | 37·5 | W |
| 9 0 | 20·05 | 517·4 | 37·2 | 784·7 | 37·4 | W |
| 10 0 | 19·91 | 518·2 | 37·1 | 784·2 | 37·3 | W |
| 11 0† | 18·50 | 519·8 | 37·0 | 780·5 | 37·3 | H |
| 12 0† | 17·65 | 517·5 | 37·2 | 781·2 | 37·6 | H |
| 21 13 0 | 25 19·61 | 524·5 | 40·0 | 768·7 | 40·2 | B |
| 14 0 | 19·10 | 518·3 | 39·9 | 779·0 | 40·0 | B |
| 15 0 | 20·09 | 520·6 | 39·6 | 776·1 | 39·5 | B |
| 16 0 | 20·53 | 521·4 | 39·3 | 775·1 | 39·2 | B |
| 17 0 | 20·42 | 521·1 | 39·0 | 773·8 | 38·8 | B |
| 18 0 | 20·22 | 521·3 | 38·9 | 775·4 | 38·5 | B |
| 19 0 | 19·65 | 520·4 | 38·6 | 774·8 | 38·0 | B |
| 20 0 | 19·58 | 520·2 | 38·2 | 776·3 | 37·8 | B |
| 21 0 | 19·71 | 520·2 | 38·0 | 774·3 | 37·6 | W |
| 22 0 | 20·49 | 523·2 | 37·8 | 772·8 | 37·6 | H |
| 23 0 | 20·72 | 521·9 | 37·7 | 773·5 | 37·5 | W |
| 22 0 0 | 20·65 | 520·7 | 37·5 | 776·1 | 37·6 | H |
| 1 0 | 21·26 | 523·7 | 37·5 | 779·3 | 37·8 | H |
| 2 0 | 21·06 | 521·7 | 37·5 | 783·3 | 38·3 | H |
| 3 0† | 24·25 | 511·2 | 38·0 | 794·5 | 39·1 | H |
| 4 0† | 23·05 | 518·0 | 38·7 | 790·1 | 40·3 | H |

DECLINATION. Magnet untouched, Jan 12d—27d.

BIFILAR. Observed 2m after the Declination, $k$=0·000140. BALANCE. Observed 3m after the Declination, $k$=0·0000085.

† Extra Observations made.

| Göttingen Mean Time of Declination Obs. | | | Declination. | Bifilar. | | Balance. | | Observer's Initial. |
|---|---|---|---|---|---|---|---|---|
| | | | | Corrected. | Thermometer. | Corrected. | Thermometer. | |
| d. | h. | m. | ° ′ | Sc. Div. | ° | Mic. Div. | ° | |
| 22 | 5 | 0 | 25 23·27 | 521·8 | 39·4 | 797·5 | 40·8 | H |
| | 6 | 0† | 22·91 | 518·5 | 40·0 | 820·2 | 41·1 | B |
| | 7 | 0† | 22·10 | 513·2 | 40·3 | 828·1 | 41·6 | B |
| | 8 | 0† | 21·83 | 514·7 | 40·7 | 813·2 | 41·8 | B |
| | 9 | 0 | 19·32 | 517·4 | 40·9 | 791·2 | 41·7 | B |
| | 10 | 0 | 19·44 | 523·6 | 40·9 | 783·1 | 41·7 | B |
| | 11 | 0 | 20·00 | 517·7 | 40·9 | 784·1 | 41·6 | W |
| | 12 | 0 | 19·17 | 517·9 | 40·9 | 780·6 | 41·5 | W |
| | 13 | 0 | 25 19·58 | 519·0 | 40·9 | 779·7 | 41·5 | W |
| | 14 | 0 | 19·46 | 518·5 | 40·9 | 780·1 | 41·4 | W |
| | 15 | 0 | 19·69 | 518·3 | 40·8 | 782·3 | 41·3 | W |
| | 16 | 0 | 19·22 | 520·9 | 40·8 | 780·6 | 41·2 | W |
| | 17 | 0 | 19·08 | 522·6 | 40·7 | 773·1 | 41·0 | W |
| | 18 | 0 | 17·71 | 523·4 | 40·6 | 770·1 | 40·9 | W |
| | 19 | 0 | 18·30 | 523·6 | 40·5 | 770·2 | 40·8 | W |
| | 20 | 0 | 18·94 | 522·9 | 40·4 | 757·7 | 40·7 | W |
| | 21 | 0 | 20·67 | 523·7 | 40·2 | 763·0 | 40·5 | B |
| | 22 | 0 | 21·51 | 527·6 | 40·1 | 759·7 | 40·4 | B |
| | 23 | 0 | 22·10 | 524·2 | 40·0 | 762·3 | 40·4 | B |
| 23 | 0 | 0 | 21·76 | 518·6 | 40·0 | 774·8 | 40·4 | B |
| | 1 | 0 | 22·87 | 523·6 | 40·1 | 775·0 | 41·0 | B |
| | 2 | 0 | 22·64 | 526·5 | 40·5 | 778·4 | 41·7 | B |
| | 3 | 0 | 21·03 | 525·7 | 41·1 | 779·1 | 42·7 | B |
| | 4 | 0 | 22·11 | 523·7 | 41·9 | 779·6 | 43·3 | B |
| | 5 | 0 | 22·20 | 526·5 | 42·3 | 778·7 | 43·5 | B |
| | 6 | 0† | 24·08 | 527·9 | 42·7 | 777·5 | 43·6 | W |
| | 7 | 0† | 25.58 | 524·1 | 42·8 | 783·6 | 43·7 | W |
| | 8 | 0† | 24·25 | 523·2 | 42·8 | 795·2 | 43·6 | W |
| | 9 | 0 | 22·11 | 525·3 | 42·7 | 795·7 | 43·0 | W |
| | 10 | 0 | 20·82 | 523·7 | 42·3 | 796·4 | 42·5 | W |
| | 11 | 0 | 19·10 | 524·2 | 41·9 | 787·1 | 41·9 | H |
| | 12 | 0 | 20·22 | 521·9 | 41·5 | 782·9 | 41·4 | H |
| | 13 | 0 | 25 19·56 | 520·1 | 41·2 | 779·4 | 40·8 | H |
| | 14 | 0 | 19·91 | 521·1 | 40·8 | 777·6 | 40·2 | H |
| | 15 | 0 | 19·81 | 521·9 | 40·4 | 775·8 | 39·8 | H |
| | 16 | 0 | 20·00 | 522·5 | 39·9 | 774·2 | 39·3 | H |
| | 17 | 0 | 20·11 | 520·9 | 39·5 | 776·2 | 38·8 | H |
| | 18 | 0 | 19·98 | 519·0 | 39·1 | 778·2 | 38·2 | H |
| | 19 | 0 | 20·08 | 518·7 | 38·6 | 777·0 | 37·7 | H |
| | 20 | 0 | 20·05 | 518·2 | 38·1 | 774·9 | 37·1 | H |
| | 21 | 0 | 20·79 | 517·9 | 37·7 | 775·3 | 36·6 | W |
| | 22 | 0 | 21·24 | 518·1 | 37·3 | 779·5 | 36·4 | W |
| | 23 | 0 | 21·39 | 518·0 | 37·0 | 780·7 | 36·2 | W |
| 24 | 0 | 0 | 21·30 | 518·4 | 36·8 | 787·4 | 36·4 | W |
| | 1 | 0 | 21·27 | 518·4 | 36·8 | 788·9 | 36·9 | W |
| | 2 | 0 | 21·24 | 520·8 | 37·0 | 788·1 | 37·8 | W |
| | 3 | 0 | 20·82 | 520·0 | 37·6 | 789·3 | 39·0 | W |
| | 4 | 0 | 20·90 | 520·4 | 38·6 | 788·1 | 40·0 | W |
| | 5 | 0 | 21·07 | 520·0 | 39·4 | 792·1 | 40·9 | W |
| | 6 | 0 | 20·77 | 520·8 | 40·0 | 792·7 | 41·3 | H |
| | 7 | 0 | 20·47 | 517·0 | 40·2 | 792·9 | 41·3 | H |
| | 8 | 0 | 19·46 | 523·4 | 40·3 | 792·4 | 41·4 | H |
| | 9 | 0 | 18·87 | 523·5 | 40·4 | 783·8 | 41·3 | H |
| | 10 | 0 | 18·67 | 522·5 | 40·5 | 780·7 | 41·1 | H |
| | 11 | 0 | 18·18 | 524·0 | 40·6 | 779·2 | 41·5 | W |
| | 12 | 0 | 20·06 | 524·5 | 40·8 | 774·0 | 41·8 | W |

| Göttingen Mean Time of Declination Obs. | | | Declination. | Bifilar. | | Balance. | | Observer's Initial. |
|---|---|---|---|---|---|---|---|---|
| | | | | Corrected. | Thermometer. | Corrected. | Thermometer. | |
| d. | h. | m. | ° ′ | Sc. Div. | ° | Mic. Div. | ° | |
| 24 | 13 | 0 | 25 18·03 | 521·4 | 41·0 | 772·9 | 42·4 | D |
| | 14 | 0 | 19·32 | 518·3 | 41·3 | 771·8 | 42·5 | D |
| | 15 | 0 | 16·12 | 517·8 | 41·7 | 754·0 | 43·1 | D |
| | 16 | 0 | 13·44 | 520·5 | 41·9 | 726·1 | 43·5 | D |
| | 17 | 0 | 13·59 | 527·8 | 42·1 | 685·4 | 43·6 | D |
| | 18 | 0 | 22·18 | 524·6 | 42·3 | 623·6 | 43·7 | B |
| | 19 | 0 | 28·93 | 524·5 | 42·5 | 650·3 | 43·8 | B |
| | 20 | 0 | 28·90 | 518·6 | 42·7 | 686·9 | 43·9 | B |
| | 21 | 0 | 27·39 | 513·8 | 42·8 | 719·3 | 44·0 | H |
| | 22 | 0 | 26·90 | 514·1 | 42·8 | 747·4 | 44·3 | H |
| | 23 | 0 | 28·92 | 509·0 | 42·9 | 767·7 | 44·3 | H |
| 25 | 0 | 0 | 28·25 | 513·8 | 43·0 | 777·8 | 44·3 | H |
| | 1 | 0 | 29·98 | 517·4 | 43·0 | 795·6 | 44·4 | W |
| | 2 | 0 | 30·10 | 514·6 | 43·2 | 820·3 | 44·4 | W |
| | 3 | 0 | 30·00 | 521·1 | 43·4 | 841·4 | 44·5 | W |
| | 4 | 0 | 24·23 | 515·4 | 43·6 | 834·4 | 44·7 | B |
| | 5 | 0 | 23·27 | 521·8 | 43·8 | 809·7 | 44·9 | B |
| | 6 | 0 | 21·10 | 519·4 | 44·0 | 792·9 | 45·2 | D |
| | 7 | 0 | 20·32 | 518·6 | 44·3 | 786·4 | 45·5 | D |
| | 8 | 0 | 19·15 | 523·0 | 44·6 | 773·6 | 45·8 | H |
| | 9 | 0 | 19·29 | 520·3 | 44·8 | 772·8 | 46·1 | H |
| | 10 | 0 | 19·12 | 522·9 | 44·9 | 764·6 | 46·0 | H |
| | 11 | 0 | ..... | ..... | ..... | ..... | ..... | W |
| | 12 | 0 | 19·88 | 517·2 | 44·9 | 765·5 | 45·4 | W |
| | 13 | 0 | 25 19·64 | 518·4 | 44·5 | 760·7 | 44·9 | W |
| | 14 | 0 | 19·41 | 520·2 | 44·0 | 754·0 | 44·3 | W |
| | 15 | 0 | 18·82 | 517·9 | 43·7 | 756·2 | 43·6 | W |
| | 16 | 0 | 19·75 | 515·8 | 43·3 | 762·6 | 43·1 | W |
| | 17 | 0 | 20·60 | 518·8 | 42·9 | 765·4 | 42·7 | W |
| | 18 | 0 | 20·55 | 519·4 | 42·6 | 768·6 | 42·3 | W |
| | 19 | 0 | 20·15 | 519·8 | 42·1 | 769·3 | 42·0 | W |
| | 20 | 0 | 19·56 | 521·9 | 41·9 | 767·3 | 41·5 | W |
| | 21 | 0 | 20·08 | 521·6 | 41·7 | 770·9 | 41·4 | B |
| | 22 | 0 | 20·89 | 519·0 | 41·4 | 776·0 | 41·2 | B |
| | 23 | 0 | 21·21 | 519·5 | 41·2 | 772·0 | 41·2 | B |
| 26 | 0 | 0 | 22·30 | 518·8 | 41·1 | 774·7 | 41·4 | B |
| | 1 | 0 | 22·60 | 518·4 | 41·2 | 775·0 | 41·9 | B |
| | 2 | 0 | 22·75 | 520·1 | 41·6 | 777·3 | 42·5 | B |
| | 3 | 0 | 21·76 | 521·3 | 42·1 | 778·5 | 43·4 | B |
| | 4 | 0 | 20·85 | 520·9 | 42·9 | 775·0 | 44·1 | B |
| | 5 | 0 | 20·94 | 523·3 | 43·3 | 777·7 | 44·5 | B |
| | 6 | 0 | 20·76 | 519·8 | 43·7 | 777·5 | 44·6 | W |
| | 7 | 0 | 20·25 | 520·2 | 43·9 | 777·2 | 44·7 | W |
| | 8 | 0 | 20·32 | 520·3 | 43·9 | 776·9 | 44·5 | W |
| | 9 | 0 | 20·52 | 520·9 | 43·9 | 775·7 | 44·4 | W |
| | 10 | 0 | 19·91 | 518·9 | 43·8 | 774·2 | 44·2 | W |
| | 11 | 0† | 15·12 | 513·6 | 43·7 | 771·7 | 44·2 | H |
| | 12 | 0† | 17·24 | 519·7 | 43·6 | 767·6 | 44·2 | H |
| | 13 | 0† | 25 17·06 | 511·7 | 43·5 | 772·8 | 44·3 | H |
| | 14 | 0† | 20·03 | 516·1 | 43·5 | 770·4 | 44·4 | H |
| | 15 | 0 | 20·85 | 515·4 | 43·6 | 771·6 | 44·5 | H |
| | 16 | 0 | 19·84 | 519·9 | 43·6 | 770·3 | 44·4 | H |
| | 17 | 0 | 20·02 | 518·7 | 43·6 | 771·5 | 44·4 | H |
| | 18 | 0 | 19·81 | 522·4 | 43·6 | 768·4 | 44·4 | H |
| | 19 | 0 | 19·35 | 524·8 | 43·7 | 770·1 | 44·5 | W |
| | 20 | 0 | 19·84 | 525·1 | 43·9 | 768·5 | 44·6 | W |

DECLINATION. Torsion removed,—Jan. $1^d$ $3^h$, + 2°. Effect of + 10° of Torsion = − 0′·84.
BIFILAR. Observed $2^m$ after the Declination, $k$=0·000140. BALANCE. Observed $3^m$ after the Declination, $k$=0·0000085.

† Extra Observations made.

| Göttingen Mean Time of Declination Obs. | | | Declination. | Bifilar. | | Balance. | | Observer's Initial. |
|---|---|---|---|---|---|---|---|---|
| | | | | Corrected. | Thermometer. | Corrected. | Thermometer. | |
| d. | h. | m. | ° ′ | Sc. Div. | ° | Mic. Div. | ° | |
| 26 | 21 | 0 | 25 16·80 | 525·3 | 44·0 | 756·8 | 44·8 | B |
| | 22 | 0 | 18·49 | 523·7 | 44·1 | 758·5 | 45·0 | W |
| | 23 | 0 | 19·65 | 520·8 | 44·3 | 769·7 | 43·5 | W |
| 27 | 0 | 0 | 20·17 | 519·2 | 44·6 | ..... | ..... | W |
| | 1 | 0 | 21·70 | 521·0 | 44·9 | ..... | ..... | W |
| | 2 | 0 | 20·40 | 522·8 | 45·5 | ..... | ..... | W |
| | 3 | 0 | 18·82 | 522·2 | 45·3 | ..... | ..... | W |
| | 4 | 0 | 17·58 | 519·4 | 45·6 | ..... | ..... | W |
| | 5 | 0 | 17·40 | 518·3 | 45·8 | ..... | ..... | W |
| | 6 | 0 | 17·40 | 521·0 | 45·9 | ..... | ..... | W |
| | 7 | 0 | 18·22 | 518·8 | 46·0 | ..... | ..... | H |
| | 8 | 0 | 17·56 | 515·2 | 46·0 | ..... | ..... | H |
| | 9 | 0 | 19·63 | 513·7 | 46·2 | ..... | ..... | H |
| | 10 | 0† | 19·46 | 516·2 | 46·4 | ..... | ..... | H |
| | 11 | 5† | 16·62 | 520·9 | 46·9 | ..... | ..... | W |
| | 12 | 0 | 19·64 | 521·1 | 47·0 | 740·7 | 49·6 | B |
| 28 | 13 | 0† | 25 17·04 | 514·8 | 44·4 | 746·9 | 43·5 | W |
| | 14 | 0 | 18·82 | 516·2 | 44·0 | 744·9 | 43·4 | W |
| | 15 | 0 | 18·18 | 513·6 | 43·7 | 753·7 | 43·0 | W |
| | 16 | 0† | 22·30 | 516·9 | 43·3 | 748·1 | 42·5 | W |
| | 17 | 0† | 17·73 | 516·7 | 42·9 | 745·4 | 42·3 | W |
| | 18 | 0 | 18·68 | 519·9 | 42·6 | 748·7 | 41·9 | W |
| | 19 | 0 | 18·14 | 518·4 | 42·2 | 757·3 | 41·5 | W |
| | 20 | 0 | 18·88 | 519·2 | 42·0 | 759·6 | 41·1 | W |
| | 21 | 0 | 19·82 | 520·7 | 41·7 | 762·0 | 41·0 | B |
| | 22 | 0 | 20·25 | 516·9 | 41·4 | 765·9 | 40·8 | B |
| | 23 | 0 | 21·93 | 515·1 | 41·2 | 769·1 | 40·8 | H |
| 29 | 0 | 0 | 22·65 | 513·9 | 41·0 | 776·4 | 40·8 | B |
| | 1 | 0 | 22·92 | 515·3 | 40·9 | 780·5 | 40·9 | H |
| | 2 | 0 | 21·50 | 521·1 | 40·9 | 780·4 | 41·1 | B |
| | 3 | 0 | 21·53 | 519·9 | 41·2 | 781·7 | 41·4 | B |
| | 4 | 0 | 20·45 | 519·6 | 41·5 | 778·6 | 41·9 | B |
| | 5 | 0 | 20·76 | 520·7 | 41·8 | 776·5 | 42·3 | B |
| | 6 | 0 | 19·98 | 515·9 | 42·0 | 780·8 | 42·8 | W |
| | 7 | 0 | 20·03 | 518·7 | 42·4 | 780·4 | 43·5 | W |
| | 8 | 0 | 20·05 | 516·4 | 42·8 | 786·3 | 43·8 | W |
| | 9 | 0† | 20·32 | 513·7 | 43·1 | 793·0 | 44·1 | W |
| | 10 | 0 | 18·20 | 516·8 | 43·5 | 789·3 | 44·5 | W |
| | 11 | 0 | 18·70 | 523·6 | 43·7 | 780·0 | 44·6 | H |
| | 12 | 0 | 19·17 | 518·6 | 43·8 | 770·9 | 44·6 | H |
| | 13 | 0 | 25 20·35 | 519·3 | 43·9 | 761·1 | 44·7 | H |
| | 14 | 0 | 19·48 | 517·4 | 44·0 | 760·4 | 44·8 | H |
| | 15 | 0 | 19·35 | 517·6 | 44·0 | 761·4 | 44·8 | H |
| | 16 | 0 | 19·32 | 519·0 | 44·0 | 762·5 | 44·7 | H |
| | 17 | 0 | 19·05 | 520·5 | 44·0 | 760·8 | 44·8 | H |
| | 18 | 0 | 18·23 | 521·3 | 44·1 | 762·6 | 44·6 | H |
| | 19 | 0 | 18·07 | 524·4 | 44·1 | 757·9 | 44·5 | H |
| | 20 | 0 | 18·18 | 522·9 | 43·9 | 759·7 | 44·1 | H |
| | 21 | 0 | 19·69 | 521·8 | 43·8 | 760·3 | 43·6 | W |
| | 22 | 0 | 20·74 | 519·4 | 43·4 | 763·5 | 43·2 | W |
| | 23 | 0 | 20·35 | 517·3 | 43·0 | 755·5 | 43·0 | W |
| 30 | 0 | 0 | 21·79 | 519·2 | 42·9 | 760·3 | 43·0 | W |
| | 1 | 0 | 20·72 | 515·7 | 42·8 | 770·4 | 43·0 | W |
| | 2 | 0 | 20·89 | 519·7 | 42·9 | 770·1 | 43·4 | W |
| | 3 | 0 | 20·18 | 521·9 | 43·0 | 770·9 | 43·7 | W |
| | 4 | 0 | 20·05 | 521·3 | 43·0 | 776·3 | 43·8 | W |
| 30 | 5 | 0 | 25 20·25 | 520·5 | 43·1 | 772·4 | 43·6 | W |
| | 6 | 0 | 21·27 | 517·2 | 43·0 | 774·9 | 43·4 | H |
| | 7 | 0† | 13·46 | 522·1 | 42·9 | 785·5 | 43·4 | H |
| | 8 | 0 | 19·44 | 521·1 | 42·8 | 775·8 | 43·2 | H |
| | 9 | 0 | 19·26 | 518·3 | 42·6 | 776·9 | 42·7 | H |
| | 10 | 0 | 18·84 | 518·3 | 42·3 | 772·5 | 42·3 | H |
| | 11 | 0 | 18·74 | 518·6 | 42·0 | 767·8 | 41·7 | B |
| | 12 | 0† | 15·44 | 529·6 | 41·8 | 747·0 | 41·2 | B |
| | 13 | 0† | 25 14·85 | 518·2 | 41·4 | 744·7 | 41·0 | B |
| | 14 | 0 | 19·17 | 516·2 | 41·0 | 746·0 | 40·5 | B |
| | 15 | 0 | 19·05 | 516·9 | 40·7 | 747·8 | 40·0 | B |
| | 16 | 0 | 18·90 | 515·5 | 40·3 | 752·4 | 39·5 | B |
| | 17 | 0 | 20·18 | 517·1 | 39·9 | 747·8 | 38·9 | B |
| | 18 | 0 | 18·08 | 519·6 | 39·5 | 746·2 | 38·4 | B |
| | 19 | 0 | 17·29 | 521·6 | 39·0 | 749·8 | 38·0 | B |
| | 20 | 0 | 18·77 | 520·9 | 38·7 | 753·9 | 37·5 | B |
| | 21 | 0 | 19·39 | 517·6 | 38·3 | 754·2 | 37·2 | H |
| | 22 | 0 | 20·43 | 516·7 | 37·9 | 754·8 | 36·9 | H |
| | 23 | 0 | 21·48 | 516·5 | 37·6 | 752·7 | 36·8 | H |
| 31 | 0 | 0 | 23·14 | 517·3 | 37·3 | 760·3 | 36·8 | W |
| | 1 | 0 | 22·89 | 516·4 | 37·2 | 763·3 | 37·2 | H |
| | 2 | 0 | 22·47 | 518·8 | 37·2 | 768·4 | 37·4 | H |
| | 3 | 0 | 21·27 | 520·9 | 37·4 | 769·7 | 37·5 | H |
| | 4 | 0 | 20·11 | 521·4 | 37·4 | 770·9 | 37·7 | H |
| | 5 | 0 | 19·39 | 521·6 | 37·4 | 767·8 | 37·6 | H |
| | 6 | 0 | 19·41 | 522·8 | 37·5 | 766·3 | 37·2 | B |
| | 7 | 0 | 19·51 | 522·4 | 37·3 | 768·8 | 36·9 | B |
| | 8 | 0† | 18·16 | 510·1 | 37·1 | 787·2 | 36·4 | B |
| | 9 | 0† | 09·88 | 522·7 | 36·9 | 788·6 | 36·0 | B |
| | 10 | 0† | 19·64 | 509·9 | 36·7 | 787·1 | 35·6 | B |
| | 11 | 0 | 19·31 | 521·6 | 36·3 | 775·6 | 35·4 | W |
| | 12 | 0 | 19·41 | 520·1 | 36·0 | 770·8 | 34·9 | W |
| | 13 | 0 | 25 18·90 | 521·4 | 35·6 | 764·3 | 34·4 | W |
| | 14 | 0 | 19·42 | 518·7 | 35·2 | 769·8 | 33·9 | W |
| | 15 | 0† | 21·03 | 525·9 | 34·9 | 765·8 | 33·6 | W |
| | 16 | 0 | 19·14 | 523·5 | 34·7 | 758·1 | 33·5 | W |
| | 17 | 0 | 17·91 | 528·8 | 34·4 | 753·0 | 33·4 | W |
| | 18 | 0 | 17·15 | 522·6 | 34·1 | 754·5 | 33·2 | W |
| | 19 | 0 | 16·55 | 519·9 | 33·9 | 753·8 | 33·0 | W |
| | 20 | 0 | 19·62 | 522·1 | 33·7 | 749·5 | 32·6 | W |
| | 21 | 0 | 18·50 | 525·2 | 33·4 | 748·2 | 32·3 | B |
| | 22 | 0 | 20·53 | 527·8 | 33·1 | 746·8 | 32·0 | B |
| | 23 | 0 | 22·01 | 521·1 | 32·9 | 750·8 | 32·0 | B |
| 1 | 0 | 0 | 23·95 | 517·7 | 32·8 | 763·4 | 32·2 | B |
| | 1 | 0 | 26·25 | 516·2 | 32·8 | 769·2 | 33·1 | H |
| | 2 | 0 | 24·94 | 518·4 | 33·0 | 779·7 | 34·0 | B |
| | 3 | 0† | 26·97 | 525·5 | 33·7 | 779·3 | 35·2 | B |
| | 4 | 0† | 28·27 | 522·8 | 34·4 | 817·9 | 36·3 | B |
| | 5 | 0† | 17·78 | 519·3 | 35·1 | 857·9 | 37·0 | B |
| | 6 | 0† | 30·05 | 515·0 | 35·7 | 841·7 | 37·4 | W |
| | 7 | 0† | 24·15 | 517·0 | 36·0 | 835·8 | 37·6 | W |
| | 8 | 0† | 17·15 | 515·2 | 36·2 | 833·6 | 37·5 | W |
| | 9 | 0† | 09·02 | 554·4 | 36·2 | 781·1 | 37·4 | W |
| | 10 | 0† | 13·16 | 511·2 | 36·1 | 753·7 | 37·2 | W |
| | 11 | 0† | 17·02 | 512·7 | 36·0 | 776·8 | 36·9 | H |
| | 12 | 0 | 17·87 | 512·2 | 35·9 | 777·7 | 36·7 | H |

DECLINATION. Torsion removed,—Jan. 27d 7h, 0°. Effect of + 10° of Torsion = − 0′·84.
BIFILAR. Observed 2m after the Declination, $k$=0·000140. BALANCE. Observed 3m after the Declination, $k$=0·0000085.

† Extra Observations made.
Jan. 26d 21h—27d 7h. The magnet with the short scale used in the declinometer; the readings of the declinometer have been corrected for the effect of the removal of the balance magnet.
Jan. 27d 0h—11h. Balance magnet removed for the purpose of determining its temperature correction by the method of deflections; its time of vibration in a horizontal plane was determined in the declinometer box between 27d, 8h, and 9h.
Jan. 31d 6h. A thick cotton cover put over the bifilar instrument.

| Göttingen Mean Time of Declination Obs. | | | Declination. | Bifilar. | | Balance. | | Observer's Initial. |
|---|---|---|---|---|---|---|---|---|
| | | | | Corrected. | Thermometer. | Corrected. | Thermometer. | |
| d. | h. | m. | ° ′ | Sc. Div. | ° | Mic. Div. | ° | |
| 1 | 13 | 0 | 25 18·74 | 515·0 | 35·8 | 776·5 | 36·4 | H |
| | 14 | 0 | 20·16 | 518·6 | 35·6 | 767·5 | 36·0 | H |
| | 15 | 0 | 18·82 | 516·8 | 35·4 | 768·0 | 35·7 | H |
| | 16 | 0 | 19·14 | 514·8 | 35·2 | 769·5 | 35·5 | H |
| | 17 | 0 | 19·19 | 516·0 | 35·0 | 764·9 | 85·0 | H |
| | 18 | 0† | 16·65 | 518·4 | 34·8 | 765·5 | 35·0 | H |
| | 19 | 0† | 16·35 | 516·4 | 34·8 | 772·1 | 35·0 | H |
| | 20 | 0 | 18·84 | 513·5 | 34·7 | 774·8 | 34·9 | H |
| | 21 | 0 | 18·28 | 520·5 | 34·6 | 761·8 | 34·6 | W |
| | 22 | 0 | 20·90 | 514·7 | 34·5 | 768·6 | 34·6 | W |
| | 23 | 0 | 20·63 | 519·2 | 34·4 | 760·9 | 34·6 | W |
| 2 | 0 | 0 | 21·85 | 513·6 | 34·3 | 770·2 | 34·7 | W |
| | 1 | 0 | 22·74 | 516·8 | 34·3 | 767·6 | 35·0 | W |
| | 2 | 0 | 22·67 | 520·1 | 34·3 | 766·1 | 35·2 | W |
| | 3 | 0 | 22·33 | 525·2 | 34·6 | 769·7 | 35·5 | W |
| | 4 | 0 | 22·22 | 532·3 | 34·9 | 770·5 | 35·7 | W |
| | 5 | 0† | 22·65 | 516·4 | 35·0 | 778·1 | 36·0 | B |
| | 6 | 0† | 15·41 | 504·9 | 35·1 | 827·2 | 36·0 | H |
| | 7 | 0† | 20·40 | 514·7 | 35·2 | 823·5 | 36·4 | H |
| | 8 | 0† | 22·87 | 520·0 | 35·4 | 800·7 | 36·6 | H |
| | 9 | 0 | 20·02 | 520·5 | 35·6 | 774·9 | 36·7 | H |
| | 10 | 0 | 19·37 | 520·8 | 35·6 | 769·1 | 36·5 | H |
| | 11 | 0† | 17·49 | 517·1 | 35·8 | 763·9 | 36·5 | B |
| | 12 | 0† | 17·54 | 481·8 | 35·7 | 670·1 | 36·4 | B |
| | 13 | 0† | 25 11·00 | 513·6 | 35·7 | 719·6 | 36·5 | B |
| | 14 | 0† | 19·01 | 510·1 | 35·7 | 715·6 | 36·5 | B |
| | 15 | 0† | 13·52 | 502·4 | 35·7 | 728·4 | 36·5 | B |
| | 16 | 0† | 17·44 | 506·9 | 35·7 | 735·4 | 36·4 | B |
| | 17 | 0† | 17·08 | 505·1 | 35·7 | 717·7 | 36·2 | B |
| | 18 | 0† | 21·21 | 522·8 | 35·5 | 703·5 | 36·0 | B |
| | 19 | 0† | 19·55 | 525·0 | 35·4 | 704·2 | 36·0 | B |
| | 20 | 0 | 18·60 | 516·5 | 35·3 | 730·8 | 36·0 | B |
| | 21 | 0 | 19·58 | 519·3 | 35·3 | 736·3 | 35·7 | H |
| | 22 | 0 | 19·21 | 516·5 | 35·2 | 745·1 | 35·7 | H |
| | 23 | 0 | 20·13 | 511·3 | 35·2 | 770·3 | 36·0 | H |
| 3 | 0 | 0 | 20·89 | 513·0 | 35·3 | 777·2 | 36·3 | H |
| | 1 | 0 | 22·42 | 509·5 | 35·4 | 779·9 | 36·7 | H |
| | 2 | 0 | 21·86 | 516·2 | 35·8 | 777·6 | 37·5 | H |
| | 3 | 0 | 21·84 | 516·6 | 36·4 | 785·5 | 38·3 | H |
| | 4 | 0 | 20·15 | 522·5 | 36·9 | 780·7 | 38·8 | H |
| | 5 | 0 | 19·51 | 521·3 | 37·4 | 773·9 | 39·2 | H |
| | 6 | 0 | 18·92 | 524·3 | 37·9 | 759·5 | 39·1 | B |
| | 7 | 0† | 22·18 | 522·6 | 37·9 | 772·9 | 38·9 | B |
| | 8 | 0† | 12·13 | 527·8 | 37·9 | 776·0 | 38·5 | B |
| | 9 | 0 | 15·47 | 516·8 | 37·9 | 770·8 | 38·1 | B |
| | 10 | 0 | 18·16 | 516·7 | 37·4 | 773·3 | 37·5 | B |
| | 11 | 0† | 13·61 | 517·6 | 37·0 | 772·9 | 36·9 | W |
| | 12 | 0† | 12·20 | 532·6 | 36·8 | 743·4 | 36·5 | W |
| 4 | 13 | 0† | 25 18·37 | 516·8 | 35·7 | 760·3 | 35·3 | H |
| | 14 | 0† | 23·01 | 514·5 | 35·4 | 750·8 | 35·1 | H |
| | 15 | 0† | 20·70 | 513·9 | 35·1 | 736·6 | 34·9 | H |
| | 16 | 0† | 16·62 | 516·9 | 34·9 | 743·7 | 34·7 | H |
| | 17 | 0 | 19·05 | 517·1 | 34·7 | 751·4 | 34·3 | H |
| | 18 | 0† | 17·56 | 520·9 | 34·4 | 747·8 | 34·0 | H |
| | 19 | 0† | 18·43 | 520·9 | 34·2 | 754·5 | 33·8 | H |
| | 20 | 0 | 18·63 | 522·2 | 34·0 | 750·4 | 33·6 | H |

| Gottingen Mean Time of Declination Obs. | | | Declination. | Bifilar. | | Balance. | | Observer's Initial. |
|---|---|---|---|---|---|---|---|---|
| | | | | Corrected. | Thermometer. | Corrected. | Thermometer. | |
| d | h. | m. | ° ′ | Sc. Div. | ° | Mic. Div. | ° | |
| 4 | 21 | 0 | 25 18·16 | 519·2 | 33·8 | 753·9 | 33·2 | W |
| | 22 | 0 | 17·96 | 518·2 | 33·5 | 756·9 | 33·0 | W |
| | 23 | 0 | 21·79 | 511·4 | 33·3 | 759·4 | 33·0 | W |
| 5 | 0 | 0 | 25·51 | 502·8 | 33·1 | 766·1 | 33·2 | W |
| | 1 | 0 | 25·68 | 505·7 | 33·2 | 765·8 | 33·7 | B |
| | 2 | 0 | 22·13 | 519·2 | 33·4 | 768·5 | 34·5 | W |
| | 3 | 0 | 25·76 | 523·8 | 33·9 | 788·0 | 35·5 | W |
| | 4 | 0 | 21·59 | 512·2 | 34·7 | 794·2 | 36·6 | W |
| | 5 | 0 | 21·41 | 525·3 | 35·4 | 800·4 | 37·3 | W |
| | 6 | 0 | 22·22 | 512·2 | 35·9 | 812·0 | 37·6 | H |
| | 7 | 0† | 19·10 | 513·9 | 36·3 | 839·6 | 37·7 | H |
| | 8 | 0† | 18·72 | 515·0 | 36·5 | 775·4 | 37·9 | H |
| | 9 | 0† | 16·57 | 512·5 | 36·6 | 819·5 | 37·8 | H |
| | 10 | 0† | 27·01 | 504·0 | 36·6 | 746·4 | 37·6 | H |
| | 11 | 0† | 12·62 | 515·4 | 36·5 | 778·0 | 37·2 | B |
| | 12 | 0† | 23·34 | 502·6 | 36·2 | 737·9 | 36·8 | B |
| | 13 | 0† | 25 17·42 | 519·1 | 36·0 | 701·1 | 36·4 | B |
| | 14 | 0† | 18·10 | 498·9 | 35·9 | 735·2 | 36·0 | B |
| | 15 | 0† | 18·70 | 504·2 | 35·6 | 729·5 | 35·5 | B |
| | 16 | 0† | 19·58 | 513·3 | 35·2 | 759·8 | 34·9 | B |
| | 17 | 0† | 22·91 | 511·7 | 34·8 | 752·1 | 34·4 | B |
| | 18 | 0† | 21·32 | 517·8 | 34·4 | 747·4 | 33·9 | B |
| | 19 | 0 | 18·79 | 519·3 | 34·0 | 752·4 | 33·3 | B |
| | 20 | 0 | 20·16 | 515·9 | 33·7 | 748·0 | 32·6 | B |
| | 21 | 0 | 19·84 | 510·1 | 33·2 | 758·3 | 31·9 | H |
| | 22 | 0 | 20·87 | 507·1 | 32·7 | 763·8 | 31·3 | H |
| | 23 | 0 | 23·99 | 504·9 | 32·3 | 765·0 | 31·2 | H |
| 6 | 0 | 0 | 24·93 | 501·3 | 32·0 | 777·8 | 31·5 | H |
| | 1 | 0 | 20·32 | 512·2 | 32·0 | 778·4 | 32·3 | H |
| | 2 | 0 | 22·44 | 515·8 | 32·2 | 779·9 | 33·5 | H |
| | 3 | 0 | 22·10 | 512·4 | 32·9 | 779·8 | 34·9 | H |
| | 4 | 0 | 20·45 | 519·1 | 33·9 | 780·7 | 36·4 | H |
| | 5 | 0 | 20·72 | 520·1 | 34·9 | 777·1 | 37·2 | H |
| | 6 | 0† | 16·38 | 512·7 | 35·8 | 798·4 | 37·7 | B |
| | 7 | 0† | 12·95 | 522·8 | 36·1 | 779·0 | 37·8 | B |
| | 8 | 0 | 19·58 | 520·8 | 36·3 | 763·1 | 37·6 | B |
| | 9 | 0 | 17·89 | 521·1 | 36·3 | 762·2 | 37·1 | B |
| | 10 | 0† | 20·03 | 547·4 | 36·1 | 735·2 | 36·6 | B |
| | 11 | 0† | 16·52 | 519·0 | 35·9 | 739·7 | 36·3 | W |
| | 12 | 0 | 17·42 | 518·7 | 35·7 | 744·0 | 36·0 | W |
| | 13 | 0† | 25 19·39 | 516·8 | 35·4 | 751·5 | 35·5 | W |
| | 14 | 0† | 18·81 | 515·4 | 35·1 | 737·7 | 35·2 | W |
| | 15 | 0 | 19·10 | 515·3 | 34·9 | 748·6 | 34·9 | W |
| | 16 | 0 | 16·79 | 517·4 | 34·7 | 754·4 | 34·4 | W |
| | 17 | 0 | 18·23 | 513·9 | 34·4 | 758·3 | 34·2 | W |
| | 18 | 0 | 17·68 | 516·6 | 34·1 | 760·9 | 33·9 | W |
| | 19 | 0 | 18·20 | 520·7 | 34·0 | 756·6 | 33·8 | W |
| | 20 | 0 | 19·46 | 518·2 | 33·9 | 754·7 | 33·8 | W |
| | 21 | 0 | 18·87 | 522·0 | 33·9 | 753·1 | 33·8 | B |
| | 22 | 0 | 19·88 | 517·7 | 33·8 | 753·2 | 34·0 | B |
| | 23 | 0 | 21·30 | 518·0 | 33·9 | 745·8 | 34·4 | B |
| 7 | 0 | 0 | 22·30 | 517·3 | 34·1 | 752·0 | 35·5 | B |
| | 1 | 0 | 22·87 | 517·8 | 34·7 | 751·6 | 36·3 | B |
| | 2 | 0 | 24·13 | 519·8 | 35·3 | 758·4 | 37·4 | B |
| | 3 | 0 | 24·52 | 524·8 | 35·9 | 762·9 | 38·2 | B |
| | 4 | 0 | 22·44 | 521·1 | 36·7 | 766·1 | 38·8 | B |

DECLINATION. Magnet untouched, Jan. 27d—Feb. 13d.

BIFILAR. Observed 2m after the Declination, $k=0{\cdot}000140$. BALANCE. Observed 3m after the Declination, $k=0{\cdot}0000085$.

† Extra Observations made.

| Göttingen Mean Time of Declination Obs. | | | Declination. | | Bifilar. | | Balance. | | Observer's Initial. |
|---|---|---|---|---|---|---|---|---|---|
| | | | | | Corrected. | Thermometer. | Corrected. | Thermometer. | |
| d. | h. | m. | ° | ′ | Sc. Div. | ° | Mic. Div. | ° | |
| 7 | 5 | 0 | 25 | 22·87 | 519·0 | 37·1 | 774·2 | 39·0 | B |
| | 6 | 0† | | 17·22 | 515·9 | 37·4 | 783·8 | 39·0 | W |
| | 7 | 0† | | 18·68 | 522·1 | 37·6 | 787·0 | 38·8 | W |
| | 8 | 0† | | 20·85 | 520·5 | 37·5 | 771·5 | 38·5 | W |
| | 9 | 0† | | 09·89 | 500·7 | 37·3 | 785·8 | 38·2 | W |
| | 10 | 0† | | 01·31 | 506·0 | 37·1 | 736·5 | 38·0 | W |
| | 11 | 0† | | 13·41 | 502·0 | 37·0 | 746·8 | 37·8 | H |
| | 12 | 0† | | 08·08 | 506·8 | 36·9 | 745·0 | 37·6 | H |
| | 13 | 0† | 25 | 14·57 | 511·0 | 36·8 | 738·9 | 37·3 | H |
| | 14 | 0 | | 11·28 | 514·1 | 36·5 | 716·8 | 36·8 | H |
| | 15 | 0 | | 19·78 | 511·0 | 36·3 | 739·6 | 36·4 | H |
| | 16 | 0 | | 19·34 | 510·0 | 36·0 | 758·5 | 36·1 | H |
| | 17 | 0 | | 19·84 | 513·2 | 35·8 | 767·8 | 35·7 | H |
| | 18 | 0 | | 19·14 | 519·5 | 35·5 | 767·6 | 35·3 | H |
| | 19 | 0 | | 18·77 | 520·7 | 35·3 | 765·0 | 35·0 | H |
| | 20 | 0 | | 19·49 | 516·7 | 35·0 | 764·6 | 34·8 | H |
| | 21 | 0 | | 21·21 | 518·2 | 34·9 | 752·9 | 34·5 | W |
| | 22 | 0 | | 19·17 | 517·2 | 34·8 | 747·9 | 34·4 | W |
| | 23 | 0 | | 24·69 | 520·5 | 34·7 | 748·0 | 35·0 | W |
| 8 | 0 | 0 | | 24·89 | 514·6 | 34·8 | 751·2 | 35·9 | W |
| | 1 | 0 | | 25·54 | 517·4 | 35·0 | 756·7 | 36·8 | W |
| | 2 | 0 | | 25·53 | 519·4 | 35·8 | 752·2 | 37·5 | W |
| | 3 | 0 | | 22·80 | 524·8 | 36·4 | 769·5 | 38·4 | W |
| | 4 | 0† | | 22·71 | 524·5 | 37·0 | 789·3 | 38·7 | W |
| | 5 | 0† | | 13·49 | 512·5 | 37·3 | 846·3 | 38·9 | W |
| | 6 | 0† | | 21·71 | 515·7 | 37·4 | 812·4 | 38·8 | H |
| | 7 | 0 | | 19·46 | 508·8 | 37·4 | 817·8 | 38·5 | H |
| | 8 | 0 | | 20·20 | 517·2 | 37·5 | 795·4 | 38·4 | H |
| | 9 | 0† | | 17·49 | 525·7 | 37·4 | 776·2 | 38·2 | H |
| | 10 | 0† | | 17·53 | 515·5 | 37·3 | 764·9 | 38·2 | H |
| | 11 | 0† | | 12·65 | 526·3 | 37·2 | 743·0 | 38·0 | B |
| | 12 | 0† | | 18·90 | 517·2 | 37·2 | 743·6 | 38·0 | B |
| | 13 | 0 | 25 | 18·88 | 519·0 | 37·1 | 748·8 | 37·7 | B |
| | 14 | 0† | | 26·52 | 528·1 | 37·0 | 723·2 | 37·4 | B |
| | 15 | 0† | | 18·85 | 521·9 | 36·9 | 694·4 | 37·3 | B |
| | 16 | 0† | | 18·13 | 513·6 | 36·9 | 724·9 | 37·3 | B |
| | 17 | 0 | | 18·70 | 517·5 | 36·9 | 744·7 | 37·1 | B |
| | 18 | 0 | | 18·16 | 520·2 | 36·8 | 747·9 | 37·0 | B |
| | 19 | 0 | | 19·48 | 518·5 | 36·7 | 752·7 | 36·9 | B |
| | 20 | 0 | | 19·21 | 518·1 | 36·6 | 755·4 | 36·7 | B |
| | 21 | 0 | | 19·01 | 517·7 | 36·4 | 755·8 | 36·6 | H |
| | 22 | 0 | | 18·95 | 514·3 | 36·4 | 761·3 | 36·7 | H |
| | 23 | 0 | | 20·40 | 513·1 | 36·3 | 763·2 | 36·8 | H |
| 9 | 0 | 0 | | 22·04 | 515·2 | 36·4 | 758·4 | 36·9 | H |
| | 1 | 0 | | 22·60 | 516·0 | 36·5 | 759·0 | 37·3 | H |
| | 2 | 0 | | 22·18 | 518·5 | 36·6 | 759·1 | 37·7 | H |
| | 3 | 0 | | 21·24 | 520·0 | 36·9 | 763·2 | 38·4 | H |
| | 4 | 0 | | 19·84 | 520·1 | 37·4 | 764·8 | 38·9 | H |
| | 5 | 0 | | 19·44 | 519·8 | 37·8 | 763·7 | 39·3 | H |
| | 6 | 0 | | 19·48 | 521·0 | 38·2 | 756·0 | 39·3 | H |
| | 7 | 0 | | 19·55 | 521·2 | 38·2 | 753·6 | 39·2 | B |
| | 8 | 0 | | 19·34 | 522·0 | 38·2 | 752·4 | 39·1 | B |
| | 9 | 0 | | 18·75 | 521·5 | 38·2 | 750·9 | 38·9 | B |
| | 10 | 0 | | 18·74 | 520·2 | 38·1 | 749·5 | 38·6 | B |
| | 11 | 0 | | 18·81 | 520·1 | 38·0 | 751·0 | 38·4 | W |
| | 12 | 0 | | 18·75 | 520·3 | 37·9 | 749·6 | 38·0 | W |

| Göttingen Mean Time of Declination Obs. | | | Declination. | | Bifilar. | | Balance. | | Observer's Initial. |
|---|---|---|---|---|---|---|---|---|---|
| | | | | | Corrected. | Thermometer. | Corrected. | Thermometer. | |
| d. | h. | m. | ° | ′ | Sc. Div. | ° | Mic. Div. | ° | |
| 9 | 13 | 0 | 25 | 19·12 | 520·5 | 37·8 | 749·1 | 37·8 | W |
| | 14 | 0 | | 18·34 | 518·6 | 37·6 | 751·0 | 37·5 | W |
| | 15 | 0 | | 18·27 | 519·1 | 37·3 | 746·1 | 37·0 | W |
| | 16 | 0 | | 18·47 | 518·4 | 37·0 | 742·7 | 36·6 | W |
| | 17 | 0 | | 16·87 | 517·3 | 36·8 | 745·3 | 36·2 | W |
| | 18 | 0 | | 17·19 | 522·3 | 36·5 | 745·3 | 35·8 | W |
| | 19 | 0 | | 17·65 | 524·4 | 36·1 | 745·5 | 35·5 | W |
| | 20 | 0 | | 18·87 | 523·7 | 35·9 | 748·1 | 35·1 | W |
| | 21 | 0 | | 20·18 | 521·2 | 35·6 | 747·2 | 34·9 | B |
| | 22 | 0 | | 20·65 | 515·8 | 35·3 | 750·6 | 34·5 | B |
| | 23 | 0 | | 20·67 | 514·6 | 35·0 | 745·2 | 34·6 | H |
| 10 | 0 | 2 | | 22·04 | 512·9 | 34·9 | 749·7 | 34·7 | H |
| | 1 | 0 | | 21·59 | 513·5 | 34·9 | 756·4 | 35·1 | H |
| | 2 | 0 | | 21·86 | 515·7 | 35·0 | 759·5 | 35·7 | B |
| | 3 | 0 | | 21·56 | 520·5 | 35·3 | 766·3 | 36·6 | B |
| | 4 | 0 | | 19·71 | 518·8 | 35·7 | 770·0 | 37·2 | H |
| | 5 | 0 | | 20·09 | 522·8 | 36·1 | 767·9 | 37·5 | B |
| | 6 | 0 | | 18·99 | 519·8 | 36·4 | 766·4 | 37·5 | W |
| | 7 | 0 | | 18·47 | 521·2 | 36·6 | 765·5 | 37·5 | W |
| | 8 | 0 | | 18·40 | 521·9 | 36·7 | 763·0 | 37·2 | W |
| | 9 | 0† | | 07·13 | 523·7 | 36·6 | 766·8 | 37·0 | W |
| | 10 | 0† | | 13·46 | 509·2 | 36·5 | 775·5 | 37·0 | W |
| | 11 | 0† | | 16·46 | 511·0 | 36·4 | 772·5 | 36·8 | H |
| | 12 | 0† | | 21·44 | 511·8 | 36·4 | 785·1 | 36·9 | H |
| 11 | 13 | 0† | 25 | 14·68 | 516·0 | 35·6 | 741·3 | 34·8 | B |
| | 14 | 0† | | 17·46 | 513·3 | 35·1 | 747·4 | 34·4 | B |
| | 15 | 0 | | 19·53 | 514·2 | 34·8 | 749·7 | 34·0 | B |
| | 16 | 0 | | 17·40 | 515·4 | 34·4 | 745·3 | 33·5 | B |
| | 17 | 0† | | 17·29 | 519·2 | 34·0 | 746·6 | 33·1 | B |
| | 18 | 0 | | 17·84 | 520·2 | 33·8 | 749·3 | 33·0 | B |
| | 19 | 0 | | 18·27 | 521·0 | 33·5 | 750·9 | 32·8 | H |
| | 20 | 0 | | 18·90 | 523·4 | 33·3 | 750·0 | 32·6 | H |
| | 21 | 0 | | 19·24 | 520·5 | 33·1 | 748·7 | 32·6 | W |
| | 22 | 0 | | 19·29 | 519·0 | 32·9 | 751·1 | 32·6 | H |
| | 23 | 0 | | 22·13 | 519·9 | 32·9 | 755·0 | 33·0 | H |
| 12 | 0 | 0 | | 21·04 | 516·0 | 32·9 | 754·6 | 33·5 | H |
| | 1 | 0 | | 21·91 | 519·2 | 33·2 | 753·3 | 34·2 | H |
| | 2 | 0 | | 21·73 | 520·9 | 33·5 | 752·2 | 34·7 | B |
| | 3 | 0 | | 21·97 | 521·9 | 33·9 | 752·1 | 35·3 | H |
| | 4 | 0 | | 20·06 | 519·2 | 34·4 | 755·0 | 35·8 | B |
| | 5 | 0 | | 20·60 | 519·6 | 34·8 | 760·2 | 36·3 | H |
| | 6 | 0 | | 19·28 | 520·6 | 35·1 | 764·5 | 36·5 | B |
| | 7 | 0 | | 20·09 | 522·1 | 35·3 | 758·7 | 36·5 | B |
| | 8 | 0 | | 19·76 | 520·4 | 35·5 | 758·5 | 36·5 | B |
| | 9 | 0 | | 18·90 | 523·3 | 35·6 | 753·7 | 36·5 | B |
| | 10 | 0 | | 18·88 | 522·1 | 35·7 | 753·3 | 36·4 | B |
| | 11 | 0 | | 18·84 | 521·2 | 35·6 | 749·8 | 36·1 | W |
| | 12 | 0 | | 18·82 | 521·6 | 35·5 | 749·0 | 35·9 | W |
| | 13 | 0 | 25 | 18·67 | 519·8 | 35·3 | 748·5 | 35·6 | W |
| | 14 | 0 | | 18·85 | 519·5 | 35·1 | 746·9 | 35·3 | W |
| | 15 | 0 | | 19·21 | 520·3 | 35·0 | 745·7 | 35·1 | W |
| | 16 | 0 | | 18·94 | 521·4 | 34·9 | 743·8 | 34·9 | W |
| | 17 | 0 | | 18·20 | 521·8 | 34·8 | 742·7 | 34·7 | W |
| | 18 | 0 | | 17·70 | 523·4 | 34·6 | 740·6 | 34·5 | W |
| | 19 | 0 | | 18·13 | 521·7 | 34·4 | 739·1 | 34·4 | B |
| | 20 | 0 | | 18·84 | 522·7 | 34·3 | 738·9 | 34·4 | B |

DECLINATION. Magnet untouched, Jan. 27d—Feb. 13d.

BIFILAR. Observed 2m after the Declination, $k=0{\cdot}000140$. BALANCE. Observed 3m after the Declination, $k=0{\cdot}0000085$.

† Extra Observations made.

| Göttingen Mean Time of Declination Obs. | Declination. | Bifilar. | | Balance. | | Observer's Initial. |
|---|---|---|---|---|---|---|
| | | Corrected. | Thermometer. | Corrected. | Thermometer. | |
| d. h. m. | ° ′ | Sc. Div. | ° | Mic. Div. | ° | |
| 12 21 0 | 25 19·68 | 520·9 | 34·2 | 740·9 | 34·4 | H |
| 22 0 | 20·15 | 518·0 | 34·1 | 746·4 | 34·3 | B |
| 23 0 | 19·98 | 517·7 | 34·1 | 745·9 | 34·7 | H |
| 13 0 0 | 21·50 | 516·5 | 34·2 | 747·2 | 35 0 | B |
| 1 0 | 22·20 | 519·0 | 34·4 | 744·3 | 35·6 | H |
| 2 0 | 22·11 | 519·4 | 34·8 | 748·2 | 36·2 | H |
| 3 0 | 20·92 | 522·1 | 35·2 | 749·5 | 36·6 | H |
| 4 0 | 20·05 | 523·8 | 35·6 | 750·5 | 37·0 | H |
| 5 0 | 19·26 | 520·5 | 36·0 | 745·8 | 37·3 | H |
| 6 0 | 18·82 | 523·5 | 36·2 | 747·7 | 37·5 | W |
| 7 0 | 19·51 | 523·8 | 36·5 | 748·2 | 37·5 | W |
| 8 0 | 17·00 | 522·2 | 36·6 | 751·3 | 37·5 | W |
| 9 0 | 19·53 | 523·8 | 36·7 | 748·3 | 37·5 | W |
| 10 0 | 19·26 | 522·1 | 36·8 | 751·1 | 37·5 | W |
| 11 0 | 17·42 | 522·6 | 36·8 | 754·6 | 37·5 | H |
| 12 0 | 18·23 | 528·5 | 36·8 | 734·0 | 37·5 | H |
| 13 0 | 25 18·79 | 522·7 | 36·8 | 737·2 | 37·7 | H |
| 14 0 | 18·63 | 522·6 | 36·9 | 739·3 | 37·8 | H |
| 15 0 | 18·55 | 522·7 | 37·0 | 742·2 | 37·9 | H |
| 16 0 | 18·25 | 521·9 | 37·1 | 741·2 | 38·0 | H |
| 17 0 | 18·34 | 522·0 | 37·2 | 743·7 | 38·3 | H |
| 18 0 | 18·07 | 521·9 | 37·3 | 742·4 | 38·3 | H |
| 19 0 | 18·27 | 522·4 | 37·5 | 740·8 | 38·3 | W |
| 20 0 | 18·81 | 523·1 | 37·7 | 741·2 | 38·4 | W |
| 21 0 | 18·94 | 523·5 | 37·9 | 737·9 | 38·5 | B |
| 22 0 | 18·90 | 523·7 | 37·9 | 737·6 | 38·6 | W |
| 23 0 | 19·12 | 522·7 | 37·9 | 735·8 | 38·9 | W |
| 14 0 0 | 19·95 | 522·6 | 38·0 | 735·5 | 39·1 | W |
| 1 0 | 19·98 | 519·1 | 38·3 | 737·3 | 39·5 | W |
| 2 3 | 20·85 | 522·0 | 38·6 | 737·5 | 39·7 | W |
| 3 0 | 21·17 | 523·2 | 38·8 | 738·2 | 40·0 | W |
| 4 0 | 19·66 | 520·7 | 39·0 | 743·0 | 40·5 | W |
| 5 0 | 19·37 | 522·5 | 39·3 | 736·9 | 40·7 | W |
| 6 0 | 19·37 | 523·2 | 39·6 | 738·6 | 41·2 | H |
| 7 0 | 19·17 | 524·3 | 39·8 | 736·3 | 41·3 | H |
| 8 0 | 18·79 | 524·8 | 40·0 | 735·0 | 41·5 | H |
| 9 0 | 18·81 | 526·5 | 40·2 | 732·9 | 41·6 | H |
| 10 0 | 18·81 | 525·7 | 40·5 | 731·3 | 41·8 | H |
| 11 0 | 18·81 | 524·5 | 40·8 | 732·9 | 42·0 | B |
| 12 0 | 18·47 | 524·5 | 41·0 | 731·8 | 42·3 | B |
| 13 0 | 25 18·77 | 524·0 | 41·1 | 729·9 | 42·4 | B |
| 14 0 | 19·40 | 525·0 | 41·2 | 726·4 | 42·5 | B |
| 15 0 | 18·94 | 524·3 | 41·4 | 724·6 | 42·6 | B |
| 16 0 | 18·80 | 524·0 | 41·6 | 722·7 | 42·7 | B |
| 17 0 | 18·27 | 523·3 | 41·8 | 721·0 | 42·9 | B |
| 18 0 | 18·34 | 521·3 | 41·9 | 720·5 | 43·1 | B |
| 19 0 | 20·18 | 522·3 | 42·0 | 718·4 | 43·2 | H |
| 20 0 | 18·94 | 526·6 | 42·1 | 708·1 | 43·4 | H |
| 21 0 | 20·22 | 527·1 | 42·3 | 704·8 | 43·6 | W |
| 22 0 | 20·96 | 525·4 | 42·5 | 707·4 | 43·7 | H |
| 23 0 | 22·20 | 524·8 | 42·7 | 712·1 | 44·2 | H |
| 15 0 0 | 22·60 | 525·0 | 42·9 | 717·1 | 44·5 | H |
| 1 0 | 24·06 | 524·6 | 43·1 | 716·2 | 44·8 | H |
| 2 0 | 20·29 | 520·2 | 43·5 | 715·3 | 45·4 | H |
| 3 0 | 20·82 | 526·9 | 44·0 | 712·6 | 45·9 | H |
| 4 0 | 20·69 | 524·7 | 44·4 | 718·0 | 46·4 | H |

| Göttingen Mean Time of Declination Obs. | Declination. | Bifilar. | | Balance. | | Observer's Initial. |
|---|---|---|---|---|---|---|
| | | Corrected. | Thermometer. | Corrected. | Thermometer. | |
| d. h. m. | ° ′ | Sc. Div. | ° | Mic. Div. | ° | |
| 15 5 0 | 25 17·98 | 515·7 | 44·8 | 725·7 | 46·4 | H |
| 6 0 | 20·67 | 520·9 | 45·1 | 727·2 | 46·3 | H |
| 7 0 | 19·58 | 523·7 | 45·0 | 723·4 | 46·1 | H |
| 8 0 | 19·48 | 520·9 | 44·9 | 727·3 | 45·6 | B |
| 9 0 | 18·97 | 521·6 | 44·8 | 730·5 | 45·1 | B |
| 10 0 | 15·54 | 516·0 | 44·4 | 742·9 | 44·7 | B |
| 11 0 | 18·70 | 516·7 | 44·0 | 738·3 | 44·0 | W |
| 12 0 | 18·68 | 518·9 | 43·7 | 733·7 | 43·5 | W |
| 13 0 | 25 17·83 | 519·1 | 43·3 | 730·6 | 42·9 | W |
| 14 0 | 18·67 | 516·0 | 42·9 | 733·4 | 42·4 | W |
| 15 0 | 18·35 | 517·3 | 42·5 | 731·4 | 41·8 | W |
| 16 0 | 18·18 | 517·6 | 42·1 | 731·1 | 41·3 | W |
| 17 0 | 17·96 | 517·8 | 41·8 | 731·3 | 40·9 | W |
| 18 0 | 18·21 | 519·1 | 41·4 | 731·1 | 40·5 | W |
| 19 4 | 18·21 | 518·6 | 41·1 | 731·5 | 40·2 | B |
| 20 0 | 18·79 | 518·3 | 40·9 | 731·1 | 40·1 | B |
| 21 0 | 19·35 | 519·8 | 40·6 | 730·9 | 39·9 | H |
| 22 0 | 20·06 | 519·5 | 40·4 | 731·3 | 39·6 | B |
| 23 0 | 20·72 | 520·3 | 40·2 | 728·6 | 40·0 | H |
| 16 0 0 | 22·20 | 521·0 | 40·1 | 728·9 | 40·4 | B |
| 1 0 | 22·06 | 522·3 | 40·2 | 730·4 | 41·1 | H |
| 2 0 | 21·95 | 523·1 | 40·7 | 734·0 | 41·9 | H |
| 3 0 | 22·20 | 522·8 | 41·2 | 736·1 | 42·8 | H |
| 4 0 | 20·83 | 520·1 | 41·7 | 737·7 | 43·6 | H |
| 5 0 | 20·97 | 523·1 | 42·4 | 728·3 | 44·2 | H |
| 6 0 | 19·95 | 524·3 | 42·9 | 726·6 | 44·2 | W |
| 7 0 | 19·59 | 524·5 | 43·0 | 725·6 | 44·1 | W |
| 8 0 | 19·31 | 524·8 | 43·0 | 727·2 | 44·0 | W |
| 9 0† | 19·01 | 522·2 | 43·0 | 730·4 | 43·9 | W |
| 10 0† | 16·35 | 521·3 | 43·0 | 739·2 | 44·0 | W |
| 11 0† | 15·36 | 519·5 | 43·0 | 737·3 | 44·0 | H |
| 12 0 | 15·38 | 517·3 | 43·0 | 729·6 | 43·9 | H |
| 13 0 | 25 17·76 | 522·0 | 43·0 | 726·7 | 43·7 | H |
| 14 0 | 18·16 | 522·3 | 43·0 | 725·1 | 43·5 | H |
| 15 0 | 18·85 | 524·4 | 42·9 | 724·5 | 43·4 | H |
| 16 0 | 16·59 | 522·8 | 42·9 | 726·4 | 43·3 | H |
| 17 0 | 18·05 | 523·3 | 42·8 | 728·1 | 43·3 | H |
| 18 0† | 19·04 | 535·7 | 42·7 | 701·4 | 43·2 | H |
| 19 0† | 17·53 | 523·8 | 42·6 | 713·9 | 43·0 | H |
| 20 0 | 17·49 | 528·9 | 42·6 | 713·8 | 43·0 | H |
| 21 0 | 19·04 | 527·4 | 42·5 | 716·3 | 42·9 | B |
| 22 0 | 20·36 | 524·3 | 42·3 | 714·1 | 42·6 | W |
| 23 0 | 22·38 | 525·3 | 42·2 | 710·8 | 42·6 | W |
| 17 0 0 | 24·22 | 522·1 | 42·2 | 716·4 | 42·7 | W |
| 1 0 | 25·31 | 526·7 | 42·2 | 720·4 | 43·0 | W |
| 2 0 | 24·18 | 527·9 | 42·4 | 723·7 | 43·3 | W |
| 3 0 | 23·47 | 524·7 | 42·6 | 724·9 | 43·5 | W |
| 4 0 | 22·95 | 522·2 | 42·9 | 729·7 | 43·5 | W |
| 5 0 | 22·50 | 524·7 | 42·9 | 732·4 | 43·5 | W |
| 6 0 | 20·16 | 521·3 | 42·9 | 735·2 | 43·5 | W |
| 7 0 | 19·82 | 519·0 | 42·9 | 737·6 | 43·5 | W |
| 8 0 | 18·47 | 522·0 | 42·9 | 738·2 | 43·4 | W |
| 9 0 | 17·53 | 523·4 | 42·8 | 739·0 | 43·2 | H |
| 10 0† | 12·13 | 542·0 | 42·7 | 713·8 | 43·0 | H |
| 11 0† | 18·72 | 523·7 | 42·7 | 723·5 | 43·1 | B |
| 12 0† | 15·66 | 519·3 | 42·6 | 706·7 | 43·2 | B |

DECLINATION. Torsion removed,—Feb. 13d 2h, + 2°. Effect of + 10° of Torsion = − 0′·84.
BIFILAR. Observed 2m after the Declination, $k$=0·000140. BALANCE. Observed 3m after the Declination, $k$=0·0000085.

† Extra Observations made.
Feb. 17d 0h—7h. Magnet with short scale used in the declinometer.
Feb. 17d 5h. Deflecting bar vibrated in the declinometer box.

| Göttingen Mean Time of Declination Obs. | Declination. | Bifilar. | | Balance. | | Observer's Initial. |
|---|---|---|---|---|---|---|
| | | Corrected. | Thermometer. | Corrected. | Thermometer. | |
| d. h. m. | ° ′ | Sc. Div. | ° | Mic. Div. | ° | |
| 18 13 0 | 25 18·07 | 525·2 | 42·8 | 726·2 | 43·2 | W |
| 14 0 | 18·03 | 521·7 | 42·7 | 726·1 | 43·1 | W |
| 15 0 | 18·90 | 522·2 | 42·6 | 726·5 | 43·0 | W |
| 16 0 | 17·65 | 522·2 | 42·5 | 727·6 | 42·9 | W |
| 17 0 | 18·27 | 523·7 | 42·4 | 726·6 | 42·8 | W |
| 18 0 | 17·49 | 523·8 | 42·3 | 723·5 | 42·6 | W |
| 19 0 | 18·16 | 524·0 | 42·2 | 721·1 | 42·5 | H |
| 20 0 | 18·32 | 523·6 | 42·1 | 718·6 | 42·5 | H |
| 21 0 | 18·86 | 523·0 | 42·1 | 722·6 | 42·3 | B |
| 22 0 | 18·85 | 523·6 | 42·0 | 723·8 | 42·2 | H |
| 23 0 | 20·65 | 522·2 | 41·9 | 720·8 | 41·9 | H |
| 19 0 0 | 20·85 | 522·5 | 41·7 | 724·0 | 41·7 | H |
| 1 0 | 20·42 | 526·5 | 41·6 | 724·5 | 41·5 | H |
| 2 0 | 20·29 | 528·1 | 41·4 | 728·8 | 41·4 | H |
| 3 0 | 18·67 | 523·2 | 41·2 | 728·0 | 41·0 | W |
| 4 0 | 18·81 | 524·1 | 41·0 | 731·1 | 40·8 | W |
| 5 0 | 18·58 | 521·3 | 40·9 | 731·3 | 40·6 | H |
| 6 0 | 18·94 | 521·4 | 40·7 | 730·5 | 40·3 | W |
| 7 0 | 17·87 | 519·9 | 40·4 | 730·0 | 39·9 | W |
| 8 0 | 17·74 | 522·5 | 40·1 | 730·2 | 39·5 | W |
| 9 0 | 18·05 | 522·4 | 39·9 | 726.0 | 39·0 | W |
| 10 0 | 17·83 | 521·4 | 39·6 | 726·3 | 38·5 | W |
| 11 0 | 18·07 | 521·1 | 39·2 | 725·3 | 38·0 | B |
| 12 0 | 18·10 | 520·9 | 38·8 | 727·0 | 37·4 | B |
| 13 0 | 25 18·08 | 520·6 | 38·3 | 729·1 | 36·8 | B |
| 14 0 | 18·18 | 520·4 | 37·8 | 732·4 | 36·3 | B |
| 15 0 | 18·00 | 519·2 | 37·3 | 733·7 | 35·6 | B |
| 16 0 | 17·53 | 520·7 | 36·9 | 736·1 | 35·0 | B |
| 17 0 | 17·84 | 519·9 | 36·4 | 739·7 | 34·5 | B |
| 18 0 | 17·46 | 522·5 | 36·0 | 740·6 | 34·3 | B |
| 19 0 | 17·46 | 522·4 | 35·6 | 740·9 | 34·0 | W |
| 20 0 | 17·60 | 522·0 | 35·1 | 735·9 | 33·6 | W |
| 21 0 | 18·28 | 521·7 | 34·9 | 738·3 | 33·4 | H |
| 22 0 | 18·40 | 519·3 | 34·6 | 728·7 | 33·2 | W |
| 23 0 | 19·39 | 519·7 | 34·3 | 719·1 | 33·3 | W |
| 20 0 0 | 21·07 | 522·9 | 34·2 | 719·7 | 33·7 | H |
| 1 0 | 20·72 | 524·9 | 34·2 | 729·8 | 34·5 | H |
| 2 0 | 20·92 | 525·2 | 34·5 | ..... | ..... | W |
| 3 0 | 20·94 | 526·2 | 34·9 | 735·5 | 36·0 | W |
| 4 0 | 20·25 | 526·1 | 35·4 | 738·8 | 36·9 | W |
| 5 0 | 19·48 | 525·2 | 36·0 | 751·7 | 37·5 | W |
| 6 0 | 18·90 | 523·6 | 36·7 | 735·6 | 37·6 | B |
| 7 0 | 18·84 | 526·2 | 36·9 | 732·7 | 37·6 | B |
| 8 0 | 17·56 | 525·0 | 37·0 | 734·6 | 37·4 | B |
| 9 0 | 18·13 | 525·5 | 36·8 | 727·6 | 36·9 | B |
| 10 0 | 17·93 | 526·3 | 36·6 | 729·6 | 36·5 | B |
| 11 0 | 16·18 | 523·4 | 36·3 | 730·1 | 35·9 | H |
| 12 0 | 18·01 | 524·5 | 35·9 | 729·2 | 35·4 | H |
| | | | | | | H |
| 13 0 | 25 17·96 | 523·2 | 35·6 | 730·8 | 35·0 | |
| 14 0 | 17·36 | 521·7 | 35·2 | 734·1 | 34·5 | H |
| 15 0 | 17·56 | 521·8 | 34·9 | 739·7 | 34·2 | H |
| 16 0 | 17·53 | 520·5 | 34·5 | 739·2 | 33·7 | H |
| 17 0 | 17·93 | 522·8 | 34·2 | 737·1 | 33·3 | H |
| 18 0 | 18·10 | 524·1 | 33·9 | 737·8 | 33·2 | H |
| 19 0 | 17·76 | 524·5 | 33·7 | 734·8 | 33·0 | B |
| 20 0 | 17·93 | 523·8 | 33·4 | 735·4 | 32·9 | B |

| Göttingen Mean Time of Declination Obs. | Declination. | Bifilar. | | Balance. | | Observer's Initial. |
|---|---|---|---|---|---|---|
| | | Corrected. | Thermometer. | Corrected. | Thermometer. | |
| d. h. m. | ° ′ | Sc. Div. | ° | Mic. Div. | ° | |
| 20 21 0 | 25 17·74 | 522·9 | 33·1 | 731·3 | 32·5 | W |
| 22 0 | 18·50 | 519·6 | 33·0 | 730·8 | 32·4 | B |
| 23 0 | 19·51 | 515·7 | 32·9 | 731·6 | 32·4 | W |
| 21 0 0 | 21·97 | 515·5 | 32·9 | 725·5 | 32·6 | B |
| 1 0 | 20·27 | 519·8 | 32·9 | 729·5 | 33·3 | W |
| 2 0 | 22·92 | 522·8 | 33·0 | 735·3 | 33·9 | B |
| 3 0 | 22·80 | 524·8 | 33·5 | 736·9 | 34·9 | B |
| 4 0 | 21·46 | 525·4 | 34·1 | 735·2 | 35·7 | B |
| 5 0 | 20·11 | 523·9 | 34·8 | 736·2 | 36·1 | B |
| 6 0 | 20·42 | 524·1 | 35·1 | 736·9 | 36·3 | H |
| 7 0 | 20·18 | 525·0 | 35·1 | 734·6 | 36·0 | H |
| 8 0 | 19·14 | 522·5 | 35·1 | 733·5 | 35·5 | H |
| 9 0 | 18·57 | 523·2 | 35·0 | 736·0 | 35·2 | H |
| 10 0 | 17·96 | 524·1 | 34·8 | 732·2 | 34·6 | H |
| 11 0 | 17·63 | 524·1 | 34·5 | 727·9 | 33·8 | W |
| 12 0 | 17·36 | 521·6 | 34·0 | 729·4 | 33·2 | W |
| 13 0† | 25 14·84 | 532·7 | 33·5 | 709·4 | 32·6 | W |
| 14 0† | 14·78 | 517·9 | 33·0 | 723·4 | 32·2 | W |
| 15 0 | 16·16 | 517·5 | 32·7 | 727·1 | 31·7 | W |
| 16 0 | 16·75 | 518·3 | 32·3 | 731·4 | 31·0 | W |
| 17 0 | 16·72 | 519·0 | 31·9 | 732·9 | 30·5 | W |
| 18 0 | 16·99 | 519·9 | 31·4 | 731·4 | 29·7 | W |
| 19 0 | 18·07 | 519·7 | 30·9 | 719·1 | 28·9 | H |
| 20 0 | 18·84 | 520·8 | 30·4 | 727·5 | 28·4 | H |
| 21 0 | 18·87 | 521·6 | 29·9 | 724·6 | 27·9 | B |
| 22 0 | 19·19 | 523·8 | 29·4 | 724·3 | 27·5 | H |
| 23 0 | 19·69 | 518·8 | 29·1 | 724·9 | 27·6 | H |
| 22 0 0 | 20·40 | 518·7 | 28·9 | 729·8 | 28·1 | H |
| 1 0 | 21·53 | 520·5 | 28·8 | 726·6 | 29·1 | H |
| 2 0 | 22·87 | 524·4 | 29·2 | 732·3 | 30·4 | H |
| 3 0 | 22·10 | 522·6 | 30·0 | 738·1 | 31·9 | H |
| 4 0 | 20·92 | 524·3 | 30·9 | 743·0 | 33·2 | H |
| 5 0 | 20·20 | 526·8 | 31·8 | 747·2 | 34·2 | H |
| 6 0 | 20·16 | 525·5 | 32·6 | 746·0 | 34·4 | W |
| 7 0† | 20·74 | 525·1 | 33·0 | 746·2 | 34·5 | W |
| 8 0† | 18·72 | 515·2 | 33·3 | 752·4 | 34·6 | W |
| 9 0† | 16·68 | 515·9 | 33·6 | 771·8 | 34·8 | W |
| 10 0 | 17·56 | 521·4 | 33·7 | 758·6 | 34·6 | W |
| 11 0 | 18·16 | 522·5 | 33·6 | 749·5 | 34·2 | B |
| 12 0 | 17·60 | 523·5 | 33·3 | 739·6 | 33·8 | B |
| 13 0 | 25 18·50 | 520·3 | 33·0 | 742·4 | 33·4 | B |
| 14 0 | 18·13 | 521·4 | 32·9 | 742·2 | 32·9 | B |
| 15 0 | 17·67 | 519·8 | 32·6 | 744·9 | 32·5 | B |
| 16 0 | 18·23 | 519·5 | 32·1 | 744·1 | 32·0 | B |
| 17 0 | 18·16 | 520·6 | 31·9 | 744·0 | 31·7 | B |
| 18 0 | 18·23 | 520·6 | 31·8 | 743·9 | 31·3 | B |
| 19 0 | 18·27 | 519·5 | 31·4 | 743·0 | 30·9 | W |
| 20 0 | 18·74 | 520·5 | 31·1 | 739·7 | 30·6 | W |
| 21 0 | 19·32 | 521·3 | 31·0 | 734·7 | 30·4 | H |
| 22 0 | 19·79 | 520·6 | 30·8 | 731·5 | 30·3 | W |
| 23 0 | 20·20 | 519·8 | 30·6 | 727·7 | 30·4 | W |
| 23 0 0 | 20·85 | 519·1 | 30·6 | 731·8 | 31·1 | W |
| 1 0 | 21·27 | 522·3 | 30·8 | 734·7 | 32·2 | H |
| 2 0 | 22·13 | 523·1 | 31·1 | 736·4 | 32·6 | W |
| 3 0 | 20·96 | 521·8 | 31·7 | 741·9 | 33·0 | W |
| 4 0 | 18·40 | 522·0 | 32·0 | 748·8 | 33·4 | W |

DECLINATION. Torsion removed,—Feb. 23d 3h, + 1½°. Effect of + 10° of Torsion = − 0′·84.

BIFILAR. Observed 2m after the Declination, $k$=0·000140. BALANCE. Observed 3m after the Declination, $k$=0·0000085.

† Extra Observations made.

| Göttingen Mean Time of Declination Obs. | | | Declination. | Bifilar. | | Balance. | | Observer's Initial. |
|---|---|---|---|---|---|---|---|---|
| | | | | Corrected. | Thermometer. | Corrected. | Thermometer. | |
| d. | h. | m. | ° ′ | Sc. Div. | ° | Mic. Div. | ° | |
| 23 | 5 | 0 | 25 17·86 | 523·0 | 32·3 | 748·2 | 33·5 | B |
| | 6 | 0 | 17·89 | 523·7 | 32·5 | 744·0 | 33·6 | B |
| | 7 | 0 | 18·13 | 525·4 | 32·5 | 741·7 | 33·4 | H |
| | 8 | 0 | 18·16 | 524·9 | 32·7 | 742·5 | 33·4 | H |
| | 9 | 0 | 17·53 | 522·8 | 32·7 | 743·5 | 33·4 | H |
| | 10 | 0 | 15·96 | 520·1 | 32·7 | 761·8 | 34·5 | B |
| | 11 | 0 | 15·12 | 523·7 | 32·9 | 752·6 | 34·3 | B |
| | 12 | 0 | 16·05 | 523·3 | 33·0 | 739·6 | 34·6 | B |
| | 13 | 0 | 25 16·32 | 521·0 | 33·4 | 740·0 | 35·0 | D |
| | 14 | 0 | 16·82 | 523·6 | 33·7 | 737·1 | 35·0 | D |
| | 15 | 0 | 16·55 | 519·6 | 34·0 | 743·0 | 35·5 | D |
| | 16 | 0 | 16·80 | 522·3 | 34·2 | 743·7 | 36·0 | D |
| | 17 | 0 | 17·09 | 523·1 | 34·5 | 741·3 | 36·4 | H |
| | 18 | 0 | 17·36 | 523·6 | 34·9 | 740·9 | 36·5 | H |
| | 19 | 0 | 17·49 | 523·4 | 35·0 | 739·0 | 36·5 | H |
| | 20 | 0 | 18·23 | 522·9 | 35·1 | 735·7 | 36·5 | H |
| | 21 | 0 | 18·57 | 524·6 | 35·2 | 739·7 | 36·5 | H |
| | 22 | 0 | 19·31 | 526·9 | 35·1 | 734·1 | 36·4 | W |
| | 23 | 0 | 20·45 | 527·0 | 35·1 | 733·6 | 36·5 | W |
| 24 | 0 | 0 | 20·89 | 526·3 | 35·2 | 734·7 | 36·8 | W |
| | 1 | 0 | 20·60 | 527·2 | 35·6 | 734·7 | 37·1 | W |
| | 2 | 0 | 20·49 | 528·4 | 35·9 | 734·2 | 37·5 | B |
| | 3 | 0 | 19·44 | 527·7 | 36·1 | 733·3 | 37·7 | B |
| | 4 | 0 | 18·99 | 525·3 | 36·4 | 744·0 | 38·0 | D |
| | 5 | 0 | 19·34 | 521·1 | 36·6 | 742·1 | 38·0 | D |
| | 6 | 0 | 19·24 | 524·3 | 36·7 | 734·5 | 37·4 | H |
| | 7 | 0 | 18·65 | 528·3 | 36·7 | 734·3 | 37·4 | H |
| | 8 | 0 | 18·21 | 527·4 | 36·7 | 740·7 | 37·6 | W |
| | 9 | 0 | 17·70 | 526·3 | 36·7 | 738·2 | 37·5 | W |
| | 10 | 0 | 17·63 | 527·2 | 36·6 | 737·7 | 37·5 | W |
| | 11 | 0 | 16·90 | 524·3 | 36·5 | 737·8 | 37·0 | W |
| | 12 | 0 | 16·95 | 524·1 | 36·1 | 736·0 | 36·5 | W |
| 25 | 13 | 0 | 25 17·09 | 523·2 | 33·2 | 741·7 | 33·3 | H |
| | 14 | 0 | 18·00 | 524·0 | 33·1 | 739·8 | 33·0 | H |
| | 15 | 0 | 17·31 | 523·9 | 33·0 | 740·0 | 32·6 | H |
| | 16 | 0 | 17·42 | 523·2 | 32·9 | 740·8 | 32·4 | H |
| | 17 | 0 | 16·95 | 523·9 | 32·7 | 741·6 | 32·3 | H |
| | 18 | 0 | 16·87 | 523·7 | 32·5 | 744·6 | 32·4 | H |
| | 19 | 0 | 16·38 | 523·8 | 32·5 | 742·5 | 32·4 | W |
| | 20 | 0 | 16·92 | 523·2 | 32·4 | 742·1 | 32·6 | W |
| | 21 | 0 | 16·89 | 522·3 | 32·4 | 739·6 | 32·8 | B |
| | 22 | 0 | 17·46 | 520·0 | 32·5 | 736·5 | 32·9 | W |
| | 23 | 0 | 19·64 | 519·2 | 32·7 | 730·4 | 33·3 | W |
| 26 | 0 | 0 | 21·63 | 518·9 | 32·9 | 731·3 | 33·7 | W |
| | 1 | 0 | 23·07 | 521·2 | 33·0 | 738·6 | 34·0 | W |
| | 2 | 0 | 24·08 | 521·5 | 33·2 | 743·6 | 34·5 | W |
| | 3 | 0 | 22·53 | 526·0 | 33·8 | 747·1 | 35·0 | W |
| | 4 | 0 | 19·91 | 523·5 | 34·0 | 745·7 | 35·3 | W |
| | 5 | 0 | 18·23 | 525·6 | 34·3 | 751·8 | 35·3 | W |
| | 6 | 0 | 18·74 | 524·4 | 34·2 | 745·3 | 35·0 | W |
| | 7 | 0 | 17·98 | 527·6 | 34·2 | 743·7 | 34·5 | H |
| | 8 | 0 | 17·98 | 527·0 | 34·0 | 742·5 | 34·0 | H |
| | 9 | 0 | 17·96 | 525·5 | 33·9 | 743·3 | 33·6 | H |
| | 10 | 0 | 17·51 | 525·2 | 33·5 | 745·4 | 33·3 | H |
| | 11 | 0 | 16·73 | 524·6 | 33·2 | 745·8 | 32·9 | B |
| | 12 | 0 | 17·09 | 523·4 | 33·0 | 745·1 | 32·4 | B |

| Göttingen Mean Time of Declination Obs. | | | Declination. | Bifilar. | | Balance. | | Observer's Initial. |
|---|---|---|---|---|---|---|---|---|
| | | | | Corrected. | Thermometer. | Corrected. | Thermometer. | |
| d. | h. | m. | ° ′ | Sc. Div. | ° | Mic. Div. | ° | |
| 26 | 13 | 0 | 25 17·39 | 523·8 | 32·8 | 744·4 | 32·0 | B |
| | 14 | 0 | 17·42 | 523·8 | 32·5 | 742·2 | 31·6 | B |
| | 15 | 0 | 16·68 | 521·5 | 32·1 | 742·8 | 31·1 | B |
| | 16 | 0 | 16·12 | 520·8 | 31·8 | 741·0 | 30·5 | B |
| | 17 | 0 | 16·55 | 518·1 | 31·3 | 742·3 | 29·9 | B |
| | 18 | 0 | 16·18 | 521·5 | 30·9 | 732·6 | 29·3 | B |
| | 19 | 0 | 16·86 | 520·0 | 30·3 | 732·2 | 28·6 | H |
| | 20 | 0 | 16·82 | 522·9 | 29·9 | 730·5 | 28·2 | H |
| | 21 | 0 | 17·49 | 521·1 | 29·5 | 731·5 | 27·9 | W |
| | 22 | 0 | 18·70 | 519·6 | 29·2 | 725·6 | 28·0 | H |
| | 23 | 0 | 19·93 | 515·3 | 29·0 | 742·2 | 28·3 | H |
| 27 | 0 | 0 | 21·76 | 520·4 | 28·9 | 733·3 | 29·2 | H |
| | 1 | 0 | 23·39 | 519·5 | 29·2 | 741·9 | 30·0 | H |
| | 2 | 0 | 21·66 | 520·7 | 29·9 | 751·0 | 31·5 | H |
| | 3 | 0 | 20·77 | 523·4 | 30·9 | 754·1 | 33·2 | H |
| | 4 | 0 | 18·85 | 524·1 | 31·7 | 751·2 | 34·3 | H |
| | 5 | 0 | 17·60 | 523·9 | 32·8 | 753·9 | 35·2 | H |
| | 6 | 0 | 17·49 | 524·9 | 33·8 | 745·4 | 35·7 | B |
| | 7 | 0 | 17·49 | 525·1 | 34·1 | 742·2 | 35·7 | B |
| | 8 | 0 | 17·29 | 525·5 | 34·3 | 743·4 | 35·8 | B |
| | 9 | 0 | 17·48 | 526·3 | 34·6 | 740·7 | 35·7 | B |
| | 10 | 0 | 17·49 | 525·9 | 34·6 | 740·5 | 35·5 | B |
| | 11 | 0 | 17·36 | 525·4 | 34·6 | 743·4 | 35·4 | W |
| | 12 | 0 | 17·33 | 524·8 | 34·6 | 744·6 | 35·3 | W |
| | 13 | 0 | 25 16·82 | 524·4 | 34·5 | 743·4 | 35·1 | W |
| | 14 | 0 | 17·40 | 524·5 | 34·4 | 743·5 | 35·0 | W |
| | 15 | 0 | 17·34 | 524·9 | 34·3 | 740·6 | 34·9 | W |
| | 16 | 0 | 17·31 | 524·2 | 34·1 | 741·6 | 34·7 | W |
| | 17 | 0 | 16·35 | 524·6 | 34·0 | 741·9 | 34·6 | W |
| | 18 | 0 | 16·82 | 525·4 | 34·0 | 739·5 | 34·4 | W |
| | 19 | 0 | 16·15 | 524·7 | 34·0 | 739·1 | 34·2 | B |
| | 20 | 0 | 16·80 | 524·1 | 33·9 | 736·9 | 34·0 | B |
| | 21 | 0 | 16·50 | 523·0 | 33·7 | 740·9 | 34·0 | H |
| | 22 | 0 | 17·27 | 518·9 | 33·8 | 740·0 | 34·4 | B |
| | 23 | 0 | 19·51 | 518·4 | 33·8 | 736·7 | 34·9 | H |
| 28 | 0 | 0 | 20·99 | 521·6 | 34·1 | 735·3 | 35·4 | B |
| | 1 | 0 | 22·06 | 521·6 | 34·6 | 740·7 | 36·0 | B |
| | 2 | 0 | 22·20 | 525·3 | 35·0 | 745·7 | 36·9 | H |
| | 3 | 0 | 20·85 | 527·1 | 35·5 | 746·3 | 37·5 | H |
| | 4 | 0 | 18·84 | 525·9 | 36·0 | 752·7 | 38·0 | W |
| | 5 | 0 | 17·98 | 535·3 | 36·9 | 751·2 | 38·3 | B |
| | 6 | 0 | 18·75 | 533·1 | 36·7 | 746·3 | 38·5 | W |
| | 7 | 0† | 20·30 | 518·5 | 37·0 | 764·9 | 38·3 | W |
| | 8 | 0† | 06·51 | 500·7 | 37·1 | 813·6 | 38·5 | W |
| | 9 | 0† | 13·32 | 505·3 | 37·4 | 800·0 | 38·7 | W |
| | 10 | 0† | 08·70 | 507·1 | 37·6 | 765·4 | 38·8 | W |
| | 11 | 0† | 03·99 | 491·2 | 37·7 | 741·3 | 38·9 | H |
| | 12 | 0† | 13·16 | 514·0 | 37·8 | 743·7 | 38·9 | H |
| | 13 | 0† | 25 16·86 | 518·6 | 37·9 | 761·6 | 39·0 | H |
| | 14 | 0† | 14·92 | 512·6 | 37·9 | 759·1 | 39·1 | H |
| | 15 | 0† | 15·81 | 504·9 | 37·9 | 756·7 | 39·0 | H |
| | 16 | 0† | 20·08 | 520·4 | 37·9 | 667·4 | 39·0 | H |
| | 17 | 0† | 03·21 | 505·1 | 37·9 | 641·6 | 39·0 | H |
| | 18 | 0† | 12·65 | 527·6 | 37·9 | 664·5 | 39·2 | H |
| | 19 | 0† | 17·31 | 513·9 | 37·9 | 695·5 | 39·0 | W |
| | 20 | 0† | 15·81 | 518·9 | 37·9 | 717·7 | 38·8 | W |

DECLINATION. Magnet untouched, Feb. 23d—March 22d.

BIFILAR. Observed 2m after the Declination, $k$=0·000140. BALANCE. Observed 3m after the Declination, $k$=0·0000085.

† Extra Observations made.

| Göttingen Mean Time of Declination Obs. | Declination. | Bifilar. Corrected. | Bifilar. Thermometer. | Balance. Corrected. | Balance. Thermometer. | Observer's Initial. |
|---|---|---|---|---|---|---|
| d. h. m. | ° ′ | Sc. Div. | ° | Mic. Div. | ° | |
| 28 21 0 | 25 15·64 | 521·2 | 37·9 | 724·2 | 38·6 | B |
| 22 0 | 17·00 | 513·5 | 37·9 | 735·1 | 38·5 | W |
| 23 0 | 20·52 | 509·6 | 37·9 | 739·7 | 38·6 | W |
| 29 0 0 | 22·27 | 510·6 | 37·9 | 752·3 | 39·1 | W |
| 1 0 | 22·04 | 516·7 | 38·0 | 752·4 | 39·6 | W |
| 2 0 | 21·76 | 522·9 | 38·5 | 751·9 | 40·1 | W |
| 3 0 | 20·79 | 526·3 | 38·9 | 748·8 | 40·5 | W |
| 4 0 | 19·07 | 525·9 | 39·2 | 753·8 | 40·9 | W |
| 5 0 | 18·00 | 525·3 | 39·6 | 754·7 | 41·0 | W |
| 6 0 | 18·40 | 527·2 | 39·9 | 762·1 | 41·0 | W |
| 7 0 | 17·83 | 511·3 | 39·9 | 778·9 | 40·9 | H |
| 8 0 | 18·16 | 519·5 | 39·9 | 777·4 | 40·8 | H |
| 9 0 | 18·60 | 521·1 | 39·9 | 766·9 | 40·5 | H |
| 10 0† | 13·23 | 535·2 | 39·8 | 753·7 | 40·3 | H |
| 11 0† | 15·49 | 516·3 | 39·6 | 740·5 | 40·3 | B |
| 12 0† | 16·15 | 517·8 | 39·5 | 753·5 | 40·3 | B |
| 13 0 | 25 16·55 | 516·8 | 39·4 | 756·2 | 40·2 | B |
| 14 0 | 17·37 | 516·4 | 39·2 | 753·1 | 39·9 | B |
| 15 0† | 15·01 | 515·0 | 39·2 | 753·8 | 39·6 | B |
| 16 0 | 15·54 | 515·5 | 39·1 | 752·2 | 39·5 | B |
| 17 0 | 16·72 | 514·4 | 39·0 | 741·1 | 39·5 | B |
| 18 0 | 15·51 | 519·6 | 39·0 | 739·1 | 39·3 | B |
| 19 0 | 16·99 | 520·3 | 38·9 | 744·7 | 39·2 | H |
| 20 0 | 16·79 | 518·7 | 38·9 | 752·4 | 39·2 | H |
| 21 0 | 17·09 | 518·1 | 38·9 | 756·2 | 39·0 | W |
| 22 0 | 17·36 | 515·5 | 38·8 | 758·9 | 39·3 | H |
| 23 0 | 18·72 | 515·8 | 38·8 | 750·4 | 39·7 | H |
| 1 0 0 | 20·22 | 517·3 | 39·0 | 747·8 | 40·5 | H |
| 1 0 | 21·01 | 521·6 | 39·4 | 744·6 | 41·3 | H |
| 2 0 | 20·33 | 524·6 | 40·0 | 745·1 | 42·3 | H |
| 3 0 | 19·78 | 527·9 | 40·8 | 742·6 | 43·2 | H |
| 4 0 | 19·04 | 527·4 | 41·4 | 742·1 | 43·7 | W |
| 5 0 | 18·81 | 529·6 | 42·0 | 754·2 | 44·1 | B |
| 6 0 | 19·10 | 518·9 | 42·4 | 763·8 | 44·2 | B |
| 7 0 | 18·87 | 521·5 | 42·6 | 760·8 | 44·0 | B |
| 8 0 | 19·51 | 523·6 | 42·7 | 758·4 | 43·7 | B |
| 9 0 | 18·72 | 525·3 | 42·5 | 756·4 | 43·3 | B |
| 10 0† | 16·06 | 519·7 | 42·2 | 769·3 | 43·0 | B |
| 11 0† | 16·08 | 523·9 | 42·0 | 768·8 | 42·8 | W |
| 12 0 | 14·96 | 521·2 | 42·0 | 763·5 | 42·5 | W |
| 13 0 | 25 15·14 | 517·2 | 41·9 | 766·8 | 42·0 | W |
| 14 0 | 15·88 | 519·8 | 41·6 | 762·5 | 41·5 | W |
| 15 0 | 15·51 | 518·7 | 41·1 | 761·9 | 41·0 | W |
| 16 0 | 14·80 | 520·3 | 40·9 | 755·6 | 40·5 | W |
| 17 0 | 16·80 | 521·0 | 40·5 | 753·0 | 40·0 | W |
| 18 0 | 16·89 | 522·5 | 40·1 | 753·0 | 39·6 | W |
| 19 0† | 16·05 | 521·5 | 39·9 | 754·0 | 39·2 | B |
| 20 0† | 15·31 | 525·2 | 39·8 | 749·6 | 39·0 | B |
| 21 0 | 16·80 | 512·2 | 39·4 | 750·1 | 38·9 | H |
| 22 0 | 19·37 | 515·9 | 39·1 | 740·4 | 38·8 | B |
| 23 0 | 19·34 | 516·8 | 39·1 | 735·2 | 39·2 | H |
| 2 0 0 | 22·18 | 521·9 | 39·1 | 739·2 | 39·9 | H |
| 1 0 | 21·93 | 516·7 | 39·4 | 740·6 | 40·6 | H |
| 2 0† | 26·27 | 531·8 | 39·8 | 744·7 | 41·5 | H |
| 3 0† | 24·22 | 519·4 | 40·2 | 750·5 | 42·3 | H |
| 4 0 | 21·79 | 522·2 | 40·8 | 746·7 | 42·9 | H |

| Göttingen Mean Time of Declination Obs. | Declination. | Bifilar. Corrected. | Bifilar. Thermometer. | Balance. Corrected. | Balance. Thermometer. | Observer's Initial. |
|---|---|---|---|---|---|---|
| d. h. m. | ° ′ | Sc. Div. | ° | Mic. Div. | ° | |
| 2 5 0 | 25 20·85 | 528·4 | 41·2 | 754·5 | 43·2 | H |
| 6 0 | 20·22 | 523·7 | 41·8 | 754·8 | 43·0 | W |
| 7 0 | 20·38 | 523·3 | 41·9 | 753·5 | 42·9 | W |
| 8 0† | 19·79 | 524·8 | 41·8 | 761·2 | 42·5 | W |
| 9 0† | 07·94 | 515·0 | 41·7 | 774·3 | 42·2 | W |
| 10 0† | 06·03 | 509·6 | 41·5 | 584·4 | 42·0 | W |
| 11 0† | 21·12 | 497·0 | 41·3 | 497·0 | 41·8 | H |
| 12 0† | 08·85 | 543·4 | 41·0 | 581·8? | 41·8 | H |
| 3 13 0† | 25 24·15 | 515·1 | 40·3 | 616·0 | 40·5 | B |
| 14 0† | 12·11 | 512·5 | 40·1 | 606·7 | 40·6 | B |
| 15 0† | 10·77 | 512·9 | 40·1 | 662·9 | 40·7 | B |
| 16 0† | 13·39 | 512·6 | 40·0 | 688·8 | 40·4 | B |
| 17 0† | 15·41 | 517·0 | 40·0 | 697·8 | 40·0 | B |
| 18 0† | 14·43 | 520·1 | 39·8 | 704·6 | 39·6 | B |
| 19 0 | 16·55 | 517·6 | 39·5 | 713·5 | 39·2 | H |
| 20 0† | 17·04 | 509·8 | 39·2 | 718·9 | 38·9 | H |
| 21 0† | 22·62 | 511·9 | 39·0 | 727·9 | 38·5 | W |
| 22 0 | 18·13 | 518·1 | 38·8 | 733·8 | 38·7 | H |
| 23 0 | 18·79 | 515·3 | 38·8 | 731·2 | 39·0 | H |
| 4 0 0 | 23·79 | 520·1 | 38·8 | 727·0 | 39·4 | H |
| 1 0 | 22·98 | 515·8 | 38·9 | 732·3 | 39·6 | H |
| 2 0 | 23·61 | 524·9 | 39·0 | 745·0 | 39·8 | H |
| 3 0† | 20·43 | 513·1 | 39·0 | 781·5 | 40·0 | H |
| 4 0† | 20·40 | 522·6 | 39·1 | 785·7 | 39·9 | H |
| 5 0† | 17·53 | 530·7 | 39·1 | 794·3 | 39·9 | H |
| 6 0† | 17·96 | 525·2 | 39·1 | 775·0 | 39·5 | B |
| 7 0† | 25 06·48 | 503·4 | 39·0 | 882·3 | 39·3 | B |
| 8 0† | 24 59·51 | 533·8 | 39·0 | 757·5 | 39·2 | H |
| 9 0† | 25 12·08 | 515·5 | 38·9 | 748·7 | 39·1 | B |
| 10 0† | 25·60 | 523·8 | 38·9 | 655·8 | 38·9 | B |
| 11 0† | 19·82 | 507·0 | 38·7 | 629·3 | 38·5 | B |
| 12 0† | 16·12 | 517·3 | 38·4 | 711·7 | 38·4 | B |
| 13 0 | 25 16·80 | 517·0 | 38·1 | 730·6 | 37·9 | W |
| 14 0† | 22·13 | 512·3 | 37·9 | 677·1 | 37·2 | W |
| 15 0† | 17·33 | 511·9 | 37·6 | 634·7 | 36·8 | W |
| 16 0† | 21·10 | 505·2 | 37·1 | 688·1 | 36·5 | W |
| 17 0† | 18·94 | 515·0 | 36·9 | 686·9 | 36·1 | W |
| 18 0 | 16·48 | 512·6 | 36·6 | 713·7 | 35·5 | W |
| 19 0† | 16·32 | 518·0 | 36·1 | 715·9 | 35·0 | B |
| 20 0† | 18·65 | 509·5 | 35·9 | 722·2 | 34·5 | B |
| 21 0† | 21·16 | 512·0 | 35·3 | 729·7 | 34·0 | H |
| 22 0† | 19·98 | 512·8 | 34·9 | 732·2 | 33·9 | B |
| 23 0† | 19·64 | 517·1 | 34·8 | 742·2 | 34·0 | B |
| 5 0 0† | 21·59 | 500·2 | 34·7 | 763·9 | 34·6 | B |
| 1 0† | 22·40 | 510·8 | 34·7 | 762·6 | 35·6 | H |
| 2 0† | 27·14 | 524·8 | 35·1 | 778·0 | 36·3 | H |
| 3 0† | 17·22 | 521·0 | 35·7 | 823·0 | 37·1 | B |
| 4 0† | 19·58 | 527·1 | 36·1 | 796·6 | 37·8 | B |
| 5 0† | 19·22 | 524·1 | 36·7 | 777·7 | 38·3 | B |
| 6 0† | 15·31 | 509·5 | 37·0 | 785·9 | 38·6 | W |
| 7 0† | 04·34 | 519·9 | 37·4 | 775·7 | 38·5 | W |
| 8 0† | 05·69 | 527·9 | 37·7 | 767·9 | 38·7 | W |
| 9 0† | 14·84 | 525·2 | 37·8 | 738·9 | 38·8 | W |
| 10 0† | 09·98 | 512·1 | 37·9 | 717·2 | 38·9 | W |
| 11 0† | 16·36 | 474·7 | 37·9 | 563·3 | 38·9 | H |
| 12 0† | 07·65 | 517·0 | 37·7 | 608·8 | 38·5 | H |

DECLINATION. Magnet untouched, Feb. 23d—March 22d.

BIFILAR. Observed 2m after the Declination, $k=0{\cdot}000140$. BALANCE. Observed 3m after the Declination, $k=0{\cdot}0000085$.

† Extra Observations made.

March 2d 11h. The observation of the declination was taken 18s after the time.

March 2d 12h. The reading of the balance magnetometer at 12h 3m was lost, the reading given has been interpolated between observations at 11h 58m and 12h 6m.

| Göttingen Mean Time of Declination Obs. | Declination. | Bifilar. | | Balance. | | Observer's Initial. |
|---|---|---|---|---|---|---|
| | | Corrected. | Thermometer. | Corrected. | Thermometer. | |
| d. h. m. | ° ′ | Sc. Div. | ° | Mic. Div. | ° | |
| 5 13 0† | 25 16·28 | 499·2 | 37·5 | 581·0 | 38·4 | H |
| 14 0† | 03·00 | 497·1 | 37·3 | 571·6 | 38·2 | H |
| 15 0† | 13·37 | 502·9 | 37·2 | 581·3 | 38·0 | H |
| 16 0† | 13·02 | 484·5 | 37·1 | 579·9 | 37·7 | H |
| 17 0† | 26·16 | 498·7 | 37·0 | 549·6 | 37·2 | H |
| 18 0† | 13·43 | 520·8 | 36·8 | 606·2 | 36·9 | H |
| 19 0† | 16·80 | 517·9 | 36·5 | 678·9 | 36·4 | W |
| 20 0 | 16·38 | 516·2 | 36·1 | 709·8 | 35·8 | W |
| 21 0 | 16·03 | 517·1 | 35·9 | 720·8 | 35·4 | B |
| 22 0 | 18·60 | 512·7 | 35·7 | 731·2 | 35·2 | W |
| 23 0† | 19·46 | 503·0 | 35·4 | 737·9 | 35·5 | W |
| 6 0 0† | 23·78 | 497·9 | 35·3 | 745·0 | 36·0 | W |
| 1 0† | 23·99 | 507·9 | 35·7 | 771·0 | 36·7 | B |
| 2 0† | 27·07 | 523·3 | 36·0 | 775·5 | 37·5 | W |
| 3 0† | 18·88 | 513·3 | 36·5 | 872·8 | 38·1 | B |
| 4 0† | 25·41 | 530·6 | 37·0 | 846·3 | 38·9 | W |
| 5 0† | 10·67 | 530·5 | 37·5 | 848·3 | 39·2 | B |
| 6 0† | 20·94 | 515·2 | 37·8 | 804·6 | 39·5 | H |
| 7 0† | 19·35 | 517·3 | 37·9 | 787·9 | 39·2 | H |
| 8 0 | 18·00 | 514·7 | 37·9 | 762·6 | 39·0 | H |
| 9 0† | 15·71 | 519·0 | 37·8 | 759·1 | 38·6 | H |
| 10 0 | 17·10 | 519·5 | 37·8 | 743·1 | 38·5 | H |
| 11 0† | 16·19 | 520·8 | 37·8 | 743·4 | 38·1 | B |
| 12 0† | 08·80 | 511·3 | 37·5 | 738·7 | 38·0 | B |
| 13 0† | 25 12·06 | 523·4 | 37·3 | 701·5 | 37·9 | B |
| 14 0† | 14·87 | 513·8 | 37·2 | 721·8 | 37·8 | B |
| 15 0† | 19·10 | 517·5 | 37·1 | 733·3 | 37·5 | B |
| 16 0† | 17·12 | 513·0 | 37·0 | 717·0 | 37·1 | B |
| 17 0† | 27·79 | 485·1 | 36·9 | 620·0 | 36·8 | B |
| 18 0† | 28·40 | 498·3 | 36·7 | 611·4 | 36·7 | B |
| 19 0† | 25·14 | 516·5 | 36·5 | 601·0 | 36·7 | H |
| 20 0† | 17·74 | 519·9 | 36·4 | 668·7 | 36·6 | H |
| 21 0† | 16·75 | 513·9 | 36·2 | 707·5 | 36·4 | W |
| 22 0† | 18·20 | 507·3 | 36·0 | 729·0 | 36·4 | W |
| 23 0† | 19·55 | 504·6 | 36·0 | 742·4 | 36·5 | H |
| 7 0 0† | 20·96 | 508·4 | 36·1 | 750·0 | 36·9 | H |
| 1 0† | 21·03 | 514·9 | 36·2 | 745·2 | 37·4 | H |
| 2 0 | 25·19 | 509·9 | 36·6 | 762·8 | 38·0 | H |
| 3 0† | 18·47 | 528·2 | 37·1 | 813·1 | 38·8 | H |
| 4 0† | 16·28 | 521·1 | 37·6 | 850·8 | 39·5 | H |
| 5 0† | 18·77 | 529·5 | 38·1 | 846·7 | 40·0 | W |
| 6 0† | 01·11 | 559·2 | 38·6 | 841·2 | 40·4 | B |
| 7 0† | 09·51 | 508·0 | 38·9 | 844·0 | 40·5 | B |
| 8 0† | 14·85 | 507·6 | 39·0 | 834·6 | 40·7 | B |
| 9 0† | 21·95 | 508·0 | 39·1 | 710·3 | 40·5 | B |
| 10 0† | 15·07 | 514·7 | 39·4 | 740·7 | 40·2 | B |
| 11 0† | 22·31 | 514·7 | 39·0 | 601·1 | 39·7 | W |
| 12 0† | 06·21 | 519·6 | 38·9 | 605·7 | 39·3 | W |
| 13 0† | 25 07·35 | 496·2 | 38·7 | 649·4 | 38·9 | W |
| 14 0† | 18·68 | 512·3 | 38·4 | 660·2 | 38·5 | W |
| 15 0† | 32·62 | 489·7 | 38·0 | 582·6 | 38·3 | W |
| 16 0† | 17·60 | 491·5 | 37·9 | 547·9 | 38·0 | W |
| 17 0† | 11·32 | 518·6 | 37·8 | 626·0 | 37·9 | W |
| 18 0† | 18·08 | 503·2 | 37·7 | 666·0 | 37·7 | W |
| 19 0† | 22·24 | 517·6 | 37·6 | 695·6 | 37·7 | B |
| 20 0† | 24·59 | 523·8 | 37·4 | 699·0 | 37·6 | B |
| 7 21 0† | 25 20·72 | 496·9 | 37·2 | 731·0 | 37·4 | H |
| 22 0† | 21·06 | 508·7 | 37·1 | 740·3 | 37·3 | B |
| 23 0† | 18·23 | 509·5 | 37·0 | 745·9 | 37·3 | H |
| 8 0 0 | 20·90 | 513·5 | 37·0 | 747·3 | 37·5 | B |
| 1 0 | 22·44 | 520·9 | 37·0 | 747·8 | 37·5 | H |
| 2 0 | 24·53 | 523·8 | 37·0 | 752·8 | 37·5 | H |
| 3 0 | 22·50 | 516·4 | 37·0 | 762·6 | 37·5 | B |
| 4 0 | 22·06 | 524·7 | 37·0 | 774·8 | 37·5 | H |
| 5 0† | 20·49 | 526·6 | 37·0 | 783·8 | 37·4 | B |
| 6 0† | 18·27 | 526·7 | 37·0 | 801·2 | 37·5 | W |
| 7 0† | 05·40 | 516·8 | 37·0 | 831·6 | 37·7 | W |
| 8 0† | 11·21 | 519·9 | 37·2 | 804·1 | 38·2 | W |
| 9 0† | 14·13 | 518·1 | 37·5 | 791·6 | 38·4 | W |
| 10 0† | 19·86 | 520·6 | 37·7 | 691·9 | 38·5 | W |
| 11 0† | 11·52 | 513·7 | 37·9 | 707·0 | 38·9 | H |
| 12 0† | 14·13 | 516·8 | 38·0 | 713·2 | 39·2 | H |
| 13 0† | 25 15·36 | 513·6 | 38·2 | 726·8 | 39·6 | H |
| 14 0† | 28·50 | 493·4 | 38·5 | 667·0 | 40·3 | H |
| 15 0† | 19·64 | 516·4 | 39·0 | 644·2 | 41·0 | H |
| 16 0† | 15·51 | 517·6 | 39·3 | 710·7 | 41·5 | H |
| 17 0† | 17·76 | 516·9 | 39·8 | 729·8 | 41·9 | H |
| 18 0 | 17·24 | 517·5 | 40·3 | 740·7 | 42·3 | H |
| 19 0 | 18·99 | 520·6 | 40·8 | 745·3 | 42·6 | W |
| 20 0 | 17·06 | 518·0 | 41·0 | 751·7 | 42·8 | W |
| 21 0† | 17·49 | 515·9 | 41·4 | 756·5 | 43·0 | B |
| 22 0 | 18·07 | 510·2 | 41·7 | 759·2 | 43·5 | W |
| 23 0 | 19·82 | 508·0 | 42·0 | 747·9 | 44·0 | W |
| 9 0 0 | 21·77 | 514·4 | 42·4 | 747·3 | 44·3 | W |
| 1 0 | 22·94 | 518·4 | 42·7 | 737·6 | 44·5 | W |
| 2 0 | 22·50 | 517·3 | 43·0 | 747·3 | 45·0 | W |
| 3 0 | 20·85 | 520·6 | 43·4 | 758·4 | 45·5 | W |
| 4 0 | 19·78 | 524·0 | 43·8 | 771·8 | 46·0 | W |
| 5 0 | 19·76 | 518·8 | 44·3 | 780·4 | 46·3 | W |
| 6 0† | 13·46 | 525·5 | 44·7 | 799·2 | 46·6 | H |
| 7 0 | 15·54 | 525·9 | 45·0 | 793·0 | 46·7 | H |
| 8 0 | 17·56 | 524·5 | 45·1 | 768·5 | 46·4 | H |
| 9 0† | 05·35 | 535·0 | 45·0 | 760·1 | 45·9 | H |
| 10 0† | 10·11 | 529·7 | 45·0 | 733·3 | 45·6 | H |
| 11 0† | 14·06 | 517·3 | 44·9 | 728·6 | 45·5 | B |
| 12 0† | 16·32 | 508·0 | 44·8 | 734·8 | 45·2 | B |
| 10 13 0 | 25 16·73 | 518·9 | 43·7 | 725·9 | 43·6 | W |
| 14 0 | 16·79 | 518·3 | 43·5 | 732·1 | 43·5 | W |
| 15 0 | 17·29 | 515·5 | 43·3 | 732·5 | 43·4 | W |
| 16 0 | 17·37 | 513·4 | 43·1 | 739·3 | 43·4 | W |
| 17 0† | 14·04 | 515·7 | 43·0 | 741·4 | 43·4 | W |
| 18 0 | 17·42 | 519·8 | 43·0 | 746·1 | 43·4 | W |
| 19 0 | 16·01 | 520·3 | 43·0 | 745·7 | 43·3 | B |
| 20 0 | 16·95 | 517·7 | 43·0 | 752.7 | 43·3 | B |
| 21 0 | 18·34 | 516·3 | 43·0 | 751·5 | 43·3 | H |
| 22 0 | 18·13 | 510·0 | 43·0 | 745·5 | 43·2 | H |
| 23 0 | 19·44 | 513·3 | 43·0 | 746·0 | 43·6 | H |
| 11 0 0 | 21·51 | 510·1 | 43·0 | 740·6 | 44·0 | H |
| 1 0 | 24·22 | 515·4 | 43·3 | 745·5 | 44·5 | H |
| 2 0 | 22·58 | 515·0 | 43·6 | 748·7 | 45·0 | H |
| 3 0 | 21·59 | 521·7 | 44·0 | 750·9 | 45·3 | H |
| 4 0 | 20·16 | 523·1 | 44·3 | 752·0 | 45·7 | H |

DECLINATION. Magnet untouched, Feb. 23d—March 22d.

BIFILAR. Observed 2m after the Declination, $k$=0·000140. BALANCE. Observed 3m after the Declination, $k$=0·0000085.

† Extra Observations made.

| Göttingen Mean Time of Declination Obs. | | | Declination. | | Bifilar. | | Balance. | | Observer's Initial. |
|---|---|---|---|---|---|---|---|---|---|
| | | | | | Corrected. | Thermometer. | Corrected. | Thermometer. | |
| d. | h. | m. | ° | ′ | Sc. Div. | ° | Mic. Div. | ° | |
| 11 | 5 | 0 | 25 | 18·81 | 522·5 | 44·7 | 752·7 | 46·0 | H |
| | 6 | 0 | | 18·10 | 524·1 | 44·9 | 748·8 | 45·8 | W |
| | 7 | 0 | | 17·15 | 523·3 | 44·9 | 747·0 | 45·4 | W |
| | 8 | 0 | | 17·61 | 522·5 | 44·8 | 746·8 | 44·8 | W |
| | 9 | 0 | | 17·96 | 526·4 | 44·3 | 743·3 | 44·0 | W |
| | 10 | 0† | | 14·73 | 517·4 | 43·9 | 741·7 | 43·5 | W |
| | 11 | 0† | | 15·11 | 512·1 | 43·5 | 757·7 | 42·9 | H |
| | 12 | 0 | | 15·47 | 519·5 | 43·2 | 746·1 | 42·3 | H |
| | 13 | 0 | 25 | 16·93 | 512·6 | 42·7 | 749·2 | 41·7 | H |
| | 14 | 0 | | 17·58 | 516·8 | 42·2 | 745·7 | 41·1 | H |
| | 15 | 0 | | 17·61 | 517·3 | 41·8 | 745·9 | 40·5 | H |
| | 16 | 0 | | 16·45 | 516·8 | 41·3 | 746·0 | 40·0 | H |
| | 17 | 0 | | 16·32 | 518·4 | 41·0 | 748·7 | 39·5 | H |
| | 18 | 0 | | 16·43 | 518·3 | 40·5 | 750·7 | 38·9 | H |
| | 19 | 0 | | 16·80 | 519·0 | 40·0 | 750·9 | 38·4 | W |
| | 20 | 0 | | 16·62 | 516·9 | 39·6 | 758·3 | 38·0 | W |
| | 21 | 0 | | 16·66 | 515·3 | 39·2 | 764·5 | 37·9 | B |
| | 22 | 0 | | 16·97 | 511·1 | 39·0 | 761·4 | 37·8 | W |
| | 23 | 0 | | 19·59 | 507·7 | 38·9 | 754·3 | 38·0 | W |
| 12 | 0 | 0 | | 22·17 | 509·6 | 38·8 | 753·8 | 38·3 | W |
| | 1 | 0 | | 24·24 | 507·9 | 38·9 | 756·9 | 38·6 | B |
| | 2 | 0 | | 25·33 | 517·1 | 38·9 | 763·2 | 39·0 | W |
| | 3 | 0 | | 25·16 | 517·4 | 38·9 | 769·6 | 39·6 | W |
| | 4 | 0 | | 22·75 | 523·2 | 39·2 | 773·0 | 40·1 | W |
| | 5 | 0 | | 18·34 | 522·4 | 39·6 | 800·2 | 40·5 | W |
| | 6 | 0 | | 19·12 | 522·3 | 39·9 | 794·6 | 41·0 | H |
| | 7 | 0 | | 18·84 | 519·4 | 40·1 | 788·7 | 41·0 | H |
| | 8 | 0 | | 18·05 | 520·3 | 40·1 | 778·1 | 40·6 | H |
| | 9 | 0 | | 17·42 | 519·8 | 40·1 | 772·2 | 40·3 | H |
| | 10 | 0 | | 15·96 | 521·0 | 40·0 | 773·2 | 40·0 | H |
| | 11 | 0† | | 19·46 | 532·3 | 39·9 | 736·0 | 39·6 | B |
| | 12 | 0† | | 14·06 | 520·7 | 39·7 | 711·8 | 39·2 | B |
| | 13 | 0† | 25 | 14·40 | 510·9 | 39·4 | 723·7 | 38·9 | B |
| | 14 | 0 | | 14·18 | 517·7 | 39·0 | 718·6 | 38·5 | B |
| | 15 | 0 | | 14·06 | 513·7 | 38·8 | 741·5 | 37·9 | B |
| | 16 | 0 | | 15·38 | 515·4 | 38·4 | 746·6 | 37·4 | B |
| | 17 | 0 | | 15·51 | 516·6 | 38·0 | 731·1 | 37·0 | B |
| | 18 | 0 | | 14·67 | 520·3 | 37·7 | 742·2 | 36·6 | B |
| | 19 | 0 | | 14·96 | 521·1 | 37·4 | 747·4 | 36·2 | H |
| | 20 | 0 | | 15·01 | 518·9 | 37·0 | 756·0 | 35·8 | H |
| | 21 | 0 | | 14·80 | 516·9 | 36·7 | 760·1 | 35·5 | W |
| | 22 | 0 | | 16·32 | 515·9 | 36·4 | 756·8 | 35·6 | H |
| | 23 | 0 | | 18·16 | 512·5 | 36·3 | 755·4 | 36·1 | H |
| 13 | 0 | 0 | | 20·49 | 517·6 | 36·3 | 750·0 | 36·7 | H |
| | 1 | 0 | | 21·83 | 518·7 | 36·7 | 747·1 | 37·7 | H |
| | 2 | 0 | | 23·54 | 524·8 | 37·2 | 750·4 | 38·6 | H |
| | 3 | 0 | | 21·53 | 523·4 | 37·8 | 757·2 | 39·4 | H |
| | 4 | 0 | | 20·74 | 524·7 | 38·2 | 761·5 | 40·0 | H |
| | 5 | 0 | | 19·10 | 525·6 | 38·7 | 766·0 | 40·2 | H |
| | 6 | 0 | | 15·51 | 522·5 | 39·0 | 775·3 | 40·3 | B |
| | 7 | 0 | | 18·16 | 527·5 | 39·1 | 762·7 | 40·2 | B |
| | 8 | 0 | | 18·20 | 527·1 | 39·1 | 755·4 | 40·0 | B |
| | 9 | 0 | | 17·96 | 529·5 | 39·1 | 751·5 | 39·7 | B |
| | 10 | 0 | | 17·89 | 526·3 | 39·0 | 755·2 | 39·5 | B |
| | 11 | 0 | | 17·53 | 528·3 | 38·9 | 755·5 | 39·3 | W |
| | 12 | 0 | | 17·46 | 527·3 | 38·8 | 754·0 | 39·0 | W |

| Göttingen Mean Time of Declination Obs. | | | Declination. | | Bifilar. | | Balance. | | Observer's Initial. |
|---|---|---|---|---|---|---|---|---|---|
| | | | | | Corrected. | Thermometer. | Corrected. | Thermometer. | |
| d. | h. | m. | ° | ′ | Sc. Div. | ° | Mic. Div. | ° | |
| 13 | 13 | 0 | 25 | 17·04 | 524·2 | 38·6 | 754·9 | 38·8 | W |
| | 14 | 0 | | 16·89 | 522·7 | 38·4 | 754·7 | 38·5 | W |
| | 15 | 0 | | 16·86 | 524·6 | 38·2 | 752·1 | 38·3 | W |
| | 16 | 0 | | 16·89 | 525·1 | 38·0 | 751·4 | 38·0 | W |
| | 17 | 0 | | 17·27 | 524·5 | 37·9 | 751·8 | 37·8 | W |
| | 18 | 0 | | 16·86 | 523·5 | 37·8 | 752·0 | 37·5 | W |
| | 19 | 0 | | 16·63 | 524·4 | 37·6 | 750·6 | 37·1 | B |
| | 20 | 0 | | 16·70 | 522·8 | 37·3 | 755·1 | 36·7 | B |
| | 21 | 0 | | 15·62 | 519·6 | 37·0 | 756·8 | 36·3 | H |
| | 22 | 0 | | 17·31 | 513·5 | 36·9 | 758·7 | 36·5 | B |
| | 23 | 0 | | 19·88 | 509·9 | 36·7 | 757·2 | 36·8 | H |
| 14 | 0 | 0 | | 20·87 | 515·8 | 36·9 | 750·3 | 37·8 | B |
| | 1 | 0 | | 22·53 | 517·1 | 37·3 | 747·9 | 39·2 | H |
| | 2 | 0 | | 22·13 | 522·9 | 38·1 | 753·6 | 40·7 | B |
| | 3 | 0 | | 21·56 | 522·6 | 39·0 | 754·6 | 42·0 | H |
| | 4 | 0 | | 20·05 | 522·4 | 40·0 | 751·1 | 43·0 | H |
| | 5 | 0 | | 18·85 | 524·5 | 40·9 | 754·2 | 43·5 | B |
| | 6 | 0 | | 18·37 | 523·6 | 41·6 | 752·7 | 43·6 | W |
| | 7 | 0 | | 18·27 | 526·0 | 41·9 | 749·7 | 43·5 | W |
| | 8 | 0 | | 18·14 | 527·7 | 41·9 | 747·6 | 43·3 | W |
| | 9 | 0 | | 18·65 | 531·1 | 41·9 | 745·3 | 43·0 | W |
| | 10 | 0 | | 18·03 | 529·5 | 41·8 | 747·5 | 42·6 | W |
| | 11 | 0 | | 17·29 | 524·4 | 41·5 | 755·0 | 42·2 | H |
| | 12 | 0 | | 16·93 | 526·2 | 41·2 | 752·2 | 41·8 | H |
| | 13 | 0 | 25 | 17·39 | 525·8 | 41·0 | 747·9 | 41·5 | H |
| | 14 | 0 | | 17·34 | 526·8 | 40·8 | 745·9 | 41·2 | H |
| | 15 | 0 | | 16·19 | 525·4 | 40·6 | 743·9 | 40·9 | H |
| | 16 | 0 | | 15·34 | 523·0 | 40·4 | 746·4 | 40·5 | H |
| | 17 | 0 | | 16·35 | 522·2 | 40·2 | 746·6 | 40·2 | H |
| | 18 | 0 | | 16·23 | 523·9 | 40·0 | 746·9 | 39·8 | H |
| | 19 | 0 | | 16·16 | 525·3 | 39·8 | 746·4 | 39·4 | W |
| | 20 | 0 | | 16·15 | 523·5 | 39·5 | 747·4 | 39·0 | W |
| | 21 | 0 | | 16·87 | 523·3 | 39·2 | 744·6 | 38·7 | B |
| | 22 | 0 | | 15·83 | 517·7 | 39·0 | 747·4 | 38·5 | W |
| | 23 | 0 | | 17·87 | 517·1 | 38·9 | 735·4 | 38·4 | W |
| 15 | 0 | 0 | | 20·74 | 517·4 | 38·7 | 739·4 | 38·4 | W |
| | 1 | 0 | | 22·42 | 516·1 | 38·7 | 750·3 | 38·4 | W |
| | 2 | 0 | | 24·10 | 520·0 | 38·6 | 748·6 | 38·4 | W |
| | 3 | 0 | | 21·32 | 521·2 | 38·5 | 751·5 | 38·5 | W |
| | 4 | 0 | | 20·23 | 522·8 | 38·5 | 755·5 | 38·6 | W |
| | 5 | 0 | | 18·84 | 523·3 | 38·5 | 758·7 | 38·5 | W |
| | 6 | 0 | | 18·10 | 524·0 | 38·4 | 757·6 | 38·3 | H |
| | 7 | 0 | | 18·16 | 523·1 | 38·3 | 752·6 | 38·0 | H |
| | 8 | 0 | | 17·83 | 525·0 | 38·1 | 753·4 | 37·8 | H |
| | 9 | 0 | | 17·61 | 526·3 | 37·9 | 752·4 | 37·6 | H |
| | 10 | 0 | | 17·63 | 525·4 | 37·8 | 754·4 | 37·4 | H |
| | 11 | 0 | | 17·46 | 525·6 | 37·8 | 754·8 | 37·3 | B |
| | 12 | 0 | | 17·09 | 526·2 | 37 6 | 751·2 | 37·2 | B |
| | 13 | 0 | 25 | 18·00 | 526·2 | 37·3 | 752·1 | 37·0 | B |
| | 14 | 0 | | 18·07 | 524·2 | 37·1 | 753·6 | 36·8 | B |
| | 15 | 0 | | 17·47 | 523·3 | 37·0 | 754·4 | 36·6 | B |
| | 16 | 0 | | 17·46 | 524·0 | 36·9 | 753·5 | 36·5 | B |
| | 17 | 0 | | 17·19 | 523·9 | 36·8 | 751·9 | 36·3 | B |
| | 18 | 0 | | 17·34 | 523·1 | 36·6 | 751·2 | 36·1 | B |
| | 19 | 0 | | 16·95 | 523·8 | 36·4 | 752·0 | 35·9 | H |
| | 20 | 0 | | 16·23 | 521·9 | 36·2 | 756·6 | 35·7 | H |

DECLINATION. Magnet untouched, Feb. 23d—March 22d.

BIFILAR. Observed 2m after the Declination, $k=0{\cdot}000140$. BALANCE. Observed 3m after the Declination, $k=0{\cdot}0000085$.

† Extra Observations made.

| Göttingen Mean Time of Declination Obs. | | | Declination. | Bifilar. | | Balance. | | Observer's Initial. |
|---|---|---|---|---|---|---|---|---|
| | | | | Corrected. | Thermometer. | Corrected. | Thermometer. | |
| d. | h. | m. | ° ′ | Sc. Div. | ° | Mic. Div. | ° | |
| 15 | 21 | 0 | 25 15·17 | 518·2 | 36·0 | 763·3 | 35·6 | W |
| | 22 | 0 | 15·49 | 513·9 | 35·9 | 765·6 | 35·6 | H |
| | 23 | 0 | 17·17 | 512·0 | 35·9 | 760·6 | 36·5 | H |
| 16 | 0 | 0 | 21·73 | 515·6 | 36·2 | 754·7 | 37·5 | H |
| | 1 | 0 | 22·40 | 515·8 | 36·6 | 752·4 | 38·2 | H |
| | 2 | 0 | 24·39 | 519·5 | 37·1 | 750·7 | 38·6 | H |
| | 3 | 0 | 23·11 | 517·5 | 37·5 | 754·4 | 38·9 | H |
| | 4 | 0 | 20·18 | 519·4 | 37·9 | 761·4 | 39·0 | H |
| | 5 | 0 | 18·90 | 522·5 | 38·0 | 762·9 | 39·0 | H |
| | 6 | 0 | 17·51 | 522·9 | 38·0 | 757·9 | 38·5 | B |
| | 7 | 0 | 17·12 | 525·8 | 37·9 | 753·4 | 38·1 | B |
| | 8 | 0 | 17·26 | 526·1 | 37·8 | 749·8 | 37·7 | B |
| | 9 | 0 | 16·79 | 524·8 | 37·5 | 755·4 | 37·4 | B |
| | 10 | 0 | 17·02 | 523·2 | 37·2 | 754·7 | 37·0 | B |
| | 11 | 0 | 16·82 | 523·8 | 37·0 | 754·8 | 36·7 | W |
| | 12 | 0 | 17·27 | 523·6 | 36·8 | 753·6 | 36·4 | W |
| 17 | 13 | 0 | 25 16·82 | 525·5 | 38·6 | 742·9 | 37·5 | W |
| | 14 | 0 | 16·93 | 524·8 | 38·0 | 743·2 | 36·7 | W |
| | 15 | 0 | 16·79 | 524·7 | 37·4 | 741·1 | 35·8 | W |
| | 16 | 0 | 16·77 | 522·5 | 36·9 | 735·0 | 35·1 | W |
| | 17 | 0† | 19·34 | 519·1 | 36·3 | 734·2 | 34·3 | W |
| | 18 | 0 | 15·91 | 524·4 | 35·7 | 723·0 | 33·6 | W |
| | 19 | 0 | 16·72 | 524·5 | 35·1 | 723·4 | 33·0 | H |
| | 20 | 0 | 15·04 | 522·7 | 34·5 | 733·5 | 32·4 | H |
| | 21 | 0 | 13·69 | 519·0 | 33·9 | 739·3 | 31·9 | B |
| | 22 | 0 | 14·17 | 514·6 | 33·5 | 738·9 | 31·9 | H |
| | 23 | 0 | 17·94 | 508·8 | 33·3 | 744·9 | 32·3 | H |
| 18 | 0 | 0 | 21·90 | 511·1 | 33·2 | 733·5 | 33·3 | H |
| | 1 | 0 | 24·42 | 511·8 | 33·4 | 718·9 | 34·2 | H |
| | 2 | 0 | 26·65 | 521·3 | 33·9 | 722·1 | 35·2 | H |
| | 3 | 0 | 25·40 | 522·7 | 34·6 | 733·2 | 36·6 | H |
| | 4 | 0 | 23·38 | 526·6 | 35·5 | 737·1 | 37·6 | H |
| | 5 | 0 | 21·34 | 529·7 | 36·3 | 741·7 | 38·4 | H |
| | 6 | 0 | 20·53 | 531·0 | 37·0 | 750·1 | 38·9 | W |
| | 7 | 0 | 19·51 | 527·2 | 37·6 | 748·6 | 39·1 | W |
| | 8 | 0 | 19·42 | 529·5 | 37·9 | 750·2 | 39·2 | W |
| | 9 | 0† | 11·22 | 519·7 | 37·9 | 767·2 | 39·3 | W |
| | 10 | 0† | 12·93 | 523·3 | 38·0 | 759·1 | 39·4 | W |
| | 11 | 0† | 09·59 | 518·3 | 38·2 | 740·8 | 39·6 | B |
| | 12 | 0† | 13·44 | 524·7 | 38·4 | 738·6 | 39·8 | B |
| | 13 | 0 | 25 15·98 | 512·9 | 38·6 | 735·5 | 39·6 | B |
| | 14 | 0 | 17·56 | 524·0 | 38·6 | 735·1 | 39·4 | B |
| | 15 | 0 | 15·56 | 524·2 | 38·4 | 734·8 | 39·1 | B |
| | 16 | 0 | 16·32 | 525·3 | 38·2 | 727·8 | 38·9 | B |
| | 17 | 0† | 11·41 | 520·9 | 38·1 | 724·9 | 38·6 | B |
| | 18 | 0† | 14·06 | 528·9 | 38·0 | 720·1 | 38·5 | B |
| | 19 | 0 | 14·80 | 523·0 | 38·0 | 721·4 | 38·3 | W |
| | 20 | 0 | 16·89 | 521·8 | 37·9 | 719·0 | 38·1 | W |
| | 21 | 0 | 15·05 | 516·1 | 37·8 | 729·5 | 38·2 | H |
| | 22 | 0† | 16·36 | 497·1 | 37·7 | 732·7 | 38·4 | W |
| | 23 | 0† | 26·94 | 491·6 | 37·9 | 729·3 | 39·4 | W |
| 19 | 0 | 0† | 20·11 | 513·4 | 38·4 | 719·9 | 40·6 | H |
| | 1 | 0 | 22·13 | 513·4 | 39·2 | 722·8 | 42·0 | H |
| | 2 | 0 | 24·30 | 516·6 | 40·1 | 731·4 | 43·2 | W |
| | 3 | 0 | 22·94 | 518·4 | 41·0 | 739·4 | 44·4 | W |
| | 4 | 0 | 21·73 | 521·7 | 41·9 | 744·2 | 44·9 | W |
| 19 | 5 | 0 | 25 21·12 | 527·4 | 42·6 | 753·0 | 45·2 | W |
| | 6 | 0 | 18·84 | 523·8 | 43·0 | 754·3 | 45·3 | B |
| | 7 | 0 | 17·06 | 525·7 | 43·1 | 754·9 | 45·2 | B |
| | 8 | 0† | 10·09 | 518·4 | 43·2 | 770·4 | 45·0 | B |
| | 9 | 0† | 17·15 | 542·7 | 43·2 | 734·0 | 44·8 | B |
| | 10 | 0† | 15·32 | 521·7 | 43·3 | 745·6 | 44·8 | B |
| | 11 | 0 | 15·56 | 525·7 | 43·2 | 740·8 | 44·6 | H |
| | 12 | 0 | 16·95 | 524·9 | 43·1 | 742·0 | 44·5 | H |
| | 13 | 0 | 25 15·76 | 522·3 | 43·0 | 746·6 | 44·3 | H |
| | 14 | 0 | 17·71 | 522·6 | 43·0 | 744·6 | 44·1 | H |
| | 15 | 0 | 16·82 | 522·8 | 43·0 | 741·7 | 44·0 | H |
| | 16 | 0 | 16·82 | 520·6 | 43·0 | 742·6 | 44·0 | H |
| | 17 | 0† | 19·93 | 517·2 | 43·0 | 735·9 | 43·9 | H |
| | 18 | 0 | 17·02 | 517·8 | 43·0 | 720·1 | 43·8 | H |
| | 19 | 25 | 17·84 | 525·4 | 43·1 | 709·8 | 43·7 | B |
| | 20 | 0 | 17·17 | 525·8 | 43·0 | 712·4 | 43·6 | B |
| | 21 | 0 | 16·12 | 519·8 | 42·9 | 722·7 | 43·5 | W |
| | 22 | 0 | 17·33 | 519·7 | 42·9 | 723·3 | 43·3 | B |
| | 23 | 0 | 17·09 | 513·8 | 42·8 | 723·6 | 43·1 | W |
| 20 | 0 | 0 | 19·34 | 514·3 | 42·8 | 726·8 | 43·1 | B |
| | 1 | 0 | 21·59 | 512·9 | 42·7 | 718·3 | 43·0 | B |
| | 2 | 0 | 22·91 | 517·4 | 42·6 | 719·3 | 42·8 | W |
| | 3 | 0 | 21·79 | 521·9 | 42·5 | 726·6 | 42·9 | B |
| | 4 | 0 | 20·02 | 524·2 | 42·5 | 734·7 | 43·0 | W |
| | 5 | 0 | 18·84 | 527·9 | 42·6 | 745·0 | 43·1 | B |
| | 6 | 0 | 17·46 | 526·1 | 42·7 | 746·2 | 43·1 | W |
| | 7 | 0 | 16·98 | 526·8 | 42·7 | 743·9 | 42·9 | H |
| | 8 | 0 | 17·15 | 528·8 | 42·5 | 742·3 | 42·5 | H |
| | 9 | 0 | 16·75 | 525·7 | 42·3 | 745·1 | 42·0 | H |
| | 10 | 0 | 13·70 | 523·0 | 42·0 | 744·8 | 41·5 | B |
| | 11 | 0 | 14·41 | 528·6 | 41·8 | 728·2 | 41·3 | B |
| | 12 | 0 | 13·59 | 525·6 | 41·5 | 718·8 | 41·1 | B |
| | 13 | 0 | 25 18·05 | 525·9 | 41·3 | 720·9 | 40·8 | D |
| | 14 | 0 | 16·75 | 522·0 | 41·0 | 724·3 | 40·5 | D |
| | 15 | 0 | 16·32 | 521·9 | 40·7 | 724·2 | 40·2 | D |
| | 16 | 0 | 16·30 | 523·5 | 40·4 | 720·8 | 39·8 | D |
| | 17 | 0 | 16·18 | 523·2 | 40·1 | 725·3 | 39·4 | W |
| | 18 | 0 | 17·58 | 521·8 | 39·8 | 722·3 | 38·9 | W |
| | 19 | 0 | 17·44 | 524·0 | 39·4 | 717·8 | 38·3 | W |
| | 20 | 0 | 15·51 | 520·4 | 39·0 | 722·4 | 37·7 | W |
| | 21 | 0 | 14·46 | 515·1 | 38·6 | 726·2 | 37·4 | B |
| | 22 | 0 | 16·99 | 512·0 | 38·1 | 724·7 | 37·3 | B |
| | 23 | 0 | 19·10 | 515·0 | 38·0 | 719·8 | 37·9 | W |
| 21 | 0 | 0 | 21·73 | 514·3 | 38·0 | 724·5 | 38·6 | B |
| | 1 | 0 | 23·24 | 515·7 | 38·3 | 727·1 | 39·9 | B |
| | 2 | 0 | 23·25 | 521·1 | 39·1 | 727·2 | 41·3 | H |
| | 3 | 0 | 22·17 | 523·4 | 40·0 | 730·6 | 42·7 | H |
| | 4 | 0 | 21·56 | 528·1 | 40·9 | 728·3 | 43·7 | H |
| | 5 | 0 | 19·78 | 525·9 | 41·7 | 740·9 | 44·1 | B |
| | 6 | 0 | 18·01 | 525·1 | 42·1 | 758·1 | 44·3 | B |
| | 7 | 0 | 16·97 | 525·2 | 42·4 | 756·3 | 44·4 | D |
| | 8 | 0 | 17·63 | 527·7 | 42·6 | 744·6 | 44·5 | D |
| | 9 | 0 | 17·47 | 529·0 | 42·9 | 745·2 | 44·6 | W |
| | 10 | 0 | 16·80 | 525·7 | 42·9 | 747·8 | 44·4 | W |
| | 11 | 0 | 14·77 | 522·9 | 42·9 | 717·5 | 44·0 | W |
| | 12 | 0 | 15·62 | 526·1 | 42·8 | 723·4 | 43·6 | B |

DECLINATION. Magnet untouched, Feb. 23d—March 22d.

BIFILAR. Observed 2m after the Declination, $k=0{\cdot}000140$. BALANCE. Observed 3m after the Declination, $k=0{\cdot}0000085$.

† Extra Observations made.

| Göttingen Mean Time of Declination Obs. | | | Declination. | Bifilar. Corrected. | Bifilar. Thermometer. | Balance. Corrected. | Balance. Thermometer. | Observer's Initial. |
|---|---|---|---|---|---|---|---|---|
| d. | h. | m. | ° ′ | Sc Div. | ° | Mic. Div. | ° | |
| 21 | 13 | 0 | 25 17·40 | 524·4 | 42·6 | 732·2 | 43·3 | B |
| | 14 | 0 | 17·04 | 524·4 | 42·3 | 736·4 | 43·0 | B |
| | 15 | 0 | 16·82 | 523·9 | 42·0 | 737·3 | 42·6 | B |
| | 16 | 0 | 17·26 | 524·5 | 41·9 | 736·6 | 42·3 | B |
| | 17 | 0 | 17·42 | 524·3 | 41·9 | 738·4 | 42·1 | B |
| | 18 | 0 | 15·98 | 526·0 | 41·7 | 737·1 | 41·9 | B |
| | 19 | 0 | 15·54 | 527·1 | 41·5 | 737·4 | 41·7 | W |
| | 20 | 0 | 15·42 | 521·1 | 41·2 | 742·2 | 41·5 | W |
| | 21 | 0 | 15·41 | 518·6 | 41·1 | 741·2 | 41·6 | H |
| | 22 | 0 | 17·68 | 516·5 | 41·1 | 742·5 | 41·8 | W |
| | 23 | 0 | 20·08 | 514·6 | 41·2 | 742·3 | 42·4 | W |
| 22 | 0 | 0 | 22·18 | 508·8 | 41·5 | 744·4 | 42·9 | W |
| | 1 | 0 | 23·52 | 513·9 | 41·8 | 740·7 | 43·2 | H |
| | 2 | 0 | 24·87 | 519·3 | 42·1 | 737·9 | 43·5 | W |
| | 3 | 0 | 24·52 | 526·6 | 42·5 | 741·2 | 44·0 | W |
| | 4 | 0 | 22·03 | 522·3 | 42·9 | 747·0 | 44·5 | H |
| | 5 | 0 | 20·32 | 525·4 | 43·3 | 746·3 | 45·0 | W |
| | 6 | 0 | 19·04 | 526·7 | 43·8 | 740·9 | 45·4 | B |
| | 7 | 0 | 18·77 | 528·4 | 44·1 | 737·8 | 45·6 | B |
| | 8 | 0 | 18·25 | 530·0 | 44·3 | 737·7 | 45·6 | B |
| | 9 | 0† | 15·56 | 523·9 | 44·6 | 735·5 | 45·6 | B |
| | 10 | 0† | 16·01 | 520·2 | 44·7 | 750·8 | 45·6 | B |
| | 11 | 0 | 12·83 | 526·2 | 44·6 | 734·3 | 45·5 | H |
| | 12 | 0 | 16·79 | 525·3 | 44·6 | 738·0 | 45·4 | H |
| | 13 | 0 | 25 16·73 | 525·7 | 44·6 | 734·6 | 45·2 | H |
| | 14 | 0 | 16·75 | 524·9 | 44·3 | 735·3 | 44·9 | H |
| | 15 | 0 | 16·15 | 523·3 | 44·0 | 738·3 | 44·6 | H |
| | 16 | 0 | 17·40 | 522·9 | 43·9 | 739·1 | 44·2 | H |
| | 17 | 0 | 17·37 | 523·6 | 43·7 | 734·7 | 43·9 | H |
| | 18 | 0 | 16·89 | 524·0 | 43·5 | 732·8 | 43·5 | H |
| | 19 | 0 | 16·08 | 525·5 | 43·3 | 736·0 | 43·2 | B |
| | 20 | 0 | 15·02 | 524·6 | 43·1 | 739·3 | 43·0 | B |
| | 21 | 0 | 14·80 | 520·1 | 42·9 | 741·5 | 42·8 | W |
| | 22 | 0 | 15·74 | 515·0 | 42·8 | 743·7 | 42·6 | B |
| | 23 | 0 | 18·14 | 512·6 | 42·7 | 736·4 | 43·0 | W |
| 23 | 0 | 0 | 23·85? | 507·5 | 42·7 | 734·1 | 43·5 | W |
| | 1 | 0 | 23·17 | 511·6 | 42·9 | 731·8 | 43·9 | B |
| | 2 | 0 | 24·33 | 515·0 | 43·1 | 735·1 | 44·5 | W |
| | 3 | 0 | 23·15 | 519·4 | 43·5 | 739·9 | 45·0 | W |
| | 4 | 0 | 22·27 | 522·1 | 43·9 | 751·0 | 45·4 | W |
| | 5 | 0 | 19·62 | 521·7 | 44·3 | 754·6 | 45·7 | W |
| | 6 | 0 | 18·16 | 526·8 | 44·7 | 752·5 | 46·0 | H |
| | 7 | 0 | 18·03 | 530·7 | 44·9 | 743·8 | 46·1 | H |
| | 8 | 0 | 17·71 | 527·8 | 44·9 | 738·8 | 45·8 | H |
| | 9 | 0 | 17·20 | 528·7 | 44·9 | 735·9 | 45·5 | H |
| | 10 | 0 | 17·07 | 526·9 | 44·9 | 734·3 | 45·3 | H |
| | 11 | 0 | 16·84 | 527·3 | 44·8 | 736·7 | 45·0 | W |
| | 12 | 0 | 16·68 | 525·0 | 44·6 | 739·1 | 44·7 | W |
| 24 | 13 | 0 | 25 16·79 | 524·3 | 43·3 | 730·6 | 42·9 | B |
| | 14 | 0 | 16·35 | 524·6 | 43·1 | 733·0 | 42·6 | B |
| | 15 | 0 | 16·93 | 523·8 | 42·9 | 736·4 | 42·3 | B |
| | 16 | 0 | 16·86 | 524·0 | 42·6 | 737·3 | 42·0 | B |
| | 17 | 0 | 16·36 | 523·6 | 42·3 | 739·6 | 41·7 | B |
| | 18 | 0 | 16·75 | 523·8 | 42·1 | 739·5 | 41·6 | B |
| | 19 | 0 | 16·82 | 524·3 | 42·0 | 738·7 | 41·6 | H |
| | 20 | 0 | 15·44 | 525·5 | 41·8 | 738·6 | 41·5 | H |

| Göttingen Mean Time of Declination Obs. | | | Declination. | Bifilar. Corrected. | Bifilar. Thermometer. | Balance. Corrected. | Balance. Thermometer. | Observer's Initial. |
|---|---|---|---|---|---|---|---|---|
| d. | h. | m. | ° ′ | Sc. Div. | ° | Mic. Div. | ° | |
| 24 | 21 | 4 | 25 14·17 | 520·7 | 41·7 | 739·2 | 41·4 | W |
| | 22 | 0 | 15·47 | 515·0 | 41·6 | 735·9 | 41·5 | H |
| | 23 | 0 | 17·96 | 515·2 | 41·5 | 730·3 | 41·6 | H |
| 25 | 0 | 0 | 20·05 | 512·5 | 41·5 | 729·1 | 41·9 | H |
| | 1 | 0 | 21·91 | 517·1 | 41·7 | 724·5 | 42·3 | H |
| | 2 | 0 | 23·34 | 522·8 | 41·9 | 725·5 | 42·8 | H |
| | 3 | 0 | 24·08 | 530·6 | 42·1 | 730·8 | 43·2 | H |
| | 4 | 0 | 22·82 | 531·0 | 42·4 | 742·1 | 43·6 | H |
| | 5 | 0 | 18·90 | 526·2 | 42·7 | 750·2 | 44·0 | H |
| | 6 | 0 | 19·04 | 524·4 | 43·0 | 752·7 | 44·2 | B |
| | 7 | 0 | 18·74 | 530·9 | 43·2 | 756·5 | 44·3 | B |
| | 8 | 0 | 18·82 | 523·2 | 43·5 | 755·5 | 44·3 | B |
| | 9 | 0 | 16·73 | 525·0 | 43·6 | 754·7 | 44·3 | B |
| | 10 | 0 | 17·89 | 525·5 | 43·6 | 747·4 | 44·2 | B |
| | 11 | 0 | 17·02 | 525·9 | 43·6 | 743·0 | 44·2 | W |
| | 12 | 0 | 17·15 | 526·4 | 43·5 | 737·7 | 44·0 | W |
| | 13 | 0 | 25 17·47 | 526·2 | 43·5 | 736·4 | 44·0 | W |
| | 14 | 4 | 15·61 | 527·1 | 43·5 | 726·8 | 44·0 | W |
| | 15 | 0 | 15·98 | 524·9 | 43·4 | 731·4 | 44·0 | W |
| | 16 | 0 | 16·05 | 523·5 | 43·3 | 733·6 | 43·7 | W |
| | 17 | 0 | 16·18 | 525·5 | 43·1 | 731·2 | 43·4 | W |
| | 18 | 0 | 16·12 | 525·3 | 43·0 | 732·1 | 43·1 | W |
| | 19 | 0 | 16·08 | 524·4 | 42·9 | 736·3 | 42·8 | B |
| | 20 | 5 | 14·87 | 523·0 | 42·7 | 741·3 | 42·5 | B |
| | 21 | 5 | 14·43 | 519·0 | 42·5 | 749·9 | 42·4 | H |
| | 22 | 0 | 15·71 | 516·3 | 42·4 | 738·4 | 42·6 | B |
| | 23 | 0 | 18·77 | 512·3 | 42·4 | 735·7 | 43·5 | H |
| 26 | 0 | 0 | 21·53 | 511·9 | 42·8 | 728·8 | 44·4 | H |
| | 1 | 0 | 22·87 | 515·8 | 43·3 | 721·4 | 45·4 | H |
| | 2 | 0 | 22·87 | 524·2 | 44·1 | 722·6 | 46·6 | H |
| | 3 | 0 | 21·63 | 527·8 | 45·1 | 725·0 | 47·7 | B |
| | 4 | 0 | 19·49 | 526·8 | 46·1 | 727·5 | 48·9 | B |
| | 5 | 0 | 18·14 | 528·1 | 46·9 | 743·8 | 49·6 | B |
| | 6 | 0 | 17·58 | 528·1 | 47·8 | 748·2 | 50·0 | W |
| | 7 | 0 | 17·76 | 527·9 | 48·0 | 744·5 | 50·0 | W |
| | 8 | 0 | 18·20 | 528·2 | 48·2 | 739·5 | 49·8 | W |
| | 9 | 0 | 18·10 | 528·5 | 48·3 | 737·6 | 49·6 | W |
| | 10 | 0 | 18·16 | 529·3 | 48·3 | 736·0 | 49·5 | W |
| | 11 | 0 | 18·16 | 530·7 | 48·2 | 733·0 | 49·4 | H |
| | 12 | 0 | 17·49 | 530·0 | 48·1 | 734·2 | 49·2 | H |
| | 13 | 0 | 25 14·40 | 528·6 | 48·0 | 733·2 | 49·1 | H |
| | 14 | 0 | 15·91 | 527·7 | 48·0 | 734·4 | 49·0 | H |
| | 15 | 0 | 16·57 | 527·1 | 48·0 | 733·8 | 48·9 | H |
| | 16 | 0 | 16·15 | 526·8 | 48·0 | 735·0 | 48·8 | H |
| | 17 | 0 | 15·64 | 526·9 | 47·9 | 734·3 | 48·7 | H |
| | 18 | 0 | 16·13 | 525·7 | 47·9 | 736·6 | 48·6 | H |
| | 19 | 0 | 15·64 | 525·5 | 47·9 | 739·7 | 48·5 | W |
| | 20 | 0 | 14·60 | 523·8 | 47·9 | 743·7 | 48·5 | W |
| | 21 | 0 | 13·64 | 521·7 | 47·9 | 743·7 | 48·5 | B |
| | 22 | 0 | 14·73 | 518·5 | 47·9 | 737·9 | 48·7 | W |
| | 23 | 0 | 16·16 | 515·6 | 48·0 | 727·4 | 49·0 | W |
| 27 | 0 | 0 | 18·55 | 517·6 | 48·3 | 719·6 | 49·5 | W |
| | 1 | 0 | 20·92 | 519·3 | 48·9 | 715·9 | 50·5 | W |
| | 2 | 0 | 21·59 | 523·8 | 49·6 | 712·1 | 51·5 | W |
| | 3 | 0 | 21·71 | 531·9 | 50·3 | 726·7 | 52·5 | W |
| | 4 | 0 | 20·42 | 527·5 | 51·0 | 742·8 | 53·7 | W |

DECLINATION. Torsion removed,—March $22^d\ 23^h$, 0°—$27^d\ 4^h$, + 3°, + 9½°* Effect of + 10° of Torsion = − 0′·84.
BIFILAR. Observed $2^m$ after the Declination, $k$=0·000140. BALANCE. Observed $3^m$ after the Declination, $k$=0 0000085.

† Extra Observations made.
March $23^d\ 0^h$—$4^h$. Magnet with short scale used in the declinometer.
March $25^d\ 6^h$—$10^h$. The magnets seemed to be very slightly disturbed.
* March $27^d\ 4^h$+. After removing the torsion from the declinometer thread, the thread, which it was found had stretched a little, was wound up 0·2 inch, and the torsion again removed.

| Göttingen Mean Time of Declination Obs. | | | Declination. | Bifilar. | | Balance. | | Observer's Initial. |
|---|---|---|---|---|---|---|---|---|
| | | | | Corrected. | Thermometer. | Corrected. | Thermometer. | |
| d. | h. | m. | ° ′ | Sc. Div. | ° | Mic. Div. | ° | |
| 27 | 5 | 0 | 25 19·84 | 525·1 | 51·9 | 741·1 | 54·5 | W |
| | 6 | 0 | 16·16 | 529·2 | 52·3 | 756·7 | 54·6 | H |
| | 7 | 0 | 14·71 | 524·4 | 52·7 | 793·7 | 54·5 | H |
| | 8 | 0 | 19·56 | 527·4 | 52·8 | 772·4 | 54·2 | H |
| | 9 | 0 | 19·56 | 527·5 | 52·8 | 768·4 | 53·8 | H |
| | 10 | 0 | 17·42 | 522·7 | 52·6 | 775·6 | 53·0 | W |
| | 11 | 0 | 18·10 | 526·0 | 52·2 | 762·8 | 52·3 | B |
| | 12 | 0 | 16·89 | 525·2 | 51·8 | 754·1 | 51·6 | B |
| | 13 | 0† | 25 10·70 | 539·4 | 51·4 | 684·0 | 50·8 | B |
| | 14 | 0† | 12·98 | 518·5 | 51·0 | 689·9 | 50·2 | B |
| | 15 | 0 | 14·70 | 519·3 | 50·5 | 720·2 | 49·5 | B |
| | 16 | 0 | 15·44 | 519·0 | 50·0 | 736·7 | 48·9 | B |
| | 17 | 0 | 15·44 | 520·4 | 49·5 | 738·9 | 48·1 | B |
| | 18 | 0 | 15·85 | 519·1 | 49·0 | 736·1 | 47·3 | B |
| | 19 | 0 | 16·63 | 518·7 | 48·5 | 735·6 | 46·6 | H |
| | 20 | 0 | 15·85 | 515·5 | 47·9 | 737·7 | 45·9 | H |
| | 21 | 0 | 17·10 | 514·8 | 47·3 | 739·2 | 45·5 | W |
| | 22 | 0 | 18·84 | 511·9 | 46·9 | 741·7 | 45·4 | H |
| | 23 | 0 | 21·93 | 509·6 | 46·7 | 730·6 | 46·0 | H |
| 28 | 0 | 0 | 24·93 | 510·9 | 46·6 | 732·1 | 46·7 | H |
| | 1 | 0 | 25·56 | 509·7 | 46·9 | 737·7 | 48·0 | H |
| | 2 | 0 | 25·63 | 523·8 | 47·5 | 739·7 | 49·3 | H |
| | 3 | 0 | 24·86 | 516·0 | 48·2 | 749·7 | 50·3 | H |
| | 4 | 0 | 21·03 | 527·7 | 49·1 | 748·7 | 51·5 | H |
| | 5 | 0 | 20·29 | 534·7 | 50·0 | 740·0 | 52·5 | H |
| | 6 | 0 | 19·51 | 536·3 | 50·9 | 743·3 | 53·0 | B |
| | 7 | 0 | 16·35 | 526·6 | 51·6 | 764·1 | 53·0 | B |
| | 8 | 0† | 15·51 | 524·5 | 51·8 | 773·5 | 52·5 | B |
| | 9 | 0† | 18·08 | 530·9 | 51·7 | 764·0 | 52·0 | B |
| | 10 | 0 | 18·11 | 528·1 | 51·3 | 753·4 | 51·4 | B |
| | 11 | 0 | 18·16 | 528·0 | 50·9 | 751·1 | 50·6 | W |
| | 12 | 0 | 18·23 | 526·4 | 50·4 | 747·1 | 50·0 | W |
| | 13 | 0 | 25 18·10 | 526·6 | 50·0 | 746·3 | 49·5 | W |
| | 14 | 0 | 18·05 | 525·0 | 49·6 | 747·2 | 48·9 | W |
| | 15 | 0 | 17·06 | 525·0 | 49·2 | 748·0 | 48·5 | W |
| | 16 | 0 | 16·38 | 524·4 | 48·9 | 747·6 | 48·2 | W |
| | 17 | 0 | 16·35 | 527·1 | 48·6 | 746·6 | 48·0 | W |
| | 18 | 0 | 16·33 | 523·5 | 48·3 | 748·4 | 47·7 | W |
| | 19 | 0 | 16·21 | 523·6 | 48·1 | 742·2 | 47·5 | B |
| | 20 | 0 | 15·88 | 518·6 | 48·0 | 739·6 | 47·3 | B |
| | 21 | 0 | 17·87 | 508·2 | 47·9 | 737·7 | 47·5 | H |
| | 22 | 0 | 18·60 | 501·7 | 47·9 | 737·4 | 47·9 | B |
| | 23 | 0 | 25·81 | 504·5 | 47·9 | 741·2 | 48·6 | H |
| 29 | 0 | 0 | 22·15 | 516·2 | 48·2 | 731·9 | 49·3 | B |
| | 1 | 0 | 22·85 | 514·0 | 48·8 | 733·0 | 50·6 | H |
| | 2 | 0 | 23·92 | 510·4 | 49·8 | 728·9 | 52·2 | B |
| | 3 | 0 | 24·22 | 523·3 | 50·8 | 727·9 | 53·5 | B |
| | 4 | 0 | 22·51 | 516·2 | 51·8 | 732·2 | 54·8 | H |
| | 5 | 0 | 20·30 | 521·3 | 52·8 | 733·7 | 55·6 | W |
| | 6 | 0 | 19·17 | 527·0 | 53·7 | 745·1 | 56·3 | W |
| | 7 | 0 | 19·07 | 528·3 | 54·3 | 742·7 | 56·5 | W |
| | 8 | 0† | 18·21 | 540·6 | 54·8 | 739·0 | 56·4 | W |
| | 9 | 0† | 17·46 | 533·2 | 54·9 | 748·9 | 56·1 | W |
| | 10 | 0† | 25 26·23 | 457·6 | 54·8 | 679·1 | 55·5 | W |
| | 11 | 0† | 24 52·13 | 476·7 | 54·4 | 652·8 | 55·1 | H |
| | 12 | 0† | 25 00·53 | 475·0 | 54·0 | 619·0 | 54·5 | H |

| Göttingen Mean Time of Declination Obs. | | | Declination. | Bifilar. | | Balance. | | Observer's Initial. |
|---|---|---|---|---|---|---|---|---|
| | | | | Corrected. | Thermometer. | Corrected. | Thermometer. | |
| d. | h. | m. | ° ′ | Sc. Div. | ° | Mic. Div. | ° | |
| 29 | 13 | 0† | 24 53·27 | 489·7 | 53·7 | 379·4 | 54·0 | B |
| | 14 | 0† | 25 07·40 | 387·6 | 53·2 | 397·7 | 53·0 | B |
| | 15 | 0† | 18·38 | 414·1 | 52·8 | 308·3 | 52·4 | H |
| | 16 | 0† | 03·50 | 506·5 | 52·3 | 379·4 | 51·5 | B |
| | 17 | 0† | 10·77 | 515·8 | 51·8 | 552·3 | 50·5 | H |
| | 18 | 0† | 12·46 | 427·5 | 51·3 | 397·7 | 49·6 | H |
| | 19 | 0† | 21·88 | 504·6 | 50·7 | 418·5 | 48·7 | W |
| | 20 | 0† | 22·42 | 498·1 | 49·9 | 575·0 | 47·8 | W |
| | 21 | 0† | 22·78 | 490·5 | 49·3 | 646·8 | 47·2 | W |
| | 22 | 0† | 28·55 | 488·7 | 48·8 | 671·8 | 47·0 | W |
| | 23 | 0† | 26·63 | 493·9 | 48·3 | 702·5 | 47·0 | W |
| 30 | 0 | 0† | 28·82 | 500·7 | 48·1 | 808·4 | 47·7 | W |
| | 1 | 0† | 30·69 | 503·9 | 48·3 | 799·1 | 49·0 | W |
| | 2 | 0† | 25·51 | 520·7 | 48·9 | 857·8 | 50·5 | W |
| | 3 | 0† | 28·18 | 514·3 | 49·9 | 809·1 | 52·5 | W |
| | 4 | 0† | 16·97 | 531·7 | 51·0 | 825·7 | 54·0 | W |
| | 5 | 0† | 25 24·66 | 517·9 | 52·3 | 756·8 | 55·5 | W |
| | 6 | 0† | 24 51·16 | 530·1 | 53·3 | 748·3 | 56·4 | H |
| | 7 | 0† | 25 02·55 | 523·0 | 54·2 | 813·2 | 56·9 | H |
| | 8 | 0† | 29·93 | 545·6 | 54·9 | 723·8 | 56·8 | H |
| | 9 | 0† | 05·13 | 532·9 | 55·0 | 660·1 | 57·0 | H |
| | 10 | 0† | 12·82 | 507·5 | 55·1 | 664·2 | 56·7 | B |
| | 11 | 0† | 20·16 | 518·3 | 55·0 | 576·0 | 56·5 | W |
| | 12 | 0† | 14·87 | 520·8 | 54·9 | 651·6 | 55·8 | B |
| 31 | 13 | 0† | 25 21·88 | 514·6 | 52·2 | 609·9 | 51·5 | W |
| | 14 | 0† | 17·98 | 515·9 | 51·9 | 684·3 | 51·0 | W |
| | 15 | 0 | 16·75 | 516·1 | 51·4 | 719·4 | 50·5 | W |
| | 16 | 0 | 16·26 | 514·7 | 50·9 | 724·4 | 49·7 | W |
| | 17 | 0 | 17·54 | 514·5 | 50·4 | 716·8 | 49·0 | W |
| | 18 | 0† | 22·87 | 503·3 | 49·9 | 675·1 | 48·0 | W |
| | 19 | 0† | 19·55 | 524·5 | 49·3 | 666·4 | 47·3 | B |
| | 20 | 0† | 17·10 | 514·6 | 48·7 | 706·3 | 46·6 | B |
| | 21 | 0 | 15·74 | 509·5 | 48·1 | 729·3 | 46·2 | H |
| | 22 | 0 | 17·42 | 505·5 | 47·7 | 744·8 | 46·1 | B |
| | 23 | 0 | 19·04 | 508·9 | 47·4 | 743·4 | 46·6 | H |
| 1 | 0 | 0 | 22·17 | 495·6 | 47·5 | 755·9 | 47·7 | B |
| | 1 | 0 | 22·06 | 509·6 | 47·9 | 755·3 | 49·3 | H |
| | 2 | 0 | 24·28 | 517·3 | 48·9 | 762·7 | 50·9 | B |
| | 3 | 0 | 17·81 | 511·5 | 49·9 | 788·0 | 52·5 | B |
| | 4 | 0† | 21·81 | 516·8 | 51·0 | 785·4 | 54·0 | B |
| | 5 | 0† | 15·04 | 516·1 | 52·0 | 780·3 | 54·8 | B |
| | 6 | 0† | 12·87 | 529·6 | 52·9 | 810·9 | 55·4 | W |
| | 7 | 0† | 16·35 | 520·9 | 53·4 | 805·9 | 55·4 | W |
| | 8 | 0† | 19·19 | 526·2 | 53·7 | 781·5 | 55·0 | W |
| | 9 | 0† | 12·92 | 514·1 | 53·8 | 782·0 | 54·8 | W |
| | 10 | 0† | 19·55 | 501·0 | 53·6 | 692·9 | 54·5 | W |
| | 11 | 0† | 12·67 | 516·0 | 53·3 | 710·7 | 54·2 | H |
| | 12 | 0† | 15·76 | 514·6 | 53·0 | 710·6 | 53·5 | H |
| | 13 | 0 | 25 18·84 | 520·4 | 52·7 | 671·9 | 52·9 | H |
| | 14 | 0 | 17·20 | 516·2 | 52·4 | 673·0 | 52·2 | H |
| | 15 | 0† | 21·50 | 507·5 | 52·1 | 594·9 | 51·5 | H |
| | 16 | 0† | 13·46 | 516·5 | 51·8 | 649·9 | 51·2 | H |
| | 17 | 0 | 16·39 | 514·5 | 51·4 | 663·7 | 50·8 | H |
| | 18 | 0 | 16·46 | 519·8 | 51·1 | 653·4 | 50·5 | H |
| | 19 | 0 | 16·55 | 519·6 | 50·9 | 666·9 | 50·0 | W |
| | 20 | 0 | 18·23 | 508·8 | 50·6 | 697·9 | 49·8 | W |

DECLINATION. Magnet untouched, March 27d—April 5d.

BIFILAR. Observed 2m after the Declination, $k$=0·000140. BALANCE. Observed 3m after the Declination, $k$=0·0000085.

† Extra Observations made.

March 27d 5h. The declination was not observed till 5h 5m.

March 29d 14h. The reading of the declination has been interpolated between observations made at 13h 59m and 14h 2m. The observation of the balance was taken at 14h 4m.

March 30d 2h. The reading of the bifilar taken at 2h 3m.

March 30h 9m. The reading of the declination taken at 8h 59m.

| Göttingen Mean Time of Declination Obs. | Declination. | Bifilar. | | Balance. | | Observer's Initial. |
|---|---|---|---|---|---|---|
| | | Corrected. | Thermometer. | Corrected. | Thermometer. | |
| d. h. m. | ° ′ | Sc. Div. | ° | Mic. Div. | ° | |
| 1 21 0 | 25 20·11 | 507·6 | 50·3 | 706·5 | 49·5 | B |
| 22 0† | 21·23 | 494·6 | 50·0 | 726·8 | 49·5 | W |
| 23 0 | 23·76 | 500·8 | 49·9 | 724·1 | 49·5 | W |
| 2 0 0 | 24·84 | 506·9 | 49·9 | 725·5 | 49·8 | B |
| 1 0 | 25·58 | 513·7 | 49·9 | 728·9 | 50·0 | W |
| 2 0 | 26·35 | 519·7 | 50·0 | 738·0 | 50·5 | W |
| 3 0 | 27·44 | 530·2 | 50·1 | 750·7 | 50·9 | W |
| 4 0 | 23·43 | 518·4 | 50·5 | 767·9 | 51·2 | W |
| 5 0 | 22·24 | 522·1 | 50·7 | 780·0 | 51·0 | W |
| 6 0† | 18·85 | 503·8 | 50·7 | 824·7 | 51·0 | H |
| 7 0† | 18·25 | 526·4 | 50·7 | 796·4 | 50·9 | H |
| 8 0† | 16·08 | 520·7 | 50·6 | 792·7 | 50·8 | H |
| 9 0† | 29·68 | 515·6 | 50·4 | 742·9 | 50·7 | H |
| 10 0† | 13·96 | 523·3 | 50·4 | 743·9 | 50·7 | H |
| 11 0† | 16·35 | 524·0 | 50·4 | 747·5 | 50·7 | B |
| 12 0 | 18·40 | 520·9 | 50·3 | 744·7 | 50·5 | B |
| 13 0 | 25 19·07 | 520·2 | 50·2 | 741·0 | 50·2 | B |
| 14 0 | 18·18 | 521·6 | 50·0 | 740·8 | 49·9 | B |
| 15 0 | 16·13 | 515·7 | 49·9 | 738·0 | 49·6 | B |
| 16 0† | 21·29 | 509·5 | 49·7 | 728·1 | 49·4 | B |
| 17 0† | 17·58 | 519·7 | 49·5 | 680·1 | 49·3 | B |
| 18 0† | 12·38 | 515·3 | 49·3 | 702·5 | 49·2 | B |
| 19 0 | 14·85 | 517·5 | 49·1 | 721·3 | 49·0 | H |
| 20 0 | 19·12 | 512·8 | 49·0 | 727·8 | 48·7 | H |
| 21 0† | 19·88 | 492·1 | 48·8 | 746·7 | 48·4 | W |
| 22 0† | 27·05 | 490·8 | 48·7 | 746·2 | 48·5 | H |
| 23 0† | 24·13 | 503·9 | 48·6 | 743·0 | 49·0 | H |
| 3 0 0 | 20·94 | 520·1 | 48·7 | 738·7 | 49·2 | H |
| 1 0 | 22·89 | 516·9 | 48·8 | 727·9 | 49·6 | H |
| 2 0 | 24·89 | 515·9 | 48·9 | 731·8 | 49·9 | H |
| 3 0 | 25·42 | 523·4 | 49·1 | 743·8 | 50·1 | H |
| 4 0 | 25·00 | 517·8 | 49·3 | 784·8 | 50·4 | H |
| 5 0† | 23·51 | 527·6 | 49·5 | 827·7 | 50·4 | H |
| 6 0† | 12·35 | 550·4 | 49·7 | 851·1 | 50·3 | B |
| 7 0† | 13·66 | 511·4 | 49·8 | 818·6 | 50·1 | B |
| 8 0† | 14·23 | 515·3 | 49·7 | 784·0 | 49·9 | B |
| 9 0† | 17·53 | 519·3 | 49·5 | 757·1 | 49·5 | B |
| 10 0 | 18·45 | 521·1 | 49·2 | 753·4 | 49·1 | B |
| 11 0 | 15·78 | 529·4 | 49·0 | 730·1 | 48·7 | W |
| 12 0† | 13·63 | 513·0 | 48·7 | 713·7 | 48·3 | W |
| 13 0 | 25 17·63 | 517·7 | 48·4 | 713·5 | 48·0 | W |
| 14 0 | 15·04 | 511·6 | 48·0 | 723·7 | 47·5 | W |
| 15 0 | 21·06 | 514·1 | 47·9 | 716·3 | 47·2 | W |
| 16 0† | 24·25 | 510·6 | 47·7 | 676·2 | 46·9 | W |
| 17 0† | 13·94 | 517·0 | 47·3 | 665·2 | 46·7 | W |
| 18 0 | 14·46 | 518·1 | 47·0 | 691·8 | 46·3 | W |
| 19 0 | 15·56 | 516·5 | 46·9 | 716·2 | 45·9 | B |
| 20 0 | 14·57 | 511·0 | 46·5 | 734·1 | 45·5 | B |
| 21 0 | 16·05 | 505·0 | 46·1 | 743·5 | 45·2 | H |
| 22 0 | 19·86 | 500·5 | 45·8 | 749·4 | 45·0 | H |
| 23 0 | 22·11 | 498·9 | 45·6 | 752·8 | 44·9 | H |
| 4 0 0 | 24·86 | 504·6 | 45·4 | 753·6 | 45·1 | H |
| 1 0 | 25·56 | 514·8 | 45·4 | 758·6 | 45·2 | H |
| 2 0 | 26·20 | 513·9 | 45·4 | 759·6 | 45·4 | H |
| 3 0 | 25·49 | 522·6 | 45·4 | 764·5 | 45·7 | W |
| 4 0 | 20·11 | 520·4 | 45·6 | 778·0 | 46·0 | B |
| 4 5 0 | 25 19·14 | 525·5 | 45·8 | 783·9 | 46·3 | W |
| 6 0 | 19·34 | 525·4 | 46·0 | 776·9 | 46·5 | W |
| 7 0† | 17·63 | 517·0 | 46·0 | 776·8 | 46·6 | W |
| 8 0 | 14·60 | 524·2 | 46·1 | 773·5 | 46·6 | W |
| 9 0 | 16·52 | 522·6 | 46·1 | 766·2 | 46·5 | W |
| 10 0 | 15·34 | 524·7 | 46·1 | 757·7 | 46·3 | W |
| 11 0 | 14·13 | 522·4 | 46·0 | 746·5 | 46·1 | H |
| 12 0 | 14·58 | 524·5 | 45·9 | 718·0 | 46·0 | H |
| 13 0 | 25 15·45 | 520·1 | 45·8 | 726·2 | 45·6 | H |
| 14 0 | 14·62 | 520·7 | 45·5 | 729·1 | 45·2 | H |
| 15 0 | 14·75 | 518·7 | 45·2 | 721·3 | 44·8 | H |
| 16 0 | 11·39 | 517·9 | 44·9 | 721·5 | 44·5 | H |
| 17 0 | 12·92 | 520·5 | 44·6 | 725·5 | 44·2 | H |
| 18 0 | 12·85 | 520·7 | 44·3 | 725·7 | 43·9 | H |
| 19 0 | 14·26 | 521·3 | 44·0 | 729·1 | 43·4 | W |
| 20 0 | 14·87 | 519·9 | 43·8 | 733·1 | 43·0 | W |
| 21 0 | 15·27 | 518·4 | 43·6 | 735·5 | 43·0 | B |
| 22 0 | 16·82 | 512·9 | 43·4 | 735·8 | 43·0 | W |
| 23 0 | 18·74 | 512·0 | 43·2 | 739·5 | 43·3 | W |
| 5 0 0 | 22·00 | 516·9 | 43·2 | 736·7 | 43·6 | W |
| 1 0 | 25·70 | 529·4 | 43·4 | 730·8 | 44·2 | B |
| 2 0 | 26·67 | 525·3 | 43·7 | 737·3 | 44·8 | W |
| 3 0 | 26·27 | 526·0 | 44·0 | 751·1 | 45·3 | W |
| 4 0 | 24·22 | 527·0 | 44·5 | 751·7 | 45·5 | W |
| 5 0 | 22·38 | 528·6 | 44·8 | 754·4 | 45·5 | W |
| 6 0 | 19·95 | 523·8 | 44·8 | 761·4 | 45·6 | H |
| 7 0 | 19·19 | 526·9 | 44·8 | 763·3 | 45·6 | H |
| 8 0 | 18·32 | 527·7 | 44·8 | 760·6 | 45·5 | H |
| 9 0 | 18·08 | 528·1 | 44·8 | 754·6 | 45·2 | H |
| 10 0 | 17·71 | 528·5 | 44·7 | 753·6 | 44·9 | H |
| 11 0 | 17·54 | 528·1 | 44·4 | 753·6 | 44·2 | B |
| 12 0† | 13·16 | 528·2 | 44·1 | 747·5 | 43·6 | B |
| 13 0† | 25 34·12 | 517·2 | 43·8 | 583·9 | 43·2 | B |
| 14 0† | 10·28 | 525·0 | 43·5 | 667·4 | 42·8 | B |
| 15 0† | 10·07 | 518·0 | 43·1 | 646·9 | 42·3 | B |
| 16 0† | 10·60 | 499·5 | 42·7 | 580·3 | 41·9 | B |
| 17 0† | 04·91 | 519·7 | 42·3 | 578·0 | 41·3 | B |
| 18 0† | 14·13 | 507·0 | 42·0 | 661·3 | 40·8 | B |
| 19 0 | 15·74 | 514·9 | 41·6 | 705·9 | 40·3 | H |
| 20 0 | 16·38 | 516·8 | 41·2 | 732·2 | 39·9 | H |
| 21 0 | 15·41 | 510·7 | 40·8 | 744·0 | 39·5 | W |
| 22 0 | 16·48 | 504·1 | 40·4 | 749·3 | 39·9 | H |
| 23 0 | 18·03 | 502·9 | 40·3 | 746·4 | 40·5 | H |
| 6 0 0 | 21·04 | 507·2 | 40·5 | 747·9 | 41·9 | H |
| 1 0 | 24·15 | 513·1 | 41·1 | 747·8 | 43·2 | H |
| 2 2 | 24·75 | 518·1 | 42·3 | 741·7 | 44·9 | H |
| 3 0 | 23·51 | 523·3 | 43·4 | 747·9 | 46·2 | H |
| 4 0 | 21·97 | 524·9 | 44·5 | 743·9 | 47·5 | H |
| 5 0 | 18·34 | 526·2 | 45·5 | 760·8 | 48·2 | H |
| 6 0 | 16·75 | 526·5 | 46·2 | 769·1 | 48·4 | B |
| 7 0 | 17·15 | 525·3 | 46·8 | 762·6 | 48·5 | B |
| 8 0 | 15·89 | 525·4 | 47·0 | 758·2 | 48·5 | B |
| 9 0 | 16·18 | 525·8 | 47·0 | 748·3 | 48·4 | B |
| 10 0† | 16·12 | 530·0 | 47·1 | 710·2 | 48·1 | B |
| 11 0 | 16·55 | 526·6 | 47·0 | 707·3 | 48·0 | W |
| 12 0 | 15·17 | 525·9 | 47·0 | 717·0 | 47·9 | W |

DECLINATION. Torsion removed,—April 5d 4h, $-3\frac{1}{2}°$. Effect of + 10° of Torsion = − 0′·84.
BIFILAR. Observed 2m after the Declination, $k$=0·000140. BALANCE. Observed 3m after the Declination, $k$=0·0000085.

† Extra Observations made.

| Göttingen Mean Time of Declination Obs. | Declination. | Bifilar. | | Balance. | | Observer's Initial. |
|---|---|---|---|---|---|---|
| | | Corrected. | Thermometer. | Corrected. | Thermometer. | |
| d. h. m. | ° ′ | Sc. Div. | ° | Mic. Div. | ° | |
| 7 13 0 | 25 16·68 | 521·9 | 52·3 | 727·7 | 52·5 | H |
| 14 0 | 16·18 | 519·5 | 51·9 | 735·0 | 52·0 | H |
| 15 0 | 17·93 | 519·4 | 51·5 | 739·7 | 51·5 | H |
| 16 0 | 17·27 | 520·3 | 51·2 | 740·8 | 50·9 | H |
| 17 0 | 16·82 | 520·5 | 50·8 | 747·5 | 50·3 | H |
| 18 0 | 16·18 | 521·8 | 50·4 | 750·7 | 49·8 | H |
| 19 0 | 16·92 | 518·2 | 50·1 | 758·2 | 49·5 | W |
| 20 0 | 16·65 | 519·6 | 49·9 | 760·5 | 49·3 | W |
| 21 0 | 15·71 | 514·1 | 49·7 | 759·5 | 49·1 | B |
| 22 0 | 16·63 | 511·0 | 49·6 | 764·3 | 49·5 | W |
| 23 0 | 19·34 | 508·9 | 49·6 | 753·9 | 49·9 | W |
| 8 0 0 | 22·22 | 511·4 | 49·8 | 742·9 | 50·4 | W |
| 1 0 | 24·97 | 516·3 | 50·0 | 739·0 | 51·1 | W |
| 2 0 | 25·19 | 517·9 | 50·6 | 743·5 | 52·1 | W |
| 3 0 | 22·53 | 516·7 | 51·2 | 743·0 | 53·1 | W |
| 4 0 | 20·77 | 519·2 | 51·9 | 742·5 | 54·0 | W |
| 5 0 | 19·88 | 522·6 | 52·7 | 742·3 | 54·9 | W |
| 6 0 | 18·90 | 525·3 | 53·3 | 740·3 | 55·5 | H |
| 7 0 | 18·16 | 531·4 | 53·9 | 737·3 | 55·6 | H |
| 8 0† | 13·46 | 525·9 | 54·0 | 744·7 | 55·2 | H |
| 9 0 | 15·07 | 526·0 | 54·0 | 751·1 | 55·2 | H |
| 10 0 | 13·59 | 524·0 | 53·9 | 749·0 | 55·0 | H |
| 11 0 | 16·28 | 522·2 | 53·9 | 744·7 | 54·5 | B |
| 12 0 | 15·85 | 522·5 | 53·7 | 735·6 | 54·0 | B |
| 13 0 | 25 16·28 | 521·0 | 53·4 | 731·7 | 53·5 | B |
| 14 0 | 21·68 | 523·8 | 53·1 | 714·7 | 53·0 | B |
| 15 0 | 16·12 | 522·2 | 52·9 | 724·3 | 52·8 | B |
| 16 0 | 15·34 | 521·6 | 52·7 | 732·0 | 52·5 | B |
| 17 0 | 14·58 | 524·2 | 52·4 | 734·5 | 52·2 | B |
| 18 0 | 15·01 | 522·1 | 52·2 | 736·1 | 52·0 | B |
| 19 0 | 15·38 | 521·4 | 52·0 | 737·4 | 51·9 | H |
| 20 0 | 14·51 | 521·9 | 51·9 | 739·5 | 51·9 | H |
| 21 0 | 14·23 | 518·2 | 51·9 | 742·8 | 51·8 | W |
| 22 0 | 15·74 | 516·6 | 51·8 | 741·6 | 51·9 | H |
| 23 2 | 17·29 | 513·1 | 51·9 | 739·7 | 52·4 | H |
| 9 0 0 | 19·71 | 512·4 | 52·0 | 731·2 | 53·0 | H |
| 1 0 | 22·87 | 514·1 | 52·3 | 721·8 | 53·9 | H |
| 2 0† | 24·10 | 518·1 | 52·9 | 725·7 | 54·9 | H |
| 3 0 | 22·87 | 518·3 | 53·6 | 731·1 | 55·7 | H |
| 4 0 | 21·46 | 518·7 | 54·3 | 728·8 | 56·5 | H |
| 5 0 | 20·69 | 523·2 | 55·0 | 726·4 | 57·0 | H |
| 6 0 | 19·37 | 529·4 | 55·4 | 729·0 | 57·0 | B |
| 7 0 | 19·32 | 535·7 | 55·8 | 730·5 | 57·0 | B |
| 8 0 | 18·70 | 537·6 | 55·8 | 729·7 | 56·8 | B |
| 9 0 | 18·38 | 533·3 | 55·8 | 734·5 | 56·5 | B |
| 10 0 | 16·62 | 531·0 | 55·6 | 739·7 | 56·1 | B |
| 11 0 | 16·66 | 529·8 | 55·4 | 740·6 | 55·7 | W |
| 12 0 | 16·15 | 527·1 | 55·0 | 735·9 | 55·4 | W |
| 13 0 | 25 16·62 | 528·6 | 54·9 | 730·6 | 55·0 | W |
| 14 0 | 17·22 | 528·4 | 54·7 | 730·4 | 54·7 | W |
| 15 0 | 16·92 | 525·6 | 54·4 | 733·3 | 54·4 | W |
| 16 0 | 15·72 | 525·5 | 54·0 | 733·6 | 54·0 | W |
| 17 0 | 15·31 | 525·7 | 53·8 | 735·1 | 53·3 | W |
| 18 0 | 15·44 | 525·1 | 53·5 | 736·6 | 52·5 | W |
| 19 0 | 14·13 | 524·4 | 53·0 | 743·3 | 52·0 | B |
| 20 0 | 13·36 | 521·7 | 52·6 | 747·8 | 51·5 | B |

| Göttingen Mean Time of Declination Obs. | Declination. | Bifilar. | | Balance. | | Observer's Initial. |
|---|---|---|---|---|---|---|
| | | Corrected. | Thermometer. | Corrected. | Thermometer. | |
| d. h. m. | ° ′ | Sc. Div. | ° | Mic. Div. | ° | |
| 9 21 0 | 25 15·15 | 517·1 | 52·2 | 743·6 | 51·3 | H |
| 22 0 | 17·49 | 509·3 | 51·9 | 733·4 | 51·2 | H |
| 23 0 | 23·01 | 508·4 | 51·8 | 730·7 | 51·5 | H |
| 10 0 0 | 24·96 | 511·7 | 51·9 | 722·6 | 52·5 | H |
| 1 0 | 27·68 | 518·9 | 52·2 | 727·5 | 53·5 | B |
| 2 0 | 28·11 | 522·5 | 52·8 | 731·4 | 54·6 | B |
| 3 0 | 26·30 | 519·1 | 53·4 | 744·3 | 55·8 | H |
| 4 0 | 22·67 | 535·6 | 54·2 | 739·8 | 57·0 | H |
| 5 0 | 19·91 | 528·3 | 55·2 | 734·7 | 57·8 | B |
| 6 0 | 18·81 | 533·9 | 56·0 | 728·3 | 58·1 | W |
| 7 0 | 18·30 | 531·6 | 56·5 | 734·1 | 58·1 | W |
| 8 0 | 17·91 | 531·1 | 56·7 | 737·1 | 57·5 | W |
| 9 0 | 18·08 | 529·5 | 56·4 | 738·2 | 56·5 | W |
| 10 0 | 17·65 | 530·1 | 56·0 | 734·8 | 55·6 | W |
| 11 0 | 17·71 | 529·7 | 55·3 | 733·9 | 54·5 | H |
| 12 0 | 17·36 | 528·3 | 54·6 | 729·5 | 53·6 | H |
| 13 0† | 25 08·63 | 526·9 | 54·0 | 703·2 | 52·5 | H |
| 14 0† | 14·73 | 520·3 | 53·4 | 726·9 | 52·0 | H |
| 15 0 | 15·32 | 522·9 | 52·8 | 731·8 | 51·3 | H |
| 16 0 | 16·19 | 521·1 | 52·3 | 730·0 | 50·3 | H |
| 17 0 | 15·42 | 523·9 | 51·8 | 729·9 | 49·9 | H |
| 18 0 | 16·23 | 525·5 | 51·3 | 732·8 | 49·2 | H |
| 19 0 | 15·44 | 522·2 | 50·9 | 741·5 | 49·0 | W |
| 20 0 | 15·59 | 520·7 | 50·5 | 742·2 | 48·7 | W |
| 21 0 | 16·33 | 514·0 | 50·1 | 746·4 | 48·6 | B |
| 22 0 | 17·74 | 512·3 | 49·9 | 747·7 | 48·6 | W |
| 23 0 | 19·01 | 514·7 | 49·8 | 747·7 | 49·0 | W |
| 11 0 0 | 21·04 | 517·3 | 49·8 | 742·5 | 49·5 | W |
| 1 0 | 23·79 | 518·4 | 49·9 | 745·1 | 50·0 | W |
| 2 0 | 24·45 | 524·0 | 50·2 | 749·2 | 50·8 | W |
| 3 0 | 22·17 | 520·8 | 50·6 | 750·7 | 51·5 | W |
| 4 0 | 20·55 | 523·5 | 51·2 | 751·2 | 52·5 | W |
| 5 0 | 18·84 | 524·1 | 51·8 | 747·6 | 53·4 | W |
| 6 0 | 18·14 | 527·6 | 52·4 | 747·5 | 54·0 | H |
| 7 0 | 17·60 | 527·3 | 52·9 | 744·5 | 54·1 | H |
| 8 0 | 17·53 | 527·3 | 53·0 | 741·1 | 53·9 | H |
| 9 0 | 17·76 | 528·3 | 53·0 | 739·1 | 53·2 | H |
| 10 0 | 17·26 | 525·9 | 52·8 | 740·5 | 52·5 | H |
| 11 0 | 17·07 | 526·2 | 52·4 | 739·1 | 51·7 | B |
| 12 0 | 17·91 | 525·1 | 51·9 | 735·7 | 50·9 | B |
| 13 0 | 25 17·94 | 525·0 | 51·4 | 735·5 | 50·2 | B |
| 14 0 | 17·80 | 523·4 | 50·9 | 734·1 | 49·5 | B |
| 15 0 | 16·89 | 524·5 | 50·5 | 734·8 | 49·0 | B |
| 16 0 | 16·08 | 523·8 | 50·0 | 739·1 | 48·3 | B |
| 17 0 | 19·24 | 519·5 | 49·5 | 742·0 | 47·7 | B |
| 18 0 | 18·75 | 526·9 | 49·1 | 731·2 | 47·3 | B |
| 19 0 | 16·82 | 527·8 | 48·6 | 735·6 | 46·9 | H |
| 20 0 | 16·45 | 525·7 | 48·2 | 739·9 | 46·9 | H |
| 21 0 | 14·94 | 521·3 | 48·0 | 744·5 | 47·0 | W |
| 22 0 | 15·69 | 519·0 | 47·9 | 750·0 | 47·4 | H |
| 23 0 | 18·23 | 516·2 | 47·9 | 748·7 | 48·0 | H |
| 12 0 0 | 21·53 | 517·5 | 48·0 | 742·2 | 48·3 | H |
| 1 0 | 24·22 | 516·5 | 48·2 | 732·7 | 48·9 | H |
| 2 0 | 24·62 | 520·1 | 48·2 | 735·9 | 48·9 | H |
| 3 0 | 24·08 | 522·3 | 48·4 | 742·2 | 48·9 | H |
| 4 0 | 22·17 | 521·6 | 48·4 | 749·5 | 49·0 | H |

DECLINATION. Magnet untouched, April 5d—May 28d.

BIFILAR. Observed 2m after the Declination, $k$=0·000140. BALANCE. Observed 3m after the Declination, $k$=0·0000085.

† Extra Observations made.

April 11d 18h. The magnets appear to be slightly disturbed.

| Göttingen Mean Time of Declination Obs. | | | Declination. | Bifilar. | | Balance. | | Observer's Initial. |
|---|---|---|---|---|---|---|---|---|
| | | | | Corrected. | Thermometer. | Corrected. | Thermometer. | |
| d. | h. | m. | ° ′ | Sc. Div. | ° | Mic. Div. | ° | |
| 12 | 5 | 0 | 25 20·05 | 522·2 | 48·4 | 751·5 | 49·0 | H |
| | 6 | 0 | 18·10 | 526·6 | 48·6 | 753·2 | 48·9 | B |
| | 7 | 0 | 17·02 | 531·2 | 48·7 | 753·3 | 48·9 | B |
| | 8 | 0 | 17·36 | 531·5 | 48·7 | 751·8 | 48·9 | B |
| | 9 | 0 | 17·49 | 530·1 | 48·7 | 751·8 | 48·8 | B |
| | 10 | 0 | 17·94 | 528·7 | 48·7 | 751·9 | 48·8 | B |
| | 11 | 5 | 17·49 | 528·7 | 48·6 | 750·4 | 48·5 | W |
| | 12 | 0 | 17·53 | 527·0 | 48·4 | 750·3 | 48·3 | W |
| | 13 | 0 | 25 17·63 | 526·8 | 48·2 | 750·0 | 48·1 | W |
| | 14 | 0 | 17·54 | 526·2 | 48·0 | 749·0 | 47·9 | W |
| | 15 | 0 | 17·86 | 526·5 | 47·9 | 748·5 | 47·7 | W |
| | 16 | 0 | 16·84 | 525·9 | 47·8 | 747·2 | 47·5 | W |
| | 17 | 0 | 16·63 | 525·1 | 47·7 | 747·0 | 47·3 | W |
| | 18 | 0 | 16·18 | 524·8 | 47·6 | 749·0 | 47·1 | W |
| | 19 | 0 | 15·54 | 523·9 | 47·4 | 753·7 | 47·0 | B |
| | 20 | 0 | 14·60 | 522·5 | 47·2 | 756·2 | 46·9 | B |
| | 21 | 0 | 14·67 | 519·1 | 47·1 | 756·5 | 47·2 | H |
| | 22 | 0 | 16·15 | 515·1 | 47·1 | 753·7 | 47·5 | B |
| | 23 | 0 | 18·84 | 514·7 | 47·3 | 751·1 | 48·3 | H |
| 13 | 0 | 0 | 21·70 | 513·2 | 47·8 | 741·4 | 49·2 | H |
| | 1 | 0 | 24·55 | 517·6 | 48·4 | 729·0 | 50·3 | H |
| | 2 | 0 | 25·09 | 521·6 | 49·1 | 729·7 | 51·3 | B |
| | 3 | 0 | 23·48 | 524·5 | 50·0 | 727·9 | 52·4 | H |
| | 4 | 0 | 21·09 | 526·5 | 50·8 | 726·1 | 53·1 | B |
| | 5 | 0 | 18·97 | 524·0 | 51·4 | 728·4 | 53·8 | B |
| | 6 | 0 | 18·11 | 528·0 | 52·0 | 731·5 | 54·0 | W |
| | 7 | 0 | 17·58 | 527·8 | 52·2 | 730·3 | 53·9 | W |
| | 8 | 0 | 17·76 | 529·6 | 52·2 | 732·2 | 53·5 | W |
| | 9 | 0 | 17·84 | 529·6 | 52·1 | 733·5 | 53·0 | W |
| | 10 | 0 | 17·65 | 528·4 | 52·0 | 736·4 | 52·6 | W |
| | 11 | 0 | 17·39 | 528·5 | 51·9 | 737·3 | 52·3 | H |
| | 12 | 0 | 17·80 | 526·6 | 51·5 | 734·9 | 51·9 | H |
| 14 | 13 | 0 | 25 15·88 | 533·9 | 51·8 | 721·9 | 51·8 | B |
| | 14 | 0 | 16·15 | 529·9 | 51·6 | 722·1 | 51·7 | B |
| | 15 | 0 | 16·01 | 529·9 | 51·4 | 718·2 | 51·5 | B |
| | 16 | 0 | 16·18 | 526·5 | 51·3 | 726·2 | 51·5 | B |
| | 17 | 0† | 18·28 | 526·0 | 51·2 | 716·8 | 51·5 | B |
| | 18 | 0 | 17·47 | 531·3 | 51·2 | 705·9 | 51·5 | B |
| | 19 | 0 | 15·64 | 524·6 | 51·1 | 711·7 | 51·4 | H |
| | 20 | 0 | 17·36 | 524·6 | 51·0 | 718·2 | 51·4 | H |
| | 21 | 0 | 15·27 | 517·8 | 51·1 | 731·9 | 51·5 | W |
| | 22 | 0 | 15·98 | 514·4 | 51·1 | 729·8 | 51·6 | H |
| | 23 | 0 | 17·93 | 514·0 | 51·2 | 724·5 | 52·1 | H |
| 15 | 0 | 0 | 20·23 | 515·4 | 51·4 | 709·3 | 52·5 | H |
| | 1 | 0 | 24·23 | 515·2 | 51·7 | 714·1 | 52·9 | H |
| | 2 | 0 | 26·60 | 515·5 | 52·0 | 720·7 | 53·3 | H |
| | 3 | 0 | 24·80 | 517·4 | 52·4 | 735·3 | 53·9 | H |
| | 4 | 0 | 23·76 | 517·8 | 52·8 | 736·5 | 54·3 | H |
| | 5 | 0 | 21·66 | 523·9 | 53·0 | 733·8 | 54·4 | H |
| | 6 | 0 | 20·11 | 528·4 | 53·1 | 735·1 | 54·4 | B |
| | 7 | 0 | 18·13 | 529·7 | 53·2 | 736·5 | 54·4 | B |
| | 8 | 0† | 14·70 | 529·1 | 53·3 | 745·0 | 54·1 | B |
| | 9 | 0† | 13·81 | 538·5 | 53·3 | 733·2 | 54·0 | B |
| | 10 | 0† | 15·47 | 517·4 | 53·2 | 733·8 | 53·8 | B |
| | 11 | 0 | 14·75 | 523·6 | 53·0 | 728·4 | 53·5 | W |
| | 12 | 0 | 14·26 | 524·4 | 52·8 | 720·5 | 52·8 | W |

| Göttingen Mean Time of Declination Obs. | | | Declination. | Bifilar. | | Balance. | | Observer's Initial. |
|---|---|---|---|---|---|---|---|---|
| | | | | Corrected. | Thermometer. | Corrected. | Thermometer. | |
| d. | h. | m. | ° ′ | Sc. Div. | ° | Mic. Div. | ° | |
| 15 | 13 | 0 | 25 14·31 | 522·4 | 52·6 | 719·5 | 52·2 | W |
| | 14 | 0 | 14·94 | 521·0 | 52·3 | 708·1 | 51·5 | W |
| | 15 | 0 | 14·87 | 522·0 | 51·8 | 720·0 | 50·7 | W |
| | 16 | 0 | 15·89 | 521·3 | 51·3 | 722·4 | 49·9 | W |
| | 17 | 0 | 16·46 | 520·3 | 50·8 | 718·5 | 49·1 | W |
| | 18 | 0 | 15·41 | 521·0 | 50·2 | 724·5 | 48·3 | W |
| | 19 | 0 | 16·15 | 517·3 | 49·7 | 731·6 | 47·5 | B |
| | 20 | 0 | 15·17 | 517·3 | 49·1 | 726·2 | 47·1 | B |
| | 21 | 0 | 16·13 | 515·9 | 48·6 | 706·4 | 47·2 | H |
| | 22 | 0 | 16·39 | 514·4 | 48·3 | 717·4 | 47·4 | B |
| | 23 | 0 | 17·74 | 514·5 | 48·2 | 732·3 | 48·2 | H |
| 16 | 0 | 0 | 20·11 | 517·2 | 48·3 | 725·1 | 49·2 | H |
| | 1 | 0 | 21·30 | 517·6 | 49·0 | 706·4 | 50·3 | B |
| | 2 | 0 | 22·13 | 520·2 | 49·8 | 728·4 | 51·6 | B |
| | 3 | 0 | 22·92 | 525·5 | 50·5 | 731·0 | 52·6 | H |
| | 4 | 0 | 22·08 | 527·7 | 51·3 | 723·4 | 53·5 | B |
| | 5 | 0 | 20·97 | 524·0 | 51·9 | 744·1 | 53·8 | B |
| | 6 | 0 | 20·49 | 527·2 | 52·2 | 755·9 | 53·6 | W |
| | 7 | 0 | 18·34 | 528·5 | 52·3 | 751·9 | 53·3 | W |
| | 8 | 0 | 17·58 | 527·8 | 52·2 | 745·3 | 52·8 | W |
| | 9 | 0 | 17·53 | 525·8 | 52·0 | 740·8 | 52·4 | W |
| | 10 | 0 | 17·04 | 525·0 | 51·7 | 737·4 | 52·0 | W |
| | 11 | 0 | 17·31 | 526·7 | 51·4 | 732·9 | 51·5 | H |
| | 12 | 0 | 14·84 | 524·5 | 51·1 | 732·1 | 51·0 | H |
| | 13 | 0† | 25 10·20 | 516·9 | 50·9 | 725·5 | 50·6 | H |
| | 14 | 0† | 12·65 | 522·3 | 50·7 | 653·0 | 50·5 | H |
| | 15 | 0† | 06·54 | 517·5 | 50·5 | 635·1 | 50·4 | H |
| | 16 | 0† | 07·08 | 522·8 | 50·3 | 659·3 | 50·3 | H |
| | 17 | 0† | 12·11 | 524·8 | 50·2 | 670·7 | 50·2 | H |
| | 18 | 0† | 22·22 | 549·2 | 50·1 | 554·5 | 50·1 | H |
| | 19 | 0† | 28·35 | 520·9 | 50·0 | 599·8 | 49·9 | W |
| | 20 | 0† | 27·58 | 490·5 | 49·9 | 643·7 | 49·6 | W |
| | 21 | 0† | 28·80 | 462·2 | 49·8 | 688·0 | 49·5 | W |
| | 22 | 0† | 27·55 | 457·9 | 49·7 | 707·7 | 49·8 | W |
| | 23 | 0† | 29·73 | 472·0 | 49·8 | 754·9 | 50·1 | W |
| 17 | 0 | 0† | 27·29 | 480·6 | 49·9 | 837·7 | 50·8 | W |
| | 1 | 0† | 43·00 | 559·8 | 50·3 | 1082·9 | 51·8 | W |
| | 2 | 0† | 25·56 | 546·3 | 50·9 | 948·3 | 52·8 | W |
| | 3 | 0† | 26·72 | 562·8 | 51·7 | 945·2 | 54·0 | B |
| | 4 | 0† | 27·61 | 577·5 | 52·6 | 1016·0 | 55·3 | B |
| | 5 | 0† | 26·16 | 565·0 | 53·4 | 915·6 | 56·2 | W |
| | 6 | 0† | 19·93 | 593·2 | 54·2 | 931·8 | 56·5 | W |
| | 7 | 0† | 20·06 | 539·8 | 54·7 | 940·7 | 56·7 | H |
| | 8 | 0† | 18·10 | 526·7 | 54·9 | 929·9 | 56·3 | H |
| | 9 | 0† | 15·65 | 523·7 | 54·8 | 847·1 | 56·0 | H |
| | 10 | 0† | 07·91 | 515·7 | 54·7 | 797·1 | 55·7 | H |
| | 11 | 0† | 04·61 | 530·0 | 54·6 | 727·3 | 55·4 | H |
| | 12 | 0† | 10·38 | 504·1 | 54·3 | 749·8 | 55·0 | B |
| | 13 | 0† | 25 15·41 | 486·1 | 54·0 | 681·0 | 54·5 | B |
| | 14 | 0† | 08·77 | 525·7 | 53·8 | 676·4 | 54·2 | B |
| | 15 | 0 | 17·00 | 513·3 | 53·6 | 746·5 | 53·9 | B |
| | 16 | 0 | 16·10 | 512·8 | 53·3 | 755·4 | 53·3 | B |
| | 17 | 0 | 17·07 | 515·3 | 53·0 | 760·1 | 52·7 | B |
| | 18 | 0 | 16·84 | 511·7 | 52·7 | 764·5 | 52·2 | B |
| | 19 | 0 | 16·32 | 513·1 | 52·3 | 759·5 | 51·7 | H |
| | 20 | 0 | 16·06 | 511·3 | 52·0 | 760·0 | 51·4 | H |

DECLINATION. Magnet untouched, April 5d—May 28d.

BIFILAR. Observed 2m after the Declination, $k$=0·000140. BALANCE. Observed 3m after the Declination, $k$=0·0000085.

† Extra Observations made.

| Göttingen Mean Time of Declination Obs. | | | Declination. | Bifilar. | | Balance. | | Observer's Initial. | Göttingen Mean Time of Declination Obs. | | | Declination. | Bifilar. | | Balance. | | Observer's Initial. |
|---|---|---|---|---|---|---|---|---|---|---|---|---|---|---|---|---|---|
| | | | | Corrected. | Thermometer. | Corrected. | Thermometer. | | | | | | Corrected. | Thermometer. | Corrected. | Thermometer. | |
| d. | h. | m. | ° ′ | Sc. Div. | ° | Mic. Div. | ° | | d. | h. | m. | ° ′ | Sc. Div. | ° | Mic. Div. | ° | |
| 17 | 21 | 0 | 25 15·45 | 510·3 | 51·8 | 751·2 | 51·1 | W | 20 | 5 | 0 | 25 20·38 | 523·6 | 57·2 | 757·9 | 58·5 | W |
| | 22 | 0 | 18·41 | 514·8 | 51·6 | 727·2 | 51·1 | H | | 6 | 0 | 17·76 | 524·9 | 57·3 | 751·5 | 58·4 | H |
| | 23 | 0 | 18·77 | 515·7 | 51·4 | 714·2 | 51·2 | H | | 7 | 0 | 18·16 | 528·1 | 57·3 | 744·9 | 58·2 | H |
| 18 | 0 | 0 | 21·88 | 510·1 | 51·2 | 724·0 | 51·4 | W | | 8 | 0 | 17·39 | 526·7 | 57·2 | 744·8 | 58·0 | H |
| | 1 | 0 | 24·08 | 518·0 | 51·3 | 727·3 | 51·8 | W | | 9 | 0 | 17·24 | 527·7 | 57·0 | 742·9 | 57·4 | H |
| | 2 | 0 | 25·02 | 511·9 | 51·6 | 741·1 | 52·6 | W | | 10 | 0 | 17·56 | 528·4 | 57·0 | 738·3 | 56·9 | H |
| | 3 | 0 | 25·13 | 522·9 | 52·0 | 735·6 | 53·5 | W | | 11 | 0 | 17·04 | 526·0 | 56·6 | 740·9 | 56·3 | B |
| | 4 | 0 | 22·74 | 518·2 | 52·5 | 742·0 | 54·2 | W | | 12 | 0 | 17·89 | 525·2 | 56·2 | 743·4 | 56·0 | B |
| | 5 | 0 | 20·80 | 521·6 | 53·0 | 746·0 | 54·9 | W | | | | | | | | | |
| | 6 | 0 | 20·18 | 537·9 | 53·8 | 743·1 | 55·5 | B | 21 | 13 | 0 | 25 16·84 | 525·9 | 51·7 | 735·8 | 50·9 | W |
| | 7 | 0 | 21·50 | 529·6 | 54·2 | 734·0 | 55·7 | B | | 14 | 0 | 15·74 | 526·6 | 51·4 | 735·8 | 50·5 | W |
| | 8 | 0 | 19·53 | 533·8 | 54·5 | 748·6 | 55·5 | B | | 15 | 0 | 17·36 | 526·2 | 51·1 | 735·7 | 50·2 | W |
| | 9 | 0 | 17·12 | 531·0 | 54·5 | 751·4 | 55·0 | B | | 16 | 0 | 14·57 | 522·2 | 50·8 | 735·3 | 49·9 | W |
| | 10 | 0† | 14·92 | 526·1 | 54·2 | 746·2 | 54·5 | B | | 17 | 0 | 16·68 | 523·7 | 50·5 | 738·2 | 49·5 | W |
| | 11 | 0† | 12·73 | 528·6 | 53·9 | 719·9 | 54·0 | W | | 18 | 0 | 16·84 | 526·2 | 50·2 | 731·2 | 49·2 | W |
| | 12 | 0 | 12·55 | 517·2 | 53·6 | 706·9 | 53·5 | W | | 19 | 0 | 16·92 | 525·1 | 50·0 | 737·4 | 49·0 | B |
| | | | | | | | | | | 20 | 0 | 14·80 | 523·6 | 49·8 | 745·4 | 48·9 | B |
| | 13 | 0 | 25 15·83 | 516·5 | 53·3 | 725·7 | 53·0 | W | | 21 | 0 | 13·02 | 517·2 | 49·6 | 758·3 | 49·0 | B |
| | 14 | 0 | 17·56 | 517·7 | 53·0 | 728·9 | 52·5 | W | | 22 | 0 | 13·69 | 512·9 | 49·4 | 748·3 | 49·2 | B |
| | 15 | 0 | 16·38 | 520·2 | 52·7 | 739·4 | 52·0 | W | | 23 | 0 | 17·46 | 509·9 | 49·4 | 739·1 | 49·5 | B |
| | 16 | 0 | 16·99 | 518·7 | 52·4 | 747·9 | 51·6 | W | 22 | 0 | 0 | 20·87 | 511·5 | 49·6 | 737·6 | 50·1 | B |
| | 17 | 0 | 17·19 | 518·2 | 52·1 | 748·5 | 51·2 | W | | 1 | 0 | 23·19 | 515·7 | 49·9 | 723·6 | 50·7 | B |
| | 18 | 0 | 17·02 | 519·3 | 51·8 | 749·7 | 50·8 | W | | 2 | 0 | 23·48 | 522·2 | 50·3 | 733·1 | 51·4 | B |
| | 19 | 0 | 16·38 | 519·6 | 51·5 | 752·5 | 50·5 | B | | 3 | 0 | 23·56 | 527·7 | 50·7 | 740·9 | 51·9 | W |
| | 20 | 0 | 15·07 | 518·2 | 51·2 | 757·6 | 50·2 | B | | 4 | 0 | 22·20 | 529·2 | 51·2 | 744·3 | 52·5 | W |
| | 21 | 0 | 14·77 | 515·6 | 50·9 | 757·1 | 50·2 | H | | 5 | 0 | 20·96 | 535·0 | 51·8 | 743·2 | 53·0 | W |
| | 22 | 0 | 15·45 | 509·9 | 50·9 | 756·8 | 50·2 | B | | 6 | 0 | 20·06 | 534·5 | 52·4 | 754·3 | 53·6 | W |
| | 23 | 0 | 18·11 | 507·1 | 50·9 | 755·3 | 50·5 | H | | 7 | 0 | 19·17 | 528·0 | 52·9 | 753·4 | 54·0 | W |
| 19 | 0 | 0 | 20·79 | 504·8 | 50·9 | 749·5 | 51·0 | B | | 8 | 0 | 18·27 | 533·7 | 53·2 | 745·3 | 54·0 | W |
| | 1 | 0 | 22·82 | 511·0 | 51·2 | 748·1 | 52·1 | H | | 9 | 0 | 18·10 | 532·6 | 53·3 | 739·2 | 53·7 | W |
| | 2 | 0 | 23·58 | 515·7 | 51·8 | 750·3 | 53·2 | B | | 10 | 0 | 18·20 | 530·8 | 53·1 | 734·4 | 53·3 | W |
| | 3 | 0 | 22·55 | 516·6 | 52·5 | 754·9 | 54·5 | B | | 11 | 0 | 18·05 | 530·8 | 52·9 | 731·5 | 52·8 | D |
| | 4 | 0 | 21·27 | 528·6 | 53·2 | 751·5 | 55·5 | B | | 12 | 0 | 17·70 | 530·5 | 52·6 | 727·6 | 52·3 | D |
| | 5 | 0 | 19·61 | 522·0 | 54·0 | 745·9 | 56·3 | B | | | | | | | | | |
| | 6 | 0 | 18·34 | 521·7 | 54·9 | 753·4 | 56·5 | W | | 13 | 0 | 25 17·70 | 529·6 | 52·3 | 731·3 | 51·9 | D |
| | 7 | 0 | 18·37 | 527·1 | 55·0 | 755·5 | 56·5 | W | | 14 | 0 | 16·82 | 529·4 | 51·9 | 729·7 | 51·4 | D |
| | 8 | 0 | 18·20 | 529·3 | 55·1 | 758·5 | 56·3 | W | | 15 | 0 | 17·58 | 527·8 | 51·6 | 727·2 | 50·9 | D |
| | 9 | 0 | 18·08 | 527·5 | 55·1 | 753·2 | 56·0 | W | | 16 | 0 | 16·97 | 526·1 | 51·2 | 738·1 | 50·4 | D |
| | 10 | 0 | 17·89 | 525·4 | 55·0 | 750·2 | 55·7 | W | | 17 | 0 | 16·60 | 527·1 | 50·8 | 735·7 | 50·0 | D |
| | 11 | 0 | 15·15 | 532·8 | 55·0 | 737·4 | 55·5 | H | | 18 | 0 | 15·39 | 527·6 | 50·5 | 751·9 | 49·7 | D |
| | 12 | 0 | 18·14 | 525·0 | 54·9 | 735·8 | 55·4 | H | | 19 | 0 | 14·40 | 525·7 | 50·1 | 768·0 | 49·3 | W |
| | | | | | | | | | | 20 | 0 | 12·75 | 523·5 | 49·9 | 733·5 | 49·1 | W |
| | 13 | 0 | 25 17·39 | 523·5 | 54·8 | 739·2 | 55·2 | H | | 21 | 0 | 12·46 | 520·0 | 49·7 | 763·7 | 49·2 | B |
| | 14 | 0 | 18·14 | 524·3 | 54·6 | 739·8 | 55·1 | H | | 22 | 0 | 13·32 | 516·2 | 49·6 | 775·4 | 49·4 | W |
| | 15 | 0 | 17·02 | 520·8 | 54·4 | 746·3 | 55·0 | H | | 23 | 0 | 16·97 | 513·4 | 49·7 | 734·8 | 49·9 | W |
| | 16 | 0 | 16·68 | 521·4 | 54·3 | 745·0 | 54·8 | H | 23 | 0 | 0 | 20·85 | 512·3 | 49·9 | 724·8 | 50·4 | B |
| | 17 | 0 | 15·96 | 520·8 | 54·2 | 743·0 | 54·5 | H | | 1 | 0 | 23·72 | 517·6 | 50·2 | 711·8 | 51·0 | W |
| | 18 | 0 | 15·44 | 520·7 | 54·0 | 745·0 | 54·2 | H | | 2 | 0 | 22·04 | 517·7 | 50·7 | 729·6 | 51·7 | W |
| | 19 | 0 | 15·44 | 520·6 | 53·9 | 749·1 | 54·0 | W | | 3 | 0 | 22·03 | 522·0 | 51·2 | 749·7 | 52·5 | W |
| | 20 | 0 | 14·64 | 516·6 | 53·8 | 750·5 | 53·9 | W | | 4 | 0 | 22·35 | 533·2 | 51·9 | 747·3 | 53·3 | W |
| | 21 | 0 | 15·98 | 510·9 | 53·8 | 750·1 | 54·0 | B | | 5 | 0 | 22·42 | 529·0 | 52·6 | 754·6 | 54·0 | W |
| | 22 | 0 | 17·10 | 507·5 | 53·8 | 743·3 | 54·0 | W | | 6 | 0 | 20·40 | 537·1 | 53·0 | 747·0 | 54·2 | W |
| | 23 | 0 | 19·44 | 504·0 | 53·9 | 746·8 | 55·1 | W | | 7 | 0 | 19·24 | 534·3 | 53·2 | 748·5 | 54·1 | W |
| 20 | 0 | 0 | 23·21 | 508·3 | 54·4 | 747·5 | 56·2 | W | | 8 | 0 | 19·51 | 535·0 | 53·2 | 746·5 | 53·8 | W |
| | 1 | 0 | 25·14 | 510·4 | 55·0 | 744·1 | 57·2 | W | | 9 | 0 | 18·25 | 536·2 | 53·1 | 720·7 | 53·5 | W |
| | 2 | 0 | 24·75 | 512·0 | 55·9 | 736·8 | 58·0 | W | | 10 | 0 | 17·96 | 534·7 | 53·0 | 734·2 | 53·2 | W |
| | 3 | 0 | 24·13 | 514·2 | 56·6 | 743·5 | 58·5 | W | | 11 | 0 | 17·63 | 534·9 | 52·8 | 727·5 | 52·8 | B |
| | 4 | 0 | 21·17 | 521·5 | 57·0 | 753·8 | 58·5 | W | | 12 | 0 | 16·99 | 532·8 | 52·6 | 726·0 | 52·5 | B |

DECLINATION. Magnet untouched, April 5d—May 28d.

BIFILAR. Observed 2m after the Declination, $k=0{\cdot}000140$. BALANCE. Observed 3m after the Declination, $k=0{\cdot}0000085$.

† Extra Observations made.
April 18d 6h—8h. The magnets evidently unsteady.
April 19d 0h. The magnets unsteady.

| Göttingen Mean Time of Declination Obs. | Declination. | Bifilar. Corrected. | Bifilar. Thermometer. | Balance. Corrected. | Balance. Thermometer. | Observer's Initial. |
|---|---|---|---|---|---|---|
| d. h. m. | ° ′ | Sc. Div. | ° | Mic. Div. | ° | |
| 23 13 0 | 25 16·82 | 530·5 | 52·3 | 725·6 | 52·2 | B |
| 14 0 | 16·99 | 528·0 | 52·0 | 728·9 | 52·0 | B |
| 15 0 | 16·99 | 528·0 | 51·8 | 729·2 | 51·7 | B |
| 16 0 | 18·50 | 525·9 | 51·6 | 727·3 | 51·1 | B |
| 17 0 | 15·52 | 526·0 | 51·2 | 726·2 | 50·5 | B |
| 18 0 | 15·72 | 525·1 | 50·8 | 726·8 | 49·9 | B |
| 19 0 | 14·20 | 524·6 | 50·4 | 731·8 | 49·5 | W |
| 20 0 | 13·56 | 523·2 | 50·0 | 733·3 | 49·3 | W |
| 21 0 | 13·79 | 521·5 | 49·8 | 734·3 | 49·2 | W |
| 22 0 | 14·67 | 517·7 | 49·7 | 740·4 | 49·4 | W |
| 23 0 | 16·92 | 512·2 | 49·6 | 734·9 | 49·6 | W |
| 24 0 0 | 19·68 | 514·2 | 49·7 | 729·6 | 50·1 | W |
| 1 0 | 23·39 | 519·5 | 50·0 | 714·1 | 50·8 | W |
| 2 0 | 24·53 | 522·5 | 50·5 | 709·3 | 51·5 | W |
| 3 0 | 23·66 | 529·4 | 51·0 | 717·7 | 52·3 | W |
| 4 0 | 22·31 | 533·3 | 51·7 | 723·8 | 53·0 | W |
| 5 0 | 20·40 | 529·8 | 52·3 | 727·1 | 53·6 | W |
| 6 0 | 19·82 | 538·0 | 52·9 | 726·8 | 54·2 | B |
| 7 0 | 18·97 | 532·0 | 53·4 | 731·4 | 54·5 | B |
| 8 0 | 18·23 | 535·5 | 53·8 | 730·5 | 54·5 | B |
| 9 0 | 16·75 | 532·6 | 53·8 | 731·4 | 53·9 | B |
| 10 0 | 17·78 | 530·3 | 53·5 | 731·2 | 53·3 | B |
| 11 0 | 17·36 | 530·1 | 53·0 | 722·7 | 53·0 | B |
| 12 0 | 16·15 | 528·9 | 52·8 | 720·3 | 52·7 | B |
| 13 0 | 25 15·11 | 530·6 | 52·5 | 702·7 | 52·3 | D |
| 14 0 | 16·10 | 527·4 | 52·2 | 707·1 | 51·9 | D |
| 15 0 | 16·82 | 526·1 | 51·9 | 710·2 | 51·5 | D |
| 16 0 | 16·13 | 525·4 | 51·6 | 710·8 | 51·1 | D |
| 17 0 | 17·63 | 521·1 | 51·3 | 714·1 | 50·9 | D |
| 18 0 | 14·87 | 525·4 | 51·0 | 721·9 | 50·6 | W |
| 19 0 | 15·34 | 528·8 | 50·8 | 720·9 | 50·2 | W |
| 20 0 | 12·40 | 526·1 | 50·6 | 730·3 | 50·0 | W |
| 21 0 | 12·55 | 523·5 | 50·4 | 728·0 | 50·0 | H |
| 22 0 | 12·82 | 520·2 | 50·3 | 721·1 | 50·4 | H |
| 23 0 | 16·90 | 511·7 | 50·3 | 725·6 | 51·0 | H |
| 25 0 0 | 21·24 | 511·9 | 50·7 | 718·5 | 51·9 | H |
| 1 0 | 24·89 | 524·3 | 51·2 | 713·6 | 52·8 | B |
| 2 0 | 28·90 | 514·6 | 51·8 | 732·9 | 53·9 | B |
| 3 0 | 31·25 | 525·4 | 52·6 | 761·1 | 55·1 | W |
| 4 0 | 25·47 | 515·1 | 53·4 | 781·0 | 56·0 | W |
| 5 0 | 23·65 | 546·9 | 54·2 | 757·7 | 56·7 | B |
| 6 0 | 24·84 | 535·1 | 54·9 | 817·5 | 57·2 | H |
| 7 0 | 13·12 | 572·3 | 55·3 | 922·9 | 57·4 | H |
| 8 0 | 12·13 | 517·3 | 55·5 | 822·1 | 57·2 | D |
| 9 0 | 17·65 | 524·0 | 55·6 | 780·3 | 57·0 | D |
| 10 0 | 18·70 | 527·5 | 55·7 | 748·1 | 56·9 | B |
| 11 0 | 25 16·99 | 529·3 | 55·5 | 728·0 | 56·5 | H |
| 12 0† | 24 48·47 | 515·8 | 55·3 | 640·2 | 56·0 | H |
| 13 0† | 25 10·61 | 522·1 | 55·0 | 621·4 | 55·7 | H |
| 14 0† | 14·40 | 522·5 | 54·8 | 697·6 | 55·4 | H |
| 15 0 | 16·82 | 521·1 | 54·5 | 719·8 | 55·0 | H |
| 16 0 | 13·00 | 517·0 | 54·2 | 710·6 | 54·2 | H |
| 17 0 | 18·81 | 518·6 | 53·8 | 715·6 | 53·5 | H |
| 18 0 | 15·51 | 519·6 | 53·4 | 719·6 | 52·9 | H |
| 19 0 | 12·65 | 516·9 | 53·0 | 733·3 | 52·3 | W |
| 20 0 | 13·83 | 514·3 | 52·6 | 744·0 | 51·9 | W |

| Göttingen Mean Time of Declination Obs. | Declination. | Bifilar. Corrected. | Bifilar. Thermometer. | Balance. Corrected. | Balance. Thermometer. | Observer's Initial. |
|---|---|---|---|---|---|---|
| d. h. m. | ° ′ | Sc. Div. | ° | Mic. Div. | ° | |
| 25 21 0 | 25 12·89 | 511·0 | 52·3 | 731·4 | 51·8 | B |
| 22 3 | 16·52 | 509·5 | 52·1 | 732·8 | 52·1 | W |
| 23 0 | 17·36 | 518·6 | 52·2 | 722·9 | 52·8 | W |
| 26 0 0† | 23·54 | 499·4 | 52·5 | 739·5 | 53·6 | W |
| 1 0† | 33·28 | 488·1 | 52·8 | 740·6 | 54·2 | W |
| 2 0† | 26·23 | 525·3 | 53·2 | 726·1 | 54·6 | W |
| 3 0 | 24·45 | 519·7 | 53·6 | 734·5 | 54·9 | W |
| 4 0† | 26·90 | 548·6 | 53·9 | 765·3 | 55·3 | W |
| 5 0† | 24·69 | 509·0 | 54·2 | 806·6 | 55·7 | W |
| 6 0† | 14·08 | 518·5 | 54·5 | 838·0 | 56·1 | H |
| 7 0 | 16·92 | 531·8 | 54·8 | 811·1 | 56·2 | H |
| 8 0 | 19·44 | 527·8 | 55·1 | 782·2 | 55·9 | H |
| 9 0 | 14·64 | 527·7 | 55·0 | 762·9 | 55·3 | H |
| 10 0 | 16·79 | 522·9 | 54·8 | 746·3 | 54·5 | H |
| 11 0 | 17·40 | 520·8 | 54·3 | 734·3 | 53·5 | B |
| 12 9 | 17·42 | 517·2 | 53·7 | 724·0 | 52·5 | B |
| 13 0† | 25 28·32 | 510·6 | 53·1 | 625·4 | 51·8 | B |
| 14 0† | 13·63 | 516·2 | 52·6 | 641·6 | 51·2 | B |
| 15 0 | 16·30 | 515·8 | 52·1 | 676·0 | 50·5 | B |
| 16 0† | 20·49 | 490·0 | 51·6 | 622·2 | 49·7 | B |
| 17 0† | 23·02 | 501·5 | 51·1 | 612·7 | 49·3 | B |
| 18 0 | 15·71 | 519·0 | 50·6 | 647·6 | 48·8 | B |
| 19 0 | 15·45 | 506·5 | 50·1 | 680·2 | 48·3 | H |
| 20 0 | 14·30 | 509·3 | 49·8 | 721·4 | 48·2 | H |
| 21 0† | 16·53 | 510·8 | 49·5 | 731·6 | 48·2 | W |
| 22 0† | 16·79 | 504·0 | 49·2 | 747·8 | 48·6 | H |
| 23 0 | 18·58 | 503·2 | 49·2 | 744·3 | 49·2 | H |
| 27 0 0 | 20·30 | 507·1 | 49·4 | 748·5 | 50·0 | H |
| 1 0 | 22·53 | 512·6 | 49·8 | 750·6 | 51·0 | H |
| 2 0 | 22·91 | 519·6 | 50·2 | 745·0 | 51·5 | H |
| 3 0 | 23·19 | 525·2 | 50·6 | 753·7 | 52·0 | H |
| 4 0 | 21·10 | 523·1 | 51·0 | 751·2 | 52·4 | H |
| 5 0 | 18·34 | 528·7 | 51·4 | 760·4 | 52·8 | H |
| 6 0† | 18·10 | 547·6 | 51·8 | 768·0 | 52·9 | B |
| 7 0† | 09·69 | 554·5 | 52·0 | 798·7 | 53·0 | B |
| 8 0† | 16·84 | 531·4 | 52·2 | 771·1 | 53·1 | B |
| 9 0† | 17·89 | 532·9 | 52·3 | 747·2 | 52·9 | B |
| 10 0† | 16·70 | 519·6 | 52·2 | 738·9 | 52·7 | B |
| 11 0† | 21·24 | 511·7 | 52·1 | 703·7 | 52·5 | W |
| 12 0 | 19·41 | 525·6 | 52·0 | 697·3 | 52·2 | W |
| 28 13 0 | 25 17·33 | 524·7 | 54·8 | 733·4 | 54·3 | H |
| 14 0 | 16·73 | 522·9 | 54·2 | 734·6 | 53·7 | H |
| 15 0 | 16·41 | 522·2 | 53·6 | 739·3 | 52·8 | H |
| 16 0 | 15·34 | 521·1 | 53·0 | 739·3 | 51·9 | H |
| 17 0 | 15·41 | 515·9 | 52·4 | 736·5 | 51·0 | H |
| 18 0 | 15·34 | 513·5 | 51·8 | 738·1 | 50·0 | H |
| 19 0 | 16·05 | 519·5 | 51·2 | 731·7 | 49·4 | W |
| 20 0 | 16·62 | 514·3 | 50·7 | 737·6 | 49·0 | W |
| 21 4 | 15·81 | 507·6 | 50·2 | 737·7 | 48·9 | B |
| 22 0 | 15·85 | 512·3 | 50·0 | 747·6 | 49·2 | W |
| 23 0 | 18·57 | 516·2 | 49·9 | 741·6 | 49·9 | W |
| 29 0 0 | 20·50 | 515·8 | 50·2 | 741·8 | 51·5 | W |
| 1 0 | 22·84 | 511·3 | 51·0 | 737·3 | 53·3 | W |
| 2 0 | 26·13 | 525·5 | 52·3 | 742·3 | 55·5 | W |
| 3 0 | 25·53 | 527·8 | 53·8 | 729·3 | 57·5 | W |
| 4 0 | 25·11 | 516·5 | 55·3 | 737·5 | 59·3 | W |

DECLINATION. Magnet untouched, April 5d—May 28d.

BIFILAR. Observed 2m after the Declination, $k=0{\cdot}000140$. BALANCE. Observed 3m after the Declination, $k=0{\cdot}0000085$.

† Extra Observations made.

| Göttingen Mean Time of Declination Obs. | | | Declination. | Bifilar. | | Balance. | | Observer's Initial. |
|---|---|---|---|---|---|---|---|---|
| | | | | Corrected. | Thermometer. | Corrected. | Thermometer. | |
| d. | h. | m. | ° ′ | Sc. Div. | ° | Mic. Div. | ° | |
| 29 | 5 | 0 | 25 22·85 | 539·0 | 56·9 | 764·4 | 60·7 | W |
| | 6 | 0 | 20·09 | 530·4 | 58·0 | 780·6 | 61·5 | W |
| | 7 | 0 | 17·61 | 538·2 | 58·8 | 787·9 | 61·9 | H |
| | 8 | 0† | 12·78 | 529·1 | 59·1 | 805·2 | 61·6 | H |
| | 9 | 0 | 16·36 | 530·1 | 59·2 | 771·8 | 61·0 | H |
| | 10 | 0 | 16·52 | 527·0 | 59·0 | 758·0 | 60·0 | H |
| | 11 | 0† | 15·54 | 532·5 | 58·6 | 739·5 | 59·0 | B |
| | 12 | 0† | 10·75 | 528·5 | 58·0 | 704·7 | 58·4 | B |
| | 13 | 0† | 25 09·86 | 514·3 | 57·7 | 711·8 | 57·7 | B |
| | 14 | 0† | 15·76 | 520·1 | 57·1 | 721·4 | 56·5 | B |
| | 15 | 0 | 16·41 | 518·9 | 56·5 | 715·4 | 55·5 | B |
| | 16 | 0 | 18·13 | 509·8 | 55·8 | 717·4 | 54·0 | B |
| | 17 | 0† | 16·46 | 518·9 | 54·9 | 704·4 | 52·7 | B |
| | 18 | 0 | 12·87 | 518·3 | 54·0 | 705·2 | 51·6 | B |
| | 19 | 0 | 13·54 | 517·0 | 53·1 | 721·6 | 50·6 | H |
| | 20 | 0 | 12·98 | 514·0 | 52·4 | 747·1 | 50·0 | H |
| | 21 | 0 | 13·63 | 511·9 | 51·9 | 747·4 | 49·8 | W |
| | 22 | 0 | 14·82 | 511·2 | 51·4 | 731·5 | 49·9 | H |
| | 23 | 0 | 17·26 | 510·5 | 51·2 | 721·3 | 50·5 | W |
| 30 | 0 | 0 | 21·27 | 512·0 | 51·2 | 758·9 | 52·0 | H |
| | 1 | 0 | 23·34 | 508·0 | 51·8 | 766·7 | 53·5 | H |
| | 2 | 0 | 22·53 | 520·5 | 52·4 | 731·5 | 55·0 | H |
| | 3 | 0 | 21·86 | 523·8 | 53·5 | 735·4 | 56·5 | H |
| | 4 | 0 | 20·06 | 525·7 | 54·7 | 742·5 | 58·0 | H |
| | 5 | 0 | 19·46 | 530·6 | 56·0 | 733·0 | 59·5 | H |
| | 6 | 0 | 18·16 | 537·2 | 57·1 | 753·3 | 60·1 | B |
| | 7 | 0 | 14·41 | 534·6 | 57·9 | 785·5 | 60·5 | B |
| | 8 | 0 | 13·49 | 536·1 | 58·4 | 790·8 | 61·5 | B |
| | 9 | 0 | 15·45 | 528·1 | 58·7 | 774·9 | 60·3 | B |
| | 10 | 0 | 15·54 | 528·1 | 58·5 | 750·1 | 59·5 | B |
| | 11 | 0 | 13·64 | 527·6 | 58·0 | 723·8 | 58·5 | W |
| | 12 | 0 | 18·50 | 529·0 | 57·6 | 678·5 | 57·4 | W |
| | 13 | 0 | 25 15·09 | 524·9 | 56·9 | 662·4 | 56·4 | W |
| | 14 | 0 | 23·07 | 512·4 | 56·2 | 635·4 | 55·3 | W |
| | 15 | 0 | 19·32 | 514·1 | 55·6 | 608·1 | 54·4 | W |
| | 16 | 0 | 16·65 | 524·7 | 54·9 | 629·0 | 53·4 | W |
| | 17 | 0 | 14·73 | 504·3 | 54·2 | 657·4 | 52·3 | W |
| | 18 | 0 | 14·58 | 518·8 | 53·5 | 672·9 | 51·5 | W |
| | 19 | 0 | 12·78 | 518·8 | 52·9 | 704·2 | 50·8 | B |
| | 20 | 0 | 12·51 | 516·8 | 52·3 | 716·3 | 50·4 | B |
| | 21 | 0 | 15·71 | 499·2 | 51·9 | 726·7 | 50·4 | H |
| | 22 | 0 | 18·77 | 494·4 | 51·6 | 736·1 | 50·5 | B |
| | 23 | 0 | 21·48 | 497·5 | 51·3 | 721·6 | 51·5 | H |
| 1 | 0 | 0 | 24·55 | 508·9 | 51·9 | 723·3 | 53·2 | B |
| | 1 | 0 | 22·45 | 526·9 | 52·5 | 724·0 | 55·2 | H |
| | 2 | 0 | 23·45 | 530·1 | 53·9 | 717·1 | 57·2 | B |
| | 3 | 0 | 21·43 | 527·6 | 55·4 | 713·3 | 59·0 | B |
| | 4 | 0 | 19·17 | 530·8 | 57·0 | 726·1 | 60·7 | B |
| | 5 | 0 | 18·60 | 534·6 | 58·4 | 750·4 | 62·3 | B |
| | 6 | 0 | 18·77 | 539·9 | 59·7 | 755·4 | 63·5 | W |
| | 7 | 0† | 12·15 | 540·9 | 60·7 | 761·6 | 64·0 | W |
| | 8 | 0 | 14·50 | 535·7 | 61·3 | 754·6 | 64·2 | W |
| | 9 | 0 | 15·14 | 529·2 | 61·7 | 745·6 | 63·9 | W |
| | 10 | 0 | 10·97 | 522·7 | 61·7 | 735·3 | 63·2 | W |
| | 11 | 0† | 09·42 | 516·6 | 61·4 | 699·6 | 62·6 | H |
| | 12 | 0† | 08·88 | 517·5 | 61·1 | 680·7 | 62·1 | H |

| Göttingen Mean Time of Declination Obs. | | | Declination. | Bifilar. | | Balance. | | Observer's Initial. |
|---|---|---|---|---|---|---|---|---|
| | | | | Corrected. | Thermometer. | Corrected. | Thermometer. | |
| d. | h. | m. | ° ′ | Sc. Div. | ° | Mic. Div. | ° | |
| 1 | 13 | 0 | 25 12·83 | 519·7 | 60·8 | 674·1 | 61·5 | H |
| | 14 | 0 | 15·41 | 524·0 | 60·4 | 685·8 | 60·6 | H |
| | 15 | 0 | 17·81 | 520·4 | 59·9 | 693·8 | 59·7 | H |
| | 16 | 0 | 18·13 | 520·8 | 59·3 | 697·4 | 58·6 | H |
| | 17 | 0 | 16·21 | 524·0 | 58·6 | 703·4 | 57·6 | H |
| | 18 | 0 | 14·68 | 515·8 | 57·9 | 710·7 | 56·5 | H |
| | 19 | 0 | 16·52 | 514·2 | 57·3 | 717·1 | 56·0 | W |
| | 20 | 0 | 17·13 | 518·7 | 56·9 | 716·0 | 55·8 | W |
| | 21 | 0 | 15·92 | 514·6 | 56·6 | 729·1 | 55·9 | B |
| | 22 | 0 | 16·60 | 513·6 | 56·3 | 729·6 | 56·2 | W |
| | 23 | 0 | 19·15 | 504·2 | 56·3 | 731·2 | 56·8 | W |
| 2 | 0 | 0 | 22·25 | 513·2 | 56·6 | 725·2 | 57·5 | W |
| | 1 | 0 | 22·25 | 520·5 | 57·0 | 723·6 | 58·5 | B |
| | 2 | 0 | 22·40 | 525·9 | 57·7 | 718·7 | 59·5 | W |
| | 3 | 0 | 22·40 | 529·8 | 58·6 | 721·6 | 60·6 | W |
| | 4 | 0 | 21·86 | 531·5 | 59·5 | 727·5 | 62·0 | W |
| | 5 | 0 | 18·79 | 538·3 | 60·5 | 728·6 | 63·3 | W |
| | 6 | 0 | 15·52 | 538·9 | 61·5 | 738·7 | 64·4 | H |
| | 7 | 0 | 18·37 | 537·7 | 62·5 | 749·0 | 65·2 | H |
| | 8 | 0 | 19·04 | 536·2 | 63·2 | 734·4 | 65·4 | H |
| | 9 | 0 | 18·10 | 534·1 | 63·5 | 737·4 | 65·5 | H |
| | 10 | 0 | 16·89 | 526·5 | 63·3 | 738·4 | 64·5 | H |
| | 11 | 0† | 12·85 | 541·8 | 63·1 | 696·8 | 63·5 | B |
| | 12 | 0† | 11·14 | 524·7 | 62·7 | 645·4 | 62·7 | B |
| | 13 | 0† | 25 07·60 | 509·4 | 62·1 | 642·3 | 62·0 | B |
| | 14 | 0 | 17·34 | 516·9 | 61·6 | 652·2 | 61·0 | B |
| | 15 | 0† | 15·18 | 506·5 | 61·0 | 662·3 | 59·7 | B |
| | 16 | 0 | 17·00 | 519·1 | 60·2 | 661·8 | 58·5 | B |
| | 17 | 0 | 13·59 | 519·8 | 59·4 | 679·7 | 57·3 | B |
| | 18 | 0† | 16·90 | 511·3 | 58·7 | 680·0 | 56·2 | B |
| | 19 | 0 | 19·76 | 522·5 | 57·9 | 657·3 | 55·6 | H |
| | 20 | 0 | 16·75 | 519·5 | 57·2 | 667·5 | 55·3 | H |
| | 21 | 0 | 17·26 | 516·2 | 56·8 | 683·8 | 55·2 | W |
| | 22 | 0 | 16·79 | 513·7 | 56·4 | 705·0 | 55·5 | H |
| | 23 | 0 | 17·78 | 516·4 | 56·3 | 710·8 | 56·1 | H |
| 3 | 0 | 0 | 19·75 | 516·8 | 56·4 | 711·8 | 57·2 | H |
| | 1 | 0 | 21·46 | 518·9 | 57·0 | 707·3 | 58·6 | H |
| | 2 | 0 | 21·79 | 522·0 | 58·1 | 712·3 | 60.5 | H |
| | 3 | 0 | 22·87 | 529·6 | 59·2 | 719·7 | 62·5 | H |
| | 4 | 0 | 26·32 | 525·8 | 60·4 | 737·2 | 63·5 | H |
| | 5 | 0† | 17·74 | 546·1 | 61·5 | 785·5 | 64·5 | H |
| | 6 | 0 | 20·18 | 542·3 | 62·3 | 806·0 | 64·9 | B |
| | 7 | 0 | 18·84 | 537·5 | 62·9 | 797·8 | 65·0 | B |
| | 8 | 0 | 18·16 | 526·8 | 63·2 | 788·0 | 64·8 | B |
| | 9 | 0 | 18·43 | 526·2 | 63·1 | 749·5 | 63·6 | B |
| | 10 | 0 | 18·30 | 524·4 | 62·7 | 734·6 | 62·4 | B |
| | 11 | 0 | 17·29 | 523·3 | 62·0 | 727·1 | 61·2 | W |
| | 12 | 0 | 17·39 | 521·2 | 61·3 | 729·7 | 60·2 | W |
| | 13 | 0 | 25 17·33 | 519·8 | 60·6 | 733·6 | 59·1 | W |
| | 14 | 0 | 17·09 | 520·0 | 59·9 | 737·1 | 58·2 | W |
| | 15 | 0 | 17·39 | 519·6 | 59·2 | 737·3 | 57·4 | W |
| | 16 | 0 | 16·93 | 518·5 | 58·6 | 732·7 | 56·6 | W |
| | 17 | 0 | 15·59 | 518·5 | 58·0 | 733·8 | 56·0 | W |
| | 18 | 0 | 16·41 | 517·7 | 57·5 | 735·1 | 55·3 | W |
| | 19 | 0 | 13·59 | 517·6 | 56·9 | 737·1 | 54·9 | B |
| | 20 | 0 | 13·57 | 516·2 | 56·4 | 742·8 | 54·5 | B |

DECLINATION. Magnet untouched, April 5d—May 28d.

BIFILAR. Observed 2m after the Declination, $k$=0·000140. BALANCE. Observed 3m after the Declination, $k$=0·0000085.

† Extra Observations made.

April 29d 21h. A small insect was seen creeping over the left cross plate of the balance magnet, it evidently caused a slight irregularity in the motion of the needle.

April 30d 7h. After the observation the case of the balance was removed in order to remove the insect seen at 29d 21h, but no insect could be seen; the balance readings have been slightly unsteady throughout the day (?).

| Göttingen Mean Time of Declination Obs. | Declination. | Bifilar. Corrected. | Bifilar. Thermometer. | Balance. Corrected. | Balance. Thermometer. | Observer's Initial. |
|---|---|---|---|---|---|---|
| d. h. m. | ° ′ | Sc. Div. | ° | Mic. Div. | ° | |
| 3 21 0 | 25 13·52 | 513·7 | 55·9 | 739·5 | 54·1 | H |
| 22 0 | 15·24 | 508·8 | 55·5 | 734·9 | 53·8 | B |
| 23 0 | 16·82 | 506·2 | 55·1 | 728·4 | 53·7 | H |
| 4 0 0 | 19·61 | 507·2 | 54·9 | 724·7 | 53·5 | B |
| 1 0 | 20·79 | 510·0 | 54·7 | 726·6 | 53·6 | H |
| 2 0 | 21·95 | 515·0 | 54·5 | 736·3 | 53·6 | B |
| 3 0 | 21·24 | 521·7 | 54·4 | 747·7 | 53·8 | B |
| 4 0 | 21·29 | 525·0 | 54·3 | 748·2 | 54·0 | B |
| 5 0 | 20·85 | 528·4 | 54·2 | 748·6 | 53·9 | B |
| 6 0 | 20·16 | 532·2 | 54·1 | 748·4 | 53·6 | W |
| 7 0 | 19·28 | 534·5 | 54·0 | 745·5 | 53·3 | W |
| 8 0 | 18·03 | 529·7 | 53·9 | 748·3 | 53·0 | W |
| 9 0 | 16·92 | 528·4 | 53·6 | 748·3 | 52·6 | W |
| 10 0 | 17·49 | 528·0 | 53·2 | 745·1 | 52·3 | W |
| 11 0 | 16·48 | 524·9 | 52·9 | 745·7 | 52·0 | H |
| 12 0 | 16·23 | 525·7 | 52·6 | 734·1 | 51·5 | H |
| 5 13 0 | 25 16·48 | 531·9 | 55·9 | 721·3 | 55·7 | B |
| 14 0 | 17·63 | 532·8 | 55·6 | 719·1 | 55·4 | B |
| 15 0† | 24·96 | 529·9 | 55·3 | 685·7 | 55·0 | B |
| 16 0† | 12·42 | 530·8 | 55·0 | 666·1 | 55·0 | B |
| 17 0 | 14·84 | 525·2 | 54·8 | 703·9 | 54·7 | B |
| 18 0 | 15·65 | 525·1 | 54·6 | 714·6 | 54·3 | B |
| 19 0 | 16·06 | 524·1 | 54·3 | 719·5 | 54·0 | H |
| 20 0 | 16·08 | 522·0 | 54·1 | 724·4 | 53·9 | H |
| 21 0 | 16·53 | 518·4 | 54·0 | 724·6 | 54·0 | W |
| 22 0 | 19·82 | 514·5 | 53·9 | 726·6 | 54·4 | H |
| 23 0 | 19·21 | 516·9 | 54·0 | 721·0 | 55·0 | W |
| 6 0 0 | 23·58 | 515·2 | 54·5 | 720·9 | 56·4 | H |
| 1 0 | 24·17 | 524·0 | 55·5 | 715·0 | 58·0 | B |
| 2 0 | 22·91 | 524·0 | 56·6 | 703·7 | 59·7 | H |
| 3 0 | 21·90 | 526·9 | 57·8 | 697·5 | 61·0 | H |
| 4 0 | 21·77 | 514·7 | 58·9 | 718·0 | 62·1 | H |
| 5 0 | 20·11 | 539·1 | 59·7 | 738·7 | 62·7 | H |
| 6 0 | 19·44 | 534·0 | 60·2 | 767·1 | 62·8 | B |
| 7 0 | 19·14 | 529·9 | 60·7 | 775·6 | 63·0 | B |
| 8 0 | 18·77 | 539·5 | 60·9 | 754·7 | 62·8 | B |
| 9 0 | 18·13 | 533·3 | 60·9 | 742·3 | 62·5 | B |
| 10 0 | 17·13 | 532·4 | 60·9 | 734·2 | 62·1 | B |
| 11 0 | 16·48 | 536·9 | 60·8 | 723·9 | 61·5 | W |
| 12 0 | 11·57 | 529·6 | 60·4 | 715·5 | 61·0 | W |
| 13 0 | 25 16·33 | 529·5 | 60·0 | 704·6 | 60·5 | W |
| 14 0 | 15·12 | 522·9 | 59·7 | 710·4 | 59·9 | W |
| 15 0 | 16·87 | 524·0 | 59·4 | 716·7 | 59·4 | W |
| 16 0 | 19·79 | 520·9 | 59·0 | 722·4 | 58·8 | W |
| 17 0 | 17·00 | 524·3 | 58·7 | 727·3 | 58·4 | W |
| 18 0 | 15·74 | 524·2 | 58·4 | 733·5 | 58·0 | W |
| 19 0 | 13·57 | 522·0 | 58·1 | 735·3 | 57·5 | B |
| 20 0 | 13·76 | 521·2 | 57·7 | 739·3 | 57·0 | B |
| 21 0 | 13·46 | 517·2 | 57·3 | 731·8 | 56·5 | H |
| 22 0 | 14·50 | 514·9 | 56·9 | 724·9 | 56·2 | B |
| 23 0 | 18·10 | 512·2 | 56·7 | 720·9 | 56·3 | H |
| 7 0 0 | 20·16 | 513·3 | 56·7 | 730·0 | 56·5 | B |
| 1 0 | 22·20 | 515·2 | 56·6 | 728·9 | 57·2 | B |
| 2 0 | 22·98 | 521·2 | 57·0 | 728·0 | 58·2 | B |
| 3 0 | 22·33 | 522·8 | 57·5 | 718·7 | 59·5 | H |
| 4 0 | 20·35 | 527·2 | 58·4 | 734·1 | 60·8 | H |
| 7 5 0 | 25 19·41 | 529·3 | 59·3 | 737·8 | 61·8 | B |
| 6 0 | 17·96 | 534·7 | 60·1 | 742·7 | 62·2 | W |
| 7 0 | 17·63 | 534·9 | 60·6 | 742·7 | 62·2 | W |
| 8 0 | 17·61 | 536·2 | 60·9 | 740·4 | 62·0 | W |
| 9 0 | 16·12 | 530·8 | 60·8 | 737·8 | 61·5 | W |
| 10 0 | 16·72 | 532·1 | 60·6 | 728·6 | 60·6 | W |
| 11 0 | 17·67 | 531·2 | 60·2 | 710·5 | 59·8 | H |
| 12 0 | 14·33 | 526·1 | 59·7 | 693·3 | 58·9 | H |
| 13 0 | 25 12·82 | 520·7 | 59·0 | 684·5 | 57·9 | H |
| 14 0 | 14·37 | 523·0 | 58·4 | 702·6 | 56·8 | H |
| 15 0 | 14·26 | 524·6 | 57·8 | 692·4 | 55·7 | H |
| 16 0† | 18·63 | 503·6 | 57·0 | 721·4 | 54·8 | H |
| 17 0† | 27·29 | 516·6 | 56·2 | 652·9 | 53·9 | H |
| 18 0 | 20·85 | 529·2 | 55·4 | 626·1 | 52·9 | H |
| 19 0 | 16·70 | 529·1 | 54·7 | 634·1 | 52·2 | W |
| 20 0 | 12·18 | 525·8 | 54·1 | 665·3 | 52·0 | W |
| 21 0 | 12·42 | 514·4 | 53·8 | 687·2 | 52·1 | B |
| 22 0 | 15·01 | 513·7 | 53·5 | 703·3 | 52·5 | W |
| 23 0 | 17·27 | 519·7 | 53·3 | 697·5 | 53·2 | W |
| 8 0 0 | 18·32 | 515·9 | 53·6 | 714·9 | 54·4 | W |
| 1 0 | 21·88 | 513·6 | 54·2 | 728·8 | 56·2 | W |
| 2 0 | 21·84 | 513·2 | 55·1 | 726·3 | 57·8 | W |
| 3 0 | 23·98 | 527·6 | 56·4 | 727·3 | 59·2 | W |
| 4 0 | 22·64 | 527·6 | 57·7 | 723·0 | 60·5 | W |
| 5 0 | 22·10 | 541·0 | 58·7 | 737·8 | 61·3 | W |
| 6 0 | 15·96 | 539·5 | 59·3 | 779·6 | 61·9 | W |
| 7 0 | 16·99 | 550·3 | 59·9 | 778·5 | 62·0 | H |
| 8 0 | 19·44 | 538·5 | 60·1 | 779·9 | 61·6 | H |
| 9 0 | 13·93 | 534·7 | 60·0 | 781·0 | 61·0 | H |
| 10 0† | 16·84 | 529·5 | 59·8 | 765·8 | 60·3 | H |
| 11 0† | 11·57 | 516·2 | 59·4 | 689·1 | 59·6 | B |
| 12 0† | 13·43 | 505·3 | 59·0 | 695·9 | 58·9 | B |
| 13 0† | 25 19·59 | 517·6 | 58·6 | 593·1 | 58·1 | B |
| 14 0 | 15·38 | 527·0 | 58·0 | 611·4 | 57·0 | B |
| 15 0† | 19·62 | 519·5 | 57·3 | 633·8 | 56·0 | B |
| 16 0† | 13·61 | 517·1 | 56·7 | 593·3 | 54·9 | B |
| 17 0 | 13·52 | 524·5 | 55·9 | 638·0 | 53·8 | B |
| 18 0 | 14·17 | 522·4 | 55·1 | 654·0 | 52·7 | B |
| 19 0† | 10·83 | 523·0 | 54·3 | 669·3 | 52·2 | H |
| 20 0 | 12·92 | 518·2 | 53·8 | 688·0 | 52·0 | H |
| 21 0 | 14·80 | 511·9 | 53·4 | 700·2 | 51·8 | W |
| 22 0 | 18·67 | 503·7 | 53·1 | 719·1 | 52·2 | H |
| 23 0 | 21·23 | 511·8 | 53·0 | 710·7 | 52·8 | W |
| 9 0 0 | 22·74 | 512·0 | 53·1 | 703·4 | 54·0 | W |
| 1 0 | 23·41 | 516·2 | 53·8 | 696·3 | 55·4 | W |
| 2 0 | 26·03 | 523·7 | 54·7 | 711·5 | 56·8 | W |
| 3 0 | 23·63 | 517·8 | 55·8 | 726·9 | 58·3 | W |
| 4 0 | 23·65 | 532·7 | 56·9 | 737·6 | 59·7 | W |
| 5 0 | 22·60 | 535·4 | 58·0 | 765·1 | 60·9 | W |
| 6 0 | 20·85 | 533·0 | 59·0 | 783·3 | 61·5 | B |
| 7 0 | 18·77 | 534·5 | 59·5 | 765·4 | 61·5 | B |
| 8 0 | 18·77 | 535·0 | 59·7 | 741·5 | 61·1 | B |
| 9 0 | 18·47 | 531·9 | 59·7 | 735·0 | 60·7 | B |
| 10 0 | 17·61 | 527·6 | 59·5 | 733·0 | 60·3 | B |
| 11 0 | 16·38 | 527·8 | 59·2 | 731·0 | 59·8 | W |
| 12 0† | 11·57 | 519·3 | 59·0 | 714·3 | 59·3 | W |

DECLINATION. Magnet untouched, April 5d—May 28d.

BIFILAR. Observed 2m after the Declination, $k$=0·000140. BALANCE. Observed 3m after the Declination, $k$=0·0000085.

† Extra Observations made.

| Göttingen Mean Time of Declination Obs. | | | Declination. | Bifilar. Corrected. | Bifilar. Thermometer. | Balance. Corrected. | Balance. Thermometer. | Observer's Initial. |
|---|---|---|---|---|---|---|---|---|
| d. | h. | m. | ° ′ | Sc. Div. | ° | Mic. Div. | ° | |
| 9 | 13 | 0 | 25 13·84 | 517·3 | 58·7 | 701·1 | 59·0 | W |
| | 14 | 0 | 15·51 | 523·4 | 58·4 | 710·0 | 58·7 | W |
| | 15 | 0 | 18·63 | 524·3 | 58·1 | 692·3 | 58·3 | W |
| | 16 | 0 | 16·95 | 525·1 | 57·9 | 707·4 | 57·9 | W |
| | 17 | 0 | 14·46 | 524·3 | 57·7 | 716·5 | 57·2 | W |
| | 18 | 0 | 14·68 | 522·7 | 57·3 | 724·8 | 56·5 | W |
| | 19 | 0 | 14·91 | 520·1 | 56·9 | 733·5 | 56·0 | B |
| | 20 | 0 | 14·26 | 518·3 | 56·5 | 737·1 | 55·6 | B |
| | 21 | 0 | 14·78 | 516·8 | 56·1 | 733·0 | 55·1 | H |
| | 22 | 0 | 17·07 | 515·9 | 55·7 | 724·4 | 54·6 | B |
| | 23 | 0 | 18·63 | 515·1 | 55·2 | 721·0 | 54·3 | H |
| 10 | 0 | 0 | 20·25 | 518·4 | 54·9 | 715·7 | 54·0 | B |
| | 1 | 0 | 21·70 | 522·2 | 54·6 | 713·3 | 54·0 | H |
| | 2 | 0 | 21·86 | 522·9 | 54·3 | 717·4 | 54·0 | B |
| | 3 | 0 | 22·30 | 536·3 | 54·2 | 724·4 | 54·1 | B |
| | 4 | 0 | 21·77 | 533·3 | 54·1 | 736·2 | 54·0 | B |
| | 5 | 0 | 20·52 | 529·9 | 54·1 | 755·7 | 54·1 | H |
| | 6 | 0 | 18·27 | 532·2 | 54·0 | 759·9 | 54·0 | W |
| | 7 | 0 | 19·31 | 535·9 | 53·9 | 741·6 | 53·6 | W |
| | 8 | 0 | 18·88 | 533·8 | 53·8 | 738·4 | 53·3 | W |
| | 9 | 0 | 18·34 | 532·1 | 53·6 | 736·0 | 53·0 | W |
| | 10 | 0 | 18·10 | 531·0 | 53·3 | 735·7 | 52·8 | W |
| | 11 | 0 | 17·83 | 530·6 | 53·1 | 732·8 | 52·5 | H |
| | 12 | 0 | 17·94 | 526·7 | 53·0 | 732·8 | 52·3 | H |
| | 13 | 0 | 25 17·49 | 526·9 | 52·8 | 733·4 | 52·2 | H |
| | 14 | 0 | 17·09 | 526·6 | 52·6 | 732·4 | 52·0 | H |
| | 15 | 0 | 17·02 | 526·2 | 52·4 | 731·7 | 52·0 | H |
| | 16 | 0 | 17·71 | 521·0 | 52·3 | 728·0 | 51·9 | H |
| | 17 | 0 | 13·46 | 522·4 | 52·2 | 727·5 | 51·7 | H |
| | 18 | 0 | 12·62 | 522·4 | 52·1 | 735·5 | 51·6 | H |
| | 19 | 9 | 13·94 | 520·8 | 51·9 | 739·1 | 51·3 | W |
| | 20 | 0 | 14·46 | 520·2 | 51·8 | 739·9 | 51·2 | W |
| | 21 | 0 | 15·65 | 517·0 | 51·7 | 738·4 | 51·1 | B |
| | 22 | 0 | 18·20 | 511·4 | 51·6 | 736·0 | 51·2 | W |
| | 23 | 0 | 19·51 | 511·0 | 51·6 | 726·5 | 51·4 | W |
| 11 | 0 | 0 | 21·09 | 513·1 | 51·6 | 718·0 | 51·6 | W |
| | 1 | 0 | 23·24 | 520·6 | 51·7 | 711·3 | 51·8 | W |
| | 2 | 0 | 22·27 | 522·0 | 51·8 | 717·2 | 52·0 | W |
| | 3 | 0 | 20·80 | 523·3 | 51·9 | 731·4 | 52·3 | W |
| | 4 | 0 | 18·88 | 521·8 | 52·0 | 739·8 | 52·6 | W |
| | 5 | 0 | 17·70 | 530·4 | 52·2 | 745·2 | 52·9 | W |
| | 6 | 0 | 17·78 | 535·2 | 52·3 | 748·1 | 53·2 | H |
| | 7 | 0 | 17·51 | 536·3 | 52·5 | 750·3 | 53·2 | H |
| | 8 | 0 | 14·53 | 537·0 | 52·7 | 749·8 | 53·2 | H |
| | 9 | 0 | 16·18 | 531·7 | 52·8 | 750·7 | 53·3 | H |
| | 10 | 0 | 16·28 | 529·1 | 52·8 | 742·0 | 53·3 | H |
| | 11 | 0 | 15·88 | 531·4 | 52·8 | 735·8 | 53·3 | B |
| | 12 | 0 | 15·69 | 527·0 | 52·8 | 729·5 | 53·2 | B |
| 12 | 13 | 0 | 25 13·36 | 525·5 | 59·8 | 711·2 | 60·0 | W |
| | 14 | 0 | 15·47 | 527·4 | 59·4 | 712·0 | 59·3 | W |
| | 15 | 0 | 15·74 | 527·3 | 59·0 | 714·9 | 58·7 | W |
| | 16 | 0 | 16·38 | 527·7 | 58·5 | 718·2 | 58·0 | W |
| | 17 | 0 | 15·14 | 524·5 | 58·0 | 724·1 | 57·2 | W |
| | 18 | 0 | 13·64 | 521·7 | 57·5 | 730·2 | 56·5 | W |
| | 19 | 0 | 13·96 | 521·8 | 57·1 | 728·4 | 55·9 | B |
| | 20 | 0 | 13·64 | 517·3 | 56·7 | 725·9 | 55·7 | B |

| Göttingen Mean Time of Declination Obs. | | | Declination. | Bifilar. Corrected. | Bifilar. Thermometer. | Balance. Corrected. | Balance. Thermometer. | Observer's Initial. |
|---|---|---|---|---|---|---|---|---|
| d. | h. | m. | ° ′ | Sc. Div. | ° | Mic. Div. | ° | |
| 12 | 21 | 0 | 25 15·41 | 516·1 | 56·3 | 734·7 | 55·9 | H |
| | 22 | 0 | 17·83 | 514·1 | 56·1 | 724·2 | 56·2 | H |
| | 23 | 0 | 21·29 | 515·2 | 56·2 | 707·0 | 56·8 | H |
| 13 | 0 | 0 | 22·64 | 518·8 | 56·7 | 696·6 | 57·6 | B |
| | 1 | 0 | 23·41 | 525·1 | 57·2 | 692·7 | 59·0 | B |
| | 2 | 0 | 22·94 | 528·1 | 58·1 | 698·1 | 60·5 | B |
| | 3 | 0 | 21·19 | 524·4 | 59·1 | 705·2 | 62·1 | B |
| | 4 | 0 | 19·12 | 533·8 | 60·3 | 706·6 | 63·8 | H |
| | 5 | 0 | 18·11 | 533·5 | 61·7 | 716·6 | 65·2 | H |
| | 6 | 0 | 18·13 | 537·4 | 62·9 | 725·6 | 66·0 | W |
| | 7 | 0 | 18·05 | 537·2 | 63·8 | 730·4 | 66·4 | W |
| | 8 | 0 | 18·14 | 534·3 | 64·1 | 728·9 | 66·3 | W |
| | 9 | 0 | 18·03 | 534·3 | 64·2 | 723·2 | 65·8 | W |
| | 10 | 0 | 17·33 | 529·0 | 64·1 | 724·6 | 65·3 | W |
| | 11 | 0 | 15·81 | 529·0 | 63·9 | 722·3 | 64·8 | H |
| | 12 | 0 | 16·28 | 527·7 | 63·6 | 716·3 | 64·3 | H |
| | 13 | 0 | 25 16·84 | 527·8 | 63·3 | 712·9 | 63·8 | H |
| | 14 | 0 | 16·66 | 528·0 | 63·0 | 712·2 | 63·3 | H |
| | 15 | 0 | 16·12 | 528·4 | 62·7 | 711·4 | 62·7 | H |
| | 16 | 0 | 15·98 | 528·1 | 62·3 | 713·7 | 62·3 | H |
| | 17 | 0 | 12·04 | 526·4 | 61·9 | 709·3 | 61·8 | H |
| | 18 | 0 | 14·20 | 532·6 | 61·8 | 702·4 | 61·3 | H |
| | 19 | 0 | 10·87 | 531·8 | 61·6 | 698·9 | 61·0 | W |
| | 20 | 0† | 08·68 | 528·2 | 61·3 | 696·4 | 60·7 | W |
| | 21 | 0† | 12·09 | 515·9 | 61·0 | 690·7 | 60·4 | B |
| | 22 | 0† | 12·78 | 512·9 | 60·7 | 691·5 | 59·9 | W |
| | 23 | 0† | 18·81 | 503·4 | 60·3 | 687·2 | 59·4 | W |
| 14 | 0 | 0 | 24·55 | 509·1 | 60·0 | 693·4 | 59·0 | W |
| | 1 | 0 | 24·25 | 527·5 | 59·7 | 689·9 | 58·9 | W |
| | 2 | 0 | 26·16 | 514·1 | 59·5 | 694·9 | 58·9 | W |
| | 3 | 0 | 25·24 | 522·8 | 59·4 | 710·2 | 59·0 | W |
| | 4 | 0 | 22·75 | 526·2 | 59·3 | 720·9 | 59·3 | W |
| | 5 | 0 | 20·02 | 535·5 | 59·5 | 727·1 | 59·6 | W |
| | 6 | 0 | 18·52 | 536·2 | 59·7 | 728·1 | 59·8 | D |
| | 7 | 0 | 17·91 | 535·2 | 59·8 | 725·1 | 59·8 | D |
| | 8 | 0 | 17·29 | 535·9 | 59·9 | 723·6 | 59·5 | D |
| | 9 | 0 | 17·53 | 532·7 | 59·7 | 719·2 | 58·9 | D |
| | 10 | 0 | 17·02 | 530·4 | 59·3 | 720·9 | 58·2 | H |
| | 11 | 0 | 16·38 | 530·6 | 58·9 | 723·4 | 57·5 | B |
| | 12 | 0 | 14·03 | 527·7 | 58·5 | 706·5 | 57·0 | B |
| | 13 | 0 | 25 15·51 | 527·1 | 58·0 | 709·0 | 56·4 | B |
| | 14 | 0† | 15·89 | 517·2 | 57·5 | 613·1 | 55·8 | B |
| | 15 | 0† | 01·02 | 522·1 | 57·0 | 527·9 | 55·5 | B |
| | 16 | 0† | 11·34 | 496·8 | 56·7 | 545·3 | 55·2 | B |
| | 17 | 0† | 16·28 | 521·2 | 56·3 | 604·3 | 54·9 | B |
| | 18 | 0 | 13·46 | 526·3 | 55·9 | 658·1 | 54·4 | B |
| | 19 | 0 | 14·04 | 528·0 | 55·5 | 675·3 | 54·1 | H |
| | 20 | 0 | 14·82 | 522·2 | 55·1 | 677·2 | 54·0 | H |
| | 21 | 0 | 14·48 | 521·4 | 55·0 | 687·2 | 54·0 | W |
| | 22 | 0 | 13·84 | 519·3 | 54·9 | 690·4 | 54·1 | H |
| | 23 | 0 | 17·63 | 517·4 | 54·8 | 688·8 | 54·6 | H |
| 15 | 0 | 0 | 20·15 | 517·3 | 54·9 | 693·8 | 55·5 | H |
| | 1 | 0 | 22·30 | 519·2 | 55·3 | 697·7 | 56·4 | H |
| | 2 | 0 | 22·74 | 528·5 | 55·9 | 696·2 | 57·3 | H |
| | 3 | 0 | 22·20 | 527·6 | 56·5 | 707·6 | 58·3 | H |
| | 4 | 0 | 22·20 | 525·8 | 57·2 | 714·9 | 59·4 | H |

DECLINATION. Magnet untouched, April 5d—May 28d.

BIFILAR. Observed 2m after the Declination, $k$=0·000140. BALANCE. Observed 3m after the Declination, $k$=0·0000085.

† Extra Observations made.

| Göttingen Mean Time of Declination Obs. | | | Declination. | Bifilar. | | Balance. | | Observer's Initial. | Göttingen Mean Time of Declination Obs. | | | Declination. | Bifilar. | | Balance. | | Observer's Initial. |
|---|---|---|---|---|---|---|---|---|---|---|---|---|---|---|---|---|---|
| | | | | Corrected. | Thermometer. | Corrected. | Thermometer. | | | | | | Corrected. | Thermometer. | Corrected. | Thermometer. | |
| d. | h. | m. | ° ′ | Sc. Div. | ° | Mic. Div. | ° | | d. | h. | m. | ° ′ | Sc. Div. | ° | Mic. Div. | ° | |
| 15 | 5 | 0 | 25 20·62 | 540·2 | 58·2 | 711·2 | 60·2 | H | 17 | 13 | 0† | 25 12·06 | 525·3 | 49·3 | 714·4 | 46·5 | B |
| | 6 | 0 | 18·77 | 531·9 | 59·1 | 730·7 | 61·0 | W | | 14 | 0 | 14·31 | 527·0 | 48·6 | 715·7 | 46·0 | B |
| | 7 | 0 | 18·16 | 532·0 | 59·8 | 731·8 | 61·3 | B | | 15 | 0 | 15·86 | 525·8 | 47·9 | 715·3 | 45·1 | B |
| | 8 | 0 | 18·08 | 535·1 | 60·3 | 720·5 | 61·7 | B | | 16 | 0 | 16·25 | 524·6 | 47·3 | 718·8 | 44·4 | B |
| | 9 | 0 | 16·65 | 536·3 | 60·8 | 715·5 | 61·5 | B | | 17 | 0 | 15·58 | 522·8 | 46·7 | 727·7 | 43·8 | B |
| | 10 | 0† | 16·90 | 542·5 | 60·7 | 701·8 | 60·9 | B | | 18 | 0 | 14·65 | 522·6 | 46·1 | 728·1 | 43·3 | B |
| | 11 | 0 | 16·12 | 530·2 | 60·3 | 676·7 | 60·0 | W | | 19 | 0 | 14·04 | 523·3 | 45·5 | 732·4 | 43·2 | H |
| | 12 | 0 | 15·94 | 534·1 | 59·7 | 665·6 | 59·0 | W | | 20 | 0 | 13·72 | 522·0 | 45·1 | 733·4 | 43·2 | H |
| | | | | | | | | | | 21 | 0 | 16·52 | 520·3 | 45·0 | 735·6 | 43·3 | W |
| | 13 | 0 | 25 14·89 | 526·9 | 59·0 | 653·7 | 58·0 | W | | 22 | 0 | 15·81 | 521·8 | 44·8 | 731·1 | 43·6 | H |
| | 14 | 0 | 13·12 | 523·6 | 58·4 | 663·7 | 57·0 | W | | 23 | 0 | 17·20 | 522·2 | 44·7 | 722·3 | 44·2 | H |
| | 15 | 0 | 15·98 | 522·8 | 57·8 | 681·9 | 55·9 | W | 18 | 0 | 0 | 18·87 | 520·7 | 44·8 | 720·8 | 44·9 | H |
| | 16 | 0 | 16·75 | 523·2 | 57·0 | 692·4 | 54·9 | W | | 1 | 0 | 21·46 | 521·4 | 45·0 | 714·4 | 45·5 | H |
| | 17 | 0 | 19·26 | 521·2 | 56·2 | 695·5 | 53·8 | W | | 2 | 0 | 21·30 | 523·9 | 45·5 | 719·1 | 46·2 | H |
| | 18 | 0 | 16·08 | 524·3 | 55·5 | 694·6 | 52·8 | W | | 3 | 0 | 20·05 | 527·3 | 46·0 | 724·5 | 47·0 | H |
| | 19 | 0 | 14·82 | 523·7 | 54·8 | 708·6 | 52·1 | B | | 4 | 0 | 20·35 | 532·9 | 46·5 | 728·2 | 47·6 | H |
| | 20 | 0 | 13·49 | 518·7 | 54·1 | 717·8 | 51·8 | B | | 5 | 0 | 20·05 | 539·1 | 46·9 | 731·4 | 48·2 | H |
| | 21 | 0 | 12·80 | 516·7 | 53·6 | 720·0 | 51·7 | H | | 6 | 0 | 20·05 | 543·3 | 47·3 | 720·9 | 48·5 | B |
| | 22 | 0 | 12·89 | 512·9 | 53·3 | 727·9 | 52·1 | B | | 7 | 0 | 18·35 | 546·1 | 47·7 | 720·2 | 48·7 | B |
| | 23 | 0 | 18·63 | 511·0 | 53·2 | 718·2 | 53·2 | H | | 8 | 0 | 18·82 | 535·2 | 47·9 | 725·6 | 48·7 | B |
| 16 | 0 | 0 | 21·46 | 517·1 | 53·4 | 714·9 | 54·3 | H | | 9 | 0 | 18·10 | 536·6 | 48·0 | 718·3 | 48·3 | B |
| | 1 | 0 | 22·99 | 520·9 | 54·0 | 718·0 | 55·5 | H | | 10 | 0 | 17·94 | 535·5 | 47·9 | 712·6 | 47·8 | B |
| | 2 | 0 | 23·54 | 524·4 | 55·0 | 726·7 | 56·9 | B | | 11 | 0 | 17·87 | 535·0 | 47·7 | 712·6 | 47·3 | W |
| | 3 | 0 | 23·63 | 523·8 | 56·0 | 722·4 | 58·3 | H | | 12 | 0 | 17·47 | 533·2 | 47·3 | 709·1 | 46·8 | W |
| | 4 | 0 | 21·53 | 531·7 | 57·1 | 726·0 | 59·8 | W | | | | | | | | | |
| | 5 | 0 | 19·42 | 532·5 | 58·3 | 725·1 | 60·9 | B | 19 | 13 | 0 | 25 16·72 | 530·9 | 48·0 | 707·1 | 47·5 | H |
| | 6 | 0 | 18·45 | 539·6 | 59·1 | 731·4 | 61·6 | W | | 14 | 0 | 16·63 | 528·9 | 47·8 | 708·3 | 47·4 | H |
| | 7 | 0 | 18·81 | 535·4 | 59·9 | 729·4 | 62·0 | W | | 15 | 0 | 16·19 | 529·3 | 47·5 | 711·3 | 47·2 | H |
| | 8 | 0 | 18·03 | 537·0 | 60·3 | 726·9 | 62·0 | W | | 16 | 0 | 16·08 | 528·3 | 47·3 | 711·3 | 46·9 | H |
| | 9 | 0 | 17·19 | 533·6 | 60·6 | 723·4 | 61·5 | W | | 17 | 0 | 15·22 | 528·0 | 47·1 | 717·4 | 46·7 | H |
| | 10 | 0 | 17·06 | 532·7 | 60·3 | 715·2 | 60·8 | W | | 18 | 0 | 13·83 | 527·6 | 46·9 | 716·8 | 46·5 | H |
| | 11 | 0 | 16·60 | 530·3 | 60·0 | 712·4 | 60·3 | H | | 19 | 0 | 13·77 | 525·0 | 46·8 | 712·3 | 46·2 | W |
| | 12 | 0 | 16·86 | 529·8 | 59·8 | 710·6 | 60·0 | H | | 20 | 0 | 14·67 | 527·2 | 46·7 | 706·7 | 46·2 | W |
| | | | | | | | | | | 21 | 0 | 13·59 | 526·4 | 46·6 | 708·1 | 46·5 | B |
| | 13 | 0 | 25 17·12 | 528·5 | 59·5 | 707·2 | 59·5 | H | | 22 | 0 | 14·84 | 520·8 | 46·7 | 708·3 | 46·9 | W |
| | 14 | 0 | 17·60 | 528·1 | 59·1 | 707·7 | 59·0 | H | | 23 | 0 | 18·84 | 521·4 | 46·9 | 706·0 | 47·5 | W |
| | 15 | 0 | 18·05 | 526·2 | 58·8 | 707·2 | 58·2 | H | 20 | 0 | 0 | 20·63 | 521·5 | 47·2 | 703·4 | 48·2 | W |
| | 16 | 0 | 17·49 | 525·4 | 58·3 | 708·9 | 57·4 | H | | 1 | 0 | 22·00 | 523·1 | 47·7 | 699·3 | 49·0 | B |
| | 17 | 0 | 17·12 | 522·4 | 57·8 | 709·3 | 56·2 | H | | 2 | 0 | 21·46 | 530·5 | 48·2 | 699·6 | 49·9 | W |
| | 18 | 0 | 14·85 | 524·4 | 57·1 | 708·3 | 55·1 | H | | 3 | 0 | 20·89 | 534·8 | 48·9 | 702·6 | 50·8 | W |
| | 19 | 0 | 13·49 | 520·4 | 56·3 | 712·3 | 53·9 | W | | 4 | 0 | 20·85 | 535·4 | 49·7 | 694·0 | 51·5 | W |
| | 20 | 0 | 13·49 | 519·4 | 55·6 | 701·4 | 53·0 | W | | 5 | 0 | 19·89 | 536·9 | 50·2 | 697·9 | 52·2 | W |
| | 21 | 0 | 13·32 | 514·9 | 54·9 | 701·3 | 52·3 | B | | 6 | 0 | 20·00 | 540·1 | 50·7 | 707·3 | 52·5 | H |
| | 22 | 0 | 14·08 | 514·1 | 54·3 | 693·7 | 51·9 | W | | 7 | 0 | 19·51 | 541·9 | 51·2 | 708·8 | 52·9 | H |
| | 23 | 0 | 16·28 | 516·1 | 53·9 | 689·4 | 51·8 | W | | 8 | 0 | 19·81 | 541·9 | 51·7 | 704·3 | 53·2 | W |
| 17 | 0 | 0 | 19·51 | 514·5 | 53·6 | 701·5 | 51·9 | W | | 9 | 0 | 18·84 | 538·6 | 51·9 | 701·1 | 53·1 | H |
| | 1 | 0 | 22·13 | 516·9 | 53·3 | 708·1 | 51·9 | B | | 10 | 0 | 18·16 | 540·9 | 51·9 | 695·9 | 52·5 | H |
| | 2 | 0 | 22·33 | 522·9 | 53·0 | 709·8 | 52·0 | W | | 11 | 0 | 17·53 | 539·5 | 51·8 | 693·1 | 52·0 | B |
| | 3 | 0 | 21·73 | 523·8 | 52·9 | 719·9 | 52·0 | W | | 12 | 0 | 16·95 | 538·4 | 51·5 | 692·5 | 51·5 | B |
| | 4 | 0 | 21·07 | 526·9 | 52·8 | 725·6 | 51·9 | W | | | | | | | | | |
| | 5 | 0 | 19·79 | 530·4 | 52·6 | 729·0 | 51·6 | W | | 13 | 0 | 25 16·92 | 536·7 | 51·2 | 691·6 | 51·0 | B |
| | 6 | 0 | 18·87 | 532·0 | 52·3 | 731·6 | 51·4 | H | | 14 | 0 | 16·25 | 536·1 | 50·9 | 691·3 | 50·5 | B |
| | 7 | 0 | 18·58 | 535·2 | 52·1 | 727·6 | 50·9 | H | | 15 | 0 | 16·12 | 534·7 | 50·6 | 695·0 | 50·0 | B |
| | 8 | 0 | 18·20 | 533·6 | 51·8 | 726·7 | 50·3 | H | | 16 | 0 | 15·29 | 533·4 | 50·3 | 697·8 | 49·6 | B |
| | 9 | 0 | 17·67 | 532·7 | 51·4 | 730·2 | 49·7 | B | | 17 | 0 | 14·26 | 531·4 | 50·0 | 705·1 | 49·3 | B |
| | 10 | 0 | 17·49 | 530·1 | 50·9 | 722·2 | 49·0 | H | | 18 | 0 | 13·27 | 530·4 | 49·8 | 704·9 | 49·1 | B |
| | 11 | 0 | 17·49 | 530·2 | 50·5 | 721·4 | 48·1 | B | | 19 | 0 | 12·35 | 528·9 | 49·5 | 702·1 | 49·0 | H |
| | 12 | 0 | 17·76 | 529·3 | 49·9 | 719·8 | 47·3 | B | | 20 | 0 | 11·82 | 524·4 | 49·3 | 702·2 | 49·0 | H |

DECLINATION. Magnet untouched, April 5d—May 28d.

BIFILAR. Observed 2m after the Declination, $k$=0·000140. BALANCE. Observed 3m after the Declination, $k$=0·0000085.

† Extra Observations made.

| Göttingen Mean Time of Declination Obs. | | | Declination. | Bifilar. Corrected. | Bifilar. Thermometer. | Balance. Corrected. | Balance. Thermometer. | Observer's Initial. |
|---|---|---|---|---|---|---|---|---|
| d. | h. | m. | ° ′ | Sc. Div. | ° | Mic. Div. | ° | |
| 20 | 21 | 0 | 25 12·65 | 522·8 | 49·2 | 702·8 | 49·0 | W |
| | 22 | 0 | 15·41 | 522·8 | 49·1 | 687·2 | 49·4 | H |
| | 23 | 0 | 18·70 | 520·4 | 49·3 | 680·9 | 49·8 | H |
| 21 | 0 | 0 | 21·39 | 525·3 | 49·6 | 684·6 | 50·4 | H |
| | 1 | 0 | 23·31 | 524·4 | 50·0 | 691·1 | 51·2 | H |
| | 2 | 0 | 22·42 | 527·4 | 50·4 | 687·5 | 51·9 | H |
| | 3 | 0 | 22·24 | 528·7 | 50·9 | 693·7 | 52·5 | H |
| | 4 | 0 | 22·10 | 528·7 | 51·3 | 699·3 | 53·0 | H |
| | 5 | 0 | 22·06 | 539·2 | 51·7 | 701·2 | 53·5 | H |
| | 6 | 0 | 20·85 | 544·5 | 52·1 | 705·0 | 53·9 | B |
| | 7 | 0 | 20·85 | 545·3 | 52·6 | 711·9 | 54·2 | B |
| | 8 | 0 | 21·81 | 548·4 | 53·0 | 715·5 | 54·5 | B |
| | 9 | 0 | 18·37 | 540·6 | 53·2 | 724·7 | 54·3 | B |
| | 10 | 0 | 18·67 | 534·4 | 53·2 | 717·1 | 53·8 | B |
| | 11 | 0 | 19·49 | 536·2 | 53·0 | 707·9 | 53·3 | W |
| | 12 | 0† | 02·59 | 525·3 | 52·8 | 673·5 | 52·7 | W |
| | 13 | 0† | 25 09·64 | 522·7 | 52·6 | 656·1 | 52·4 | W |
| | 14 | 0 | 12·02 | 526·5 | 52·2 | 666·7 | 51·9 | W |
| | 15 | 0 | 13·59 | 527·8 | 51·8 | 677·1 | 51·1 | W |
| | 16 | 0 | 15·41 | 525·9 | 51·4 | 687·3 | 50·4 | W |
| | 17 | 0 | 13·16 | 526·0 | 50·9 | 691·9 | 49·7 | W |
| | 18 | 0 | 13·77 | 525·2 | 50·6 | 699·1 | 49·5 | W |
| | 19 | 0 | 14·17 | 522·3 | 50·4 | 714·4 | 49·5 | B |
| | 20 | 0 | 13·52 | 522·6 | 50·3 | 708·4 | 49·8 | B |
| | 21 | 0 | 12·78 | 523·5 | 50·2 | 697·7 | 50·2 | H |
| | 22 | 0 | 13·39 | 522·4 | 50·2 | 696·7 | 50·6 | H |
| | 23 | 0 | 14·53 | 521·3 | 50·5 | 690·2 | 51·2 | H |
| 22 | 0 | 0 | 20·25 | 514·4 | 50·8 | 692·1 | 51·8 | H |
| | 1 | 0 | 22·44 | 513·8 | 51·0 | 695·1 | 52·3 | H |
| | 2 | 0 | 25·58 | 518·3 | 51·5 | 693·0 | 52·9 | H |
| | 3 | 0 | 25·49 | 533·6 | 52·1 | 693·2 | 53·5 | B |
| | 4 | 0 | 26·43 | 519·5 | 52·7 | 708·6 | 54·3 | B |
| | 5 | 0† | 25·70 | 550·1 | 53·3 | 692·3 | 55·0 | B |
| | 6 | 0† | 23·68 | 546·0 | 53·9 | 697·7 | 55·6 | B |
| | 7 | 0 | 21·56 | 552·2 | 54·6 | 703·0 | 56·0 | B |
| | 8 | 0 | 19·73 | 545·9 | 55·1 | 722·5 | 56·4 | D |
| | 9 | 0† | 08·29 | 538·7 | 55·7 | 743·8 | 56·8 | D |
| | 10 | 0† | 09·74 | 540·6 | 55·7 | 724·2 | 56·4 | D |
| | 11 | 0† | 14·67 | 525·9 | 55·8 | 705·1 | 56·0 | H |
| | 12 | 0† | 15·99 | 520·2 | 55·4 | 649·8 | 55·5 | H |
| | 13 | 0† | 25 01·09 | 522·0 | 55·0 | 445·8 | 54·9 | H |
| | 14 | 0† | 00·00 | 523·1 | 54·5 | 530·0 | 54·3 | H |
| | 15 | 0† | 15·04 | 514·5 | 54·0 | 622·8 | 53·4 | H |
| | 16 | 0† | 16·15 | 526·5 | 53·4 | 647·3 | 52·5 | H |
| | 17 | 0† | 27·58 | 487·1 | 52·9 | 574·3 | 51·2 | H |
| | 18 | 0† | 25·04 | 518·8 | 52·4 | 563·7 | 50·8 | H |
| | 19 | 0† | 15·92 | 513·7 | 52·1 | 627·5 | 50·5 | B |
| | 20 | 0 | 13·37 | 505·8 | 51·8 | 663·3 | 50·5 | B |
| | 21 | 0 | 17·46 | 505·8 | 51·6 | 669·0 | 50·7 | B |
| | 22 | 0 | 17·17 | 513·6 | 51·4 | 674·1 | 51·1 | B |
| | 23 | 0 | 21·17 | 506·4 | 51·6 | 677·3 | 51·9 | B |
| 23 | 0 | 0 | 22·50 | 515·3 | 51·9 | 691·5 | 52·9 | B |
| | 1 | 0 | 23·93 | 525·0 | 52·3 | 697·3 | 54·2 | H |
| | 2 | 0 | 26·38 | 523·7 | 53·1 | 696·9 | 55·4 | H |
| | 3 | 0 | 26·10 | 531·4 | 54·0 | 690·0 | 56·3 | B |
| | 4 | 0 | 20·25 | 543·3 | 54·9 | 700·9 | 57·2 | B |
| 23 | 5 | 0 | 25 21·77 | 537·4 | 55·8 | 713·2 | 58·1 | B |
| | 6 | 0 | 19·69 | 542·6 | 56·4 | 724·4 | 58·6 | H |
| | 7 | 0† | 19·44 | 550·6 | 57·0 | 725·2 | 58·6 | H |
| | 8 | 0† | 15·44 | 550·5 | 57·1 | 716·5 | 58·6 | H |
| | 9 | 0 | 16·89 | 534·6 | 57·2 | 710·6 | 58·1 | H |
| | 10 | 0 | 17·60 | 530·7 | 57·2 | 701·2 | 57·4 | H |
| | 11 | 0† | 15·54 | 531·8 | 56·8 | 698·0 | 56·6 | B |
| | 12 | 0† | 12·72 | 531·8 | 56·4 | 691·5 | 56·1 | B |
| | 13 | 0 | 25 13·50 | 521·9 | 56·0 | 706·3 | 55·6 | B |
| | 14 | 0 | 17·10 | 520·4 | 55·6 | 697·8 | 55·0 | B |
| | 15 | 0 | 17·37 | 522·4 | 55·1 | 700·2 | 54·5 | B |
| | 16 | 0 | 16·01 | 525·0 | 54·7 | 702·8 | 53·7 | B |
| | 17 | 0 | 14·01 | 524·2 | 54·3 | 711·1 | 53·0 | B |
| | 18 | 0 | 13·19 | 523·8 | 53·9 | 714·6 | 52·5 | B |
| | 19 | 0 | 12·23 | 524·1 | 53·4 | 711·0 | 52·2 | H |
| | 20 | 0 | 12·11 | 522·2 | 53·0 | 711·4 | 51·9 | H |
| | 21 | 0 | 15·34 | 512·8 | 52·8 | 715·4 | 51·9 | H |
| | 22 | 0 | 15·52 | 512·4 | 52·6 | 711·0 | 52·1 | H |
| | 23 | 0 | 19·02 | 513·2 | 52·6 | 709·1 | 52·4 | H |
| 24 | 0 | 0 | 19·64 | 515·5 | 52·7 | 698·7 | 52·7 | H |
| | 1 | 0 | 20·42 | 522·7 | 52·9 | 705·5 | 53·6 | H |
| | 2 | 0 | 18·97 | 524·4 | 53·3 | 714·4 | 54·5 | H |
| | 3 | 0 | 19·62 | 534·8 | 53·8 | 716·1 | 55·7 | H |
| | 4 | 0 | 20·79 | 534·1 | 54·5 | 718·4 | 56·5 | H |
| | 5 | 0† | 17·36 | 546·8 | 55·3 | 708·6 | 57·2 | H |
| | 6 | 0 | 18·13 | 551·4 | 56·1 | 721·6 | 58·0 | W |
| | 7 | 0 | 18·30 | 543·2 | 56·9 | 724·4 | 58·4 | B |
| | 8 | 0 | 17·49 | 541·6 | 57·5 | 731·9 | 58·7 | B |
| | 9 | 0 | 18·16 | 538·6 | 57·8 | 729·6 | 58·5 | B |
| | 10 | 0 | 19·48 | 534·0 | 57·9 | 694·1 | 58·1 | B |
| | 11 | 0 | 14·75 | 532·1 | 57·7 | 685·2 | 57·7 | B |
| | 12 | 0 | 16·97 | 524·3 | 57·3 | 686·2 | 57·3 | B |
| | 13 | 0 | 25 15·42 | 528·8 | 57·0 | 659·9 | 56·8 | B |
| | 14 | 0 | 14·73 | 521·2 | 56·7 | 667·4 | 56·3 | D |
| | 15 | 0 | 16·13 | 521·6 | 56·3 | 655·4 | 55·8 | D |
| | 16 | 0 | 16·53 | 524·5 | 56·1 | 665·1 | 55·6 | D |
| | 17 | 0 | 14·40 | 524·8 | 55·8 | 677·8 | 55·4 | D |
| | 18 | 0 | 13·56 | 522·6 | 55·5 | 693·7 | 55·0 | W |
| | 19 | 0 | 13·07 | 519·8 | 55·1 | 704·1 | 54·5 | W |
| | 20 | 0 | 12·90 | 516·7 | 54·8 | 708·8 | 54·2 | W |
| | 21 | 0 | 12·83 | 516·1 | 54·6 | 707·2 | 54·2 | H |
| | 22 | 0 | 14·98 | 516·2 | 54·5 | 699·2 | 54·0 | H |
| | 23 | 0 | 16·28 | 514·0 | 54·4 | 699·0 | 54·5 | H |
| 25 | 0 | 0 | 19·44 | 522·8 | 54·5 | 690·7 | 55·2 | H |
| | 1 | 0 | 21·37 | 529·6 | 54·8 | 689·0 | 56·0 | B |
| | 2 | 0 | 20·35 | 534·0 | 55·3 | 696·2 | 56·7 | B |
| | 3 | 0 | 21·84 | 534·8 | 55·8 | 701·6 | 57·5 | B |
| | 4 | 0 | 20·35 | 534·4 | 56·5 | 707·9 | 58·4 | D |
| | 5 | 0 | 19·89 | 536·0 | 57·1 | 712·1 | 58·9 | D |
| | 6 | 0 | 19·39 | 538·4 | 57·7 | 711·1 | 59·2 | H |
| | 7 | 0 | 18·84 | 540·8 | 58·0 | 705·3 | 59·2 | H |
| | 8 | 0 | 19·01 | 544·0 | 58·1 | 712·3 | 58·8 | W |
| | 9 | 0 | 04·82 | 549·1 | 57·9 | 714·7 | 58·0 | W |
| | 10 | 0 | 16·25 | 533·3 | 57·5 | 703·5 | 56·8 | W |
| | 11 | 0 | 17·60 | 530·6 | 56·9 | 696·1 | 55·8 | H |
| | 12 | 0 | 17·15 | 530·0 | 56·2 | 700·4 | 55·0 | H |

DECLINATION. Magnet untouched, April 5d—May 28d.

BIFILAR. Observed 2m after the Declination, $k$=0·000140. BALANCE. Observed 3m after the Declination, $k$=0·0000085.

† Extra Observations made.

| Göttingen Mean Time of Declination Obs. | Declination. | Bifilar. Corrected. | Bifilar. Thermometer. | Balance. Corrected. | Balance. Thermometer. | Observer's Initial. |
|---|---|---|---|---|---|---|
| d. h. m. | ° ′ | Sc. Div. | ° | Mic. Div. | ° | |
| 26 13 0 | 25 14·17 | 525·4 | 53·0 | 682·4 | 52·0 | B |
| 14 0 | 14·53 | 526·2 | 52·6 | 681·6 | 51·2 | B |
| 15 0 | 16·72 | 529·9 | 52·2 | 668·7 | 50·7 | B |
| 16 0 | 14·44 | 525·0 | 51·8 | 669·9 | 50·4 | B |
| 17 0 | 13·19 | 528·8 | 51·4 | 670·6 | 50·1 | B |
| 18 0 | 13·96 | 525·9 | 51·1 | 675·3 | 49·9 | B |
| 19 0 | 14·23 | 515·1 | 50·9 | 691·3 | 49·9 | H |
| 20 0 | 15·83 | 519·6 | 50·8 | 680·8 | 50·0 | H |
| 21 0 | 14·38 | 520·6 | 50·7 | 682·9 | 50·2 | W |
| 22 0 | 15·54 | 516·7 | 50·6 | 668·8 | 50·5 | H |
| 23 0 | 16·62 | 511·3 | 50·7 | 652·2 | 50·8 | W |
| 27 0 0 | 18·23 | 515·2 | 50·9 | 655·2 | 51·4 | H |
| 1 0 | 19·81 | 526·7 | 51·2 | 661·6 | 52·2 | H |
| 2 0 | 21·93 | 525·1 | 51·6 | 676·5 | 53·0 | H |
| 3 0 | 22·64 | 530·9 | 52·1 | 680·7 | 53·5 | H |
| 4 0 | 19·78 | 534·5 | 52·6 | 688·3 | 54·1 | H |
| 5 0 | 19·34 | 537·6 | 53·1 | 696·0 | 54·5 | W |
| 6 0 | 18·08 | 541·7 | 53·6 | 705·0 | 55·0 | B |
| 7 0 | 18·94 | 547·2 | 54·0 | 706·5 | 55·3 | B |
| 8 0† | 10·11 | 547·8 | 54·4 | 716·8 | 55·5 | B |
| 9 0 | 15·38 | 536·9 | 54·7 | 716·8 | 55·4 | B |
| 10 0 | 13·96 | 531·4 | 54·7 | 710·9 | 54·9 | B |
| 11 0 | 12·51 | 524·2 | 54·2 | 697·7 | 54·0 | W |
| 12 0 | 13·67 | 528·0 | 53·8 | 686·7 | 53·0 | W |
| 13 0 | 25 13·32 | 530·7 | 53·3 | 680·3 | 52·4 | W |
| 14 0 | 13·96 | 530·1 | 52·9 | 670·2 | 51·7 | W |
| 15 0 | 10·31 | 526·4 | 52·4 | 661·0 | 51·0 | W |
| 16 0 | 12·00 | 527·9 | 52·0 | 667·5 | 50·5 | W |
| 17 0 | 12·70 | 520·5 | 51·6 | 679·8 | 50·0 | W |
| 18 0 | 14·78 | 524·6 | 51·1 | 688·8 | 49·6 | W |
| 19 0 | 14·26 | 527·0 | 50·8 | 687·2 | 49·4 | B |
| 20 0 | 13·46 | 521·5 | 50·5 | 690·4 | 49·2 | B |
| 21 0 | 16·87 | 517·3 | 50·2 | 686·9 | 49·2 | H |
| 22 0 | 19·24 | 516·2 | 50·0 | 687·1 | 49·5 | H |
| 23 0 | 21·98 | 515·4 | 50·0 | 681·0 | 50·0 | H |
| 28 0 0 | 23·09 | 518·2 | 50·3 | 674·1 | 50·5 | B |
| 1 0 | 22·61 | 518·8 | 50·6 | 686·1 | 51·0 | B |
| 2 0 | 22·16 | 527·9 | 50·9 | 687·2 | 51·3 | H |
| 3 0 | 21·54 | 534·0 | 51·2 | 691·9 | 52·0 | H |
| 4 7 | 19·23 | 532·4 | 51·5 | 702·0 | 52·2 | W |
| 5 0 | 18·67 | 535·4 | 51·8 | 703·8 | 52·6 | H |
| 6 0 | 16·62 | 537·0 | 52·0 | 707·0 | 53·0 | W |
| 7 0 | 16·32 | 543·0 | 52·4 | 705·1 | 53·5 | W |
| 8 0 | 16·07 | 540·5 | 52·8 | 709·1 | 53·8 | W |
| 9 0† | 12·56 | 545·5 | 53·0 | 712·7 | 54·0 | W |
| 10 0 | 14·10 | 534·6 | 53·0 | 702·1 | 53·5 | W |
| 11 0 | 14·92 | 534·5 | 53·0 | 685·1 | 53·1 | H |
| 12 0 | 14·73 | 529·1 | 52·8 | 689·1 | 52·7 | H |
| 13 0 | 25 15·56 | 529·3 | 52·5 | 693·1 | 52·4 | H |
| 14 0 | 15·52 | 529·0 | 52·2 | 694·3 | 52·0 | H |
| 15 0 | 15·26 | 528·5 | 52·0 | 690·6 | 51·5 | H |
| 16 0 | 15·75 | 527·8 | 51·7 | 696·4 | 51·1 | H |
| 17 0 | 14·68 | 525·8 | 51·4 | 695·8 | 50·7 | H |
| 18 0 | 14·17 | 524·9 | 51·1 | 698·5 | 50·3 | H |
| 19 13 | 12·90 | 523·3 | 50·8 | 700·7 | 49·9 | W |
| 20 0 | 12·88 | 522·7 | 50·7 | 696·7 | 49·7 | W |

| Göttingen Mean Time of Declination Obs. | Declination. | Bifilar. Corrected. | Bifilar. Thermometer. | Balance. Corrected. | Balance. Thermometer. | Observer's Initial. |
|---|---|---|---|---|---|---|
| d. h. m. | ° ′ | Sc. Div. | ° | Mic. Div. | ° | |
| 28 21 0 | 25 13·20 | 519·2 | 50·5 | 697·8 | 49·7 | B |
| 22 0 | 13·05 | 516·0 | 50·3 | 692·2 | 49·8 | W |
| 23 0 | 16·75 | 515·2 | 50·2 | 697·6 | 50·0 | W |
| 29 0 0 | 19·31 | 519·2 | 50·3 | 686·9 | 50·4 | W |
| 1 0 | 21·97 | 524·2 | 50·6 | 673·9 | 50·9 | B |
| 2 0 | 22·95 | 529·4 | 50·9 | 682·7 | 51·6 | B |
| 3 0 | 21·75 | 527·2 | 51·3 | 685·8 | 52·3 | W |
| 4 0 | 20·12 | 529·9 | 51·7 | 690·4 | 52·9 | W |
| 5 0 | 19·16 | 531·3 | 52·1 | 696·7 | 53·3 | W |
| 6 0 | 17·92 | 535·3 | 52·4 | 696·5 | 53·4 | H |
| 7 0 | 16·52 | 537·0 | 52·5 | 698·3 | 53·4 | H |
| 8 0 | 15·93 | 540·7 | 52·6 | 700·4 | 53·2 | H |
| 9 0 | 11·47 | 541·5 | 52·5 | 707·9 | 52·8 | H |
| 10 0 | 13·83 | 533·4 | 52·3 | 705·5 | 52·5 | H |
| 11 0 | 12·78 | 530·1 | 52·2 | 700·5 | 52·1 | B |
| 12 0 | 15·01 | 531·2 | 52·0 | 694·3 | 51·8 | B |
| 13 0 | 25 14·21 | 530·8 | 51·8 | 690·3 | 51·5 | B |
| 14 0 | 13·03 | 531·0 | 51·6 | 686·4 | 51·1 | B |
| 15 0 | 12·11 | 529·0 | 51·3 | 685·5 | 50·7 | B |
| 16 0 | 12·78 | 525·3 | 51·0 | 689·1 | 50·3 | B |
| 17 0 | 11·98 | 524·5 | 50·8 | 695·0 | 50·0 | B |
| 18 0 | 12·01 | 523·4 | 50·6 | 695·1 | 49·7 | B |
| 19 10 | 12·82 | 521·3 | 50·3 | 690·9 | 49·6 | H |
| 20 0 | 16·66 | 517·8 | 50·1 | 692·5 | 49·6 | H |
| 21 0 | 16·16 | 513·9 | 50·0 | 692·3 | 49·8 | W |
| 22 0 | 15·39 | 518·5 | 50·0 | 681·5 | 50·0 | H |
| 23 0 | 15·64 | 519·3 | 50·1 | 685·4 | 50·6 | H |
| 30 0 0 | 18·50 | 518·5 | 50·4 | 680·6 | 51·2 | H |
| 1 0 | 20·16 | 525·5 | 50·7 | 685·1 | 51·7 | H |
| 2 0 | 21·46 | 527·3 | 51·0 | 691·3 | 52·2 | H |
| 3 0 | 20·85 | 531·3 | 51·5 | 693·8 | 52·9 | H |
| 4 0 | 20·05 | 531·9 | 52·0 | 700·2 | 53·5 | H |
| 5 0 | 18·32 | 535·7 | 52·4 | 701·4 | 53·9 | H |
| 6 0 | 18·40 | 536·9 | 52·7 | 694·7 | 53·9 | B |
| 7 0 | 18·05 | 537·9 | 52·9 | 689·6 | 54·1 | B |
| 8 0 | 16·99 | 537·1 | 53·1 | 696·8 | 54·4 | B |
| 9 0 | 16·26 | 535·8 | 53·3 | 699·1 | 54·3 | B |
| 10 0 | 16·08 | 533·5 | 53·3 | 700·9 | 54·0 | B |
| 11 0 | 15·52 | 531·1 | 53·1 | 699·7 | 53·5 | W |
| 12 0 | 15·51 | 532·3 | 53·0 | 696·2 | 53·0 | W |
| 13 0 | 25 15·62 | 531·7 | 52·8 | 696·2 | 52·7 | W |
| 14 0 | 15·67 | 531·1 | 52·5 | 697·3 | 52·3 | W |
| 15 0 | 15·51 | 529·8 | 52·2 | 697·0 | 51·8 | W |
| 16 0 | 14·87 | 527·6 | 51·9 | 699·6 | 51·4 | W |
| 17 0 | 14·46 | 526·6 | 51·7 | 701·5 | 51·0 | W |
| 18 0 | 12·56 | 524·6 | 51·5 | 701·9 | 50·6 | W |
| 19 0 | 11·75 | 523·7 | 51·2 | 701·1 | 50·4 | B |
| 20 0 | 12·53 | 524·3 | 51·0 | 697·9 | 50·2 | B |
| 21 5 | 12·42 | 520·3 | 50·8 | 703·7 | 50·2 | H |
| 22 0 | 14·77 | 519·8 | 50·7 | 704·0 | 50·4 | H |
| 23 0 | 16·77 | 520·3 | 50·7 | 693·8 | 50·6 | H |
| 31 0 0 | 19·86 | 524·1 | 50·8 | 684·9 | 51·0 | H |
| 1 0 | 22·20 | 530·3 | 50·9 | 687·6 | 51·6 | H |
| 2 0 | 23·07 | 535·5 | 51·3 | 693·8 | 52·2 | B |
| 3 0 | 23·41 | 538·2 | 51·8 | 693·1 | 52·8 | B |
| 4 0 | 22·31 | 538·8 | 52·2 | 691·8 | 53·5 | W |

DECLINATION. Torsion removed,—May 28d 0h, 0°—29d 23h, + 8½°. Effect of + 10° of Torsion = − 0′·84.
BIFILAR. Observed 2m after the Declination, $k$=0·000140. BALANCE. Observed 3m after the Declination, $k$=0·0000085.

† Extra Observations made.
May 27d 11h, *et seq.* The declination slightly disturbed.
May 28d 1h—29d 9h. The magnet with short scale used in the declinometer.
May 29d 9h + Deflecting bar vibrated in the declinometer box.

| Göttingen Mean Time of Declination Obs. | Declination. | Bifilar. Corrected. | Bifilar. Thermometer. | Balance. Corrected. | Balance. Thermometer. | Observer's Initial. |
|---|---|---|---|---|---|---|
| d. h. m. | ° ′ | Sc. Div. | ° | Mic. Div. | ° | |
| 31 5 0 | 25 20·50 | 539·6 | 52·7 | 694·2 | 54·0 | B |
| 6 0 | 18·58 | 539·3 | 53·0 | 694·5 | 54·2 | W |
| 7 0 | 18·08 | 544·8 | 53·1 | 692·5 | 54·2 | W |
| 8 0 | 17·44 | 542·8 | 53·2 | 703·2 | 54·0 | W |
| 9 0 | 16·60 | 536·0 | 53·1 | 710·2 | 53·7 | W |
| 10 0 | 17·46 | 536·6 | 53·0 | 710·4 | 53·4 | W |
| 11 0 | 15·44 | 534·2 | 52·9 | 702·2 | 53·1 | H |
| 12 0 | 15·58 | 536·7 | 52·7 | 699·3 | 52·8 | H |
| 13 0 | 25 15·05 | 535·6 | 52·5 | 696·4 | 52·5 | H |
| 14 0 | 14·85 | 533·7 | 52·3 | 693·4 | 52·2 | H |
| 15 0 | 13·36 | 533·7 | 52·1 | 692·5 | 51·9 | H |
| 16 0 | 13·46 | 533·5 | 52·0 | 695·9 | 51·5 | H |
| 17 0 | 12·60 | 531·3 | 51·8 | 700·6 | 51·1 | H |
| 18 0 | 12·23 | 526·3 | 51·4 | 699·9 | 50·7 | H |
| 19 0 | 13·14 | 524·0 | 51·1 | 695·0 | 50·4 | W |
| 20 0 | 12·85 | 520·5 | 50·9 | 694·4 | 50·2 | W |
| 21 0 | 13·57 | 517·3 | 50·8 | 699·1 | 50·2 | B |
| 22 0 | 14·68 | 518·6 | 50·7 | 685·0 | 50·4 | W |
| 23 0 | 16·89 | 518·1 | 50·8 | 678·6 | 51·0 | W |
| 1 0 0 | 20·06 | 521·1 | 51·0 | 673·9 | 52·0 | W |
| 1 0 | 23·48 | 528·6 | 51·7 | 668·8 | 53·0 | B |
| 2 0 | 25·47 | 534·3 | 52·4 | 675·9 | 54·2 | W |
| 3 0 | 22·64 | 540·8 | 53·3 | 679·6 | 55·4 | W |
| 4 0 | 19·44 | 541·0 | 54·2 | 683·3 | 56·5 | W |
| 5 0 | 17·29 | 539·8 | 55·0 | 688·0 | 57·1 | W |
| 6 0 | 16·60 | 544·0 | 55·7 | 689·9 | 57·6 | H |
| 7 0 | 16·59 | 537·5 | 56·2 | 697·1 | 57·9 | H |
| 8 0 | 17·63 | 539·7 | 56·5 | 689·2 | 57·5 | H |
| 9 0 | 17·47 | 541·2 | 56·3 | 686·9 | 57·0 | H |
| 10 0 | 18·03 | 543·3 | 56·0 | 688·7 | 56·3 | H |
| 11 0† | 11·15 | 541·1 | 55·7 | 688·6 | 55·7 | B |
| 12 0 | 12·75 | 540·1 | 55·4 | 689·4 | 55·5 | B |
| 2 13 0 | 25 16·38 | 529·5 | 52·8 | 698·3 | 51·7 | W |
| 14 0 | 15·98 | 529·8 | 52·4 | 705·8 | 51·4 | W |
| 15 0† | 13·83 | 529·5 | 52·0 | 710·9 | 51·0 | W |
| 16 0 | 17·49 | 524·2 | 51·8 | 710·0 | 50·7 | W |
| 17 0 | 15·99 | 530·6 | 51·6 | 694·3 | 50·4 | W |
| 18 0 | 12·96 | 528·4 | 51·3 | 701·7 | 50·3 | W |
| 19 0 | 13·76 | 526·7 | 51·2 | 709·1 | 50·5 | B |
| 20 0 | 13·46 | 525·2 | 51·1 | 710·0 | 50·7 | B |
| 21 0 | 12·75 | 521·0 | 51·1 | 708·6 | 51·3 | H |
| 22 0 | 12·78 | 519·9 | 51·3 | 701·2 | 51·9 | B |
| 23 0 | 14·37 | 517·2 | 51·8 | 701·9 | 52·9 | H |
| 3 0 0 | 17·67 | 516·3 | 52·3 | 694·0 | 53·9 | H |
| 1 0 | 21·56 | 519·2 | 53·0 | 698·0 | 55·1 | H |
| 2 0 | 21·86 | 531·9 | 53·9 | 694·0 | 56·3 | B |
| 3 0 | 22·42 | 534·0 | 54·9 | 698·8 | 57·8 | H |
| 4 0 | 21·09 | 541·1 | 56·2 | 701·0 | 59·4 | W |
| 5 0 | 19·28 | 537·6 | 57·6 | 715·4 | 60·7 | B |
| 6 0 | 18·10 | 541·3 | 58·7 | 715·2 | 61·5 | W |
| 7 0 | 17·56 | 535·6 | 59·3 | 713·8 | 61·8 | W |
| 8 0 | 17·06 | 539·0 | 59·7 | 708·9 | 61·8 | W |
| 9 0 | 16·68 | 535·3 | 59·9 | 711·9 | 61·8 | W |
| 10 0 | 16·01 | 534·9 | 59·9 | 703·9 | 61·0 | W |
| 11 0 | 16·05 | 534·2 | 59·6 | 699·2 | 60·3 | H |
| 12 0 | 15·78 | 533·3 | 59·2 | 698·7 | 59·7 | H |

| Göttingen Mean Time of Declination Obs. | Declination. | Bifilar. Corrected. | Bifilar. Thermometer. | Balance. Corrected. | Balance. Thermometer. | Observer's Initial. |
|---|---|---|---|---|---|---|
| d. h. m. | ° ′ | Sc. Div. | ° | Mic. Div. | ° | |
| 3 13 0 | 25 15·91 | 534·5 | 58·8 | 694·5 | 58·8 | H |
| 14 0 | 15·69 | 531·6 | 58·3 | 696·5 | 58·0 | H |
| 15 0 | 15·67 | 530·4 | 57·8 | 700·8 | 57·2 | H |
| 16 0 | 14·80 | 529·4 | 57·2 | 706·1 | 56·2 | H |
| 17 0 | 14·11 | 529·3 | 56·6 | 709·7 | 55·4 | H |
| 18 0 | 13·69 | 529·0 | 56·1 | 711·0 | 54·7 | H |
| 19 0 | 13·86 | 529·3 | 55·5 | 709·6 | 54·2 | W |
| 20 0 | 14·58 | 528·4 | 55·0 | 708·7 | 54·0 | W |
| 21 0 | 14·23 | 523·1 | 54·8 | 709·9 | 54·0 | B |
| 22 0 | 15·54 | 520·4 | 54·6 | 688·1 | 54·0 | W |
| 23 0 | 14·94 | 521·7 | 54·6 | 678·2 | 54·5 | W |
| 4 0 0 | 17·67 | 523·9 | 54·7 | 684·3 | 55·0 | W |
| 1 0 | 20·16 | 530·0 | 55·0 | 690·7 | 56·2 | H |
| 2 0 | 21·76 | 336·1 | 55·8 | 690·6 | 57·4 | W |
| 3 0 | 21·06 | 533·2 | 56·8 | 694·1 | 58·8 | W |
| 4 0 | 22·10 | 534·1 | 57·8 | 696·9 | 59·9 | W |
| 5 0 | 19·91 | 537·3 | 58·6 | 699·5 | 60·5 | W |
| 6 0 | 19·02 | 537·1 | 59·0 | 702·9 | 60·7 | W |
| 7 0 | 17·67 | 538·4 | 59·3 | 706·0 | 60·7 | W |
| 8 0 | 17·54 | 538·3 | 59·3 | 702·5 | 60·6 | H |
| 9 0 | 17·49 | 539·0 | 59·4 | 702·1 | 60·4 | H |
| 10 0 | 15·52 | 533·4 | 59·4 | 703·9 | 60·0 | H |
| 11 0 | 15·81 | 532·3 | 59·3 | 699·6 | 59·6 | B |
| 12 0 | 16·38 | 532·6 | 59·0 | 695·8 | 59·2 | B |
| 13 0 | 25 16·41 | 532·1 | 58·8 | 694·2 | 58·8 | B |
| 14 0 | 16·21 | 531·4 | 58·5 | 696·2 | 58·4 | B |
| 15 0 | 16·18 | 530·7 | 58·2 | 699·8 | 58·0 | B |
| 16 0 | 15·58 | 529·6 | 57·9 | 705·7 | 57·6 | B |
| 17 0 | 14·62 | 530·0 | 57·7 | 708·3 | 57·3 | B |
| 18 0 | 12·38 | 530·0 | 57·5 | 709·8 | 57·0 | B |
| 19 0 | 11·95 | 528·3 | 57·2 | 709·1 | 56·9 | H |
| 20 0 | 12·11 | 527·6 | 57·0 | 710·6 | 56·8 | H |
| 21 0 | 13·43 | 521·0 | 56·9 | 714·7 | 56·8 | W |
| 22 0 | 13·43 | 516·8 | 56·9 | 707·3 | 56·9 | H |
| 23 0 | 15·85 | 513·6 | 56·8 | 700·9 | 57·1 | H |
| 5 0 0 | 18·99 | 518·2 | 56·9 | 695·9 | 57·4 | H |
| 1 0 | 21·93 | 520·6 | 57·0 | 698·3 | 57·9 | H |
| 2 0 | 23·02 | 527·5 | 57·3 | 691·8 | 58·4 | H |
| 3 0 | 23·88 | 532·6 | 57·7 | 700·0 | 58·9 | H |
| 4 0 | 22·71 | 537·6 | 58·0 | 706·0 | 59·2 | H |
| 5 0 | 20·18 | 543·4 | 58·4 | 705·4 | 59·5 | W |
| 6 0 | 18·03 | 541·5 | 58·8 | 702·6 | 59·7 | B |
| 7 0 | 16·82 | 541·3 | 59·0 | 704·3 | 59·9 | B |
| 8 0 | 16·90 | 537·7 | 59·2 | 706·2 | 60·0 | B |
| 9 0 | 16·75 | 535·2 | 59·3 | 703·4 | 60·0 | B |
| 10 0 | 16·15 | 536·1 | 59·3 | 702·1 | 60·0 | B |
| 11 0 | 16·30 | 537·5 | 59·3 | 700·0 | 59·9 | W |
| 12 0 | 16·28 | 533·4 | 59·2 | 698·9 | 59·7 | W |
| 13 0 | 25 16·46 | 531·0 | 59·1 | 698·5 | 59·5 | W |
| 14 0 | 16·16 | 530·7 | 59·0 | 698·6 | 59·3 | W |
| 15 0 | 16·06 | 531·0 | 58·9 | 697·8 | 59·0 | W |
| 16 0 | 14·82 | 530·9 | 58·7 | 701·3 | 58·7 | W |
| 17 0 | 13·77 | 531·2 | 58·5 | 704·2 | 58·5 | W |
| 18 0 | 11·95 | 528·5 | 58·3 | 705·7 | 58·3 | W |
| 19 0 | 11·19 | 529·7 | 58·2 | 701·9 | 58·2 | B |
| 20 0 | 11·17 | 528·8 | 58·1 | 703·2 | 58·2 | B |

DECLINATION. Magnet untouched, May 29d—Aug. 4d.

BIFILAR. Observed 2m after the Declination, $k = 0{\cdot}000140$. BALANCE. Observed 3m after the Declination $k = 0{\cdot}0000085$.

† Extra Observations made.

| Göttingen Mean Time of Declination Obs. | | | Declination. | Bifilar. Corrected. | Bifilar. Thermometer. | Balance. Corrected. | Balance. Thermometer. | Observer's Initial. |
|---|---|---|---|---|---|---|---|---|
| d. | h. | m. | ° ′ | Sc. Div. | ° | Mic. Div. | ° | |
| 5 | 21 | 0 | 25 10·87 | 525·6 | 58·1 | 704·9 | 58·4 | H |
| | 22 | 0 | 14·43 | 519·4 | 58·1 | 706·0 | 58·6 | B |
| | 23 | 0 | 16·95 | 517·7 | 58·4 | 704·0 | 59·5 | H |
| 6 | 0 | 0 | 20·29 | 521·5 | 59·0 | 695·7 | 60·5 | B |
| | 1 | 0 | 22·62 | 522·4 | 59·7 | 687·1 | 61·8 | H |
| | 2 | 0 | 23·36 | 528·3 | 60·4 | 668·5 | 63·0 | H |
| | 3 | 0 | 22·78 | 530·6 | 61·4 | 670·2 | 63·7 | B |
| | 4 | 0 | 20·82 | 533·9 | 62·1 | 681·6 | 64·5 | H |
| | 5 | 0 | 19·44 | 533·4 | 62·8 | 698·5 | 65·2 | H |
| | 6 | 0 | 17·83 | 541·6 | 63·6 | 707·3 | 65·9 | W |
| | 7 | 2 | 16·93 | 543·4 | 64·2 | 709·0 | 66·5 | W |
| | 8 | 0 | 16·93 | 541·3 | 64·8 | 708·6 | 66·8 | W |
| | 9 | 0 | 17·65 | 539·9 | 65·2 | 705·6 | 66·9 | W |
| | 10 | 0 | 17·13 | 536·9 | 65·4 | 700·7 | 66·4 | W |
| | 11 | 0 | 17·06 | 534·4 | 65·2 | 695·3 | 65·8 | H |
| | 12 | 0 | 16·60 | 534·5 | 64·9 | 692·3 | 65·3 | H |
| | 13 | 0 | 25 16·18 | 532·1 | 64·5 | 689·5 | 64·8 | H |
| | 14 | 0 | 15·49 | 531·6 | 64·2 | 688·7 | 64·2 | H |
| | 15 | 0 | 15·58 | 532·8 | 63·8 | 689·1 | 63·7 | H |
| | 16 | 0 | 15·38 | 533·5 | 63·4 | 689·1 | 63·2 | H |
| | 17 | 0 | 13·74 | 532·6 | 63·1 | 691·1 | 62·6 | H |
| | 18 | 0 | 12·78 | 533·5 | 62·8 | 695·5 | 62·2 | H |
| | 19 | 0 | 12·04 | 530·8 | 62·5 | 700·3 | 61·8 | W |
| | 20 | 0 | 11·21 | 526·0 | 62·2 | 707·4 | 61·5 | W |
| | 21 | 0 | 11·66 | 521·6 | 62·0 | 702·3 | 61·8 | B |
| | 22 | 0 | 12·98 | 519·9 | 62·0 | 691·9 | 61·8 | W |
| | 23 | 0 | 15·52 | 518·4 | 61·9 | 680·6 | 61·9 | W |
| 7 | 0 | 0 | 20·79 | 519·1 | 61·9 | 681·8 | 62·2 | W |
| | 1 | 0 | 24·01 | 522·5 | 62·0 | 688·6 | 62·5 | W |
| | 2 | 0 | 24·20 | 528·3 | 62·3 | 687·8 | 62·9 | W |
| | 3 | 0 | 23·11 | 534·5 | 62·7 | 692·7 | 63·3 | W |
| | 4 | 0 | 20·38 | 534·7 | 62·8 | 703·3 | 63·5 | W |
| | 5 | 0 | 18·81 | 540·3 | 62·9 | 718·1 | 63·4 | W |
| | 6 | 0 | 18·74 | 539·2 | 62·8 | 716·9 | 63·2 | H |
| | 7 | 0 | 18·70 | 538·3 | 62·8 | 714·0 | 62·9 | W |
| | 8 | 0 | 18·38 | 538·6 | 62·6 | 710·8 | 62·6 | W |
| | 9 | 0 | 18·14 | 538·4 | 62·4 | 709·5 | 62·3 | H |
| | 10 | 0 | 16·90 | 533·8 | 62·2 | 711·9 | 62·0 | H |
| | 11 | 0 | 16·90 | 532·8 | 62·0 | 702·8 | 61·6 | B |
| | 12 | 0 | 16·53 | 530·1 | 61·8 | 703·1 | 61·2 | B |
| | 13 | 0 | 25 16·48 | 529·6 | 61·5 | 703·6 | 61·0 | B |
| | 14 | 15 | 16·12 | 529·8 | 61·2 | 699·8 | 60·7 | B |
| | 15 | 0 | 14·78 | 527·9 | 61·0 | 700·0 | 60·5 | B |
| | 16 | 0 | 14·77 | 529·2 | 60·9 | 703·0 | 60·2 | B |
| | 17 | 0 | 13·41 | 527·6 | 60·7 | 702·8 | 59·9 | B |
| | 18 | 0 | 11·44 | 526·4 | 60·4 | 702·8 | 59·6 | B |
| | 19 | 0 | 10·28 | 523·2 | 60·1 | 705·0 | 59·6 | H |
| | 20 | 0 | 11·12 | 520·3 | 60·0 | 706·9 | 59·6 | H |
| | 21 | 0 | 12·92 | 517·4 | 59·9 | 703·0 | 59·5 | W |
| | 22 | 0 | 12·67 | 516·1 | 59·9 | 689·0 | 59·8 | H |
| | 23 | 0 | 15·24 | 512·8 | 59·9 | 686·1 | 60·2 | H |
| 8 | 0 | 0 | 17·61 | 514·2 | 60·1 | 680·2 | 60·9 | H |
| | 1 | 0 | 19·81 | 520·1 | 60·5 | 678·9 | 62·0 | H |
| | 2 | 0 | 21·43 | 522·2 | 61·2 | 677·7 | 63·0 | H |
| | 3 | 0 | 21·93 | 532·0 | 62·0 | 677·1 | 64·2 | H |
| | 4 | 0 | 21·24 | 537·1 | 62·9 | 681·1 | 65·0 | H |

| Göttingen Mean Time of Declination Obs. | | | Declination. | Bifilar. Corrected. | Bifilar. Thermometer. | Balance. Corrected. | Balance. Thermometer. | Observer's Initial. |
|---|---|---|---|---|---|---|---|---|
| d. | h. | m. | ° ′ | Sc. Div. | ° | Mic. Div. | ° | |
| 8 | 5 | 0 | 25 19·51 | 537·2 | 63·6 | 685·7 | 65·6 | H |
| | 6 | 0 | 16·89 | 538·0 | 64·3 | 680·5 | 66·0 | B |
| | 7 | 0 | 16·80 | 541·1 | 64·7 | 681·4 | 66·1 | B |
| | 8 | 0 | 17·36 | 540·8 | 64·9 | 689·3 | 65·6 | B |
| | 9 | 0 | 17·39 | 540·9 | 64·8 | 691·1 | 65·0 | B |
| | 10 | 0 | 16·95 | 535·5 | 64·4 | 692·5 | 64·4 | B |
| | 11 | 0 | 13·46 | 535·7 | 64·0 | 691·0 | 64·0 | W |
| | 12 | 0 | 15·15 | 533·7 | 63·7 | 689·4 | 63·5 | W |
| 9 | 13 | 0 | 25 14·68 | 530·6 | 63·3 | 675·9 | 62·7 | H |
| | 14 | 0 | 15·71 | 533·1 | 63·0 | 675·0 | 62·2 | H |
| | 15 | 0 | 16·19 | 528·3 | 62·7 | 678·5 | 61·6 | H |
| | 16 | 0 | 15·25 | 528·1 | 62·3 | 679·2 | 61·0 | H |
| | 17 | 0 | 12·15 | 528·5 | 61·8 | 687·1 | 60·4 | H |
| | 18 | 0 | 10·95 | 529·8 | 61·3 | 699·3 | 59·9 | H |
| | 19 | 0 | 10·30 | 527·8 | 61·0 | 706·9 | 59·7 | W |
| | 20 | 0 | 13·93 | 526·4 | 60·7 | 698·0 | 59·5 | W |
| | 21 | 5 | 13·09 | 522·7 | 60·4 | 694·9 | 59·7 | B |
| | 22 | 0 | 14·87 | 518·5 | 60·2 | 699·8 | 59·9 | W |
| | 23 | 0 | 17·26 | 518·0 | 60·2 | 681·3 | 60·1 | W |
| 10 | 0 | 0 | 21·63 | 515·8 | 60·4 | 678·6 | 60·7 | W |
| | 1 | 0 | 21·34 | 526·0 | 60·7 | 668·0 | 61·2 | W |
| | 2 | 0 | 20·74 | 531·9 | 60·9 | 670·7 | 61·6 | W |
| | 3 | 0 | 21·09 | 535·5 | 61·1 | 672·0 | 62·0 | W |
| | 4 | 0 | 20·90 | 536·2 | 61·4 | 686·9 | 62·4 | W |
| | 5 | 0 | 19·55 | 544·3 | 61·7 | 694·4 | 62·8 | W |
| | 6 | 0 | 17·53 | 546·4 | 62·0 | 696·8 | 63·2 | H |
| | 7 | 0 | 16·19 | 543·5 | 62·3 | 698·9 | 63·4 | H |
| | 8 | 0 | 17·27 | 544·1 | 62·4 | 692·7 | 63·2 | H |
| | 9 | 0 | 16·89 | 538·7 | 62·4 | 698·9 | 63·2 | H |
| | 10 | 0 | 17·36 | 540·5 | 62·4 | 691·8 | 62·5 | H |
| | 11 | 6 | 14·41 | 534·7 | 62·0 | 669·4 | 61·3 | B |
| | 12 | 0 | 15·05 | 533·2 | 61·5 | 672·9 | 60·5 | B |
| | 13 | 0 | 25 16·21 | 532·3 | 60·9 | 676·0 | 59·5 | B |
| | 14 | 0† | 16·10 | 529·1 | 60·3 | 662·4 | 58·5 | B |
| | 15 | 0 | 17·10 | 526·6 | 59·7 | 628·4 | 58·0 | B |
| | 16 | 0 | 12·15 | 526·8 | 59·1 | 656·0 | 57·0 | B |
| | 17 | 0 | 12·02 | 526·7 | 58·5 | 680·8 | 56·5 | B |
| | 18 | 0 | 11·55 | 524·7 | 58·0 | 691·1 | 56·2 | B |
| | 19 | 0 | 12·43 | 527·3 | 57·8 | 697·4 | 56·3 | H |
| | 20 | 0 | 11·03 | 521·8 | 57·5 | 702·8 | 56·4 | H |
| | 21 | 0 | 13·64 | 513·7 | 57·4 | 707·0 | 56·5 | W |
| | 22 | 0 | 17·81 | 513·5 | 57·3 | 709·8 | 57·0 | H |
| | 23 | 0 | 17·74 | 519·3 | 57·3 | 703·7 | 57·5 | H |
| 11 | 0 | 0 | 21·51 | 523·9 | 57·6 | 698·7 | 58·5 | H |
| | 1 | 0 | 21·79 | 527·4 | 58·1 | 693·0 | 59·6 | H |
| | 2 | 0 | 21·81 | 530·4 | 58·9 | 686·1 | 61·0 | H |
| | 3 | 0 | 21·23 | 534·0 | 59·8 | 681·3 | 62·0 | B |
| | 4 | 0 | 20·33 | 537·2 | 60·7 | 683·3 | 62·7 | B |
| | 5 | 0 | 18·16 | 542·2 | 61·3 | 696·1 | 63·5 | H |
| | 6 | 0 | 16·65 | 533·0 | 61·9 | 701·8 | 63·5 | B |
| | 7 | 0 | 16·70 | 539·7 | 62·1 | 706·3 | 63·5 | B |
| | 8 | 0 | 16·82 | 541·8 | 62·2 | 700·1 | 63·1 | B |
| | 9 | 0 | 16·95 | 536·9 | 62·1 | 699·9 | 62·7 | B |
| | 10 | 0 | 16·60 | 533·7 | 61·9 | 698·1 | 62·2 | B |
| | 11 | 0 | 16·15 | 534·8 | 61·6 | 694·2 | 61·8 | W |
| | 12 | 0 | 13·99 | 532·8 | 61·3 | 688·9 | 61·3 | W |

DECLINATION. Magnet untouched, May 29d—Aug. 4d.

BIFILAR. Observed 2m after the Declination $k = 0{\cdot}000140$. BALANCE. Observed 3m after the Declination, $k = 0{\cdot}0000085$.

† Extra Observations made.

| Göttingen Mean Time of Declination Obs. | Declination. | Bifilar. Corrected. | Bifilar. Thermometer. | Balance. Corrected. | Balance. Thermometer. | Observer's Initial. |
|---|---|---|---|---|---|---|
| d. h. m. | ° ′ | Sc. Div. | ° | Mic. Div. | ° | |
| 11 13 0 | 25 15·94 | 531·3 | 61·0 | 698·2 | 60·8 | W |
| 14 0 | 16·72 | 532·9 | 60·7 | 691·0 | 60·4 | W |
| 15 0 | 15·44 | 529·3 | 60·4 | 691·1 | 60·0 | W |
| 16 0 | 17·37 | 531·2 | 60·0 | 687·8 | 59·5 | W |
| 17 0 | 16·25 | 531·7 | 59·9 | 684·4 | 59·4 | W |
| 18 0 | 13·90 | 533·5 | 59·7 | 684·4 | 59·5 | W |
| 19 0 | 12·08 | 528·6 | 59·7 | 695·2 | 59·5 | B |
| 20 0 | 11·34 | 524·8 | 59·6 | 690·6 | 59·5 | B |
| 21 0 | 12·87 | 521·0 | 59·5 | 699·9 | 59·5 | H |
| 22 0 | 13·90 | 522·3 | 59·4 | 690·0 | 59·7 | H |
| 23 0 | 16·77 | 524·9 | 59·5 | 681·5 | 60·2 | H |
| 12 0 0 | 20·85 | 525·2 | 59·8 | 672·0 | 61·2 | H |
| 1 0 | 22·72 | 529·9 | 60·2 | 676·4 | 62·5 | H |
| 2 0 | 22·87 | 532·0 | 61·2 | 684·9 | 63·9 | H |
| 3 0 | 22·42 | 533·8 | 62·2 | 689·7 | 64·9 | H |
| 4 0 | 21·56 | 536·8 | 63·0 | 684·9 | 65·3 | H |
| 5 0 | 19·68 | 536·4 | 63·5 | 691·2 | 65·2 | B |
| 6 0 | 17·53 | 541·4 | 63·7 | 693·1 | 65·0 | W |
| 7 0 | 15·44 | 537·5 | 63·7 | 698·2 | 64·6 | W |
| 8 0 | 16·62 | 541·8 | 63·6 | 698·7 | 64·2 | W |
| 9 0 | 17·31 | 537·1 | 63·3 | 693·6 | 63·8 | W |
| 10 0 | 17·17 | 538·7 | 63·0 | 690·9 | 63·4 | W |
| 11 0 | 16·62 | 535·9 | 62·7 | 688·4 | 63·0 | H |
| 12 0 | 16·30 | 535·4 | 62·4 | 687·6 | 62·6 | H |
| 13 0 | 25 16·95 | 534·7 | 62·2 | 688·5 | 62·2 | H |
| 14 0 | 16·73 | 531·7 | 62·0 | 690·4 | 61·8 | H |
| 15 0 | 18·95 | 533·8 | 61·6 | 686·2 | 61·4 | H |
| 16 0 | 16·32 | 532·2 | 61·3 | 682·9 | 61·0 | H |
| 17 0 | 15·52 | 530·5 | 61·0 | 677·1 | 60·6 | H |
| 18 0 | 12·78 | 535·1 | 60·8 | 661·2 | 60·3 | H |
| 19 0 | 11·95 | 533·3 | 60·6 | 664·9 | 60·0 | W |
| 20 0 | 13·32 | 530·9 | 60·4 | 671·1 | 60·2 | W |
| 21 0 | 14·03 | 524·3 | 60·5 | 670·9 | 60·8 | B |
| 22 0 | 16·80 | 522·4 | 60·7 | 672·7 | 61·4 | W |
| 23 0 | 18·97 | 527·1 | 61·1 | 669·0 | 62·2 | W |
| 13 0 0 | 22·00 | 530·2 | 61·7 | 664·1 | 62·9 | W |
| 1 0 | 23·22 | 540·3 | 62·2 | 668·7 | 63·5 | B |
| 2 0 | 25·51 | 536·1 | 62·7 | 679·1 | 64·0 | W |
| 3 0 | 22·30 | 541·8 | 63·1 | 670·7 | 64·7 | W |
| 4 0 | 21·32 | 538·6 | 63·6 | 684·4 | 65·3 | W |
| 5 0 | 18·72 | 543·0 | 64·0 | 689·1 | 65·5 | W |
| 6 0 | 17·70 | 538·5 | 64·2 | 692·4 | 65·7 | H |
| 7 0 | 16·36 | 541·1 | 64·4 | 687·1 | 65·9 | H |
| 8 0 | 16·15 | 541·3 | 64·6 | 685·7 | 65·8 | H |
| 9 0 | 16·86 | 539·6 | 64·8 | 693·0 | 65·7 | H |
| 10 0 | 15·92 | 540·1 | 64·4 | 686·7 | 64·6 | H |
| 11 0† | 12·70 | 537·4 | 64·0 | 682·2 | 63·5 | B |
| 12 0 | 14·94 | 534·3 | 63·5 | 681·7 | 62·8 | B |
| 13 0 | 25 14·77 | 533·4 | 63·0 | 677·3 | 62·0 | B |
| 14 0 | 14·77 | 533·3 | 62·5 | 672·2 | 61·2 | B |
| 15 0 | 12·72 | 530·6 | 62·0 | 671·6 | 60·5 | B |
| 16 0 | 13·63 | 528·8 | 61·5 | 693·6 | 60·0 | B |
| 17 0 | 13·50 | 528·1 | 61·0 | 688·7 | 59·5 | B |
| 18 0 | 11·51 | 524·8 | 60·6 | 693·5 | 59·1 | B |
| 19 0 | 12·98 | 524·5 | 60·3 | 691·2 | 59·1 | H |
| 20 0 | 12·80 | 523·6 | 60·0 | 692·2 | 59·1 | H |

| Göttingen Mean Time of Declination Obs. | Declination. | Bifilar. Corrected. | Bifilar. Thermometer. | Balance. Corrected. | Balance. Thermometer. | Observer's Initial. |
|---|---|---|---|---|---|---|
| d. h. m. | ° ′ | Sc. Div. | ° | Mic. Div. | ° | |
| 13 21 0 | 25 13·99 | 523·5 | 59·9 | 701·4 | 59·0 | W |
| 22 0 | 15·89 | 522·0 | 59·8 | 703·8 | 59·3 | H |
| 23 0 | 18·35 | 522·5 | 59·8 | 690·2 | 59·6 | H |
| 14 0 5 | 23·48 | 534·0 | 59·8 | 685·4 | 60·0 | H |
| 1 0 | 23·41 | 533·3 | 60·0 | 672·9 | 60·5 | H |
| 2 0 | 23·99 | 534·4 | 60·2 | 676·9 | 61·2 | H |
| 3 0 | 23·38 | 536·0 | 60·6 | 692·0 | 61·9 | H |
| 4 0 | 20·29 | 534·3 | 61·0 | 698·9 | 62·4 | H |
| 5 0 | 17·84 | 535·4 | 61·4 | 701·7 | 62·6 | H |
| 6 0 | 17·15 | 538·2 | 61·8 | 702·4 | 62·6 | W |
| 7 0 | 16·75 | 536·6 | 61·8 | 698·7 | 62·4 | H |
| 8 0 | 16·57 | 539·5 | 61·6 | 692·9 | 62·0 | H |
| 9 0 | 16·05 | 539·0 | 61·3 | 688·4 | 61·3 | H |
| 10 0 | 16·15 | 536·3 | 61·0 | 687·7 | 60·6 | H |
| 11 0 | 16·35 | 535·0 | 60·6 | 685·6 | 59·9 | W |
| 12 0 | 16·30 | 532·3 | 60·1 | 687·1 | 59·2 | W |
| 13 0 | 25 16·35 | 532·5 | 59·7 | 689·7 | 58·7 | W |
| 14 0 | 16·21 | 530·1 | 59·2 | 694·9 | 58·2 | W |
| 15 0 | 15·74 | 529·9 | 58·8 | 696·6 | 57·7 | W |
| 16 0 | ..... | ..... | ..... | ..... | ..... | W |
| 17 0 | 13·57 | 529·9 | 58·0 | 693·0 | 56·8 | W |
| 18 0 | 13·36 | 532·1 | 57·8 | 706·0 | 56·9 | W |
| 19 0 | 11·68 | 529·9 | 57·8 | 709·6 | 56·9 | B |
| 20 0 | 12·33 | 528·5 | 57·7 | 719·4 | 57·0 | B |
| 21 0 | 14·23 | 524·7 | 57·5 | 713·2 | 57·3 | H |
| 22 0 | 15·83 | 521·0 | 57·5 | 695·1 | 57·6 | H |
| 23 0 | 16·70 | 516·9 | 57·6 | 696·8 | 58·0 | H |
| 15 0 0 | 19·01 | 515·4 | 57·7 | 683·4 | 58·2 | H |
| 1 0 | 20·94 | 520·2 | 57·8 | 691·9 | 58·3 | H |
| 2 0 | 22·24 | 525·1 | 57·8 | 697·7 | 58·3 | H |
| 3 0 | 21·68 | 532·0 | 57·9 | 700·8 | 58·4 | H |
| 4 0 | 20·45 | 536·4 | 58·0 | 707·3 | 58·5 | W |
| 5 0 | 18·43 | 536·9 | 58·1 | 711·6 | 58·8 | B |
| 6 0 | 17·20 | 541·4 | 58·3 | 710·6 | 59·1 | W |
| 7 0 | 16·60 | 544·0 | 58·6 | 710·4 | 59·5 | W |
| 8 0 | 16·82 | 543·2 | 58·8 | 703·5 | 59·5 | W |
| 9 0 | 17·00 | 541·8 | 58·9 | 709·1 | 59·5 | W |
| 10 0 | 16·92 | 536·2 | 58·8 | 706·8 | 59·3 | W |
| 11 0 | 16·82 | 536·6 | 58·5 | 696·8 | 58·6 | H |
| 12 0 | 16·66 | 534·6 | 58·3 | 695·2 | 58·0 | B |
| 16 13 0† | 25 24·30 | 540·9 | 60·6 | 639·1 | 60·0 | B |
| 14 0† | 06·34 | 523·9 | 59·9 | 588·7 | 59·2 | B |
| 15 0† | 09·56 | 536·3 | 59·3 | 637·8 | 58·5 | B |
| 16 0 | 10·09 | 532·3 | 58·8 | 674·3 | 57·5 | B |
| 17 0† | 09·89 | 521·6 | 58·2 | 677·1 | 56·6 | B |
| 18 0† | 17·27 | 527·4 | 57·7 | 678·3 | 56·0 | B |
| 19 0† | 12·60 | 521·8 | 57·2 | 674·4 | 55·7 | H |
| 20 0† | 13·17 | 528·5 | 56·8 | 675·7 | 55·6 | H |
| 21 0 | 15·54 | 519·4 | 56·6 | 682·4 | 55·8 | W |
| 22 0 | 11·82 | 522·4 | 56·3 | 677·8 | 56·5 | H |
| 23 0 | 17·44 | 522·7 | 56·6 | 674·2 | 57·3 | H |
| 17 0 0 | 21·46 | 526·1 | 57·0 | 669·1 | 57·9 | H |
| 1 0 | 21·86 | 521·8 | 57·4 | 673·8 | 58·5 | H |
| 2 0 | 22·25 | 532·6 | 57·8 | 671·2 | 59·0 | H |
| 3 0 | 21·66 | 530·3 | 58·1 | 680·2 | 59·3 | H |
| 4 0 | 21·86 | 540·1 | 58·5 | 692·4 | 59·6 | H |

DECLINATION. Magnet untouched, May 29d—Aug. 4d.

BIFILAR. Observed 2m after the Declination, $k=0{\cdot}000140$. BALANCE. Observed 3m after the Declination, $k=0{\cdot}0000085$.

† Extra Observations made.

| Göttingen Mean Time of Declination Obs. | Declination. | Bifilar. | | Balance. | | Observer's Initial. |
|---|---|---|---|---|---|---|
| | | Corrected. | Thermometer. | Corrected. | Thermometer. | |
| d. h. m. | ° ′ | Sc. Div. | ° | Mic. Div. | ° | |
| 17 5 0 | 25 19·73 | 530·2 | 58·8 | 706·8 | 59·9 | H |
| 6 0 | 18·54 | 544·4 | 58·9 | 702·6 | 59·8 | B |
| 7 0 | 17·36 | 550·4 | 59·0 | 700·8 | 59·7 | B |
| 8 0 | 12·35 | 545·6 | 59·0 | 697·9 | 59·3 | B |
| 9 0 | 15·17 | 537·8 | 58·9 | 702·1 | 59·0 | B |
| 10 0 | 16·53 | 535·1 | 58·7 | 696·2 | 58·6 | B |
| 11 0 | 17·49 | 536·3 | 58·4 | 686·9 | 58·2 | W |
| 12 0 | 14·91 | 534·3 | 58·1 | 683·7 | 58·0 | W |
| 13 0† | 25 13·05 | 532·7 | 57·9 | 683·2 | 57·6 | W |
| 14 0† | 24·94 | 531·7 | 57·7 | 661·5 | 57·3 | W |
| 15 0 | 15·59 | 535·7 | 57·4 | 653·6 | 57·1 | W |
| 16 0 | 12·60 | 536·3 | 57·2 | 656·8 | 56·7 | W |
| 17 15 | 17·76 | 522·7 | 56·9 | 664·2 | 56·1 | W |
| 18 0 | 14·91 | 527·4 | 56·7 | 655·6 | 55·9 | W |
| 19 0 | 11·98 | 523·0 | 56·4 | 672·5 | 55·8 | B |
| 20 0 | 10·78 | 519·8 | 56·2 | 679·3 | 55·7 | B |
| 21 0 | 12·56 | 519·4 | 56·0 | 688·2 | 55·7 | H |
| 22 0 | 15·91 | 514·2 | 56·0 | 680·7 | 56·1 | H |
| 23 0 | 18·27 | 513·1 | 56·1 | 676·0 | 56·5 | B |
| 18 0 0 | 21·01 | 519·3 | 56·2 | 673·4 | 57·0 | H |
| 1 0 | 21·53 | 534·1 | 56·5 | 673·2 | 57·2 | H |
| 2 0 | 22·82 | 534·5 | 56·8 | 682·7 | 57·4 | B |
| 3 0 | 21·53 | 538·4 | 57·0 | 690·7 | 57·4 | B |
| 4 0 | 20·94 | 542·3 | 57·0 | 703·7 | 57·5 | W |
| 5 0 | 20·85 | 545·9 | 57·0 | 706·9 | 57·6 | W |
| 6 0 | 18·95 | 543·7 | 57·1 | 710·9 | 57·5 | W |
| 7 0 | 14·92 | 541·1 | 57·1 | 721·6 | 57·4 | W |
| 8 0 | 18·16 | 543·1 | 57·1 | 713·7 | 57·2 | W |
| 9 0 | 17·49 | 539·9 | 57·0 | 710·4 | 57·0 | W |
| 10 0 | 16·70 | 535·7 | 56·8 | 703·6 | 56·7 | W |
| 11 0† | 19·01 | 552·7 | 56·6 | 666·5 | 56·5 | H |
| 12 0† | 12·06 | 530·4 | 56·5 | 664·4 | 56·5 | H |
| 13 0 | 25 14·20 | 531·0 | 56·3 | 680·1 | 56·4 | H |
| 14 0 | 14·70 | 533·4 | 56·2 | 690·1 | 56·4 | H |
| 15 0 | 13·86 | 530·4 | 56·1 | 691·8 | 56·0 | H |
| 16 0 | 17·53 | 525·5 | 56·0 | 688·6 | 55·7 | H |
| 17 0 | 15·34 | 524·6 | 55·7 | 689·4 | 55·3 | H |
| 18 0 | 13·49 | 524·0 | 55·4 | 694·5 | 54·9 | H |
| 19 0 | 11·61 | 523·2 | 55·0 | 692·4 | 54·5 | W |
| 20 0 | 12·01 | 520·2 | 54·9 | 690·4 | 54·3 | W |
| 21 0 | 13·52 | 520·1 | 54·7 | 690·8 | 54·2 | B |
| 22 0 | 16·05 | 517·2 | 54·6 | 697·5 | 54·3 | W |
| 23 0 | 19·37 | 518·1 | 54·7 | 690·5 | 54·7 | W |
| 19 0 0 | 22·69 | 524·8 | 54·7 | 682·4 | 55·0 | W |
| 1 0 | 23·78 | 528·2 | 54·8 | 680·8 | 55·2 | W |
| 2 0 | 24·23 | 531·2 | 54·9 | 684·3 | 55·6 | W |
| 3 0 | 23·09 | 537·1 | 55·1 | 686·8 | 56·0 | W |
| 4 0 | 21·14 | 538·5 | 55·5 | 690·7 | 56·3 | W |
| 5 0 | 18·81 | 539·5 | 55·9 | 703·9 | 56·5 | W |
| 6 0 | 17·49 | 540·7 | 55·9 | 705·8 | 56·6 | H |
| 7 0 | 17·76 | 540·2 | 56·1 | 705·1 | 56·7 | H |
| 8 0 | 17·56 | 541·6 | 56·1 | 703·4 | 56·8 | H |
| 9 0 | 14·51 | 538·2 | 56·1 | 705·7 | 56·7 | H |
| 10 0 | 17·49 | 535·6 | 56·0 | 702·1 | 56·4 | H |
| 11 0 | 16·82 | 533·2 | 56·0 | 699·9 | 56·4 | W |
| 12 0 | 16·57 | 533·9 | 55·9 | 695·9 | 56·4 | W |

| Göttingen Mean Time of Declination Obs. | Declination. | Bifilar. | | Balance. | | Observer's Initial. |
|---|---|---|---|---|---|---|
| | | Corrected. | Thermometer. | Corrected. | Thermometer. | |
| d. h. m. | ° ′ | Sc. Div. | ° | Mic. Div. | ° | |
| 19 13 0 | 25 15·44 | 530·2 | 55·9 | 696·2 | 56·4 | D |
| 14 0 | 14·80 | 529·5 | 55·9 | 696·7 | 56·0 | D |
| 15 0 | 14·24 | 530·0 | 55·6 | 694·1 | 55·6 | D |
| 16 0 | 14·94 | 528·0 | 55·3 | 701·5 | 55·3 | D |
| 17 0 | 14·37 | 529·8 | 55·1 | 688·9 | 54·9 | B |
| 18 0 | 12·01 | 527·2 | 54·8 | 716·9 | 54·5 | B |
| 19 0 | 12·01 | 524·1 | 54·6 | 705·4 | 54·2 | B |
| 20 0 | 13·29 | 522·6 | 54·4 | 704·8 | 54·0 | B |
| 21 0 | 13·47 | 520·4 | 54·2 | 698·1 | 54·0 | H |
| 22 0 | 13·81 | 516·3 | 54·0 | 694·0 | 54·2 | H |
| 23 0 | 16·30 | 515·3 | 54·0 | 687·9 | 54·9 | H |
| 20 0 0 | 19·51 | 519·4 | 54·3 | 691·5 | 55·7 | W |
| 1 0 | 21·53 | 527·8 | 55·0 | 689·3 | 57·1 | W |
| 2 0 | 22·47 | 531·7 | 55·9 | 691·5 | 58·3 | W |
| 3 0 | 22·27 | 536·3 | 56·7 | 693·1 | 58·9 | W |
| 4 0 | 22·37 | 538·3 | 57·3 | 695·8 | 59·4 | H |
| 5 0 | 19·14 | 542·6 | 57·8 | 699·5 | 59·8 | H |
| 6 0 | 16·95 | 541·8 | 58·0 | 698·4 | 59·8 | D |
| 7 0 | 16·63 | 545·2 | 58·2 | 697·8 | 59·8 | D |
| 8 0 | 18·16 | 544·5 | 58·4 | 697·2 | 59·8 | B |
| 9 0 | 16·73 | 543·4 | 58·5 | 693·4 | 59·7 | B |
| 10 0 | 13·64 | 548·8 | 58·5 | 679·3 | 59·7 | B |
| 11 0 | 14·73 | 540·7 | 58·6 | 664·9 | 59·5 | W |
| 12 0 | 14·26 | 537·9 | 58·5 | 671·4 | 59·3 | W |
| 13 0 | 25 13·37 | 539·8 | 58·3 | 671·5 | 59·0 | W |
| 14 0 | 10·92 | 531·2 | 58·2 | 669·5 | 58·9 | W |
| 15 0† | 16·28 | 529·1 | 58·1 | 667·4 | 58·8 | W |
| 16 0† | 10·92 | 533·4 | 58·1 | 659·9 | 58·9 | W |
| 17 0† | 07·98 | 530·9 | 58·1 | 659·3 | 58·7 | W |
| 18 0 | 08·26 | 529·9 | 58·0 | 670·0 | 58·7 | W |
| 19 0 | 09·37 | 526·3 | 58·3 | 678·3 | 59·0 | B |
| 20 0 | 10·01 | 525·0 | 58·6 | 687·1 | 59·3 | B |
| 21 0 | 14·17 | 519·1 | 58·7 | 689·3 | 59·6 | H |
| 22 0 | 17·89 | 516·9 | 58·9 | 668·8 | 59·9 | H |
| 23 0 | 19·62 | 515·1 | 59·0 | 663·7 | 60·2 | H |
| 21 0 0 | 24·59 | 517·0 | 59·4 | 661·3 | 60·8 | B |
| 1 0 | 27·31 | 531·8 | 59·9 | 663·8 | 61·5 | H |
| 2 0 | 27·75 | 538·4 | 60·4 | 662·5 | 62·2 | B |
| 3 0 | 27·61 | 535·6 | 61·0 | 677·2 | 63·0 | H |
| 4 0 | 25·58 | 541·8 | 61·7 | 705·2 | 63·6 | B |
| 5 0 | 22·87 | 540·2 | 62·2 | 728·0 | 64·2 | B |
| 6 0 | 19·53 | 541·6 | 62·7 | 746·0 | 64·5 | W |
| 7 0 | 18·57 | 543·2 | 63·0 | 746·3 | 64·5 | W |
| 8 0 | 18·34 | 547·1 | 63·0 | 734·4 | 64·1 | W |
| 9 0 | 14·73 | 543·1 | 63·0 | 731·6 | 63·6 | W |
| 10 0 | 15·78 | 540·0 | 62·8 | 716·5 | 63·2 | W |
| 11 0 | 14·11 | 538·0 | 62·4 | 697·5 | 62·6 | H |
| 12 0 | 12·75 | 523·7 | 62·1 | 688·6 | 62·1 | H |
| 13 0 | 25 13·17 | 527·5 | 61·8 | 687·4 | 61·6 | H |
| 14 0 | 14·51 | 535·8 | 61·4 | 660·9 | 61·1 | H |
| 15 0 | 11·96 | 529·1 | 61·0 | 669·7 | 60·6 | H |
| 16 0 | 12·73 | 529·1 | 60·7 | 686·7 | 60·2 | H |
| 17 0 | 11·19 | 526·6 | 60·3 | 697·9 | 59·8 | H |
| 18 0 | 12·55 | 525·2 | 60·0 | 698·6 | 59·5 | H |
| 19 4 | 12·43 | 524·9 | 60·0 | 704·9 | 59·6 | W |
| 20 0 | 13·23 | 525·2 | 59·9 | 699·6 | 59·8 | W |

DECLINATION. Magnet untouched, May 29d—Aug. 4d.

BIFILAR. Observed 2m after the Declination, $k$=0·000140. BALANCE. Observed 3m after the Declination, $k$=0·0000085.

† Extra Observations made.

| Göttingen Mean Time of Declination Obs. | | | Declination. | | Bifilar. | | Balance. | | Observer's Initial. |
|---|---|---|---|---|---|---|---|---|---|
| | | | | | Corrected. | Thermometer. | Corrected. | Thermometer. | |
| d. | h. | m. | ° | ′ | Sc. Div. | ° | Mic. Div. | ° | |
| 21 | 21 | 5 | 25 | 14·20 | 521·7 | 59·9 | 691·9 | 60·1 | B |
| | 22 | 0 | | 15·29 | 521·5 | 60·0 | 690·8 | 60·5 | W |
| | 23 | 0 | | 16·84 | 521·1 | 60·3 | 685·4 | 61·3 | W |
| 22 | 0 | 0 | | 19·12 | 523·5 | 60·8 | 681·6 | 62·1 | W |
| | 1 | 0 | | 20·18 | 526·3 | 61·3 | 682·0 | 62·9 | W |
| | 2 | 0 | | 20·65 | 528·6 | 61·9 | 686·9 | 63·7 | W |
| | 3 | 0 | | 20·38 | 531·6 | 62·6 | 688·3 | 64·5 | W |
| | 4 | 0 | | 19·37 | 532·0 | 63·2 | 683·0 | 65·3 | W |
| | 5 | 0 | | 18·57 | 534·7 | 63·9 | 688·2 | 66·0 | W |
| | 6 | 0 | | 18·72 | 534·8 | 64·4 | 683·9 | 66·5 | H |
| | 7 | 0 | | 18·81 | 540·4 | 64·9 | 684·2 | 66·8 | H |
| | 8 | 0 | | 18·16 | 536·7 | 65·2 | 690·6 | 66·9 | H |
| | 9 | 0 | | 17·26 | 539·3 | 65·5 | 683·5 | 66·6 | H |
| | 10 | 0 | | 16·52 | 536·6 | 65·5 | 686·0 | 66·0 | H |
| | 11 | 0 | | 16·63 | 535·8 | 65·2 | 680·7 | 65·2 | B |
| | 12 | 0 | | 16·21 | 535·8 | 64·9 | 676·1 | 64·5 | B |
| 23 | 13 | 0 | 25 | 15·69 | 532·3 | 71·0 | 666·7 | 71·0 | W |
| | 14 | 0 | | 15·41 | 531·3 | 70·5 | 667·0 | 70·3 | W |
| | 15 | 0 | | 15·36 | 531·2 | 70·0 | 667·3 | 69·5 | W |
| | 16 | 0 | | 14·10 | 529·9 | 69·5 | 672·0 | 68·6 | W |
| | 17 | 0 | | 13·00 | 529·8 | 68·9 | 680·5 | 68·0 | W |
| | 18 | 0 | | 11·37 | 528·6 | 68·5 | 687·1 | 67·4 | W |
| | 19 | 0 | | 10·85 | 525·3 | 68·0 | 688·0 | 67·0 | B |
| | 20 | 0 | | 11·25 | 524·1 | 67·6 | 686·0 | 66·5 | B |
| | 21 | 0 | | 12·02 | 520·9 | 67·2 | 683·0 | 66·6 | H |
| | 22 | 0 | | 13·44 | 519·1 | 67·1 | 683·5 | 66·8 | H |
| | 23 | 0 | | 15·47 | 521·2 | 67·0 | 678·8 | 67·0 | H |
| 24 | 0 | 0 | | 18·92 | 522·7 | 67·0 | 657·7 | 67·3 | H |
| | 1 | 0 | | 19·69 | 519·7 | 67·1 | 666·5 | 67·6 | H |
| | 2 | 0 | | 19·68 | 525·4 | 67·3 | 665·2 | 67·9 | H |
| | 3 | 0 | | 20·11 | 531·9 | 67·6 | 662·6 | 67·8 | W |
| | 4 | 0 | | 18·57 | 529·6 | 67·5 | 665·6 | 67·6 | H |
| | 5 | 0 | | 16·82 | 533·6 | 67·4 | 675·3 | 67·3 | B |
| | 6 | 0 | | 16·62 | 538·3 | 67·2 | 677·3 | 67·0 | W |
| | 7 | 0 | | 16·86 | 538·1 | 67·0 | 682·0 | 66·7 | W |
| | 8 | 0 | | 17·40 | 539·4 | 66·8 | 685·7 | 66·3 | W |
| | 9 | 0 | | 17·20 | 538·0 | 66·5 | 675·9 | 65·8 | W |
| | 10 | 0 | | 16·92 | 536·8 | 66·2 | 674·4 | 65·4 | W |
| | 11 | 0 | | 16·52 | 533·9 | 65·9 | 670·7 | 65·0 | H |
| | 12 | 0 | | 15·99 | 534·8 | 65·5 | 667·8 | 64·6 | H |
| | 13 | 0 | 25 | 14·84 | 531·6 | 65·1 | 669·0 | 64·3 | H |
| | 14 | 0 | | 14·67 | 531·8 | 64·8 | 670·5 | 64·0 | H |
| | 15 | 0 | | 14·44 | 531·9 | 64·4 | 669·5 | 63·5 | H |
| | 16 | 0 | | 14·20 | 531·0 | 64·1 | 669·7 | 63·0 | H |
| | 17 | 0 | | 12·78 | 533·5 | 63·8 | 670·1 | 62·5 | H |
| | 18 | 0 | | 11·77 | 529·1 | 63·4 | 674·5 | 62·0 | H |
| | 19 | 0 | | 10·81 | 523·6 | 63·0 | 674·1 | 61·3 | W |
| | 20 | 0 | | 12·85 | 521·3 | 62·6 | 667·9 | 60·7 | W |
| | 21 | 0 | | 12·78 | 519·0 | 62·1 | 657·2 | 60·0 | B |
| | 22 | 0 | | 14·78 | 518·2 | 61·6 | 659·3 | 59·5 | W |
| | 23 | 3 | | 16·80 | 516·9 | 61·1 | 650·6 | 59·1 | W |
| 25 | 0 | 4 | | 20·38 | 519·9 | 60·7 | 636·1 | 58·7 | W |
| | 1 | 0 | | 22·30 | 527·4 | 60·2 | 644·0 | 58·3 | W |
| | 2 | 0 | | 22·33 | 527·2 | 59·8 | 642·5 | 58·0 | W |
| | 3 | 0 | | 23·34 | 529·5 | 59·5 | 644·0 | 57·9 | W |
| | 4 | 0 | | 21·34 | 531·1 | 59·2 | 645·7 | 57·7 | H |

| Göttingen Mean Time of Declination Obs. | | | Declination. | | Bifilar. | | Balance. | | Observer's Initial. |
|---|---|---|---|---|---|---|---|---|---|
| | | | | | Corrected. | Thermometer. | Corrected. | Thermometer. | |
| d. | h. | m. | ° | ′ | Sc. Div. | ° | Mic. Div. | ° | |
| 25 | 5 | 0 | 25 | 20·06 | 535·3 | 59·0 | 661·1 | 57·5 | W |
| | 6 | 0 | | 17·34 | 536·3 | 58·8 | 672·2 | 57·5 | H |
| | 7 | 0 | | 16·89 | 536·5 | 58·5 | 678·4 | 57·2 | H |
| | 8 | 0 | | 15·58 | 539·3 | 58·2 | 676·2 | 56·7 | H |
| | 9 | 0 | | 15·99 | 538·5 | 57·9 | 672·3 | 56·2 | H |
| | 10 | 0 | | 16·82 | 534·9 | 57·4 | 669·8 | 55·6 | H |
| | 11 | 0 | | 16·63 | 532·1 | 57·0 | 667·7 | 55·2 | B |
| | 12 | 0 | | 15·85 | 530·1 | 56·6 | 665·7 | 54·8 | B |
| | 13 | 0 | 25 | 16·10 | 530·5 | 56·2 | 662·9 | 54·4 | B |
| | 14 | 0 | | 14·85 | 529·0 | 55·8 | 659·6 | 54·0 | B |
| | 15 | 0 | | 12·76 | 529·9 | 55·4 | 656·5 | 53·5 | B |
| | 16 | 0 | | 12·04 | 532·9 | 55·0 | 656·7 | 53·0 | B |
| | 17 | 0 | | 09·79 | 532·3 | 54·6 | 662·2 | 52·8 | B |
| | 18 | 0 | | 10·74 | 537·8 | 54·3 | 652·3 | 52·5 | B |
| | 19 | 0 | | 10·95 | 520·0 | 53·9 | 647·3 | 52·5 | H |
| | 20 | 7 | | 11·95 | 530·5 | 53·7 | 647·0 | 52·6 | H |
| | 21 | 0 | | 12·65 | 523·4 | 53·6 | 651·4 | 52·7 | W |
| | 22 | 0 | | 17·02 | 520·1 | 53·4 | 643·2 | 53·0 | H |
| | 23 | 0 | | 18·00 | 522·9 | 53·5 | 642·1 | 53·5 | H |
| 26 | 0 | 0 | | 15·88 | 524·1 | 53·7 | 635·0 | 54·0 | H |
| | 1 | 0 | | 22·00 | 526·2 | 53·9 | 642·4 | 54·4 | H |
| | 2 | 0 | | 22·24 | 523·4 | 54·0 | 661·4 | 54·8 | H |
| | 3 | 0 | | 23·16 | 532·8 | 54·2 | 658·1 | 55·0 | H |
| | 4 | 0 | | 20·70 | 535·2 | 54·4 | 661·4 | 55·2 | H |
| | 5 | 0 | | 17·56 | 538·2 | 54·7 | 668·6 | 55·4 | H |
| | 6 | 0 | | 16·38 | 537·6 | 54·9 | 661·2 | 55·5 | B |
| | 7 | 0 | | 16·75 | 544·1 | 55·0 | 661·2 | 55·4 | B |
| | 8 | 0 | | 16·55 | 544·7 | 55·0 | 667·3 | 55·1 | B |
| | 9 | 0 | | 13·43 | 547·8 | 54·9 | 669·5 | 54·8 | B |
| | 10 | 0 | | 13·50 | 535·0 | 54·7 | 667·3 | 54·5 | B |
| | 11 | 0 | | 14·94 | 531·4 | 54·5 | 662·5 | 54·3 | W |
| | 12 | 0 | | 15·54 | 531·6 | 54·2 | 656·0 | 54·1 | W |
| | 13 | 0 | 25 | 15·52 | 530·3 | 54·0 | 657·2 | 53·9 | W |
| | 14 | 0 | | 14·87 | 530·3 | 53·8 | 655·7 | 53·5 | W |
| | 15 | 0 | | 13·90 | 529·6 | 53·6 | 657·9 | 53·0 | W |
| | 16 | 0 | | 13·56 | 530·2 | 53·4 | 663·1 | 52·8 | W |
| | 17 | 0 | | 12·89 | 528·4 | 53·1 | 666·3 | 52·5 | W |
| | 18 | 0 | | 12·58 | 525·0 | 52·9 | 669·3 | 52·2 | W |
| | 19 | 0 | | 11·75 | 522·8 | 52·7 | 668·1 | 52·0 | B |
| | 20 | 0 | | 12·26 | 523·5 | 52·6 | 668·2 | 52·1 | B |
| | 21 | 0 | | 12·85 | 523·2 | 52·5 | 671·8 | 52·4 | H |
| | 22 | 0 | | 15·47 | 521·9 | 52·5 | 671·9 | 52·9 | H |
| | 23 | 0 | | 16·48 | 521·3 | 52·8 | 663·7 | 53·5 | B |
| 27 | 0 | 0 | | 20·16 | 526·6 | 53·1 | 645·4 | 54·5 | H |
| | 1 | 0 | | 21·37 | 531·4 | 53·7 | 636·8 | 55·3 | H |
| | 2 | 0 | | 21·36 | 533·8 | 54·4 | 640·6 | 56·0 | B |
| | 3 | 0 | | 21·53 | 532·3 | 55·0 | 645·2 | 56·8 | B |
| | 4 | 0 | | 20·42 | 533·8 | 55·7 | 646·7 | 57·6 | B |
| | 5 | 0 | | 19·71 | 535·6 | 56·3 | 649·4 | 58·1 | B |
| | 6 | 0 | | 18·16 | 537·5 | 56·8 | 654·5 | 58·4 | W |
| | 7 | 0 | | 17·71 | 543·2 | 57·2 | 658·7 | 58·7 | W |
| | 8 | 0 | | 14·70 | 542·2 | 57·6 | 673·4 | 58·9 | W |
| | 9 | 0 | | 16·65 | 542·1 | 57·7 | 674·9 | 59·0 | W |
| | 10 | 0 | | 16·48 | 539·3 | 57·8 | 672·0 | 58·6 | W |
| | 11 | 0 | | 16·50 | 535·8 | 57·8 | 666·6 | 58·2 | H |
| | 12 | 0 | | 16·25 | 534·8 | 57·5 | 665·4 | 57·8 | H |

DECLINATION. Magnet untouched, May 29d—Aug. 4d.

BIFILAR. Observed 2m after the Declination, $k$=0·000140. BALANCE. Observed 3m after the Declination, $k$=0·0000085.

June 25d—20h. Small insect seen on the balance cross plate.

| Göttingen Mean Time of Declination Obs. | | | Declination. | Bifilar. | | Balance. | | Observer's Initial. |
|---|---|---|---|---|---|---|---|---|
| | | | | Corrected. | Thermometer. | Corrected. | Thermometer. | |
| d. | h. | m. | ° ′ | Sc. Div. | ° | Mic. Div. | ° | |
| 27 | 13 | 0 | 25 15·42 | 533·4 | 57·2 | 672·6 | 57·4 | H |
| | 14 | 0 | 14·99 | 533·3 | 57·0 | 668·9 | 57·0 | H |
| | 15 | 0 | 15·44 | 533·3 | 56·7 | 662·3 | 56·6 | H |
| | 16 | 0 | 13·69 | 532·5 | 56·4 | 661·6 | 56·3 | H |
| | 17 | 0 | 13·27 | 533·1 | 56·1 | 662·7 | 55·9 | H |
| | 18 | 0 | 11·62 | 533·6 | 55·9 | 659·6 | 55·5 | H |
| | 19 | 0 | 12·01 | 531·3 | 55·7 | 668·2 | 55·3 | W |
| | 20 | 0 | 12·25 | 528·1 | 55·5 | 678·7 | 55·4 | W |
| | 21 | 0 | 13·39 | 523·9 | 55·4 | 676·2 | 55·5 | B |
| | 22 | 0 | 15·04 | 522·4 | 55·4 | 669·3 | 55·8 | W |
| | 23 | 0 | 17·19 | 522·5 | 55·7 | 673·4 | 56·4 | W |
| 28 | 0 | 0 | 20·11 | 527·0 | 56·0 | 665·2 | 57·1 | W |
| | 1 | 0 | 21·50 | 531·0 | 56·6 | 661·0 | 58·2 | W |
| | 2 | 0 | 22·17 | 538·3 | 57·2 | 647·5 | 59·2 | W |
| | 3 | 0 | 21·36 | 543·1 | 58·0 | 655·5 | 60·3 | W |
| | 4 | 2 | 20·05 | 543·2 | 59·0 | 648·0 | 61·7 | W |
| | 5 | 0 | 18·84 | 548·6 | 60·0 | 650·7 | 62·8 | W |
| | 6 | 0 | 18·07 | 547·0 | 61·1 | 660·4 | 64·0 | H |
| | 7 | 0 | 17·36 | 547·2 | 62·0 | 663·7 | 64·6 | H |
| | 8 | 0 | 16·86 | 546·5 | 62·7 | 659·4 | 64·2 | H |
| | 9 | 0 | 17·51 | 540·9 | 62·9 | 658·2 | 64·2 | H |
| | 10 | 0 | 16·72 | 545·4 | 62·8 | 661·8 | 63·6 | H |
| | 11 | 0 | 15·96 | 545·8 | 62·6 | 659·7 | 63·0 | B |
| | 12 | 0 | 14·50 | 542·4 | 62·2 | 659·5 | 62·4 | B |
| | 13 | 0 | 25 15·29 | 541·8 | 61·8 | 658·9 | 61·8 | B |
| | 14 | 0 | 16·50 | 546·1 | 61·4 | 651·2 | 61·1 | B |
| | 15 | 0† | 14·77 | 536·7 | 61·0 | 649·7 | 60·5 | B |
| | 16 | 0 | 14·20 | 537·3 | 60·6 | 655·5 | 60·0 | B |
| | 17 | 0 | 11·71 | 534·4 | 60·2 | 662·2 | 59·3 | B |
| | 18 | 0† | 06·06 | 530·8 | 59·8 | 656·5 | 58·7 | B |
| | 19 | 0† | 08·82 | 532·0 | 59·3 | 655·9 | 58·2 | H |
| | 20 | 0† | 11·35 | 528·6 | 58·9 | 661·4 | 58·0 | H |
| | 21 | 0† | 08·95 | 525·5 | 58·7 | 658·1 | 57·8 | W |
| | 22 | 0† | 17·40 | 512·6 | 58·4 | 662·0 | 57·9 | H |
| | 23 | 0 | 18·60 | 515·4 | 58·2 | 650·3 | 58·2 | H |
| 29 | 0 | 3 | 24·59 | 519·2 | 58·2 | 640·1 | 58·8 | H |
| | 1 | 0 | 22·17 | 534·0 | 58·5 | 641·4 | 59·5 | H |
| | 2 | 0 | 22·91 | 535·4 | 59·1 | 661·9 | 60·5 | H |
| | 3 | 0 | 20·20 | 554·0 | 59·9 | 670·9 | 61·5 | H |
| | 4 | 0 | 22·01 | 540·1 | 60·7 | 679·6 | 62·5 | H |
| | 5 | 0 | 20·27 | 545·7 | 61·4 | 681·7 | 63·4 | H |
| | 6 | 0 | 18·37 | 554·6 | 62·1 | 679·5 | 63·4 | B |
| | 7 | 0 | 15·65 | 545·6 | 62·3 | 686·1 | 63·3 | B |
| | 8 | 0 | 13·64 | 543·5 | 62·4 | 682·7 | 63·0 | B |
| | 9 | 0 | 14·48 | 542·2 | 62·3 | 676·0 | 62·6 | B |
| | 10 | 0 | 13·05 | 540·6 | 62·0 | 652·6 | 62·2 | B |
| | 11 | 0 | 14·98 | 533·6 | 61·8 | 656·7 | 61·7 | W |
| | 12 | 0 | 16·65 | 531·6 | 61·6 | 644·5 | 61·0 | W |
| 30 | 13 | 0 | 25 16·10 | 531·1 | 61·2 | 657·6 | 60·5 | H |
| | 14 | 0 | 16·85 | 532·6 | 60·7 | 665·1 | 59·9 | H |
| | 15 | 0 | 17·24 | 532·2 | 60·2 | 657·6 | 59·2 | H |
| | 16 | 0† | 20·18 | 527·8 | 59·7 | 648·3 | 58·4 | H |
| | 17 | 0† | 13·30 | 529·0 | 59·0 | 658·4 | 57·8 | H |
| | 18 | 0† | 10·03 | 525·2 | 58·6 | 667·4 | 57·2 | H |
| | 19 | 0 | 09·42 | 524·1 | 58·2 | 672·2 | 56·8 | W |
| | 20 | 0 | 08·48 | 521·9 | 57·9 | 658·9 | 56·5 | W |

| Göttingen Mean Time of Declination Obs. | | | Declination. | Bifilar. | | Balance. | | Observer's Initial. |
|---|---|---|---|---|---|---|---|---|
| | | | | Corrected. | Thermometer. | Corrected. | Thermometer. | |
| d. | h. | m. | ° ′ | Sc. Div. | ° | Mic. Div. | ° | |
| 30 | 21 | 0 | 25 11·44 | 515·9 | 57·6 | 647·1 | 56·5 | B |
| | 22 | 0 | 15·41 | 515·1 | 57·4 | 655·0 | 56·7 | W |
| | 23 | 0 | 17·39 | 523·3 | 57·3 | 650·1 | 57·1 | W |
| 1 | 0 | 0 | 18·67 | 524·7 | 57·4 | 637·3 | 57·5 | W |
| | 1 | 0 | 19·62 | 524·8 | 57·7 | 645·8 | 58·3 | W |
| | 2 | 0 | 21·26 | 529·8 | 58·1 | 640·6 | 59·3 | W |
| | 3 | 0 | 20·32 | 531·9 | 58·8 | 642·4 | 60·3 | W |
| | 4 | 0 | 18·68 | 534·1 | 59·5 | 659·3 | 61·1 | W |
| | 5 | 0 | 17·27 | 533·7 | 60·2 | 671·4 | 61·8 | W |
| | 6 | 0 | 16·75 | 539·9 | 60·8 | 667·6 | 62·4 | H |
| | 7 | 0 | 15·76 | 537·3 | 61·2 | 665·2 | 62·8 | H |
| | 8 | 0 | 16·10 | 544·0 | 61·5 | 660·8 | 62·5 | H |
| | 9 | 0 | 16·18 | 540·4 | 61·6 | 661·3 | 62·1 | H |
| | 10 | 0 | 15·11 | 537·1 | 61·4 | 664·6 | 61·4 | H |
| | 11 | 0 | 14·91 | 534·1 | 61·2 | 661·0 | 60·8 | B |
| | 12 | 0 | 15·51 | 534·1 | 60·8 | 658·0 | 60·3 | B |
| | 13 | 0 | 25 16·18 | 532·9 | 60·4 | 654·3 | 59·7 | B |
| | 14 | 0† | 16·39 | 536·3 | 60·0 | 649·0 | 59·2 | B |
| | 15 | 0 | 16·15 | 533·0 | 59·7 | 646·2 | 58·8 | B |
| | 16 | 0 | 15·67 | 532·6 | 59·3 | 656·2 | 58·3 | B |
| | 17 | 0 | 16·21 | 532·3 | 59·0 | 661·0 | 58·0 | B |
| | 18 | 0 | 12·98 | 532·7 | 58·7 | 660·4 | 57·7 | B |
| | 19 | 0 | 11·12 | 530·9 | 58·5 | 670·6 | 57·9 | H |
| | 20 | 0 | 10·25 | 529·2 | 58·5 | 673·8 | 58·1 | H |
| | 21 | 0 | 11·61 | 526·5 | 58·5 | 669·8 | 58·3 | W |
| | 22 | 0 | 14·11 | 522·3 | 58·4 | 673·4 | 58·6 | H |
| | 23 | 0 | 17·00 | 519·0 | 58·6 | 672·3 | 59·1 | H |
| 2 | 0 | 0 | 20·77 | 520·9 | 58·8 | 661·2 | 59·5 | H |
| | 1 | 0 | 20·96 | 523·6 | 59·0 | 660·1 | 60·0 | H |
| | 2 | 0 | 22·71 | 533·3 | 59·4 | 660·1 | 60·5 | H |
| | 3 | 0 | 23·76 | 535·7 | 60·0 | 666·4 | 61·5 | H |
| | 4 | 0 | 22·42 | 542·9 | 60·5 | 671·3 | 62·3 | H |
| | 5 | 0 | 20·82 | 540·3 | 61·0 | 678·6 | 62·9 | H |
| | 6 | 0 | 18·97 | 542·5 | 61·7 | 676·8 | 63·3 | B |
| | 7 | 0 | 17·98 | 540·5 | 62·2 | 676·4 | 63·5 | B |
| | 8 | 0 | 17·36 | 539·7 | 62·6 | 680·2 | 63·5 | B |
| | 9 | 0 | 16·68 | 536·6 | 62·7 | 674·4 | 63·2 | B |
| | 10 | 0 | 16·01 | 537·8 | 62·4 | 672·4 | 62·6 | B |
| | 11 | 0 | 16·12 | 537·2 | 62·0 | 665·4 | 62·0 | W |
| | 12 | 0 | 15·91 | 536·0 | 61·7 | 663·6 | 61·5 | W |
| | 13 | 0 | 25 14·78 | 536·1 | 61·4 | 660·8 | 61·0 | W |
| | 14 | 0 | 14·64 | 534·2 | 61·0 | 660·3 | 60·5 | W |
| | 15 | 0 | 14·75 | 532·6 | 60·7 | 664·5 | 60·0 | W |
| | 16 | 0 | 14·08 | 532·6 | 60·3 | 669·7 | 59·5 | W |
| | 17 | 0 | 12·04 | 529·4 | 60·0 | 674·3 | 58·9 | W |
| | 18 | 0 | 10·77 | 530·5 | 59·6 | 675·4 | 58·3 | W |
| | 19 | 0 | 10·70 | 528·2 | 59·2 | 676·7 | 58·0 | B |
| | 20 | 0 | 11·07 | 526·6 | 58·9 | 665·7 | 58·0 | B |
| | 21 | 0 | 11·66 | 524·3 | 58·7 | 666·6 | 58·1 | H |
| | 22 | 0 | 14·03 | 523·4 | 58·7 | 661·5 | 58·5 | H |
| | 23 | 0 | 17·17 | 520·9 | 58·7 | 666·9 | 58·9 | B |
| 3 | 0 | 0 | 20·38 | 520·5 | 58·9 | 643·7 | 59·6 | B |
| | 1 | 0 | 20·97 | 529·3 | 59·3 | 641·5 | 60·5 | H |
| | 2 | 0 | 21·53 | 537·5 | 60·0 | 641·9 | 61·5 | B |
| | 3 | 0 | 20·85 | 536·3 | 60·8 | 648·6 | 62·6 | H |
| | 4 | 3 | 19·98 | 543·2 | 61·6 | 657·2 | 63·3 | H |

DECLINATION. Magnet untouched, May 29d—Aug. 4d.

BIFILAR. Observed 2m after the Declination, $k=0{\cdot}000140$. BALANCE. Observed 3m after the Declination, $k=0{\cdot}0000085$.

† Extra Observations made.

| Göttingen Mean Time of Declination Obs. | | | Declination. | | Bifilar. | | Balance. | | Observer's Initial. |
|---|---|---|---|---|---|---|---|---|---|
| | | | | | Corrected. | Thermometer. | Corrected. | Thermometer. | |
| d. | h. | m. | ° | ′ | Sc. Div. | ° | Mic. Div. | ° | |
| 3 | 5 | 0 | 25 | 20·18 | 537·7 | 62·0 | 662·0 | 63·4 | B |
| | 6 | 0 | | 19·66 | 546·3 | 62·3 | 662·7 | 63·3 | W |
| | 7 | 0 | | 18·88 | 542·0 | 62·5 | 672·4 | 63·3 | W |
| | 8 | 2 | | 16·75 | 544·3 | 62·5 | 672·6 | 63·0 | W |
| | 9 | 0 | | 17·09 | 541·4 | 62·3 | 670·0 | 62·9 | W |
| | 10 | 0 | | 16·36 | 541·7 | 62·1 | 654·7 | 62·4 | W |
| | 11 | 0 | | 16·21 | 537·8 | 61·8 | 658·4 | 61·7 | H |
| | 12 | 0 | | 16·19 | 534·3 | 61·4 | 652·2 | 61·0 | H |
| | 13 | 0 | 25 | 15·92 | 535·5 | 61·0 | 653·0 | 60·3 | H |
| | 14 | 0 | | 15·27 | 535·4 | 60·5 | 662·0 | 59·5 | H |
| | 15 | 0 | | 15·62 | 534·4 | 60·0 | 658·8 | 58·8 | H |
| | 16 | 0 | | 13·14 | 535·4 | 59·5 | 663·0 | 58·2 | H |
| | 17 | 0 | | 12·51 | 527·7 | 59·0 | 670·4 | 57·7 | H |
| | 18 | 0 | | 09·82 | 524·6 | 58·6 | 677·7 | 57·2 | H |
| | 19 | 0 | | 11·34 | 526·6 | 58·2 | 675·0 | 56·7 | W |
| | 20 | 0† | | 14·48 | 527·9 | 57·8 | 663·4 | 56·5 | W |
| | 21 | 0 | | 12·40 | 524·9 | 57·5 | 660·0 | 56·3 | B |
| | 22 | 0 | | 13·36 | 524·4 | 57·2 | 663·2 | 56·3 | W |
| | 23 | 0 | | 15·18 | 525·5 | 57·1 | 654·3 | 56·3 | W |
| 4 | 0 | 0 | | 18·16 | 523·2 | 56·9 | 649·9 | 56·4 | W |
| | 1 | 0 | | 20·85 | 528·4 | 56·9 | 646·3 | 56·5 | W |
| | 2 | 0 | | 23·07 | 532·2 | 56·9 | 656·2 | 56·7 | W |
| | 3 | 0 | | 23·63 | 534·3 | 56·9 | 658·6 | 56·9 | B |
| | 4 | 0 | | 21·64 | 535·1 | 57·0 | 662·5 | 57·2 | W |
| | 5 | 0 | | 19·64 | 548·0 | 57·1 | 671·9 | 57·6 | W |
| | 6 | 0 | | 18·80 | 542·9 | 57·3 | 687·3 | 58·2 | H |
| | 7 | 0 | | 19·51 | 545·0 | 57·7 | 686·8 | 58·5 | H |
| | 8 | 0 | | 17·51 | 544·9 | 58·1 | 686·7 | 58·9 | H |
| | 9 | 0 | | 16·13 | 539·1 | 58·5 | 690·5 | 59·4 | H |
| | 10 | 0 | | 15·15 | 535·5 | 58·8 | 675·7 | 58·8 | H |
| | 11 | 0 | | 15·51 | 534·6 | 58·7 | 667·5 | 58·3 | B |
| | 12 | 0 | | 15·47 | 534·6 | 58·3 | 661·7 | 57·7 | B |
| | 13 | 0 | 25 | 15·02 | 533·3 | 57·9 | 662·2 | 57·1 | B |
| | 14 | 0 | | 15·32 | 534·3 | 57·6 | 660·8 | 56·6 | B |
| | 15 | 0 | | 15·74 | 531·9 | 57·2 | 662·3 | 56·2 | B |
| | 16 | 0 | | 14·20 | 531·3 | 56·9 | 663·1 | 55·8 | B |
| | 17 | 0 | | 13·54 | 531·4 | 56·6 | 671·5 | 55·5 | B |
| | 18 | 0 | | 12·01 | 528·4 | 56·2 | 676·4 | 55·2 | B |
| | 19 | 0 | | 12·18 | 526·5 | 55·9 | 672·3 | 54·9 | H |
| | 20 | 0 | | 11·34 | 524·5 | 55·7 | 673·4 | 55·0 | H |
| | 21 | 0 | | 14·31 | 522·9 | 55·6 | 668·2 | 55·0 | W |
| | 22 | 0 | | 15·36 | 522·8 | 55·4 | 664·5 | 55·2 | H |
| | 23 | 0 | | 18·20 | 521·3 | 55·3 | 665·3 | 55·9 | H |
| 5 | 0 | 0 | | 21·03 | 523·2 | 55·6 | 659·9 | 56·2 | H |
| | 1 | 0 | | 22·28 | 522·8 | 55·9 | 654·5 | 56·8 | H |
| | 2 | 0 | | 21·17 | 523·7 | 56·3 | 651·5 | 57·5 | H |
| | 3 | 0 | | 22·06 | 531·1 | 56·7 | 649·0 | 57·9 | H |
| | 4 | 0 | | 21·53 | 533·3 | 57·0 | 666·6 | 58·3 | H |
| | 5 | 0 | | 20·40 | 535·5 | 57·4 | 678·8 | 58·7 | H |
| | 6 | 0 | | 19·51 | 542·4 | 57·9 | 676·6 | 59·0 | B |
| | 7 | 0 | | 18·32 | 546·3 | 58·3 | 672·2 | 59·3 | B |
| | 8 | 0 | | 17·20 | 542·5 | 58·5 | 670·6 | 59·5 | B |
| | 9 | 0 | | 16·08 | 540·4 | 58·7 | 669·6 | 59·3 | B |
| | 10 | 0 | | 16·30 | 538·1 | 58·6 | 664·4 | 59·0 | B |
| | 11 | 0 | | 15·64 | 535·3 | 58·4 | 665·3 | 58·7 | W |
| | 12 | 0† | | 17·13 | 536·1 | 58·2 | 658·6 | 58·4 | W |

| Göttingen Mean Time of Declination Obs. | | | Declination. | | Bifilar. | | Balance. | | Observer's Initial. |
|---|---|---|---|---|---|---|---|---|---|
| | | | | | Corrected. | Thermometer. | Corrected. | Thermometer. | |
| d. | h. | m. | ° | ′ | Sc. Div. | ° | Mic. Div. | ° | |
| 5 | 13 | 0† | 25 | 13·69 | 531·7 | 58·0 | 658·7 | 58·2 | W |
| | 14 | 0 | | 13·86 | 530·5 | 57·9 | 658·3 | 58·0 | W |
| | 15 | 0 | | 13·72 | 531·7 | 57·7 | 660·7 | 57·5 | W |
| | 16 | 0 | | 14·04 | 530·9 | 57·5 | 662·5 | 57·0 | W |
| | 17 | 0 | | 13·12 | 532·2 | 57·2 | 668·0 | 56·7 | W |
| | 18 | 0 | | 10·30 | 529·3 | 57·0 | 670·5 | 56·4 | W |
| | 19 | 0 | | 11·57 | 527·7 | 56·8 | 665·4 | 56·1 | B |
| | 20 | 0 | | 11·01 | 524·8 | 56·6 | 669·1 | 56·0 | B |
| | 21 | 0 | | 12·62 | 520·1 | 56·3 | 661·9 | 55·9 | H |
| | 22 | 0 | | 14·21 | 515·8 | 56·1 | 659·6 | 55·8 | H |
| | 23 | 0 | | 16·65 | 513·3 | 56·0 | 656·7 | 55·8 | B |
| 6 | 0 | 0 | | 18·84 | 515·4 | 56·0 | 653·2 | 56·0 | B |
| | 1 | 0 | | 21·39 | 523·1 | 55·9 | 652·1 | 56·2 | H |
| | 2 | 0 | | 22·69 | 527·4 | 56·0 | 654·1 | 56·4 | B |
| | 3 | 0 | | 22·78 | 534·4 | 56·1 | 656·9 | 56·7 | H |
| | 4 | 0 | | 19·08 | 534·8 | 56·4 | 668·6 | 57·3 | H |
| | 5 | 0 | | 18·03 | 542·3 | 57·1 | 672·3 | 58·3 | B |
| | 6 | 0 | | 17·39 | 543·5 | 57·7 | 673·6 | 59·0 | W |
| | 7 | 0 | | 17·39 | 541·3 | 58·3 | 668·4 | 59·8 | W |
| | 8 | 0 | | 17·39 | 543·6 | 58·9 | 667·8 | 60·2 | W |
| | 9 | 0 | | 16·92 | 538·8 | 59·3 | 667·8 | 60·2 | W |
| | 10 | 0 | | 17·39 | 536·2 | 59·4 | 667·7 | 59·9 | W |
| | 11 | 0 | | 16·05 | 535·1 | 59·3 | 665·1 | 59·6 | H |
| | 12 | 0 | | 15·47 | 535·6 | 59·0 | 663·8 | 59·2 | H |
| 7 | 13 | 0 | 25 | 14·43 | 540·9 | 61·8 | 661·4 | 60·8 | B |
| | 14 | 0 | | 14·91 | 535·7 | 61·2 | 660·6 | 60·0 | B |
| | 15 | 0† | | 17·58 | 534·7 | 60·6 | 660·9 | 59·0 | B |
| | 16 | 0 | | 15·51 | 534·5 | 60·0 | 654·4 | 58·3 | B |
| | 17 | 0 | | 13·47 | 538·3 | 59·4 | 662·4 | 57·6 | B |
| | 18 | 0† | | 10·33 | 534·5 | 58·9 | 671·8 | 57·0 | B |
| | 19 | 0† | | 12·56 | 528·5 | 58·4 | 661·5 | 56·6 | H |
| | 20 | 0 | | 14·23 | 533·1 | 58·0 | 647·6 | 56·6 | H |
| | 21 | 0 | | 14·06 | 530·5 | 57·8 | 664·5 | 57·0 | W |
| | 22 | 0 | | 16·35 | 521·1 | 57·7 | 654·6 | 57·5 | H |
| | 23 | 0 | | 18·82 | 514·2 | 57·9 | 658·3 | 58·5 | H |
| 8 | 0 | 0 | | 23·51 | 520·3 | 58·4 | 663·0 | 59·7 | H |
| | 1 | 0 | | 25·09 | 528·8 | 59·0 | 667·8 | 60·5 | H |
| | 2 | 0 | | 26·30 | 529·1 | 59·7 | 664·6 | 61·3 | H |
| | 3 | 0 | | 23·27 | 538·7 | 60·2 | 665·8 | 62·0 | H |
| | 4 | 0† | | 22·13 | 544·0 | 60·8 | 711·4 | 63·0 | H |
| | 5 | 0† | | 21·91 | 562·7 | 61·6 | 761·1 | 64·0 | H |
| | 6 | 0† | | 21·36 | 551·9 | 62·6 | 764·6 | 64·7 | B |
| | 7 | 0 | | 20·63 | 563·8 | 63·3 | 708·7 | 65·4 | B |
| | 8 | 0 | | 17·44 | 552·9 | 64·0 | 700·9 | 66·0 | B |
| | 9 | 0 | | 18·03 | 541·1 | 64·6 | 695·9 | 66·0 | B |
| | 10 | 0 | | 17·47 | 538·7 | 64·8 | 682·1 | 65·5 | B |
| | 11 | 0 | | 16·90 | 533·6 | 64·6 | 675·4 | 65·0 | W |
| | 12 | 0 | | 16·53 | 541·7 | 64·2 | 657·4 | 64·2 | W |
| | 13 | 0† | 25 | 13·20 | 538·1 | 63·8 | 658·6 | 63·5 | W |
| | 14 | 0† | | 15·24 | 536·0 | 63·3 | 661·0 | 63·0 | W |
| | 15 | 0† | | 14·51 | 535·2 | 62·9 | 653·8 | 62·4 | W |
| | 16 | 0† | | 15·64 | 528·7 | 62·5 | 661·5 | 61·9 | W |
| | 17 | 0† | | 16·05 | 525·9 | 62·1 | 645·2 | 61·2 | W |
| | 18 | 0† | | 17·12 | 522·2 | 61·7 | 640·4 | 60·5 | W |
| | 19 | 0† | | 19·59 | 523·0 | 61·3 | 635·5 | 60·0 | B |
| | 20 | 0 | | 17·33 | 521·7 | 60·9 | 652·1 | 60·0 | B |

DECLINATION. Magnet untouched, May 29d—Aug. 4d.

BIFILAR. Observed 2m after the Declination, $k$=0·000140. BALANCE. Observed 3m after the Declination, $k$=0·0000085.

† Extra Observations made.

| Göttingen Mean Time of Declination Obs. | Declination. | Bifilar. Corrected. | Bifilar. Thermometer. | Balance. Corrected. | Balance. Thermometer. | Observer's Initial. |
|---|---|---|---|---|---|---|
| d. h. m. | ° ′ | Sc. Div. | ° | Mic. Div. | ° | |
| 8 21 0 | 25 16·32 | 512·4 | 60·7 | 651·2 | 60·1 | H |
| 22 0 | 15·74 | 512·6 | 60·6 | 657·1 | 60·2 | H |
| 23 0 | 16·95 | 511·7 | 60·6 | 651·8 | 60·3 | B |
| 9 0 3 | 17·19 | 517·1 | 60·6 | 675·8 | 60·7 | B |
| 1 0 | 17·81 | 525·6 | 60·7 | 676·0 | 61·0 | H |
| 2 0 | 19·58 | 527·7 | 60·8 | 672·6 | 61·5 | H |
| 3 0 | 20·09 | 530·3 | 61·0 | 675·8 | 61·8 | B |
| 4 0 | 18·84 | 529·2 | 61·2 | 681·1 | 62·1 | H |
| 5 0 | 18·16 | 528·6 | 61·5 | 689·7 | 62·3 | H |
| 6 0 | 18·28 | 533·2 | 61·8 | 690·4 | 62·5 | W |
| 7 0 | 16·93 | 541·5 | 62·0 | 687·2 | 62·8 | W |
| 8 0 | 16·89 | 547·0 | 62·1 | 687·0 | 63·0 | W |
| 9 0 | 16·82 | 539·1 | 62·3 | 688·8 | 62·8 | W |
| 10 0 | 16·75 | 536·9 | 62·3 | 674·8 | 62·5 | W |
| 11 0 | 16·21 | 533·8 | 62·2 | 676·9 | 62·2 | H |
| 12 0 | 16·92 | 537·6 | 62·0 | 669·3 | 61·8 | H |
| 13 0 | 25 15·88 | 534·4 | 61·7 | 660·8 | 61·5 | H |
| 14 0† | 10·03 | 524·8 | 61·4 | 650·8 | 61·0 | H |
| 15 0† | 12·11 | 524·9 | 61·1 | 647·6 | 60·6 | H |
| 16 0 | 18·14 | 525·9 | 60·8 | 647·7 | 60·2 | H |
| 17 0 | 15·38 | 527·8 | 60·5 | 646·4 | 59·6 | H |
| 18 0 | 13·00 | 529·6 | 60·1 | 656·6 | 59·0 | H |
| 19 0 | 14·23 | 530·1 | 59·7 | 661·4 | 58·5 | W |
| 20 0 | 11·91 | 524·9 | 59·3 | 671·5 | 58·5 | W |
| 21 2 | 14·51 | 518·1 | 59·1 | 673·0 | 58·5 | B |
| 22 0 | 15·47 | 518·7 | 59·0 | 673·6 | 58·8 | W |
| 23 0 | 17·24 | 523·8 | 59·0 | 669·0 | 59·4 | W |
| 10 0 0 | 17·80 | 531·4 | 59·4 | 668·2 | 60·2 | W |
| 1 0 | 17·60 | 529·7 | 59·9 | 663·3 | 61·4 | W |
| 2 0 | 17·53 | 528·1 | 60·6 | 676·7 | 62·3 | W |
| 3 0 | 18·18 | 530·6 | 61·2 | 671·5 | 62·5 | W |
| 4 0 | 18·81 | 533·7 | 61·6 | 677·0 | 62·6 | W |
| 5 0 | 18·13 | 537·8 | 61·7 | 690·5 | 62·5 | W |
| 6 0 | 17·68 | 542·6 | 61·7 | 687·2 | 62·5 | H |
| 7 0† | 16·80 | 538·3 | 61·6 | 684·3 | 62·2 | H |
| 8 0 | 16·70 | 540·4 | 61·5 | 677·1 | 62·1 | H |
| 9 0 | 16·82 | 538·6 | 61·5 | 676·9 | 62·0 | H |
| 10 0 | 16·50 | 535·3 | 61·4 | 670·9 | 61·7 | H |
| 11 0 | 16·68 | 533·9 | 61·2 | 664·6 | 61·5 | B |
| 12 0 | 16·35 | 533·5 | 61·0 | 660·6 | 61·2 | B |
| 13 0 | 25 16·63 | 535·0 | 60·9 | 658·9 | 60·9 | B |
| 14 0 | 15·96 | 531·8 | 60·8 | 659·0 | 60·5 | B |
| 15 0 | 15·44 | 534·6 | 60·6 | 656·0 | 60·1 | B |
| 16 0 | 14·92 | 532·1 | 60·3 | 659·9 | 59·8 | B |
| 17 0 | 13·41 | 533·8 | 60·0 | 656·8 | 59·4 | B |
| 18 0 | 11·51 | 531·3 | 59·8 | 666·0 | 59·1 | B |
| 19 0 | 11·22 | 528·0 | 59·5 | 677·8 | 59·2 | H |
| 20 0 | 12·45 | 523·3 | 59·5 | 685·2 | 59·2 | H |
| 21 0 | 13·64 | 521·8 | 59·5 | 680·7 | 59·4 | W |
| 22 0 | 14·91 | 515·3 | 59·4 | 673·0 | 59·6 | H |
| 23 0 | 16·90 | 513·5 | 59·5 | 666·4 | 60·1 | H |
| 11 0 0 | 20·05 | 514·6 | 59·8 | 655·7 | 60·6 | H |
| 1 0 | 20·20 | 528·4 | 60·0 | 654·1 | 61·0 | H |
| 2 0 | 20·79 | 536·0 | 60·2 | 662·0 | 61·1 | H |
| 3 0 | 21·21 | 534·7 | 60·4 | 665·4 | 61·3 | H |
| 4 0 | 20·63 | 533·7 | 60·7 | 667·8 | 61·7 | H |

| Göttingen Mean Time of Declination Obs. | Declination. | Bifilar. Corrected. | Bifilar. Thermometer. | Balance. Corrected. | Balance. Thermometer. | Observer's Initial. |
|---|---|---|---|---|---|---|
| d. h. m. | ° ′ | Sc. Div. | ° | Mic. Div. | ° | |
| 11 5 0 | 25 18·85 | 535·6 | 61·0 | 653·3 | 62·2 | H |
| 6 0 | 18·10 | 543·9 | 61·3 | 661·9 | 62·5 | B |
| 7 0 | 17·06 | 543·5 | 61·7 | 660·2 | 62·8 | B |
| 8 0 | 17·33 | 543·5 | 62·0 | 664·9 | 63·0 | B |
| 9 0 | 16·82 | 544·2 | 62·3 | 664·9 | 63·2 | B |
| 10 0 | 16·50 | 539·0 | 62·4 | 661·2 | 62·9 | B |
| 11 0 | 15·44 | 537·0 | 62·2 | 661·4 | 62·4 | W |
| 12 0 | 15·45 | 535·9 | 61·9 | 656·4 | 61·7 | W |
| 13 0 | 25 13·32 | 531·8 | 61·5 | 655·6 | 61·0 | W |
| 14 0 | 14·96 | 534·6 | 61·0 | 655·8 | 60·5 | W |
| 15 0† | 16·21 | 531·0 | 60·7 | 654·2 | 60·0 | W |
| 16 0† | 18·48 | 540·3 | 60·3 | 641·3 | 59·5 | W |
| 17 0 | 13·84 | 534·7 | 60·0 | 644·4 | 59·0 | W |
| 18 0 | 14·24 | 535·5 | 59·7 | 646·3 | 58·5 | W |
| 19 0 | 11·62 | 533·5 | 59·3 | 647·5 | 58·4 | B |
| 20 0 | 15·32 | 529·3 | 59·0 | 648·8 | 58·3 | B |
| 21 0 | 16·18 | 527·9 | 58·9 | 650·6 | 58·3 | H |
| 22 0 | 15·15 | 520·0 | 58·8 | 652·8 | 58·5 | H |
| 23 0 | 16·52 | 517·3 | 58·8 | 660·3 | 58·9 | B |
| 12 0 0 | 17·27 | 525·2 | 58·9 | 656·3 | 59·5 | H |
| 1 0 | 18·74 | 529·0 | 59·1 | 658·4 | 59·9 | H |
| 2 0 | 20·25 | 534·9 | 59·3 | 651·1 | 60·2 | H |
| 3 0 | 18·63 | 537·8 | 59·7 | 651·3 | 60·6 | H |
| 4 0 | 18·70 | 537·4 | 60·0 | 663·6 | 61·0 | H |
| 5 0 | 17·60 | 541·0 | 60·3 | 668·9 | 61·2 | B |
| 6 0 | 16·15 | 542·5 | 60·6 | 676·0 | 61·5 | W |
| 7 0 | 16·16 | 546·1 | 60·7 | 673·2 | 61·5 | W |
| 8 0 | 16·15 | 543·3 | 60·8 | 670·3 | 61·4 | W |
| 9 0 | 16·21 | 539·2 | 60·8 | 670·3 | 61·2 | W |
| 10 0 | 16·21 | 538·2 | 60·7 | 664·8 | 60·7 | W |
| 11 0 | 16·16 | 535·2 | 60·3 | 660·9 | 60·3 | H |
| 12 0 | 15·59 | 533·5 | 60·0 | 662·6 | 59·9 | H |
| 13 0 | 25 15·78 | 535·5 | 59·8 | 661·2 | 59·4 | H |
| 14 0 | 14·78 | 534·7 | 59·4 | 660·8 | 58·7 | H |
| 15 0 | 14·17 | 533·7 | 59·0 | 663·9 | 58·1 | H |
| 16 0 | 14·04 | 531·4 | 58·6 | 674·7 | 57·5 | H |
| 17 0 | 15·36 | 530·4 | 58·2 | 676·4 | 56·9 | H |
| 18 0 | 16·89 | 536·2 | 57·8 | 664·6 | 56·5 | H |
| 19 0 | 13·32 | 539·5 | 57·3 | 653·2 | 56·0 | W |
| 20 0† | 10·16 | 536·7 | 56·9 | 644·6 | 55·7 | W |
| 21 0 | 13·46 | 528·1 | 56·7 | 660·1 | 55·8 | B |
| 22 0 | 15·79 | 520·2 | 56·7 | 654·5 | 56·0 | W |
| 23 0 | 19·53 | 519·3 | 56·6 | 655·7 | 56·2 | W |
| 13 0 0 | 21·29 | 525·1 | 56·6 | 640·5 | 56·4 | W |
| 1 0 | 21·48 | 543·4 | 56·6 | 632·5 | 56·5 | W |
| 2 0 | 21·86 | 537·1 | 56·7 | 640·4 | 57·0 | W |
| 3 0† | 21·59 | 543·2 | 56·9 | 660·7 | 57·5 | W |
| 4 0† | 22·35 | 520·9 | 57·1 | 691·4 | 57·7 | W |
| 5 0 | 19·71 | 535·7 | 57·3 | 676·5 | 57·9 | W |
| 6 0† | 17·87 | 538·1 | 57·4 | 685·4 | 58·0 | H |
| 7 0† | 17·63 | 539·8 | 57·5 | 678·1 | 57·8 | H |
| 8 0† | 13·88 | 543·3 | 57·4 | 679·1 | 57·5 | H |
| 9 0 | 13·72 | 540·3 | 57·4 | 682·6 | 57·5 | H |
| 10 0 | 16·82 | 540·4 | 57·3 | 673·1 | 57·3 | H |
| 11 0 | 15·64 | 545·3 | 57·3 | 656·3 | 57·5 | B |
| 12 0 | 15·41 | 538·6 | 57·3 | 661·2 | 57·8 | B |

DECLINATION. Magnet untouched, May 29d—Aug. 4d.

BIFILAR. Observed 2m after the Declination, $k$=0·000140. BALANCE. Observed 3m after the Declination, $k$=0·0000085.

† Extra Observations made.

| Göttingen Mean Time of Declination Obs. | Declination. | Bifilar. Corrected. | Bifilar. Thermometer. | Balance. Corrected. | Balance. Thermometer. | Observer's Initial. |
|---|---|---|---|---|---|---|
| d. h. m. | ° ′ | Sc. Div. | ° | Mic. Div. | ° | |
| 14 13 0 | 25 14·82 | 533·3 | 57·0 | 656·1 | 56·9 | W |
| 14 0 | 14·23 | 531·8 | 56·8 | 670·1 | 56·6 | W |
| 15 0 | 14·13 | 532·0 | 56·6 | 667·5 | 56·2 | W |
| 16 0 | 14·04 | 531·7 | 56·3 | 670·6 | 55·7 | W |
| 17 0 | 14·18 | 530·3 | 55·9 | 672·9 | 55·0 | W |
| 18 0 | 14·15 | 534·2 | 55·6 | 672·0 | 54·9 | W |
| 19 0 | 12·29 | 534·1 | 55·5 | 668·9 | 54·9 | B |
| 20 0 | 10·75 | 533·7 | 55·4 | 668·8 | 54·9 | B |
| 21 0 | 12·36 | 524·6 | 55·2 | 666·7 | 55·0 | H |
| 22 0 | 13·84 | 519·7 | 55·0 | 666·7 | 55·2 | H |
| 23 0 | 18·52 | 521·8 | 55·0 | 663·7 | 55·3 | H |
| 15 0 0 | 22·27 | 527·4 | 55·1 | 653·2 | 55·6 | B |
| 1 0 | 24·93 | 533·0 | 55·3 | 645·8 | 56·1 | H |
| 2 0 | 23·96 | 540·9 | 55·8 | 648·3 | 57·0 | B |
| 3 0 | 23·41 | 539·5 | 56·3 | 651·4 | 57·7 | H |
| 4 0 | 21·88 | 541·9 | 56·8 | 664·0 | 58·3 | H |
| 5 0 | 20·36 | 547·3 | 57·3 | 667·7 | 59·0 | H |
| 6 0 | 18·30 | 547·9 | 57·9 | 690·5 | 59·5 | W |
| 7 0 | 16·08 | 548·6 | 58·4 | 697·2 | 59·9 | W |
| 8 0 | 15·22 | 554·6 | 58·9 | 690·0 | 60·5 | W |
| 9 0 | 14·13 | 544·2 | 59·2 | 689·6 | 60·5 | W |
| 10 0 | 15·65 | 540·2 | 59·3 | 675·5 | 60·0 | W |
| 11 0 | 16·08 | 538·3 | 59·1 | 666·8 | 59·5 | H |
| 12 0 | 15·07 | 537·1 | 58·8 | 658·1 | 58·8 | H |
| 13 0† | 25 15·56 | 532·6 | 58·4 | 654·8 | 58·2 | H |
| 14 0† | 12·82 | 536·2 | 58·0 | 631·5 | 57·6 | H |
| 15 0 | 10·92 | 528·1 | 57·6 | 645·3 | 57·0 | H |
| 16 0 | 13·61 | 529·6 | 57·1 | 659·7 | 56·4 | H |
| 17 0 | 13·10 | 529·1 | 56·7 | 668·3 | 55·8 | H |
| 18 0 | 11·30 | 527·6 | 56·2 | 674·2 | 55·5 | H |
| 19 0 | 10·74 | 527·5 | 56·1 | 689·5 | 55·5 | W |
| 20 0 | 11·93 | 525·5 | 56·0 | 688·6 | 55·4 | W |
| 21 2 | 12·45 | 523·8 | 55·9 | 677·7 | 55·6 | B |
| 22 0 | 13·52 | 519·6 | 55·8 | 667·4 | 56·1 | W |
| 23 0 | 17·07 | 516·0 | 56·0 | 666·1 | 56·8 | W |
| 16 0 0 | 21·06 | 521·3 | 56·5 | 656·6 | 57·8 | W |
| 1 0 | 23·39 | 538·6 | 57·0 | 648·9 | 58·8 | W |
| 2 0 | 24·32 | 534·7 | 57·8 | 652·6 | 60·0 | W |
| 3 0 | 22·57 | 539·8 | 58·7 | 656·5 | 61·2 | W |
| 4 0 | 20·29 | 538·2 | 59·7 | 663·8 | 62·5 | W |
| 5 0 | 18·50 | 540·1 | 60·7 | 657·5 | 63·3 | W |
| 6 0 | 17·31 | 544·5 | 61·5 | 660·5 | 64·1 | H |
| 7 0 | 16·12 | 541·8 | 62·1 | 663·1 | 64·5 | H |
| 8 0 | 16·15 | 542·7 | 62·7 | 661·7 | 64·7 | H |
| 9 0 | 16·82 | 541·8 | 63·0 | 653·9 | 64·6 | H |
| 10 0 | 16·15 | 539·7 | 63·1 | 651·9 | 64·1 | H |
| 11 0 | 16·05 | 536·3 | 63·0 | 658·2 | 63·5 | B |
| 12 0† | 16·86 | 541·9 | 62·7 | 654·9 | 63·3 | B |
| 13 0† | 25 16·82 | 549·8 | 62·3 | 618·0 | 62·4 | B |
| 14 0† | 10·09 | 528·0 | 61·8 | 608·9 | 61·5 | B |
| 15 0† | 11·54 | 525·5 | 61·3 | 624·6 | 60·5 | B |
| 16 0 | 13·64 | 533·4 | 60·7 | 633·4 | 69·5 | B |
| 17 0 | 13·69 | 532·3 | 60·0 | 646·2 | 58·3 | B |
| 18 0 | 12·83 | 529·5 | 59·3 | 657·7 | 57·6 | B |
| 19 0 | 12·16 | 528·2 | 59·0 | 674·3 | 57·5 | H |
| 20 0 | 12·75 | 527·3 | 58·7 | 667·3 | 57·5 | H |

| Göttingen Mean Time of Declination Obs. | Declination. | Bifilar. Corrected. | Bifilar. Thermometer. | Balance. Corrected. | Balance. Thermometer. | Observer's Initial. |
|---|---|---|---|---|---|---|
| d. h. m. | ° ′ | Sc. Div. | ° | Mic. Div. | ° | |
| 16 21 0 | 25 15·02 | 523·1 | 58·4 | 664·4 | 57·7 | W |
| 22 0 | 16·08 | 521·6 | 58·2 | 652·4 | 58·1 | H |
| 23 0 | 19·93 | 513·4 | 58·2 | 654·1 | 58·8 | H |
| 17 0 0 | 23·43 | 522·3 | 58·6 | 649·6 | 59·7 | H |
| 1 0 | 23·21 | 526·7 | 59·0 | 649·5 | 60·5 | H |
| 2 0 | 23·25 | 533·0 | 59·6 | 651·3 | 61·1 | H |
| 3 0 | 22·91 | 535·0 | 60·2 | 654·3 | 62·0 | H |
| 4 0 | 20·92 | 538·0 | 60·8 | 659·3 | 62·6 | H |
| 5 0 | 19·66 | 541·2 | 61·3 | 664·4 | 63·2 | H |
| 6 0 | 18·57 | 539·2 | 61·9 | 663·6 | 63·3 | B |
| 7 0 | 18·13 | 548·3 | 62·0 | 653·3 | 63·0 | B |
| 8 0 | 17·20 | 547·7 | 62·0 | 654·5 | 62·7 | B |
| 9 0 | 15·25 | 536·3 | 61·9 | 664·8 | 62·4 | B |
| 10 0 | 13·49 | 541·5 | 61·7 | 653·9 | 62·0 | B |
| 11 0† | 09·71 | 539·5 | 61·4 | 644·4 | 61·5 | W |
| 12 0† | 09·54 | 531·0 | 61·0 | 634·4 | 61·1 | W |
| 13 0† | 25 08·16 | 524·3 | 60·8 | 635·6 | 60·7 | W |
| 14 0† | 20·58 | 535·5 | 60·5 | 592·8 | 60·4 | W |
| 15 0† | 14·94 | 534·2 | 60·2 | 618·6 | 60·0 | W |
| 16 0 | 12·87 | 533·5 | 60·0 | 629·7 | 59·6 | W |
| 17 0 | 11·64 | 530·1 | 59·7 | 648·7 | 59·1 | W |
| 18 0 | 10·25 | 530·9 | 59·3 | 652·6 | 58·7 | W |
| 19 0 | 11·19 | 526·8 | 59·1 | 649·7 | 58·5 | B |
| 20 0 | 11·27 | 526·7 | 58·9 | 652·4 | 58·3 | B |
| 21 0 | 10·90 | 518·2 | 58·7 | 659·5 | 58·5 | H |
| 22 0 | 17·96 | 512·3 | 58·7 | 662·4 | 58·9 | H |
| 23 0 | 17·61 | 516·7 | 58·8 | 651·7 | 59·5 | H |
| 18 0 0 | 19·88 | 515·6 | 59·1 | 644·0 | 60·5 | H |
| 1 0† | 23·52 | 523·3 | 59·8 | 640·4 | 61·5 | H |
| 2 0 | 26·81 | 531·1 | 60·5 | 634·3 | 62·6 | H |
| 3 0 | 23·39 | 524·1 | 61·4 | 639·8 | 63·6 | H |
| 4 0 | 21·14 | 538·6 | 62·2 | 646·2 | 64·0 | B |
| 5 0 | 18·95 | 544·7 | 62·7 | 657·4 | 64·2 | B |
| 6 0 | 18·05 | 539·5 | 62·8 | 670·4 | 63·9 | W |
| 7 0 | 17·02 | 542·1 | 62·8 | 673·7 | 63·5 | W |
| 8 0 | 15·32 | 543·3 | 62·7 | 679·1 | 63·1 | W |
| 9 0 | 12·04 | 535·3 | 62·4 | 680·6 | 62·7 | W |
| 10 0 | 09·76 | 530·7 | 62·1 | 664·1 | 62·4 | W |
| 11 0 | 12·75 | 533·4 | 61·9 | 651·5 | 62·0 | H |
| 12 0 | 12·67 | 533·1 | 61·5 | 644·3 | 61·0 | B |
| 13 0 | 25 14·44 | 529·4 | 61·1 | 651·5 | 61·2 | B |
| 14 0 | 15·17 | 530·0 | 60·7 | 651·3 | 60·7 | B |
| 15 0 | 15·36 | 531·2 | 60·3 | 646·6 | 60·0 | B |
| 16 0 | 16·19 | 530·5 | 59·9 | 648·8 | 59·5 | B |
| 17 0 | 14·80 | 527·6 | 59·5 | 655·2 | 59·0 | B |
| 18 0 | 13·43 | 530·6 | 59·0 | 659·0 | 58·4 | B |
| 19 0 | 10·70 | 525·3 | 58·6 | 668·3 | 58·0 | W |
| 20 0 | 11·21 | 520·3 | 58·2 | 663·0 | 57·7 | W |
| 21 0 | 11·72 | 515·7 | 58·0 | 652·9 | 57·5 | H |
| 22 0 | 13·69 | 511·4 | 57·9 | 652·0 | 57·5 | W |
| 23 0 | 16·95 | 510·4 | 57·8 | 646·6 | 57·6 | H |
| 19 0 0 | 20·62 | 516·0 | 57·9 | 651·3 | 58·1 | W |
| 1 0 | 22·30 | 522·4 | 58·0 | 653·2 | 58·5 | H |
| 2 0 | 23·24 | 532·1 | 58·5 | 653·4 | 58·9 | W |
| 3 0 | 22·11 | 547·4 | 58·9 | 655·1 | 59·5 | W |
| 4 0 | 18·72 | 543·4 | 59·5 | 666·3 | 60·0 | W |

DECLINATION. Magnet untouched, May 29d—Aug. 4d.

BIFILAR. Observed 2m after the Declination, $k=0{\cdot}000140$. BALANCE. Observed 3m after the Declination, $k=0{\cdot}0000085$.

† Extra Observations made.

July 18d 12h. A cover put over the case of the balance magnetometer, composed of four folds of thick cotton cloth.

| Göttingen Mean Time of Declination Obs. | | | Declination. | | Bifilar. | | Balance. | | Observer's Initial. |
|---|---|---|---|---|---|---|---|---|---|
| | | | | | Corrected. | Thermometer. | Corrected. | Thermometer. | |
| d. | h. | m. | ° ′ | | Sc. Div. | ° | Mic. Div. | ° | |
| 19 | 5 | 0 | 25 | 17·27 | 540·9 | 60·0 | 666·4 | 60·7 | W |
| | 6 | 0 | | 16·57 | 540·6 | 60·6 | 668·5 | 61·2 | B |
| | 7 | 2 | | 15·32 | 542·6 | 60·9 | 669·1 | 61·4 | B |
| | 8 | 0 | | 16·08 | 538·7 | 61·0 | 666·9 | 61·5 | W |
| | 9 | 0 | | 16·35 | 539·1 | 61·0 | 661·2 | 61·4 | W |
| | 10 | 0 | | 16·01 | 537·9 | 60·9 | 655·9 | 61·2 | W |
| | 11 | 0 | | 15·85 | 537·0 | 60·7 | 650·6 | 60·7 | H |
| | 12 | 0 | | 15·11 | 536·1 | 60·3 | 647·5 | 60·4 | H |
| | 13 | 0 | 25 | 14·35 | 534·1 | 60·0 | 647·6 | 60·2 | H |
| | 14 | 0 | | 14·38 | 533·3 | 59·7 | 648·4 | 59·7 | H |
| | 15 | 0 | | 14·33 | 533·4 | 59·3 | 650·4 | 59·3 | H |
| | 16 | 0 | | 15·85 | 531·6 | 59·0 | 654·4 | 58·9 | H |
| | 17 | 0 | | 13·59 | 532·0 | 58·7 | 663·2 | 58·4 | H |
| | 18 | 0 | | 11·27 | 530·3 | 58·4 | 663·8 | 58·0 | H |
| | 19 | 0 | | 10·16 | 527·9 | 58·2 | 667·3 | 57·8 | B |
| | 20 | 0 | | 11·14 | 523·2 | 58·0 | 666·1 | 57·5 | W |
| | 21 | 0 | | 12·85 | 521·8 | 57·8 | 661·3 | 57·5 | W |
| | 22 | 0 | | 15·52 | 519·7 | 57·8 | 666·0 | 57·8 | W |
| | 23 | 0 | | 17·49 | 518·5 | 57·9 | 657·6 | 58·2 | W |
| 20 | 0 | 0 | | 20·65 | 522·5 | 58·2 | 653·7 | 58·8 | W |
| | 1 | 0 | | 21·50 | 525·0 | 58·8 | 651·6 | 59·5 | W |
| | 2 | 0 | | 22·44 | 535·9 | 59·4 | 641·2 | 60·2 | W |
| | 3 | 0 | | 21·74 | 539·7 | 60·1 | 637·0 | 61·0 | W |
| | 4 | 0 | | 19·95 | 543·2 | 61·0 | 646·6 | 62·0 | W |
| | 5 | 0 | | 19·37 | 546·3 | 61·9 | 653·1 | 62·9 | W |
| | 6 | 0 | | 17·63 | 542·8 | 62·8 | 650·5 | 63·6 | H |
| | 7 | 0 | | 17·36 | 543·4 | 63·5 | 645·2 | 64·3 | H |
| | 8 | 0 | | 15·76 | 543·5 | 64·1 | 646·9 | 64·6 | H |
| | 9 | 2 | | 16·12 | 543·4 | 64·2 | 650·1 | 64·5 | H |
| | 10 | 0 | | 16·21 | 543·8 | 64·1 | 647·1 | 64·2 | H |
| | 11 | 0 | | 14·20 | 540·8 | 63·8 | 647·8 | 63·7 | W |
| | 12 | 0 | | 14·71 | 538·1 | 63·3 | 647·2 | 63·2 | W |
| 21 | 13 | 0 | 25 | 13·94 | 535·4 | 59·8 | 658·0 | 59·9 | H |
| | 14 | 0 | | 13·63 | 537·7 | 59·8 | 652·5 | 60·0 | H |
| | 15 | 0 | | 13·12 | 537·8 | 59·8 | 643·7 | 60·1 | H |
| | 16 | 0 | | 12·62 | 535·5 | 59·9 | 647·3 | 60·2 | H |
| | 17 | 0 | | 12·80 | 533·4 | 59·9 | 648·3 | 60·2 | H |
| | 18 | 0 | | 12·48 | 533·6 | 59·9 | 644·9 | 60·2 | H |
| | 19 | 0 | | 11·49 | 531·1 | 59·9 | 649·9 | 60·2 | W |
| | 20 | 0 | | 10·68 | 528·8 | 60·0 | 652·2 | 60·2 | W |
| | 21 | 0 | | 12·13 | 525·5 | 60·0 | 654·5 | 60·5 | W |
| | 22 | 0 | | 12·95 | 523·2 | 60·3 | 645·9 | 60·8 | W |
| | 23 | 0 | | 14·87 | 521·3 | 60·8 | 646·1 | 61·4 | W |
| 22 | 0 | 0 | | 17·06 | 522·4 | 61·3 | 641·1 | 62·2 | W |
| | 1 | 0 | | 18·32 | 522·8 | 62·1 | 637·7 | 63·1 | W |
| | 2 | 0 | | 18·61 | 526·8 | 63·0 | 639·4 | 64·2 | W |
| | 3 | 0 | | 17·42 | 530·9 | 63·9 | 638·7 | 65·3 | W |
| | 4 | 0 | | 16·55 | 535·1 | 64·9 | 634·0 | 66·4 | W |
| | 5 | 0 | | 16·13 | 538·7 | 66·0 | 648·2 | 67·4 | W |
| | 6 | 3 | | 16·15 | 541·1 | 67·0 | 653·7 | 68·2 | D |
| | 7 | 0 | | 16·82 | 542·3 | 67·9 | 656·7 | 69·0 | D |
| | 8 | 0 | | 17·24 | 544·2 | 68·7 | 651·3 | 69·5 | D |
| | 9 | 0 | | 17·31 | 540·1 | 69·3 | 653·6 | 69·9 | D |
| | 10 | 0 | | 16·10 | 535·0 | 69·5 | 650·8 | 69·5 | H |
| | 11 | 0 | | 14·73 | 531·8 | 69·5 | 652·1 | 69·5 | W |
| | 12 | 0 | | 14·80 | 534·6 | 69·0 | 644·8 | 69·0 | W |

| Göttingen Mean Time of Declination Obs. | | | Declination. | | Bifilar. | | Balance. | | Observer's Initial. |
|---|---|---|---|---|---|---|---|---|---|
| | | | | | Corrected. | Thermometer. | Corrected. | Thermometer. | |
| d. | h. | m. | ° ′ | | Sc. Div. | ° | Mic. Div. | ° | |
| 22 | 13 | 0 | 25 | 14·77 | 534·9 | 68·6 | 644·9 | 68·4 | W |
| | 14 | 0 | | 14·67 | 534·8 | 67·9 | 642·9 | 67·6 | W |
| | 15 | 0 | | 13·97 | 533·5 | 67·3 | 646·3 | 67·0 | W |
| | 16 | 0 | | 14·08 | 533·0 | 66·7 | 649·2 | 66·1 | W |
| | 17 | 0 | | 14·04 | 532·2 | 66·0 | 657·9 | 65·4 | W |
| | 18 | 0 | | 12·78 | 533·1 | 65·5 | 660·6 | 64·5 | W |
| | 19 | 0 | | 12·09 | 532·2 | 65·0 | 661·6 | 64·0 | H |
| | 20 | 0 | | 12·29 | 529·2 | 64·5 | 665·0 | 63·6 | H |
| | 21 | 0 | | 14·17 | 525·3 | 64·0 | 660·9 | 63·5 | H |
| | 22 | 0 | | 16·87 | 523·4 | 63·9 | 653·1 | 63·5 | H |
| | 23 | 0 | | 18·47 | 523·0 | 63·8 | 650·2 | 63·9 | H |
| 23 | 0 | 0 | | 20·85 | 523·8 | 64·2 | 640·1 | 65·0 | H |
| | 1 | 0 | | 21·27 | 528·4 | 65·0 | 636·6 | 66·2 | H |
| | 2 | 0 | | 22·57 | 531·3 | 66·2 | 636·9 | 67·7 | H |
| | 3 | 0 | | 21·56 | 537·8 | 67·4 | 632·0 | 69·0 | H |
| | 4 | 0 | | 20·50 | 538·1 | 68·5 | 631·3 | 70·0 | H |
| | 5 | 0 | | 18·79 | 535·3 | 69·7 | 641·9 | 70·8 | H |
| | 6 | 0 | | 17·73 | 535·5 | 70·3 | 638·9 | 71·5 | W |
| | 7 | 0 | | 17·96 | 538·8 | 71·0 | 644·9 | 72·0 | W |
| | 8 | 0 | | 18·16 | 539·1 | 71·5 | 650·7 | 72·4 | W |
| | 9 | 0 | | 15·76 | 539·2 | 71·7 | 656·3 | 72·5 | W |
| | 10 | 0 | | 16·08 | 536·4 | 71·7 | 652·5 | 72·3 | W |
| | 11 | 0 | | 16·36 | 536·0 | 71·4 | 648·9 | 72·0 | H |
| | 12 | 0 | | 15·47 | 534·4 | 71·1 | 646·4 | 71·5 | H |
| | 13 | 0 | 25 | 15·49 | 534·5 | 70·9 | 646·6 | 71·2 | H |
| | 14 | 0 | | 15·17 | 532·3 | 70·7 | 645·4 | 70·7 | H |
| | 15 | 0 | | 15·07 | 532·0 | 70·2 | 645·7 | 70·2 | H |
| | 16 | 0 | | 14·73 | 533·2 | 69·9 | 651·1 | 69·8 | H |
| | 17 | 0 | | 15·51 | 531·6 | 69·4 | 646·4 | 69·3 | H |
| | 18 | 0 | | 12·72 | 530·5 | 69·0 | 650·2 | 68·9 | H |
| | 19 | 0 | | 12·63 | 529·7 | 68·8 | 654·1 | 68·5 | W |
| | 20 | 0 | | 12·11 | 529·7 | 68·6 | 658·0 | 68·2 | W |
| | 21 | 0 | | 11·64 | 528·5 | 68·4 | 660·7 | 68·0 | W |
| | 22 | 0 | | 12·31 | 525·1 | 68·2 | 654·5 | 68·0 | W |
| | 23 | 0 | | 14·77 | 522·2 | 68·1 | 647·4 | 68·0 | W |
| 24 | 0 | 0 | | 19·24 | 519·8 | 68·0 | 640·3 | 67·8 | W |
| | 1 | 0 | | 21·53 | 521·1 | 67·8 | 638·7 | 67·7 | W |
| | 2 | 0 | | 22·24 | 523·7 | 67·7 | 649·8 | 67·6 | W |
| | 3 | 0 | | 20·77 | 532·9 | 67·7 | 650·9 | 67·7 | W |
| | 4 | 0 | | 20·38 | 539·2 | 67·7 | 649·2 | 67·9 | W |
| | 5 | 0 | | 18·79 | 533·8 | 67·8 | 660·1 | 68·0 | W |
| | 6 | 0 | | 17·26 | 534·3 | 67·9 | 661·4 | 68·2 | H |
| | 7 | 0 | | 16·39 | 540·8 | 68·0 | 654·9 | 68·2 | H |
| | 8 | 0 | | 16·80 | 538·5 | 68·0 | 653·1 | 68·3 | W |
| | 9 | 0 | | 16·50 | 537·8 | 68·0 | 657·0 | 68·3 | H |
| | 10 | 0 | | 15·78 | 539·0 | 68·0 | 655·4 | 68·2 | W |
| | 11 | 0 | | 15·69 | 536·5 | 68·0 | 657·8 | 68·2 | W |
| | 12 | 0 | | 15·47 | 535·6 | 67·9 | 655·9 | 68·1 | W |
| | 13 | 0 | 25 | 14·80 | 534·9 | 67·9 | 655·0 | 68·0 | D |
| | 14 | 0 | | 13·93 | 540·6 | 67·8 | 647·4 | 67·7 | D |
| | 15 | 0 | | 10·95 | 540·5 | 67·7 | 649·7 | 67·7 | D |
| | 16 | 0 | | 10·11 | 539·8 | 67·4 | 645·8 | 67·4 | D |
| | 17 | 0 | | 10·90 | 545·6 | 67·2 | 644·1 | 67·4 | D |
| | 18 | 0 | | 08·31 | 539·3 | 67·0 | 644·9 | 67·0 | B |
| | 19 | 0 | | 13·02 | 538·2 | 66·7 | 611·8 | 66·7 | B |
| | 20 | 0 | | 16·36 | 519·0 | 66·5 | 629·4 | 66·5 | B |

DECLINATION. Magnet untouched, May 29d—Aug. 4d.

BIFILAR. Observed 2m after the Declination, $k = 0{\cdot}000140$. BALANCE. Observed 3m after the Declination $k = 0{\cdot}0000085$.

July 24d 18h +. The box of the balance magnetometer lifted and an insect removed from the needle.

| Göttingen Mean Time of Declination Obs. | | | Declination. | Bifilar. | | Balance. | | Observer's Initial. |
|---|---|---|---|---|---|---|---|---|
| | | | | Corrected. | Thermometer. | Corrected. | Thermometer. | |
| d. | h. | m. | ° ′ | Sc. Div. | ° | Mic. Div. | ° | |
| 24 | 21 | 0 | 25 23·83 | 546·1 | 66·3 | 585·8 | 66·3 | H |
| | 22 | 0 | 20·02 | 525·1 | 66·2 | 597·0 | 66·5 | H |
| | 23 | 0 | 19·12 | 529·7 | 66·2 | 599·9 | 66·8 | H |
| 25 | 0 | 0 | 22·37 | 533·3 | 66·7 | 604·1 | 67·2 | H |
| | 1 | 0 | 27·58 | 524·7 | 66·9 | 624·4 | 67·7 | H |
| | 2 | 0 | 25·51 | 517·6 | 67·3 | 663·9 | 68·0 | W |
| | 3 | 0 | 21·68 | 540·7 | 67·6 | 656·9 | 68·2 | W |
| | 4 | 0 | 24·50 | 526·8 | 67·8 | 694·9 | 68·4 | W |
| | 5 | 0 | 21·24 | 536·7 | 67·9 | 696·7 | 68·5 | B |
| | 6 | 0 | 19·46 | 543·2 | 68·2 | 719·8 | 68·8 | H |
| | 7 | 0 | 20·23 | 544·4 | 68·4 | 710·0 | 69·0 | H |
| | 8 | 0 | 08·09 | 533·5 | 68·6 | 731·2 | 69·0 | D |
| | 9 | 0 | 13·22 | 545·0 | 68·6 | 675·9 | 69·0 | D |
| | 10 | 0 | 16·03 | 538·4 | 68·6 | 666·4 | 69·0 | B |
| | 11 | 0† | 13·64 | 535·8 | 68·6 | 628·3 | 68·8 | W |
| | 12 | 0 | 15·91 | 529·5 | 68·3 | 620·5 | 68·5 | W |
| | 13 | 0† | 25 19·66 | 532·1 | 68·0 | 600·8 | 68·0 | W |
| | 14 | 0 | 12·72 | 528·8 | 67·7 | 622·1 | 67·7 | W |
| | 15 | 0 | 12·65 | 531·8 | 67·4 | 629·8 | 67·3 | W |
| | 16 | 0 | 12·18 | 525·7 | 67·0 | 638·6 | 66·9 | W |
| | 17 | 0 | 13·81 | 520·6 | 66·7 | 640·9 | 66·4 | W |
| | 18 | 0 | 14·38 | 518·9 | 66·2 | 637·3 | 65·9 | W |
| | 19 | 0 | 18·38 | 523·9 | 65·9 | 631·8 | 65·4 | B |
| | 20 | 0 | 17·80 | 522·5 | 65·6 | 625·8 | 65·0 | B |
| | 21 | 0 | 13·30 | 517·8 | 65·2 | 627·6 | 64·7 | H |
| | 22 | 0 | 15·31 | 517·6 | 65·0 | 631·0 | 64·5 | H |
| | 23 | 0 | 16·12 | 514·2 | 64·8 | 632·3 | 64·5 | H |
| 26 | 0 | 0 | 19·02 | 519·5 | 64·7 | 632·9 | 64·5 | B |
| | 1 | 0 | 19·48 | 525·6 | 64·7 | 637·0 | 64·7 | H |
| | 2 | 0 | 21·50 | 532·6 | 64·9 | 640·5 | 65·2 | B |
| | 3 | 0 | 21·16 | 529·7 | 65·4 | 644·9 | 65·8 | B |
| | 4 | 0 | 18·90 | 548·9 | 65·9 | 635·4 | 66·5 | B |
| | 5 | 0 | 19·15 | 536·3 | 66·6 | 659·5 | 67·3 | B |
| | 6 | 0 | 18·32 | 541·0 | 67·0 | 668·9 | 67·7 | W |
| | 7 | 0 | 15·99 | 546·3 | 67·4 | 672·7 | 67·9 | W |
| | 8 | 0 | 18·23 | 545·1 | 67·7 | 667·8 | 68·0 | W |
| | 9 | 0 | 17·49 | 540·4 | 67·6 | 663·9 | 68·0 | W |
| | 10 | 0 | 16·25 | 534·6 | 67·5 | 659·5 | 67·7 | W |
| | 11 | 0 | 15·91 | 539·3 | 67·2 | 646·8 | 67·5 | H |
| | 12 | 0† | 12·11 | 535·8 | 67·0 | 631·0 | 67·1 | H |
| | 13 | 0 | 25 14·35 | 531·4 | 66·8 | 625·5 | 67·0 | H |
| | 14 | 0 | 14·46 | 529·2 | 66·6 | 634·7 | 66·6 | H |
| | 15 | 0 | 14·41 | 531·0 | 66·3 | 635·9 | 66·3 | H |
| | 16 | 0 | 13·05 | 528·4 | 66·0 | 642·9 | 66·0 | H |
| | 17 | 0 | 13·16 | 531·7 | 65·8 | 643·5 | 65·5 | H |
| | 18 | 0 | 14·85 | 528·6 | 65·3 | 645·2 | 65·2 | H |
| | 19 | 0 | 17·42 | 532·6 | 65·2 | 638·8 | 64·9 | W |
| | 20 | 0 | 17·04 | 521·5 | 65·0 | 642·1 | 64·7 | W |
| | 21 | 4 | 19·19 | 516·2 | 64·9 | 631·7 | 64·7 | B |
| | 22 | 0 | 22·24 | 512·2 | 64·9 | 629·9 | 65·0 | W |
| | 23 | 0 | 21·34 | 515·5 | 65·0 | 627·1 | 65·4 | W |
| 27 | 0 | 0 | 22·03 | 514·7 | 65·6 | 616·3 | 66·1 | W |
| | 1 | 0† | 26·47 | 531·5 | 66·1 | 621·6 | 66·9 | W |
| | 2 | 0 | 21·26 | 537·1 | 66·8 | 631·6 | 67·7 | W |
| | 3 | 0 | 20·97 | 543·2 | 67·6 | 645·6 | 68·5 | W |
| | 4 | 0 | 21·19 | 554·9 | 68·4 | 666·4 | 69·3 | W |

| Göttingen Mean Time of Declination Obs. | | | Declination. | Bifilar. | | Balance. | | Observer's Initial. |
|---|---|---|---|---|---|---|---|---|
| | | | | Corrected. | Thermometer. | Corrected. | Thermometer. | |
| d. | h. | m. | ° ′ | Sc. Div. | ° | Mic. Div. | ° | |
| 27 | 5 | 0† | 25 12·73 | 544·8 | 69·0 | 715·0 | 70·0 | W |
| | 6 | 0† | 18·25 | 542·9 | 69·7 | 700·6 | 70·5 | H |
| | 7 | 0 | 18·25 | 555·1 | 70·1 | 683·3 | 71·0 | H |
| | 8 | 0 | 09·46 | 551·0 | 70·3 | 710·8 | 71·1 | H |
| | 9 | 0 | 16·95 | 536·9 | 70·5 | 678·4 | 70·9 | H |
| | 10 | 0 | 16·68 | 540·2 | 70·3 | 650·1 | 70·7 | H |
| | 11 | 0† | 14·38 | 538·9 | 70·3 | 634·8 | 70·3 | B |
| | 12 | 0 | 12·33 | 527·3 | 69·9 | 616·4 | 70·0 | B |
| 28 | 13 | 0 | 25 17·68 | 536·6 | 66·1 | 627·6 | 65·5 | W |
| | 14 | 0† | 20·90 | 535·5 | 65·7 | 603·9 | 65·0 | W |
| | 15 | 0† | 17·51 | 533·5 | 65·1 | 575·9 | 64·4 | W |
| | 16 | 0† | 12·18 | 524·2 | 64·7 | 600·9 | 63·8 | W |
| | 17 | 0 | 14·87 | 525·8 | 64·0 | 621·2 | 63·1 | W |
| | 18 | 0 | 12·73 | 530·7 | 63·6 | 629·6 | 62·5 | W |
| | 19 | 5 | 12·62 | 529·7 | 63·0 | 630·4 | 61·9 | B |
| | 20 | 0 | 12·38 | 523·8 | 62·6 | 639·4 | 61·4 | B |
| | 21 | 0 | 14·44 | 519·4 | 62·1 | 647·0 | 61·2 | H |
| | 22 | 0 | 16·08 | 514·1 | 61·9 | 641·0 | 61·2 | H |
| | 23 | 0 | 17·80 | 512·3 | 61·8 | 636·5 | 61·5 | H |
| 29 | 0 | 0 | 20·87 | 516·1 | 61·8 | 626·9 | 61·7 | B |
| | 1 | 0 | 22·84 | 523·2 | 61·9 | 623·7 | 62·2 | H |
| | 2 | 0 | 24·12 | 532·6 | 62·2 | 626·2 | 62·4 | B |
| | 3 | 0 | 22·94 | 540·4 | 62·5 | 634·5 | 62·8 | B |
| | 4 | 0 | 22·00 | 537·2 | 62·9 | 645·6 | 63·4 | W |
| | 5 | 0 | 19·44 | 539·5 | 63·4 | 651·6 | 63·8 | B |
| | 6 | 0 | 18·03 | 536·5 | 63·7 | 657·5 | 64·1 | W |
| | 7 | 0 | 14·77 | 539·1 | 64·0 | 653·1 | 64·3 | W |
| | 8 | 0 | 15·01 | 542·9 | 64·0 | 646·6 | 64·0 | W |
| | 9 | 0 | 16·19 | 537·4 | 64·0 | 644·1 | 64·1 | W |
| | 10 | 0 | 16·15 | 536·5 | 64·0 | 642·0 | 64·2 | W |
| | 11 | 0 | 15·56 | 536·4 | 63·9 | 637·7 | 64·0 | H |
| | 12 | 0 | 16·35 | 535·8 | 63·7 | 634·1 | 63·5 | H |
| | 13 | 0 | 25 15·65 | 534·1 | 63·3 | 636·4 | 63·2 | H |
| | 14 | 0 | 15·76 | 534·3 | 63·0 | 635·7 | 62·7 | H |
| | 15 | 0 | 15·11 | 533·0 | 62·7 | 636·1 | 62·1 | H |
| | 16 | 0 | 15·62 | 530·9 | 62·1 | 640·0 | 61·4 | H |
| | 17 | 0 | 12·85 | 530·0 | 61·6 | 642·5 | 60·7 | H |
| | 18 | 0 | 10·80 | 527·9 | 61·1 | 647·1 | 60·2 | H |
| | 19 | 0 | 09·37 | 525·7 | 60·6 | 642·6 | 59·6 | W |
| | 20 | 0 | 11·52 | 522·4 | 60·0 | 636·5 | 59·6 | W |
| | 21 | 0 | 12·22 | 520·9 | 59·7 | 624·2 | 58·8 | B |
| | 22 | 0 | 12·85 | 519·3 | 59·4 | 616·7 | 58·5 | W |
| | 23 | 0 | 16·79 | 513·7 | 59·1 | 627·7 | 58·5 | W |
| 30 | 0 | 0 | 18·68 | 521·4 | 59·0 | 622·7 | 58·5 | W |
| | 1 | 0 | 19·51 | 522·9 | 59·0 | 620·6 | 58·6 | W |
| | 2 | 0 | 19·78 | 529·0 | 59·0 | 616·5 | 58·8 | W |
| | 3 | 0 | 19·51 | 533·7 | 58·9 | 620·3 | 58·7 | W |
| | 4 | 0 | 18·81 | 533·5 | 58·9 | 624·4 | 58·7 | W |
| | 5 | 0 | 17·67 | 536·7 | 58·8 | 631·8 | 58·6 | W |
| | 6 | 0 | 16·28 | 540·8 | 58·8 | 634·2 | 58·6 | H |
| | 7 | 0 | 16·01 | 543·4 | 58·8 | 634·4 | 58·6 | H |
| | 8 | 0 | 15·36 | 544·2 | 58·7 | 635·3 | 58·6 | H |
| | 9 | 0 | 15·29 | 542·6 | 58·7 | 642·3 | 58·6 | H |
| | 10 | 0 | 14·99 | 542·0 | 58·6 | 640·0 | 58·5 | H |
| | 11 | 0 | 12·06 | 538·4 | 58·6 | 639·5 | 58·4 | B |
| | 12 | 0 | 12·15 | 534·7 | 58·4 | 626·6 | 58·3 | B |

DECLINATION. Magnet untouched, May 29d—Aug. 4d.

BIFILAR. Observed 2m after the Declination $k = 0{\cdot}000140$. BALANCE. Observed 3m after the Declination, $k = 0{\cdot}0000085$.

† Extra Observations made.

July 26d 2h 30m. The balance needle vibrated considerably by the accidental approach of a mass of steel, which has affected the time of vibration, and seems also to have affected the position of the needle.

| Göttingen Mean Time of Declination Obs. | | | Declination. | Bifilar. | | Balance. | | Observer's Initial. |
|---|---|---|---|---|---|---|---|---|
| | | | | Corrected. | Thermometer. | Corrected. | Thermometer. | |
| d. | h. | m. | ° ′ | Sc. Div. | ° | Mic. Div. | ° | |
| 30 | 13 | 0 | 25 12·92 | 532·9 | 58·3 | 628·7 | 58·2 | B |
| | 14 | 0 | 14·84 | 537·3 | 58·2 | 618·2 | 58·2 | B |
| | 15 | 0 | 15·52 | 532·4 | 58·1 | 620·9 | 58·1 | B |
| | 16 | 0 | 12·83 | 531·1 | 58·0 | 623·7 | 58·0 | B |
| | 17 | 0 | 13·50 | 530·0 | 57·9 | 634·1 | 57·9 | B |
| | 18 | 0 | 12·95 | 527·4 | 57·8 | 634·6 | 57·7 | B |
| | 19 | 0 | 18·34 | 527·9 | 57·7 | 619·4 | 57·5 | H |
| | 20 | 0 | 17·26 | 530·9 | 57·5 | 601·0 | 57·2 | H |
| | 21 | 0 | 15·52 | 521·1 | 57·4 | 606·5 | 57·2 | W |
| | 22 | 0 | 18·00 | 519·0 | 57·3 | 604·5 | 57·2 | H |
| | 23 | 0 | 21·41 | 519·1 | 57·3 | 612·5 | 57·8 | H |
| 31 | 0 | 0 | 22·92 | 524·0 | 57·6 | 597·5 | 58·0 | H |
| | 1 | 0 | 23·98 | 530·1 | 57·8 | 596·0 | 58·3 | H |
| | 2 | 0† | 27·42 | 559·9 | 58·2 | 597·1 | 58·7 | H |
| | 3 | 0† | 24·05 | 545·3 | 58·8 | 620·1 | 59·5 | H |
| | 4 | 0† | 25·16 | 567·7 | 59·1 | 619·7 | 59·7 | H |
| | 5 | 0† | 22·22 | 547·5 | 59·4 | 636·0 | 60·0 | H |
| | 6 | 0† | 20·30 | 544·3 | 59·7 | 632·6 | 60·1 | B |
| | 7 | 0† | 20·77 | 553·8 | 59·8 | 623·1 | 60·1 | B |
| | 8 | 0† | 13·49 | 551·9 | 59·8 | 641·1 | 60·0 | B |
| | 9 | 0† | 15·56 | 551·7 | 59·7 | 626·0 | 60·0 | B |
| | 10 | 0† | 16·03 | 537·2 | 59·7 | 629·2 | 60·0 | B |
| | 11 | 0 | 16·15 | 539·0 | 59·6 | 632·6 | 60·0 | W |
| | 12 | 0† | 14·38 | 535·7 | 59·4 | 633·3 | 59·7 | W |
| | 13 | 0† | 25 11·64 | 532·6 | 59·1 | 639·7 | 59·5 | W |
| | 14 | 0† | 10·70 | 530·0 | 59·0 | 639·8 | 59·4 | W |
| | 15 | 0 | 13·46 | 534·9 | 58·8 | 633·9 | 59·0 | W |
| | 16 | 0 | 12·78 | 533·5 | 58·7 | 633·9 | 58·7 | W |
| | 17 | 0 | 10·67 | 529·6 | 58·3 | 634·6 | 58·3 | W |
| | 18 | 0 | 10·74 | 525·1 | 58·0 | 634·0 | 58·0 | W |
| | 19 | 0 | 14·13 | 527·4 | 57·9 | 627·2 | 57·8 | B |
| | 20 | 0 | 12·60 | 524·6 | 57·8 | 624·6 | 57·6 | B |
| | 21 | 0 | 14·89 | 522·3 | 57·7 | 627·0 | 57·6 | H |
| | 22 | 0 | 17·39 | 518·9 | 57·7 | 625·0 | 57·8 | H |
| | 23 | 0 | 19·44 | 520·4 | 57·7 | 614·0 | 58·1 | H |
| 1 | 0 | 0 | 21·39 | 525·7 | 57·9 | 599·3 | 58·3 | H |
| | 1 | 0 | 24·60 | 532·7 | 58·1 | 599·8 | 58·6 | H |
| | 2 | 0 | 24·28 | 528·6 | 58·5 | 601·1 | 58·9 | B |
| | 3 | 0† | 25·09 | 541·1 | 58·8 | 599·2 | 59·3 | H |
| | 4 | 0† | 25·36 | 535·3 | 59·0 | 605·6 | 59·7 | H |
| | 5 | 0† | 26·34 | 519·9 | 59·4 | 591·3 | 60·1 | H |
| | 6 | 0† | 24·55 | 549·3 | 59·9 | 710·1 | 60·5 | W |
| | 7 | 0† | 14·04 | 575·2 | 60·0 | 746·6 | 60·7 | W |
| | 8 | 0† | 21·50 | 565·8 | 60·1 | 738·6 | 60·7 | W |
| | 9 | 0† | 11·62 | 534·3 | 60·0 | 734·9 | 60·6 | W |
| | 10 | 0† | 07·22 | 518·4 | 60·0 | 662·9 | 60·5 | W |
| | 11 | 0† | 15·74 | 533·9 | 59·9 | 644·3 | 60·4 | H |
| | 12 | 0† | 09·66 | 522·0 | 59·8 | 597·5 | 60·2 | H |
| | 13 | 0† | 25 07·25 | 518·2 | 59·7 | 495·2 | 60·2 | H |
| | 14 | 0† | 12·73 | 519·8 | 59·6 | 597·5 | 60·0 | H |
| | 15 | 0 | 16·62 | 523·2 | 59·4 | 613·8 | 59·7 | H |
| | 16 | 0 | 19·04 | 521·4 | 59·1 | 622·7 | 59·3 | H |
| | 17 | 0 | 15·25 | 525·9 | 58·9 | 615·5 | 59·0 | H |
| | 18 | 0 | 14·24 | 516·1 | 58·7 | 638·6 | 58·5 | H |
| | 19 | 0 | 19·98 | 522·5 | 58·3 | 616·9 | 58·3 | W |
| | 20 | 0 | 13·49 | 510·9 | 58·0 | 630·2 | 58·0 | W |

| Göttingen Mean Time of Declination Obs. | | | Declination. | Bifilar. | | Balance. | | Observer's Initial. |
|---|---|---|---|---|---|---|---|---|
| | | | | Corrected. | Thermometer. | Corrected. | Thermometer. | |
| d. | h. | m. | ° ′ | Sc. Div. | ° | Mic. Div. | ° | |
| 1 | 21 | 0 | 25 16·35 | 510·4 | 57·9 | 621·0 | 57·9 | B |
| | 22 | 0 | 20·55 | 499·7 | 57·8 | 629·6 | 57·9 | W |
| | 23 | 0 | 22·01 | 503·9 | 57·8 | 628·9 | 58·2 | W |
| 2 | 0 | 0 | 22·58 | 504·1 | 58·0 | 627·1 | 58·7 | W |
| | 1 | 0 | 26·57 | 511·8 | 58·6 | 628·8 | 59·1 | W |
| | 2 | 0† | 27·10 | 521·4 | 59·0 | 643·0 | 59·8 | W |
| | 3 | 0† | 26·74 | 518·9 | 59·7 | 667·6 | 60·6 | W |
| | 4 | 0 | 22·01 | 537·1 | 60·4 | 681·2 | 61·4 | W |
| | 5 | 0 | 19·41 | 528·2 | 60·9 | 680·7 | 62·0 | W |
| | 6 | 0 | 18·54 | 540·1 | 61·3 | 669·6 | 62·5 | H |
| | 7 | 0 | 15·94 | 548·0 | 62·0 | 662·7 | 62·8 | H |
| | 8 | 0 | 14·53 | 549·1 | 62·2 | 665·3 | 63·0 | H |
| | 9 | 0 | 14·08 | 544·3 | 62·2 | 667·3 | 63·0 | H |
| | 10 | 0 | 13·63 | 539·5 | 62·2 | 642·7 | 62·7 | H |
| | 11 | 0† | 14·51 | 543·4 | 62·0 | 588·9 | 62·3 | B |
| | 12 | 0† | 21·29 | 523·4 | 61·7 | 511·3 | 61·9 | B |
| | 13 | 0† | 25 14·50 | 525·5 | 61·3 | 527·0 | 61·3 | B |
| | 14 | 0† | 16·65 | 524·9 | 60·9 | 556·8 | 60·8 | B |
| | 15 | 0† | 07·37 | 517·5 | 60·4 | 556·1 | 60·0 | B |
| | 16 | 0 | 12·25 | 524·9 | 59·9 | 586·5 | 59·4 | B |
| | 17 | 0 | 13·19 | 522·6 | 59·3 | 606·1 | 58·5 | B |
| | 18 | 0 | 12·83 | 524·6 | 58·7 | 610·7 | 57·8 | B |
| | 19 | 0 | 15·04 | 520·7 | 58·1 | 616·5 | 57·2 | H |
| | 20 | 0 | 13·07 | 518·2 | 57·8 | 631·3 | 56·7 | H |
| | 21 | 0 | 18·13 | 510·6 | 57·3 | 632·6 | 56·7 | W |
| | 22 | 0 | 18·57 | 511·4 | 57·0 | 619·9 | 56·7 | H |
| | 23 | 0 | 16·59 | 510·1 | 57·1 | 616·7 | 57·2 | H |
| 3 | 0 | 0 | 19·46 | 506·0 | 57·3 | 618·8 | 58·0 | H |
| | 1 | 0 | 24·26 | 512·6 | 57·9 | 612·7 | 58·5 | H |
| | 2 | 0† | 25·06 | 535·6 | 58·5 | 619·8 | 59·2 | H |
| | 3 | 0† | 21·73 | 530·4 | 59·0 | 628·0 | 59·7 | H |
| | 4 | 0 | 19·79 | 537·1 | 59·3 | 641·8 | 60·0 | H |
| | 5 | 0 | 18·77 | 537·4 | 59·7 | 648·5 | 60·2 | H |
| | 6 | 0† | 16·18 | 541·8 | 59·8 | 659·1 | 60·0 | B |
| | 7 | 0 | 12·25 | 543·2 | 59·8 | 682·5 | 60·0 | W |
| | 8 | 0 | 15·72 | 533·9 | 59·7 | 680·4 | 60·0 | H |
| | 9 | 0 | 14·11 | 537·6 | 59·6 | 663·7 | 59·7 | B |
| | 10 | 0 | 12·15 | 541·8 | 59·3 | 644·2 | 59·5 | B |
| | 11 | 0 | 12·82 | 527·9 | 59·0 | 618·7 | 59·3 | W |
| | 12 | 0 | 13·63 | 522·2 | 58·9 | 620·6 | 59·0 | W |
| 4 | 13 | 0 | 25 13·03 | 528·5 | 60·4 | 620·8 | 60·4 | H |
| | 14 | 0 | 11·96 | 529·2 | 60·1 | 618·2 | 60·2 | H |
| | 15 | 0† | 15·27 | 524·5 | 59·9 | 604·4 | 59·9 | H |
| | 16 | 0 | 14·10 | 529·0 | 59·7 | 614·2 | 59·7 | H |
| | 17 | 0 | 12·85 | 534·8 | 59·4 | 615·9 | 59·3 | H |
| | 18 | 0† | 18·48 | 525·5 | 59·0 | 618·6 | 59·0 | H |
| | 19 | 0† | 20·72 | 527·8 | 58·8 | 609·4 | 58·5 | W |
| | 20 | 0 | 14·28 | 526·5 | 58·6 | 612·6 | 58·3 | W |
| | 21 | 6 | 12·85 | 514·4 | 58·3 | 628·5 | 58·2 | B |
| | 22 | 0 | 15·27 | 518·1 | 58·3 | 630·9 | 58·3 | W |
| | 23 | 0 | 16·23 | 518·1 | 58·4 | 635·3 | 58·4 | W |
| 5 | 0 | 0 | 18·97 | 520·2 | 58·7 | 640·5 | 59·0 | W |
| | 1 | 0 | 21·00 | 521·9 | 59·1 | 636·1 | 59·7 | W |
| | 2 | 0 | 19·40 | 541·0 | 59·8 | 628·6 | 60·5 | W |
| | 3 | 0 | 18·90 | 538·1 | 60·6 | 646·4 | 61·4 | W |
| | 4 | 0 | 16·53 | 532·5 | 61·3 | 654·0 | 62·4 | W |

DECLINATION. Torsion removed, Aug. 4d 22h, + 1°. Effect of + 10° of Torsion = − 0′·84.
BIFILAR. Observed 2m after the Declination, $k$=0·000140. BALANCE. Observed 3m after the Declination, $k$=0·0000085.

† Extra Observations made.
Aug. 4d 23h—5d 6h. Magnet with short scale used in the declinometer.

| Göttingen Mean Time of Declination Obs. | Declination. | Bifilar. | | Balance. | | Observer's Initial. |
|---|---|---|---|---|---|---|
| | | Corrected. | Thermometer. | Corrected. | Thermometer. | |
| d. h. m. | ° ′ | Sc. Div. | ° | Mic. Div. | ° | |
| 5 5 0 | 25 18·30 | 536·4 | 62·2 | 672·2 | 63·1 | W |
| 6 0 | 15·93 | 542·6 | 63·0 | 660·7 | 63·7 | H |
| 7 0 | 20·72 | 538·5 | 63·3 | 649·8 | 64·2 | H |
| 8 0 | 17·06 | 538·8 | 63·7 | 647·1 | 64·3 | W |
| 9 0 | 16·15 | 535·6 | 63·8 | 653·1 | 64·3 | H |
| 10 0 | 16·19 | 533·0 | 63·7 | 650·4 | 64·1 | H |
| 11 0 | 16·60 | 534·4 | 63·5 | 643·9 | 63·8 | B |
| 12 0 | 16·35 | 534·6 | 63·2 | 635·2 | 63·3 | B |
| 13 0 | 25 13·52 | 528·4 | 62·9 | 623·9 | 63·0 | B |
| 14 0 | 15·91 | 529·1 | 62·5 | 623·3 | 62·5 | B |
| 15 0 | 15·58 | 530·3 | 62·1 | 632·4 | 62·0 | B |
| 16 0 | 15·41 | 529·9 | 61·8 | 639·2 | 61·5 | B |
| 17 0 | 14·40 | 529·3 | 61·4 | 642·8 | 61·1 | B |
| 18 0 | 14·57 | 527·9 | 61·1 | 648·5 | 60·8 | B |
| 19 0 | 13·99 | 526·1 | 60·8 | 648·0 | 60·5 | H |
| 20 0 | 12·53 | 524·0 | 60·6 | 652·6 | 60·2 | H |
| 21 0 | 12·04 | 517·8 | 60·2 | 648·7 | 59·8 | W |
| 22 0 | 15·76 | 514·4 | 59·9 | 637·6 | 59·5 | H |
| 23 0 | 16·80 | 518·4 | 59·8 | 632·4 | 59·5 | H |
| 6. 0 0 | 18·47 | 522·2 | 59·6 | 631·9 | 59·5 | H |
| 1 0 | 20·50 | 529·1 | 59·5 | 635·2 | 59·7 | H |
| 2 0 | 21·16 | 531·2 | 59·8 | 638·7 | 60·0 | H |
| 3 0 | 21·14 | 532·3 | 60·0 | 644·2 | 60·5 | H |
| 4 0 | 18·63 | 539·1 | 60·3 | 653·1 | 60·7 | H |
| 5 0 | 18·16 | 535·6 | 60·3 | 664·1 | 60·7 | H |
| 6 0 | 17·31 | 539·7 | 60·6 | 664·3 | 60·6 | B |
| 7 0 | 16·82 | 531·4 | 60·4 | 661·7 | 60·3 | B |
| 8 0 | 16·92 | 533·0 | 60·2 | 655·5 | 60·0 | B |
| 9 0 | 16·60 | 533·0 | 59·9 | 650·9 | 59·8 | B |
| 10 0 | 17·26 | 534·2 | 59·8 | 647·7 | 59·5 | B |
| 11 0 | 17·29 | 533·3 | 59·6 | 646·0 | 59·4 | W |
| 12 0 | 16·86 | 532·4 | 59·3 | 644·4 | 59·0 | W |
| 13 0 | 25 17·63 | 530·8 | 59·0 | 643·8 | 58·7 | W |
| 14 0 | 17·70 | 531·5 | 58·8 | 643·0 | 58·4 | W |
| 15 0 | 19·31 | 531·1 | 58·5 | 643·2 | 58·3 | W |
| 16 0 | 17·49 | 529·7 | 58·3 | 646·5 | 58·1 | W |
| 17 0 | 17·53 | 531·6 | 58·0 | 648·3 | 58·0 | W |
| 18 0 | 16·06 | 530·8 | 57·9 | 655·4 | 57·7 | W |
| 19 0 | 13·97 | 530·3 | 57·8 | 652·7 | 57·5 | B |
| 20 0 | 12·78 | 527·4 | 57·7 | 655·1 | 57·4 | B |
| 21 0 | 14·08 | 521·2 | 57·5 | 655·3 | 57·3 | H |
| 22 0 | 14·15 | 519·6 | 57·4 | 652·6 | 57·3 | H |
| 23 0 | 16·82 | 519·4 | 57·4 | 646·9 | 57·6 | H |
| 7 0 0 | 19·58 | 520·6 | 57·8 | 645·8 | 58·0 | B |
| 1 0 | 22·06 | 524·3 | 57·9 | 638·6 | 58·4 | H |
| 2 0 | 22·87 | 528·3 | 58·3 | 632·3 | 58·7 | B |
| 3 0 | 22·13 | 532·4 | 58·7 | 642·2 | 59·0 | B |
| 4 0 | 20·25 | 530·5 | 58·9 | 649·6 | 59·5 | W |
| 5 0 | 18·30 | 529·4 | 59·3 | 649·9 | 59·8 | B |
| 6 0 | 16·65 | 532·6 | 59·6 | 652·1 | 60·0 | W |
| 7 0 | 15·67 | 534·4 | 59·7 | 653·1 | 60·0 | W |
| 8 0 | 16·08 | 534·7 | 59·7 | 650·6 | 59·8 | W |
| 9 0 | 16·65 | 534·3 | 59·4 | 649·1 | 59·6 | W |
| 10 0 | 17·07 | 534·3 | 59·1 | 646·4 | 59·3 | W |
| 11 0 | 17·42 | 532·9 | 58·9 | 644·5 | 59·0 | H |
| 12 0 | 17·63 | 532·2 | 58·7 | 644·3 | 58·6 | H |

| Göttingen Mean Time of Declination Obs. | Declination. | Bifilar. | | Balance. | | Observer's Initial. |
|---|---|---|---|---|---|---|
| | | Corrected. | Thermometer. | Corrected. | Thermometer. | |
| d. h. m. | ° ′ | Sc. Div. | ° | Mic. Div. | ° | |
| 7 13 0 | 25 18·00 | 531·6 | 58·4 | 643·7 | 58·4 | H |
| 14 0 | 17·80 | 533·0 | 58·1 | 644·2 | 58·2 | H |
| 15 0 | 17·24 | 531·9 | 57·9 | 645·3 | 58·0 | H |
| 16 0 | 17·37 | 533·1 | 57·7 | 644·7 | 57·6 | H |
| 17 0 | 16·06 | 531·5 | 57·3 | 649·0 | 57·2 | H |
| 18 0 | 14·89 | 531·0 | 57·2 | 652·2 | 57·0 | H |
| 19 0 | 14·40 | 531·7 | 57·0 | 653·6 | 56·9 | W |
| 20 0 | 14·43 | 529·7 | 56·9 | 653·0 | 56·7 | W |
| 21 0 | 15·34 | 525·5 | 56·9 | 654·9 | 56·9 | B |
| 22 0 | 17·24 | 524·7 | 56·9 | 650·1 | 57·0 | W |
| 23 0 | 19·51 | 522·9 | 57·0 | 647·8 | 57·4 | W |
| 8 0 0 | 22·78 | 524·8 | 57·4 | 643·6 | 57·9 | W |
| 1 0 | 25·36 | 525·5 | 57·8 | 639·5 | 58·4 | W |
| 2 0 | 25·63 | 531·1 | 58·3 | 645·7 | 59·0 | W |
| 3 0 | 24·15 | 536·4 | 58·7 | 644·7 | 59·5 | W |
| 4 0 | 19·75 | 538·3 | 59·0 | 657·9 | 59·8 | W |
| 5 0 | 19·58 | 535·2 | 59·3 | 671·9 | 60·0 | W |
| 6 0 | 18·27 | 536·1 | 59·4 | 671·5 | 60·1 | H |
| 7 0 | 17·49 | 539·0 | 59·5 | 663·5 | 60·2 | H |
| 8 0 | 16·89 | 540·2 | 59·7 | 657·2 | 60·2 | H |
| 9 0 | 17·15 | 538·0 | 59·7 | 656·7 | 60·1 | H |
| 10 0 | 17·22 | 536·8 | 59·5 | 652·1 | 59·9 | H |
| 11 0 | 15·89 | 538·5 | 59·3 | 642·9 | 59·5 | B |
| 12 0 | 13·52 | 542·6 | 59·1 | 637·5 | 59·2 | B |
| 13 0 | 25 16·90 | 532·6 | 58·9 | 637·2 | 59·0 | B |
| 14 0 | 16·90 | 535·3 | 58·7 | 636·5 | 58·6 | B |
| 15 0 | 16·80 | 534·8 | 58·4 | 640·0 | 58·3 | B |
| 16 0 | 15·92 | 533·8 | 58·1 | 641·4 | 58·0 | B |
| 17 0 | 15·59 | 533·1 | 57·9 | 646·9 | 57·7 | B |
| 18 0 | 16·26 | 532·7 | 57·7 | 646·8 | 57·4 | B |
| 19 0 | 14·06 | 534·7 | 57·3 | 646·7 | 57·0 | H |
| 20 0 | 15·01 | 533·9 | 57·0 | 650·6 | 57·0 | H |
| 21 0 | 15·52 | 534·9 | 57·0 | 647·4 | 56·9 | W |
| 22 0 | 16·32 | 531·4 | 56·9 | 648·3 | 57·0 | H |
| 23 0 | 18·13 | 525·4 | 57·0 | 644·9 | 57·2 | H |
| 9 0 0 | 22·03 | 524·5 | 57·2 | 641·9 | 57·7 | H |
| 1 0 | 22·89 | 523·6 | 57·7 | 645·8 | 58·3 | H |
| 2 0 | 27·48 | 521·3 | 58·1 | 659·7 | 59·0 | H |
| 3 0† | 26·82 | 540·9 | 58·7 | 667·1 | 59·5 | H |
| 4 0† | 28·25 | 572·4 | 59·1 | 711·2 | 60·0 | H |
| 5 0† | 22·89 | 537·8 | 59·5 | 769·3 | 60·2 | H |
| 6 0† | 22·50 | 573·4 | 59·8 | 725·4 | 60·3 | B |
| 7 0† | 21·93 | 559·6 | 59·8 | 752·5 | 60·3 | B |
| 8 0 | 18·55 | 549·2 | 59·9 | 727·2 | 60·2 | B |
| 9 0† | 11·98 | 558·1 | 59·7 | 669·0 | 60·0 | B |
| 10 0 | 14·96 | 529·2 | 59·4 | 659·0 | 59·7 | B |
| 11 0† | 18·65 | 539·6 | 59·1 | 623·0 | 59·5 | W |
| 12 0† | 20·29 | 510·6 | 58·9 | 538·4 | 59·1 | W |
| 13 0† | 25 12·76 | 526·3 | 58·7 | 580·5 | 58·9 | W |
| 14 0 | 12·76 | 520·4 | 58·3 | 602·3 | 58·4 | W |
| 15 0 | 10·43 | 522·0 | 58·0 | 594·1 | 57·9 | W |
| 16 0 | 14·67 | 520·2 | 57·7 | 586·8 | 57·3 | W |
| 17 0 | 15·14 | 525·2 | 57·1 | 613·3 | 56·7 | W |
| 18 0 | 15·59 | 522·3 | 56·7 | 629·6 | 56·1 | W |
| 19 0† | 13·44 | 515·6 | 56·2 | 635·0 | 55·6 | B |
| 20 0 | 15·67 | 512·7 | 55·8 | 638·9 | 55·2 | B |

DECLINATION. Magnet untouched, Aug. 5d—Oct. 6d.

BIFILAR. Observed 2m after the Declination, $k$=0·000140. BALANCE. Observed 3m after the Declination, $k$=0·0000085.

† Extra Observations made.

Aug. 5d 6h + Deflecting bar vibrated in the declinometer box.

| Göttingen Mean Time of Declination Obs. | Declination. | Bifilar. | | Balance. | | Observer's Initial. |
|---|---|---|---|---|---|---|
| | | Corrected. | Thermometer. | Corrected. | Thermometer. | |
| d. h. m. | ° ′ | Sc. Div. | ° | Mic. Div. | ° | |
| 9 21 2 | 25 16·19 | 501·5 | 55·4 | 643·2 | 55·0 | H |
| 22 0 | 19·41 | 511·4 | 55·2 | 635·6 | 55·2 | H |
| 23 0 | 18·81 | 520·8 | 55·2 | 640·2 | 55·5 | H |
| 10 0 0 | 20·63 | 525·7 | 55·6 | 638·3 | 56·0 | H |
| 1 0 | 23·32 | 529·0 | 56·0 | 639·2 | 56·6 | H |
| 2 0 | 24·10 | 529·2 | 56·7 | 639·8 | 57·5 | H |
| 3 0 | 20·55 | 538·6 | 57·5 | 645·5 | 58·4 | B |
| 4 0 | 18·81 | 539·0 | 58·2 | 651·5 | 59·1 | B |
| 5 0 | 18·47 | 539·6 | 58·9 | 651·7 | 59·7 | B |
| 6 0 | 17·73 | 538·1 | 59·3 | 648·5 | 60·1 | W |
| 7 0 | 17·29 | 543·0 | 60·0 | 648·8 | 60·8 | W |
| 8 0 | 17·96 | 540·7 | 60·6 | 649·9 | 61·2 | W |
| 9 0 | 16·59 | 544·8 | 60·9 | 635·3 | 61·4 | W |
| 10 0 | 17·46 | 536·4 | 60·9 | 634·4 | 61·2 | W |
| 11 0 | 16·25 | 532·4 | 60·8 | 636·4 | 61·0 | H |
| 12 0† | 19·58 | 537·0 | 60·5 | 595·6 | 60·7 | H |
| 11 13 0 | 25 13·67 | 531·6 | 60·1 | 589·7 | 60·2 | B |
| 14 0 | 12·76 | 524·8 | 59·9 | 595·6 | 60·0 | B |
| 15 0 | 13·59 | 527·5 | 59·7 | 595·6 | 59·7 | B |
| 16 0 | 14·70 | 525·6 | 59·5 | 612·9 | 59·5 | B |
| 17 0 | 16·16 | 527·9 | 59·2 | 618·4 | 59·2 | B |
| 18 0 | 14·10 | 526·4 | 59·0 | 629·3 | 59·0 | B |
| 19 0 | 13·30 | 524·4 | 58·8 | 638·2 | 58·7 | H |
| 20 0 | 13·61 | 521·2 | 58·7 | 642·0 | 58·6 | H |
| 21 0 | 14·44 | 522·3 | 58·7 | 640·4 | 58·6 | W |
| 22 0 | 17·19 | 525·6 | 58·7 | 634·0 | 59·0 | H |
| 23 0 | 19·82 | 524·9 | 58·8 | 634·9 | 59·5 | H |
| 12 0 0 | 22·10 | 528·7 | 59·1 | 630·4 | 60·1 | H |
| 1 0 | 23·61 | 530·6 | 59·9 | 628·4 | 60·7 | H |
| 2 0 | 23·11 | 531·4 | 60·5 | 629·3 | 61·5 | H |
| 3 0 | 21·30 | 535·4 | 61·4 | 636·2 | 62·5 | H |
| 4 0 | 20·13 | 535·6 | 62·1 | 639·4 | 63·2 | H |
| 5 0 | 19·32 | 533·3 | 62·8 | 636·3 | 63·7 | H |
| 6 0 | 18·10 | 532·8 | 63·6 | 637·7 | 64·1 | B |
| 7 0 | 17·49 | 533·4 | 63·9 | 630·0 | 64·3 | B |
| 8 0 | 17·39 | 539·8 | 64·0 | 629·6 | 64·4 | B |
| 9 0 | 15·98 | 536·9 | 64·0 | 639·7 | 64·2 | B |
| 10 0† | 12·04 | 544·3 | 63·9 | 632·7 | 63·8 | B |
| 11 0 | 15·74 | 533·0 | 63·5 | 635·7 | 63·3 | W |
| 12 0 | 15·91 | 534·2 | 63·0 | 632·9 | 62·9 | W |
| 13 0 | 25 16·57 | 531·9 | 62·6 | 634·4 | 62·3 | W |
| 14 0 | 15·45 | 528·5 | 62·0 | 635·6 | 61·7 | W |
| 15 0† | 19·91 | 532·3 | 61·6 | 601·5 | 61·0 | W |
| 16 0† | 10·68 | 525·7 | 61·1 | 611·9 | 60·7 | W |
| 17 0 | 14·64 | 527·2 | 60·8 | 617·7 | 60·3 | W |
| 18 0 | 11·96 | 526·1 | 60·3 | 625·3 | 59·8 | W |
| 19 0 | 13·52 | 523·2 | 59·9 | 626·0 | 59·2 | B |
| 20 0 | 14·50 | 528·6 | 59·6 | 622·0 | 58·8 | B |
| 21 0 | 15·92 | 523·4 | 59·1 | 625·9 | 58·5 | H |
| 22 0 | 19·05 | 523·9 | 58·9 | 630·8 | 58·5 | H |
| 23 0 | 20·53 | 524·2 | 58·9 | 627·7 | 58·7 | H |
| 13 0 0 | 21·16 | 528·3 | 59·0 | 609·8 | 59·0 | B |
| 1 0 | 24·96 | 531·9 | 59·2 | 612·9 | 59·5 | H |
| 2 0 | 23·54 | 535·5 | 59·8 | 627·1 | 60·3 | B |
| 3 0 | 22·33 | 536·5 | 60·3 | 626·9 | 61·0 | H |
| 4 0 | 20·09 | 538·4 | 61·0 | 628·6 | 62·0 | H |
| 13 5 0 | 25 18·67 | 531·6 | 61·5 | 635·6 | 62·1 | H |
| 6 0 | 17·31 | 537·6 | 61·8 | 636·8 | 62·3 | W |
| 7 0 | 17·74 | 533·0 | 61·9 | 632·3 | 62·4 | W |
| 8 0 | 17·54 | 536·7 | 62·0 | 627·2 | 62·4 | W |
| 9 0 | 17·17 | 537·4 | 61·9 | 628·5 | 62·2 | W |
| 10 0 | 16·86 | 536·6 | 61·8 | 627·6 | 62·0 | W |
| 11 0 | 17·27 | 535·0 | 61·7 | 627·0 | 61·7 | H |
| 12 0 | 16·65 | 534·3 | 61·3 | 627·3 | 61·5 | H |
| 13 0 | 25 16·60 | 533·7 | 61·1 | 626·5 | 61·2 | H |
| 14 0 | 16·36 | 533·3 | 61·0 | 626·5 | 61·0 | H |
| 15 0 | 16·08 | 532·5 | 60·8 | 630·2 | 60·7 | H |
| 16 0 | 15·78 | 531·8 | 60·5 | 632·4 | 60·5 | H |
| 17 0 | 14·60 | 529·8 | 60·1 | 635·3 | 60·0 | H |
| 18 0 | 13·93 | 528·5 | 59·9 | 633·1 | 59·5 | H |
| 19 0 | 13·46 | 527·7 | 59·6 | 635·0 | 59·0 | W |
| 20 0 | 14·26 | 525·7 | 59·2 | 637·0 | 58·8 | W |
| 21 0 | 14·73 | 523·7 | 59·0 | 635·8 | 58·6 | B |
| 22 0 | 16·82 | 523·5 | 58·8 | 638·7 | 58·7 | W |
| 23 0 | 20·06 | 524·5 | 58·9 | 639·9 | 58·9 | W |
| 14 0 0 | 21·70 | 528·7 | 59·0 | 639·0 | 59·5 | W |
| 1 0 | 23·56 | 532·9 | 59·6 | 638·2 | 60·2 | W |
| 2 0 | 23·09 | 537·0 | 60·1 | 643·4 | 60·8 | W |
| 3 0 | 22·33 | 537·1 | 60·8 | 641·4 | 61·5 | W |
| 4 0 | 20·09 | 539·7 | 61·7 | 637·4 | 62·5 | W |
| 5 0 | 19·17 | 536·3 | 62·4 | 639·0 | 63·2 | W |
| 6 0 | 17·76 | 537·9 | 62·9 | 635·1 | 63·7 | H |
| 7 0 | 17·68 | 538·1 | 63·2 | 636·3 | 64·0 | H |
| 8 0 | 16·52 | 537·0 | 63·4 | 638·7 | 64·0 | H |
| 9 0 | 14·96 | 540·6 | 63·3 | 642·1 | 63·6 | H |
| 10 0 | 16·82 | 539·4 | 63·1 | 636·4 | 63·2 | H |
| 11 0 | 16·89 | 536·7 | 62·8 | 633·7 | 62·7 | B |
| 12 0 | 16·28 | 534·7 | 62·3 | 633·3 | 62·3 | B |
| 13 0 | 25 16·25 | 534·3 | 62·0 | 634·3 | 61·8 | B |
| 14 0 | 15·86 | 534·4 | 61·7 | 635·8 | 61·4 | B |
| 15 0 | 15·86 | 534·0 | 61·3 | 636·1 | 61·0 | B |
| 16 0 | 16·15 | 535·4 | 60·9 | 636·5 | 60·7 | B |
| 17 0 | 14·73 | 533·9 | 60·7 | 640·8 | 60·3 | B |
| 18 0 | 13·07 | 530·6 | 60·3 | 649·1 | 60·0 | B |
| 19 0 | 12·13 | 529·1 | 60·0 | 646·7 | 59·7 | H |
| 20 0 | 12·40 | 524·5 | 59·8 | 648·9 | 59·5 | H |
| 21 0 | 14·04 | 520·9 | 59·5 | 648·6 | 59·1 | W |
| 22 0 | 17·87 | 518·7 | 59·2 | 638·7 | 59·0 | H |
| 23 0 | 19·93 | 518·7 | 59·0 | 625·4 | 59·0 | H |
| 15 0 0 | 21·32 | 522·0 | 58·9 | 617·3 | 58·8 | H |
| 1 0 | 21·77 | 528·7 | 58·9 | 617·3 | 58·7 | H |
| 2 0 | 21·24 | 531·9 | 58·8 | 626·4 | 58·7 | H |
| 3 0 | 20·89 | 535·5 | 58·8 | 630·9 | 58·7 | H |
| 4 0 | 19·84 | 534·2 | 58·7 | 631·8 | 58·7 | H |
| 5 0 | 18·16 | 533·7 | 58·7 | 637·3 | 58·7 | H |
| 6 0 | 17·06 | 542·4 | 58·8 | 638·5 | 58·9 | B |
| 7 0 | 16·25 | 542·0 | 58·9 | 637·4 | 59·1 | B |
| 8 0 | 16·60 | 543·8 | 59·0 | 634·5 | 59·3 | B |
| 9 0 | 16·86 | 542·0 | 59·1 | 634·6 | 59·5 | B |
| 10 0 | 16·86 | 540·6 | 59·1 | 632·3 | 59·5 | B |
| 11 0 | 15·54 | 539·9 | 59·1 | 631·8 | 59·5 | W |
| 12 0 | 13·16 | 534·8 | 59·0 | 627·3 | 59·3 | W |

DECLINATION. Magnet untouched, Aug. 5d—Oct. 6d.

BIFILAR. Observed 2m after the Declination, $k=0{\cdot}000140$. BALANCE. Observed 3m after the Declination, $k=0{\cdot}0000085$.

† Extra Observations made.

| Göttingen Mean Time of Declination Obs. | | | Declination. | Bifilar. | | Balance. | | Observer's Initial. |
|---|---|---|---|---|---|---|---|---|
| | | | | Corrected. | Thermometer. | Corrected. | Thermometer. | |
| d. | h. | m. | ° ′ | Sc. Div. | ° | Mic. Div. | ° | |
| 15 | 13 | 0 | 25 15·58 | 534·9 | 58·9 | 627·5 | 59·0 | W |
| | 14 | 0 | 15·29 | 534·5 | 58·8 | 629·0 | 58·8 | W |
| | 15 | 0 | 14·71 | 534·3 | 58·6 | 632·7 | 58·5 | W |
| | 16 | 0 | 14·64 | 533·4 | 58·3 | 636·2 | 58·2 | W |
| | 17 | 0 | 14·31 | 533·0 | 58·0 | 640·0 | 57·9 | W |
| | 18 | 0 | 13·67 | 531·0 | 57·8 | 643·5 | 57·5 | W |
| | 19 | 0 | 14·17 | 526·9 | 57·6 | 641·7 | 57·2 | B |
| | 20 | 0 | 14·38 | 526·3 | 57·4 | 641·8 | 57·0 | B |
| | 21 | 0 | 16·13 | 522·4 | 57·2 | 639·1 | 57·0 | H |
| | 22 | 0 | 17·74 | 517·3 | 57·2 | 633·4 | 57·4 | H |
| | 23 | 0 | 20·97 | 518·7 | 57·4 | 619·8 | 58·0 | H |
| 16 | 0 | 0 | 24·15 | 523·2 | 58·1 | 615·7 | 58·9 | B |
| | 1 | 0 | 25·51 | 529·1 | 58·8 | 618·0 | 60·0 | H |
| | 2 | 0 | 24·96 | 535·7 | 60·0 | 622·7 | 61·3 | B |
| | 3 | 0 | 23·66 | 534·5 | 61·0 | 632·7 | 62·5 | H |
| | 4 | 0 | 22·13 | 536·0 | 61·9 | 632·2 | 63·0 | H |
| | 5 | 0 | 20·03 | 537·9 | 62·4 | 640·2 | 63·5 | H |
| | 6 | 0 | 18·92 | 551·9 | 62·8 | 641·1 | 63·5 | W |
| | 7 | 0 | 17·83 | 545·9 | 62·8 | 647·2 | 63·3 | W |
| | 8 | 0 | 17·29 | 536·6 | 62·7 | 649·5 | 63·0 | W |
| | 9 | 0 | 16·46 | 545·3 | 62·3 | 649·2 | 62·7 | W |
| | 10 | 0† | 09·59 | 535·5 | 62·0 | 651·2 | 62·4 | W |
| | 11 | 0† | 05·79 | 532·1 | 61·7 | 635·1 | 61·9 | H |
| | 12 | 0 | 15·31 | 537·2 | 61·4 | 625·6 | 61·5 | H |
| | 13 | 0 | 25 14·65 | 539·0 | 61·0 | 618·5 | 61·2 | H |
| | 14 | 0 | 15·29 | 540·3 | 60·8 | 611·2 | 60·8 | H |
| | 15 | 0 | 10·70 | 532·5 | 60·4 | 622·5 | 60·3 | H |
| | 16 | 0 | 11·82 | 534·2 | 60·1 | 631·8 | 59·9 | H |
| | 17 | 0 | 14·43 | 534·7 | 59·8 | 635·0 | 59·7 | H |
| | 18 | 0 | 13·39 | 531·8 | 59·5 | 640·5 | 59·5 | H |
| | 19 | 0 | 12·40 | 527·3 | 59·2 | 644·5 | 58·9 | W |
| | 20 | 0 | 11·12 | 520·6 | 58·9 | 639·8 | 58·6 | W |
| | 21 | 0 | 12·65 | 513·3 | 58·8 | 640·3 | 58·4 | B |
| | 22 | 0 | 15·04 | 510·7 | 58·5 | 634·5 | 58·2 | W |
| | 23 | 0 | 18·84 | 514·7 | 58·3 | 620·5 | 58·0 | W |
| 17 | 0 | 0 | 22·78 | 519·6 | 58·0 | 608·7 | 57·9 | W |
| | 1 | 0 | 24·96 | 527·6 | 57·9 | 610·6 | 57·8 | W |
| | 2 | 0 | 25·11 | 539·1 | 57·8 | 615·2 | 57·5 | W |
| | 3 | 0 | 23·36 | 537·6 | 57·7 | 631·6 | 57·4 | W |
| | 4 | 0 | 21·54 | 538·6 | 57·5 | 643·8 | 57·2 | W |
| | 5 | 0 | 18·84 | 540·4 | 57·4 | 660·7 | 57·1 | W |
| | 6 | 0 | 18·21 | 541·0 | 57·2 | 663·9 | 57·2 | H |
| | 7 | 0 | 19·37 | 545·1 | 57·2 | 666·4 | 57·5 | H |
| | 8 | 0 | 18·01 | 544·2 | 57·4 | 666·6 | 57·7 | H |
| | 9 | 0 | 18·20 | 535·0 | 57·7 | 657·4 | 57·7 | H |
| | 10 | 0 | 15·71 | 538·9 | 57·7 | 639·3 | 57·7 | H |
| | 11 | 0 | 16·05 | 541·9 | 57·6 | 625·0 | 57·5 | B |
| | 12 | 0 | 17·42 | 535·7 | 57·4 | 617·9 | 57·3 | B |
| 18 | 13 | 0 | 14·26 | 531·7 | 58·4 | 626·6 | 58·0 | W |
| | 14 | 0 | 14·65 | 532·8 | 57·9 | 628·8 | 57·5 | W |
| | 15 | 0 | 14·82 | 533·8 | 57·6 | 631·6 | 57·0 | W |
| | 16 | 0 | 16·12 | 536·0 | 57·1 | 630·2 | 56·6 | W |
| | 17 | 0 | 14·65 | 530·9 | 56·7 | 641·1 | 56·2 | W |
| | 18 | 0 | 13·59 | 532·4 | 56·3 | 646·9 | 55·7 | W |
| | 19 | 0 | 12·89 | 533·2 | 56·0 | 652·4 | 55·3 | B |
| | 20 | 0 | 13·39 | 529·0 | 55·7 | 651·4 | 55·0 | B |

| Göttingen Mean Time of Declination Obs. | | | Declination. | Bifilar. | | Balance. | | Observer's Initial. |
|---|---|---|---|---|---|---|---|---|
| | | | | Corrected. | Thermometer. | Corrected. | Thermometer. | |
| d. | h. | m. | ° ′ | Sc. Div. | ° | Mic. Div. | ° | |
| 18 | 21 | 0 | 25 14·60 | 524·8 | 55·4 | 648·0 | 55·0 | H |
| | 22 | 0 | 16·10 | 521·0 | 55·4 | 649·9 | 55·3 | H |
| | 23 | 0 | 20·58 | 517·2 | 55·5 | 636·9 | 55·7 | H |
| 19 | 0 | 0 | 22·01 | 522·8 | 56·0 | 625·7 | 56·6 | B |
| | 1 | 0 | 23·58 | 526·4 | 56·7 | 626·3 | 57·3 | B |
| | 2 | 0 | 23·90 | 534·8 | 57·1 | 630·6 | 57·8 | B |
| | 3 | 0 | 24·17 | 536·4 | 57·5 | 639·9 | 58·1 | B |
| | 4 | 0 | 21·46 | 535·7 | 57·8 | 635·7 | 58·4 | B |
| | 5 | 0 | 19·14 | 538·3 | 58·0 | 640·7 | 58·7 | B |
| | 6 | 0 | 17·49 | 539·0 | 58·3 | 642·0 | 59·0 | W |
| | 7 | 0 | 16·50 | 540·1 | 58·7 | 641·4 | 59·1 | W |
| | 8 | 0 | 16·82 | 542·0 | 58·7 | 635·4 | 59·3 | W |
| | 9 | 0 | 15·65 | 541·6 | 58·8 | 634·1 | 59·4 | W |
| | 10 | 0 | 16·08 | 538·6 | 58·9 | 633·4 | 59·5 | W |
| | 11 | 0 | 16·92 | 538·8 | 59·0 | 630·0 | 59·5 | H |
| | 12 | 0 | 16·35 | 537·2 | 59·0 | 628·0 | 59·6 | H |
| | 13 | 0 | 25 17·29 | 536·2 | 59·0 | 626·2 | 59·7 | H |
| | 14 | 0 | 17·71 | 536·5 | 59·0 | 617·3 | 59·7 | H |
| | 15 | 0 | 15·54 | 535·6 | 59·1 | 617·2 | 59·7 | H |
| | 16 | 0 | 14·99 | 536·0 | 59·1 | 622·2 | 59·6 | H |
| | 17 | 0 | 14·58 | 535·6 | 59·1 | 628·1 | 59·5 | H |
| | 18 | 0 | 13·76 | 532·6 | 59·0 | 633·0 | 59·4 | H |
| | 19 | 0 | 13·66 | 530·5 | 58·9 | 633·0 | 59·1 | W |
| | 20 | 0 | 13·90 | 526·9 | 58·8 | 635·9 | 59·0 | W |
| | 21 | 0 | 15·38 | 521·4 | 58·8 | 635·6 | 58·9 | B |
| | 22 | 0 | 17·06 | 520·2 | 58·7 | 635·4 | 58·9 | W |
| | 23 | 0 | 19·44 | 522·9 | 58·7 | 633·6 | 59·2 | W |
| 20 | 0 | 0 | 21·86 | 528·1 | 58·9 | 621·4 | 59·5 | W |
| | 1 | 0 | 23·51 | 531·2 | 59·2 | 608·4 | 60·0 | W |
| | 2 | 0 | 23·54 | 534·4 | 59·8 | 607·4 | 60·7 | W |
| | 3 | 0 | 21·44 | 536·4 | 60·4 | 617·4 | 61·5 | W |
| | 4 | 5 | 19·04 | 538·5 | 61·0 | 624·9 | 62·0 | W |
| | 5 | 0 | 17·40 | 537·4 | 61·4 | 631·8 | 62·3 | W |
| | 6 | 0 | 17·49 | 548·7 | 61·8 | 633·6 | 62·5 | W |
| | 7 | 0 | 17·89 | 541·5 | 61·9 | 636·0 | 62·6 | W |
| | 8 | 0 | 18·07 | 542·8 | 61·9 | 631·6 | 62·5 | W |
| | 9 | 0 | 17·39 | 545·2 | 61·8 | 626·9 | 62·0 | W |
| | 10 | 0 | 17·71 | 543·8 | 61·4 | 625·9 | 61·5 | H |
| | 11 | 0 | 16·03 | 540·2 | 61·0 | 624·9 | 61·0 | B |
| | 12 | 0 | 15·59 | 539·0 | 60·7 | 623·4 | 60·5 | B |
| | 13 | 0 | 25 14·70 | 536·3 | 60·2 | 625·4 | 60·0 | B |
| | 14 | 0 | 13·94 | 542·3 | 59·8 | 616·2 | 59·5 | B |
| | 15 | 0 | 14·13 | 531·3 | 59·3 | 619·9 | 59·0 | B |
| | 16 | 0 | 12·22 | 533·6 | 58·9 | 619·5 | 58·5 | B |
| | 17 | 0 | 13·56 | 533·5 | 58·5 | 626·3 | 58·0 | B |
| | 18 | 0 | 14·01 | 531·4 | 58·1 | 629·9 | 57·5 | B |
| | 19 | 0 | 14·15 | 530·3 | 57·7 | 632·3 | 57·0 | W |
| | 20 | 0 | 13·84 | 527·7 | 57·3 | 637·3 | 56·7 | H |
| | 21 | 0 | 14·11 | 525·0 | 57·0 | 636·5 | 56·5 | H |
| | 22 | 0 | 15·59 | 522·5 | 56·8 | 634·6 | 56·5 | H |
| | 23 | 0 | 18·07 | 519·4 | 56·7 | 633·6 | 56·5 | H |
| 21 | 0 | 0 | 21·46 | 522·2 | 56·6 | 625·3 | 56·5 | H |
| | 1 | 0 | 22·80 | 525·0 | 56·6 | 615·0 | 56·7 | H |
| | 2 | 0 | 23·43 | 530·6 | 56·7 | 616·3 | 56·8 | H |
| | 3 | 0 | 23·48 | 535·5 | 56·9 | 623·5 | 57·1 | H |
| | 4 | 0 | 21·88 | 537·4 | 57·1 | 627·6 | 57·5 | H |

DECLINATION. Magnet untouched, Aug. 5d—Oct. 6d.

BIFILAR. Observed 2m after the Declination, $k$=0·000140. BALANCE. Observed 3m after the Declination, $k$=0·0000085.

† Extra Observations made.

| Göttingen Mean Time of Declination Obs. | Declination. | Bifilar. Corrected. | Bifilar. Thermometer. | Balance. Corrected. | Balance. Thermometer. | Observer's Initial. |
|---|---|---|---|---|---|---|
| d. h. m. | ° ′ | Sc. Div. | ° | Mic. Div. | ° | |
| 21 5 0 | 25 19·73 | 540·1 | 57·4 | 631·9 | 58·0 | H |
| 6 0 | 18·35 | 542·7 | 57·8 | 634·7 | 58·1 | B |
| 7 0 | 16·55 | 541·8 | 57·9 | 639·9 | 58·2 | B |
| 8 0 | 17·40 | 544·5 | 57·9 | 632·9 | 58·1 | B |
| 9 0 | 17·44 | 546·9 | 57·9 | 629·4 | 58·0 | B |
| 10 0 | 17·46 | 543·4 | 57·8 | 629·1 | 57·9 | B |
| 11 0 | 17·34 | 543·6 | 57·6 | 625·5 | 57·6 | B |
| 12 0 | 16·79 | 543·8 | 57·3 | 624·8 | 57·6 | D |
| 13 0 | 25 16·35 | 543·2 | 57·3 | 622·6 | 57·4 | D |
| 14 0 | 15·14 | 538·8 | 57·2 | 623·8 | 57·2 | D |
| 15 0 | 17·67 | 542·7 | 57·0 | 607·9 | 57·0 | D |
| 16 0 | 11·48 | 532·2 | 56·8 | 606·3 | 56·8 | D |
| 17 0 | 11·27 | 536·3 | 56·6 | 608·6 | 56·6 | D |
| 18 0 | 11·96 | 533·5 | 56·4 | 618·9 | 56·5 | D |
| 19 0 | 12·04 | 532·0 | 56·3 | 623·6 | 56·3 | B |
| 20 0 | 12·15 | 530·2 | 56·2 | 627·6 | 56·1 | B |
| 21 0 | 12·90 | 525·0 | 56·0 | 628·5 | 56·0 | H |
| 22 0 | 15·41 | 523·3 | 55·8 | 621·0 | 56·0 | H |
| 23 0 | 19·49 | 515·6 | 55·8 | 627·0 | 56·0 | H |
| 22 0 0 | 22·75 | 525·2 | 55·8 | 622·4 | 56·2 | H |
| 1 0 | 23·45 | 533·9 | 56·0 | 621·4 | 56·5 | H |
| 2 0 | 25·47 | 545·0 | 56·2 | 619·4 | 56·6 | B |
| 3 0 | 26·60 | 540·0 | 56·4 | 642·9 | 56·9 | B |
| 4 0† | 25·16 | 527·4 | 56·7 | 690·9 | 57·1 | B |
| 5 0† | 21·44 | 533·4 | 56·9 | 734·2 | 57·3 | B |
| 6 0† | 22·57 | 552·8 | 57·0 | 749·7 | 57·5 | B |
| 7 0† | 18·10 | 531·9 | 57·1 | 762·1 | 57·5 | B |
| 8 0 | 14·82 | 545·5 | 57·0 | 708·1 | 57·5 | H |
| 9 0 | 14·10 | 536·0 | 57·0 | 681·0 | 57·4 | B |
| 10 0† | 09·03 | 535·2 | 56·9 | 625·1 | 57·2 | B |
| 11 0† | 19·39 | 539·1 | 56·9 | 611·9 | 57·2 | H |
| 12 0† | 12·13 | 523·7 | 56·8 | 602·1 | 57·1 | H |
| 13 0† | 25 18·55 | 533·6 | 56·8 | 552·5 | 57·0 | H |
| 14 0† | 24·73 | 522·7 | 56·7 | 548·8 | 57·0 | H |
| 15 0† | 20·72 | 525·0 | 56·5 | 534·0 | 56·8 | H |
| 16 0 | 18·84 | 531·0 | 56·4 | 586·4 | 56·7 | H |
| 17 0 | 13·63 | 532·3 | 56·2 | 618·8 | 56·2 | H |
| 18 0 | 13·69 | 531·0 | 56·0 | 632·1 | 56·2 | H |
| 19 0 | 13·83 | 531·5 | 55·9 | 637·7 | 55·9 | B |
| 20 0† | 19·44 | 521·7 | 55·8 | 643·9 | 55·7 | B |
| 21 0† | 19·44 | 509·2 | 55·7 | 645·9 | 55·7 | B |
| 22 0† | 22·62 | 516·9 | 55·7 | 639·2 | 55·7 | B |
| 23 0 | 22·58 | 512·7 | 55·6 | 636·7 | 55·9 | B |
| 23 0 0 | 23·83 | 524·9 | 55·9 | 646·4 | 56·4 | B |
| 1 0† | 28·42 | 519·5 | 56·3 | 651·7 | 56·9 | B |
| 2 0† | 23·21 | 528·1 | 56·9 | 679·5 | 57·8 | B |
| 3 0† | 25·47 | 575·4 | 57·7 | 678·7 | 58·7 | B |
| 4 0† | 13·00 | 556·1 | 58·5 | 746·8 | 59·7 | H |
| 5 0† | 22·94 | 555·4 | 59·4 | 734·2 | 60·5 | B |
| 6 0† | 14·03 | 546·7 | 60·0 | 770·6 | 61·0 | H |
| 7 0 | 18·41 | 532·8 | 60·2 | 715·5 | 61·0 | H |
| 8 0 | 17·74 | 534·9 | 60·3 | 694·1 | 61·0 | H |
| 9 0 | 16·90 | 538·0 | 60·2 | 674·3 | 60·8 | H |
| 10 0 | 20·76 | 542·6 | 60·0 | 634·8 | 60·5 | H |
| 11 0 | 16·86 | 532·3 | 59·9 | 638·6 | 60·3 | B |
| 12 0 | 17·31 | 532·7 | 59·7 | 640·5 | 60·0 | B |

| Göttingen Mean Time of Declination Obs. | Declination. | Bifilar. Corrected. | Bifilar. Thermometer. | Balance. Corrected. | Balance. Thermometer. | Observer's Initial. |
|---|---|---|---|---|---|---|
| d. h. m. | ° ′ | Sc. Div. | ° | Mic. Div. | ° | |
| 23 13 0 | 25 18·82 | 538·9 | 59·3 | 620·2 | 59·5 | B |
| 14 0† | 24·08 | 532·2 | 58·9 | 602·8 | 59·0 | B |
| 15 0 | 16·89 | 522·6 | 58·7 | 584·6 | 58·8 | B |
| 16 0† | 12·11 | 528·6 | 58·5 | 559·7 | 58·5 | B |
| 17 0 | 13·10 | 516·4 | 58·1 | 601·2 | 58·1 | B |
| 18 0 | 15·58 | 524·6 | 57·9 | 596·7 | 57·6 | B |
| 19 45 | 18·25 | 519·0 | 57·2 | 613·1 | 57·0 | H |
| 20 0 | 16·16 | 521·3 | 57·1 | 615·1 | 57·0 | H |
| 21 0 | 21·01 | 514·8 | 57·0 | 624·3 | 56·7 | H |
| 22 0 | 21·79 | 519·5 | 56·9 | 620·1 | 56·8 | H |
| 23 0 | 20·02 | 521·1 | 56·9 | 635·8 | 57·2 | H |
| 24 0 0 | 22·06 | 528·1 | 57·2 | 637·9 | 58·0 | H |
| 1 0 | 22·15 | 532·8 | 57·8 | 628·2 | 59·0 | H |
| 2 0 | 22·47 | 536·6 | 58·8 | 634·5 | 60·0 | H |
| 3 0 | 20·79 | 532·0 | 59·8 | 646·3 | 61·0 | H |
| 4 0 | 18·90 | 525·1 | 60·7 | 652·8 | 62·0 | H |
| 5 0 | 18·16 | 529·0 | 61·4 | 640·3 | 62·4 | H |
| 6 0† | 16·65 | 542·2 | 62·0 | 641·2 | 62·9 | B |
| 7 0 | 13·49 | 541·4 | 62·2 | 670·2 | 63·1 | H |
| 8 0 | 12·20 | 535·4 | 62·4 | 684·5 | 62·9 | H |
| 9 0† | 14·89 | 535·8 | 62·2 | 662·9 | 62·5 | H |
| 10 0† | 09·64 | 515·9 | 61·9 | 619·3 | 62·3 | H |
| 11 0† | 12·89 | 529·1 | 61·6 | 605·7 | 62·0 | H |
| 12 0 | 20·67 | 529·3 | 61·2 | 610·0 | 61·5 | H |
| 25 13 0 | 25 12·29 | 534·9 | 58·6 | 606·0 | 58·4 | D |
| 14 0 | 14·92 | 532·5 | 58·3 | 611·5 | 58·3 | D |
| 15 0 | 14·23 | 530·3 | 58·0 | 611·3 | 58·0 | D |
| 16 0 | 13·43 | 529·5 | 57·7 | 622·3 | 57·6 | D |
| 17 0 | 13·46 | 526·4 | 57·4 | 621·3 | 57·3 | D |
| 18 0 | 15·69 | 527·2 | 57·2 | 611·2 | 57·0 | D |
| 19 0 | 16·13 | 535·7 | 57·0 | 598·9 | 56·7 | H |
| 20 0 | 15·49 | 528·7 | 56·8 | 617·2 | 56·5 | H |
| 21 0 | 17·36 | 521·3 | 56·6 | 628·7 | 56·4 | B |
| 22 0 | 19·58 | 517·4 | 56·4 | 634·8 | 56·5 | H |
| 23 0 | 21·32 | 518·5 | 56·4 | 635·8 | 56·5 | H |
| 26 0 0 | 23·78 | 525·6 | 56·5 | 633·7 | 56·8 | H |
| 1 0 | 24·75 | 528·9 | 56·9 | 641·6 | 57·4 | H |
| 2 0 | 23·38 | 538·5 | 57·4 | 645·1 | 58·2 | H |
| 3 0 | 22·22 | 532·0 | 58·1 | 648·8 | 59·2 | H |
| 4 0 | 18·28 | 536·3 | 59·0 | 654·3 | 60·1 | H |
| 5 0 | 16·30 | 533·9 | 59·8 | 647·5 | 61·0 | H |
| 6 0 | 15·67 | 536·7 | 60·6 | 644·0 | 61·4 | B |
| 7 0 | 14·85 | 538·2 | 60·9 | 638·8 | 61·5 | H |
| 8 0 | 16·41 | 538·7 | 61·1 | 634·0 | 61·5 | H |
| 9 0 | 17·27 | 536·5 | 61·0 | 630·6 | 61·3 | H |
| 10 0 | 16·41 | 537·5 | 60·8 | 628·9 | 60·8 | H |
| 11 0 | 16·08 | 540·0 | 60·2 | 624·9 | 60·3 | H |
| 12 0 | 12·69 | 535·5 | 59·9 | 617·2 | 59·7 | B |
| 13 0 | 25 14·94 | 528·5 | 59·4 | 611·2 | 59·0 | B |
| 14 0† | 16·46 | 526·3 | 58·9 | 618·5 | 58·4 | B |
| 15 0 | 18·84 | 530·1 | 58·4 | 608·8 | 57·8 | B |
| 16 0 | 14·26 | 529·2 | 57·9 | 626·1 | 57·1 | B |
| 17 0 | 14·03 | 529·4 | 57·3 | 631·9 | 56·4 | B |
| 18 0 | 13·20 | 526·2 | 56·7 | 635·9 | 55·6 | B |
| 19 0 | 12·48 | 524·4 | 56·0 | 632·5 | 55·0 | H |
| 20 0 | 12·93 | 519·0 | 55·4 | 633·9 | 54·5 | H |

DECLINATION. Magnet untouched, Aug. 5d—Oct. 6d.

BIFILAR. Observed 2m after the Declination, $k=0{\cdot}000140$. BALANCE. Observed 3m after the Declination, $k=0{\cdot}0000085$.

† Extra Observations made.

| Göttingen Mean Time of Declination Obs. | | | Declination. | Bifilar. | | Balance. | | Observer's Initial. |
|---|---|---|---|---|---|---|---|---|
| | | | | Corrected. | Thermometer. | Corrected. | Thermometer. | |
| d. | h. | m. | ° ′ | Sc. Div. | ° | Mic. Div. | ° | |
| 26 | 21 | 0 | 25 16·45 | 515·6 | 55·0 | 635·2 | 54·1 | H |
| | 22 | 0 | 19·08 | 515·8 | 54·6 | 630·9 | 54·0 | H |
| | 23 | 0 | 21·61 | 518·4 | 54·3 | 630·4 | 54·2 | H |
| 27 | 0 | 0 | 24·22 | 521·6 | 54·4 | 632·4 | 54·7 | H |
| | 1 | 0 | 24·53 | 525·4 | 55·0 | 635·0 | 55·5 | H |
| | 2 | 0 | 22·58 | 531·2 | 55·8 | 634·0 | 56·5 | H |
| | 3 | 0 | 19·04 | 532·8 | 56·7 | 642·3 | 58·0 | H |
| | 4 | 0 | 17·24 | 533·5 | 57·7 | 645·1 | 59·0 | H |
| | 5 | 0 | 16·06 | 535·3 | 58·7 | 639·2 | 60·0 | H |
| | 6 | 0 | 16·41 | 535·5 | 59·8 | 631·3 | 60·6 | B |
| | 7 | 0 | 17·12 | 536·8 | 60·4 | 630·9 | 60·9 | B |
| | 8 | 0 | 17·02 | 536·9 | 60·7 | 629·8 | 60·9 | B |
| | 9 | 0 | 14·13 | 539·7 | 60·7 | 628·5 | 60·7 | B |
| | 10 | 0 | 15·47 | 540·6 | 60·5 | 624·7 | 60·5 | B |
| | 11 | 0 | 16·68 | 534·8 | 60·0 | 624·4 | 60·0 | H |
| | 12 | 0 | 16·77 | 535·1 | 59·8 | 625·6 | 59·5 | H |
| | 13 | 0 | 25 17·31 | 536·2 | 59·2 | 622·1 | 59·0 | H |
| | 14 | 0 | 17·40 | 534·6 | 58·8 | 622·7 | 58·5 | H |
| | 15 | 0 | 17·33 | 531·3 | 58·2 | 627·4 | 58·0 | H |
| | 16 | 0 | 19·89 | 528·5 | 57·9 | 627·7 | 57·5 | H |
| | 17 | 0 | 15·65 | 531·0 | 57·5 | 629·2 | 57·0 | H |
| | 18 | 0 | 15·02 | 533·7 | 57·0 | 633·6 | 56·4 | H |
| | 19 | 0 | 13·43 | 529·7 | 56·7 | 639·9 | 55·9 | B |
| | 20 | 0 | 13·99 | 522·2 | 56·2 | 643·9 | 55·5 | B |
| | 21 | 0 | 16·03 | 515·1 | 55·9 | 644·8 | 55·5 | B |
| | 22 | 0 | 18·95 | 512·5 | 55·8 | 633·0 | 55·5 | B |
| | 23 | 0 | 22·01 | 512·5 | 55·8 | 620·4 | 55·9 | B |
| 28 | 0 | 0 | 24·87 | 521·0 | 56·1 | 607·8 | 56·7 | B |
| | 1 | 0 | 25·90 | 527·5 | 56·9 | 601·9 | 57·8 | B |
| | 2 | 0 | 24·48 | 533·6 | 57·8 | 610·4 | 58·9 | B |
| | 3 | 0 | 21·56 | 534·3 | 58·9 | 625·3 | 60·3 | B |
| | 4 | 0 | 18·28 | 538·1 | 60·2 | 627·8 | 61·6 | B |
| | 5 | 0 | 15·76 | 534·8 | 61·6 | 630·1 | 62·9 | B |
| | 6 | 0 | 15·41 | 537·1 | 62·8 | 633·3 | 64·0 | H |
| | 7 | 0 | 16·45 | 539·5 | 63·7 | 627·9 | 64·6 | H |
| | 8 | 0 | 16·55 | 539·6 | 64·2 | 624·5 | 64·6 | H |
| | 9 | 0 | 16·82 | 539·5 | 64·2 | 624·9 | 64·5 | H |
| | 10 | 0 | 16·82 | 538·0 | 64·0 | 625·8 | 64·5 | H |
| | 11 | 0 | 16·70 | 538·0 | 63·8 | 622·4 | 63·7 | D |
| | 12 | 0 | 16·41 | 535·3 | 63·3 | 623·8 | 63·3 | D |
| | 13 | 0 | 25 16·60 | 535·0 | 62·7 | 624·0 | 62·6 | D |
| | 14 | 0 | 16·21 | 534·1 | 62·2 | 624·3 | 61·8 | D |
| | 15 | 0 | 16·43 | 534·3 | 61·7 | 628·9 | 61·1 | D |
| | 16 | 0 | 15·54 | 532·1 | 61·1 | 635·7 | 60·7 | D |
| | 17 | 0 | 14·98 | 531·0 | 60·3 | 632·9 | 59·6 | D |
| | 18 | 0 | 14·10 | 528·9 | 59·8 | 635·9 | 58·8 | D |
| | 19 | 0 | 13·69 | 526·6 | 59·0 | 636·6 | 58·2 | H |
| | 20 | 0 | 13·44 | 521·5 | 58·4 | 635·1 | 57·5 | H |
| | 21 | 0 | 16·01 | 517·0 | 58·0 | 636·4 | 57·0 | B |
| | 22 | 0 | 17·53 | 516·5 | 57·5 | 633·3 | 56·9 | H |
| | 23 | 0 | 20·97 | 517·7 | 57·3 | 618·0 | 57·1 | H |
| 29 | 0 | 0 | 24·15 | 524·8 | 57·4 | 604·7 | 58·0 | H |
| | 1 | 0 | 24·96 | 532·0 | 58·1 | 609·7 | 59·0 | H |
| | 2 | 0 | 24·84 | 536·9 | 59·1 | 620·6 | 60·5 | H |
| | 3 | 0 | 22·25 | 538·6 | 60·4 | 629·2 | 62·0 | H |
| | 4 | 0 | 18·84 | 539·0 | 62·0 | 629·9 | 63·5 | H |

| Göttingen Mean Time of Declination Obs. | | | Declination. | Bifilar. | | Balance. | | Observer's Initial. |
|---|---|---|---|---|---|---|---|---|
| | | | | Corrected. | Thermometer. | Corrected. | Thermometer. | |
| d. | h. | m. | ° ′ | Sc. Div. | ° | Mic. Div. | ° | |
| 29 | 5 | 0 | 25 16·57 | 535·0 | 63·2 | 629·3 | 64·5 | H |
| | 6 | 0 | 16·12 | 546·5 | 64·2 | 635·5 | 65·4 | B |
| | 7 | 0 | 16·75 | 549·5 | 65·0 | 645·5 | 66·0 | H |
| | 8 | 0 | 16·82 | 547·6 | 65·0 | 652·1 | 65·5 | H |
| | 9 | 0 | 17·93 | 538·6 | 65·0 | 680·9 | 65·5 | H |
| | 10 | 0† | 17·06 | 528·8 | 65·0 | 692·6 | 65·5 | H |
| | 11 | 0† | 08·38 | 538·5 | 64·8 | 597·4 | 65·2 | H |
| | 12 | 0† | 13·46 | 535·7 | 64·7 | 522·2 | 65·0 | B |
| | 13 | 0† | 25 08·05 | 528·8 | 64·2 | 528·8 | 64·5 | B |
| | 14 | 0† | 13·67 | 520·5 | 63·8 | 539·9 | 64·0 | B |
| | 15 | 0† | 06·19 | 529·7 | 63·3 | 446·9 | 63·3 | B |
| | 16 | 0† | 18·13 | 516·9 | 62·8 | 518·5 | 62·5 | B |
| | 17 | 0† | 12·16 | 532·3 | 62·2 | 564·1 | 61·9 | B |
| | 18 | 0 | 09·86 | 533·6 | 61·7 | 606·5 | 61·0 | B |
| | 19 | 0 | 11·59 | 532·2 | 60·9 | 602·9 | 60·2 | H |
| | 20 | 0† | 12·29 | 510·2 | 60·3 | 621·2 | 59·5 | H |
| | 21 | 0 | 17·93 | 508·5 | 59·8 | 624·7 | 59·0 | H |
| | 22 | 0 | 16·90 | 510·1 | 59·3 | 629·8 | 58·7 | H |
| | 23 | 0 | 21·04 | 510·2 | 59·2 | 617·2 | 58·0 | H |
| 30 | 0 | 0 | 25·36 | 516·8 | 59·3 | 627·7 | 59·6 | H |
| | 1 | 0 | 28·94 | 512·3 | 59·8 | 635·8 | 60·5 | H |
| | 2 | 0 | 28·02 | 526·5 | 60·8 | 652·7 | 62·0 | H |
| | 3 | 0† | 25·73 | 531·9 | 62·0 | 664·3 | 63·3 | H |
| | 4 | 0† | 21·51 | 554·1 | 63·2 | 662·2 | 64·6 | H |
| | 5 | 0† | 18·87 | 533·8 | 64·5 | 688·8 | 66·0 | H |
| | 6 | 0 | 16·30 | 546·9 | 65·7 | 702·6 | 66·9 | B |
| | 7 | 0† | 13·49 | 539·5 | 66·4 | 721·0 | 67·1 | B |
| | 8 | 0 | 15·39 | 542·5 | 66·8 | 676·8 | 67·2 | H |
| | 9 | 0 | 17·04 | 535·6 | 66·9 | 669·0 | 67·5 | B |
| | 10 | 0 | 17·24 | 537·1 | 67·0 | 649·4 | 67·4 | B |
| | 11 | 0 | 14·06 | 534·5 | 66·9 | 638·3 | 67·4 | B |
| | 12 | 0 | 10·30 | 527·8 | 66·7 | 616·9 | 67·2 | B |
| | 13 | 0 | 25 21·12 | 524·9 | 66·4 | 572·8 | 67·0 | D |
| | 14 | 0 | 11·68 | 524·4 | 66·1 | 493·3 | 66·7 | D |
| | 15 | 0 | 10·45 | 527·5 | 65·8 | 570·1 | 66·3 | D |
| | 16 | 0 | 11·27 | 531·6 | 65·6 | 601·5 | 65·8 | D |
| | 17 | 0 | 12·62 | 530·5 | 65·2 | 603·2 | 65·4 | D |
| | 18 | 0 | 24·57 | 512·1 | 64·8 | 603·6 | 65·0 | H |
| | 19 | 0 | 15·76 | 525·2 | 64·4 | 593·3 | 64·5 | H |
| | 20 | 0 | 14·43 | 523·4 | 64·0 | 618·7 | 64·0 | H |
| | 21 | 0 | 14·53 | 518·1 | 63·7 | 630·2 | 63·5 | H |
| | 22 | 0 | 17·76 | 507·6 | 63·3 | 620·4 | 63·2 | H |
| | 23 | 0 | 20·25 | 512·1 | 63·3 | 629·6 | 63·5 | B |
| 31 | 0 | 0 | 23·65 | 517·9 | 63·7 | 635·0 | 64·3 | B |
| | 1 | 0 | 26·01 | 528·0 | 64·1 | 637·9 | 65·2 | D |
| | 2 | 0 | 26·14 | 527·5 | 64·9 | 653·9 | 66·0 | D |
| | 3 | 0 | 24·75 | 526·2 | 65·9 | 649·9 | 67·1 | C |
| | 4 | 0 | 19·73 | 544·4 | 66·8 | 658·1 | 68·1 | W |
| | 5 | 0 | 16·90 | 524·9 | 67·8 | 663·2 | 69·0 | C |
| | 6 | 0 | 17·37 | 535·8 | 68·7 | 660·0 | 69·7 | C |
| | 7 | 0 | 16·79 | 537·0 | 69·2 | 654·7 | 70·2 | C |
| | 8 | 0 | 10·75 | 534·2 | 69·7 | 665·6 | 70·5 | W |
| | 9 | 0 | 15·91 | 532·7 | 69·9 | 657·2 | 71·0 | W |
| | 10 | 0 | 15·61 | 531·9 | 69·9 | 637·4 | 70·5 | W |
| | 11 | 0 | 12·98 | 527·9 | 69·7 | 627·0 | 70·0 | B |
| | 12 | 0 | 13·59 | 527·0 | 69·1 | 613·4 | 69·2 | B |

DECLINATION. Magnet untouched, Aug. 5d—Oct. 6d.

BIFILAR. Observed 2m after the Declination, $k=0{\cdot}000140$. BALANCE. Observed 3m after the Declination, $k=0{\cdot}0000085$.

† Extra Observations made.

| Göttingen Mean Time of Declination Obs. | Declination. | Bifilar. Corrected. | Bifilar. Thermometer. | Balance. Corrected. | Balance. Thermometer. | Observer's Initial. |
|---|---|---|---|---|---|---|
| d. h. m. | ° ′ | Sc. Div. | ° | Mic. Div. | ° | |
| 1 13 0 | 25 15·81 | 525·6 | 67·9 | 608·5 | 67·4 | H |
| 14 0 | 16·65 | 528·5 | 67·3 | 624·8 | 66·7 | H |
| 15 0 | 16·87 | 538·2 | 66·8 | 627·5 | 66·0 | H |
| 16 0 | 17·49 | 537·8 | 66·0 | 636·2 | 65·2 | H |
| 17 0 | 15·58 | 526·7 | 65·3 | 638·2 | 64·3 | H |
| 18 0 | 18·07 | 530·3 | 64·7 | 637·6 | 63·5 | H |
| 19 0 | 14·10 | 527·9 | 63·9 | 632·8 | 62·5 | W |
| 20 0 | 15·12 | 523·0 | 63·3 | 633·9 | 62·0 | W |
| 21 3 | 14·98 | 513·7 | 62·8 | 647·0 | 61·4 | B |
| 22 0 | 17·40 | 513·8 | 62·3 | 654·2 | 61·4 | W |
| 23 0 | 19·44 | 514·4 | 62·3 | 649·6 | 62·0 | W |
| 2 0 0 | 23·78 | 517·4 | 62·5 | 636·2 | 62·8 | W |
| 1 0 | 25·24 | 508·7 | 63·2 | 640·6 | 64·0 | B |
| 2 0 | 25·67 | 522·2 | 64·3 | 643·3 | 65·5 | W |
| 3 0 | 24·05 | 525·8 | 65·7 | 646·8 | 67·0 | W |
| 4 0 | 20·60 | 533·1 | 67·0 | 645·7 | 68·3 | W |
| 5 0 | 19·44 | 538·3 | 68·5 | 652·6 | 69·5 | W |
| 6 0 | 16·82 | 534·3 | 69·4 | 650·8 | 70·4 | H |
| 7 0 | 16·36 | 536·9 | 70·1 | 646·5 | 71·0 | H |
| 8 0 | 16·89 | 537·5 | 70·3 | 642·9 | 70·7 | H |
| 9 0 | 14·70 | 535·9 | 70·2 | 637·1 | 70·5 | H |
| 10 0 | 16·03 | 535·1 | 70·0 | 632·9 | 70·3 | H |
| 11 0 | 16·82 | 534·3 | 69·8 | 629·0 | 69·8 | B |
| 12 0 | 16·45 | 534·5 | 69·2 | 630·6 | 69·1 | B |
| 13 0 | 25 14·78 | 533·0 | 68·7 | 622·1 | 68·3 | B |
| 14 0 | 17·44 | 534·5 | 68·0 | 604·5 | 67·5 | B |
| 15 0 | 12·63 | 525·5 | 67·4 | 618·6 | 66·7 | B |
| 16 0 | 16·66 | 520·3 | 66·7 | 630·7 | 65·9 | B |
| 17 0 | 15·22 | 527·8 | 66·0 | 631·0 | 65·0 | B |
| 18 0 | 13·25 | 528·5 | 65·3 | 638·8 | 64·1 | B |
| 19 0 | 13·12 | 527·6 | 64·5 | 634·3 | 63·4 | H |
| 20 0 | 14·23 | 523·9 | 63·9 | 638·7 | 62·7 | H |
| 21 0 | 15·42 | 519·3 | 63·4 | 640·9 | 62·3 | W |
| 22 0 | 18·30 | 514·1 | 63·0 | 640·9 | 62·1 | H |
| 23 0 | 22·78 | 511·6 | 62·8 | 636·1 | 62·0 | H |
| 3 0 0 | 23·18 | 519·8 | 62·7 | 626·6 | 62·5 | H |
| 1 0 | 24·72 | 521·5 | 62·8 | 623·8 | 63·0 | H |
| 2 0 | 23·93 | 531·0 | 63·2 | 627·0 | 63·6 | H |
| 3 0 | 20·89 | 535·0 | 63·8 | 638·4 | 64·5 | H |
| 4 0 | 18·23 | 535·3 | 64·5 | 647·7 | 65·2 | H |
| 5 0 | 16·82 | 536·3 | 65·1 | 646·0 | 65·7 | H |
| 6 0 | 16·28 | 536·5 | 65·7 | 635·9 | 66·0 | B |
| 7 0 | 16·01 | 536·5 | 65·9 | 628·7 | 65·9 | H |
| 8 0 | 16·86 | 538·2 | 66·0 | 629·9 | 65·7 | H |
| 9 0 | 16·39 | 537·9 | 65·8 | 628·6 | 65·5 | H |
| 10 0 | 16·52 | 537·7 | 65·3 | 628·1 | 65·0 | H |
| 11 0 | 16·53 | 538·2 | 65·0 | 627·9 | 64·5 | W |
| 12 0 | 15·67 | 534·4 | 64·7 | 630·8 | 64·0 | W |
| 13 0 | 25 15·41 | 535·1 | 64·1 | 629·3 | 63·5 | W |
| 14 0 | 15·51 | 533·8 | 63·8 | 632·6 | 63·0 | W |
| 15 0 | 15·41 | 533·9 | 63·4 | 634·1 | 62·6 | W |
| 16 0 | 15·64 | 533·7 | 63·0 | 636·9 | 62·3 | W |
| 17 0 | 15·51 | 529·1 | 62·7 | 640·4 | 62·0 | W |
| 18 0 | 17·36 | 533·8 | 62·4 | 630·1 | 61·6 | W |
| 19 0 | 13·56 | 528·9 | 62·1 | 634·3 | 61·4 | H |
| 20 0 | 12·93 | 527·4 | 61·9 | 638·6 | 61·2 | H |

| Göttingen Mean Time of Declination Obs. | Declination. | Bifilar. Corrected. | Bifilar. Thermometer. | Balance. Corrected. | Balance. Thermometer. | Observer's Initial. |
|---|---|---|---|---|---|---|
| d. h. m. | ° ′ | Sc. Div. | ° | Mic. Div. | ° | |
| 3 21 0 | 25 14·77 | 526·4 | 61·8 | 638·3 | 61·0 | B |
| 22 0 | 18·72 | 514·3 | 61·5 | 639·9 | 61·0 | H |
| 23 0 | 21·21 | 511·4 | 61·5 | 642·4 | 61·5 | H |
| 4 0 6 | 24·35 | 526·3 | 61·9 | 625·5 | 62·2 | H |
| 1 0 | 22·18 | 535·8 | 62·3 | 625·1 | 63·0 | H |
| 2 0 | 22·51 | 537·5 | 63·0 | 632·0 | 63·7 | H |
| 3 0 | 21·84 | 540·8 | 63·8 | 643·6 | 64·7 | H |
| 4 0 | 21·48 | 526·2 | 64·6 | 653·4 | 65·5 | H |
| 5 0 | 20·18 | 533·0 | 65·3 | 661·1 | 66·0 | H |
| 6 0 | 18·03 | 535·3 | 65·9 | 654·5 | 66·3 | W |
| 7 0 | 17·10 | 533·3 | 66·2 | 656·1 | 66·4 | W |
| 8 0 | 15·98 | 536·8 | 66·3 | 652·7 | 66·3 | W |
| 9 0 | 15·59 | 538·9 | 66·0 | 644·6 | 66·0 | W |
| 10 0† | 13·96 | 540·6 | 65·9 | 573·6 | 65·5 | W |
| 11 0† | 13·56 | 532·7 | 65·6 | 608·2 | 65·3 | B |
| 12 0 | 16·86 | 533·3 | 65·2 | 620·1 | 65·0 | B |
| 13 0 | 25 16·21 | 533·6 | 64·9 | 623·3 | 64·5 | B |
| 14 0 | 16·65 | 533·7 | 64·7 | 626·8 | 64·2 | B |
| 15 0 | 16·13 | 533·9 | 64·3 | 625·3 | 63·8 | B |
| 16 0 | 17·51 | 533·2 | 63·9 | 613·7 | 63·5 | B |
| 17 0 | 14·11 | 531·9 | 63·7 | 604·3 | 63·0 | B |
| 18 0 | 13·54 | 530·2 | 63·4 | 617·9 | 62·7 | B |
| 19 0 | 14·03 | 528·6 | 63·0 | 631·2 | 62·4 | W |
| 20 0 | 15·44 | 526·4 | 62·8 | 636·4 | 62·1 | W |
| 21 0 | 15·83 | 519·5 | 62·5 | 638·2 | 62·0 | H |
| 22 0 | 18·84 | 524·0 | 62·5 | 636·6 | 62·2 | W |
| 23 0 | 21·43 | 521·6 | 62·6 | 632·9 | 62·5 | W |
| 5 0 0 | 23·52 | 521·0 | 62·8 | 626·7 | 63·0 | W |
| 1 0 | 23·70 | 524·0 | 63·2 | 623·5 | 63·6 | H |
| 2 0 | 22·57 | 529·1 | 63·8 | 627·8 | 64·4 | W |
| 3 0 | 21·46 | 534·2 | 64·5 | 636·7 | 65·2 | W |
| 4 0 | 18·88 | 532·5 | 65·2 | 642·2 | 65·9 | W |
| 5 0 | 17·53 | 532·8 | 65·9 | 637·4 | 66·5 | W |
| 6 0 | 16·57 | 530·8 | 66·2 | 638·9 | 66·5 | W |
| 7 0 | 15·92 | 536·9 | 66·2 | 636·7 | 66·2 | B |
| 8 0 | 16·05 | 538·1 | 66·0 | 634·3 | 65·9 | B |
| 9 0 | 16·48 | 537·7 | 65·7 | 633·1 | 65·5 | B |
| 10 0 | 17·27 | 536·8 | 65·4 | 628·0 | 65·1 | B |
| 11 0 | 16·93 | 535·1 | 65·0 | 627·0 | 64·7 | H |
| 12 0 | 16·36 | 535·2 | 64·7 | 628·4 | 64·5 | H |
| 13 0 | 25 15·79 | 535·8 | 64·2 | 623·3 | 64·0 | H |
| 14 0 | 16·48 | 533·0 | 64·0 | 622·9 | 63·7 | H |
| 15 0 | 15·51 | 531·0 | 63·7 | 628·2 | 63·5 | H |
| 16 0 | 15·34 | 531·1 | 63·4 | 632·8 | 63·2 | H |
| 17 0 | 15·47 | 530·9 | 63·1 | 634·8 | 63·0 | H |
| 18 0 | 15·44 | 530·0 | 62·9 | 640·3 | 62·6 | H |
| 19 0 | 14·73 | 528·1 | 62·8 | 644·4 | 62·4 | B |
| 20 0 | 14·43 | 524·5 | 62·6 | 646·6 | 62·0 | B |
| 21 0 | 14·71 | 519·8 | 62·3 | 647·4 | 61·9 | W |
| 22 0 | 15·34 | 515·8 | 62·1 | 643·1 | 61·8 | B |
| 23 0 | 18·11 | 518·0 | 62·1 | 635·6 | 61·9 | B |
| 6 0 0 | 20·50 | 520·7 | 62·0 | 628·5 | 62·2 | W |
| 1 0 | 21·46 | 524·5 | 62·1 | 626·7 | 62·3 | W |
| 2 0 | 21·17 | 526·2 | 62·3 | 632·2 | 62·4 | B |
| 3 0 | 20·09 | 532·5 | 62·4 | 637·3 | 62·5 | B |
| 4 0 | 18·21 | 535·6 | 62·5 | 636·6 | 62·7 | W |

DECLINATION. Magnet untouched, Aug. 5d—Oct. 6d.

BIFILAR. Observed 2m after the Declination, $k=0·000140$. BALANCE. Observed 3m after the Declination, $k=0·0000085$.

† Extra Observations made.

| Göttingen Mean Time of Declination Obs. | | | Declination. | Bifilar. | | Balance. | | Observer's Initial. |
|---|---|---|---|---|---|---|---|---|
| | | | | Corrected. | Thermometer. | Corrected. | Thermometer. | |
| d. | h. | m. | ° ′ | Sc. Div. | ° | Mic. Div. | ° | |
| 6 | 5 | 0 | 25 16·66 | 536·8 | 62·7 | 637·7 | 62·8 | B |
| | 6 | 0 | 15·83 | 540·2 | 62·7 | 645·6 | 63·0 | H |
| | 7 | 3 | 16·12 | 536·7 | 62·8 | 652·1 | 63·0 | H |
| | 8 | 0 | 13·90 | 529·1 | 62·9 | 659·8 | 63·1 | H |
| | 9 | 0 | 16·01 | 534·1 | 62·9 | 656·1 | 63·2 | H |
| | 10 | 0 | 16·75 | 537·4 | 62·9 | 644·3 | 63·2 | H |
| | 11 | 0 | 16·89 | 537·9 | 62·9 | 640·4 | 63·0 | W |
| | 12 | 0 | 16·75 | 538·3 | 62·8 | 636·6 | 62·9 | W |
| | 13 | 0 | 25 16·82 | 538·5 | 62·7 | 633·7 | 62·7 | W |
| | 14 | 0 | 16·18 | 537·9 | 62·5 | 632·5 | 62·6 | W |
| | 15 | 0 | 16·15 | 537·2 | 62·3 | 633·8 | 62·5 | W |
| | 16 | 0 | 15·38 | 535·9 | 62·1 | 633·4 | 62·3 | W |
| | 17 | 0 | 15·38 | 536·3 | 62·0 | 638·3 | 62·0 | W |
| | 18 | 0 | 15·81 | 535·0 | 61·9 | 628·6 | 61·9 | W |
| | 19 | 0 | 13·32 | 537·8 | 61·8 | 633·0 | 61·6 | H |
| | 20 | 0 | 13·34 | 534·3 | 61·6 | 637·1 | 61·5 | H |
| | 21 | 0 | 14·43 | 531·6 | 61·5 | 631·2 | 61·4 | B |
| | 22 | 0 | 16·57 | 524·2 | 61·4 | 627·8 | 61·5 | H |
| | 23 | 0 | 19·46 | 519·1 | 61·5 | 626·8 | 62·0 | H |
| 7 | 0 | 0 | 22·87 | 523·5 | 62·0 | 610·6 | 62·6 | B |
| | 1 | 0 | 23·59 | 529·9 | 62·5 | 602·2 | 63·2 | H |
| | 2 | 0 | 22·25 | 534·8 | 63·1 | 614·5 | 64·0 | H |
| | 3 | 0 | 21·61 | 524·6 | 63·7 | 630·4 | 64·6 | H |
| | 4 | 0 | 19·34 | 539·0 | 64·2 | 626·4 | 65·1 | W |
| | 5 | 0 | 19·79 | 549·3 | 64·8 | 628·2 | 65·5 | H |
| | 6 | 0 | 18·84 | 536·1 | 65·0 | 636·7 | 65·8 | W |
| | 7 | 0 | 18·52 | 541·4 | 65·2 | 635·8 | 65·9 | W |
| | 8 | 0 | 18·55 | 542·0 | 65·4 | 634·1 | 65·9 | W |
| | 9 | 0 | 16·13 | 545·9 | 65·3 | 639·0 | 66·7 | W |
| | 10 | 0 | 16·55 | 542·3 | 65·3 | 636·0 | 66·3 | W |
| | 11 | 0 | 15·52 | 542·7 | 65·1 | 622·4 | 65·7 | B |
| | 12 | 0 | 12·38 | 533·5 | 64·9 | 585·4 | 65·2 | B |
| 8 | 13 | 0 | ..... | ..... | ..... | ..... | ..... | |
| | 14 | 0 | ..... | ..... | ..... | ..... | ..... | |
| | 15 | 0 | ..... | ..... | ..... | ..... | ..... | |
| | 16 | 6 | 25 13·81 | 534·0 | 57·5 | 631·4 | 57·0 | B |
| | 17 | 0 | 13·02 | 528·3 | 57·3 | 637·7 | 56·9 | B |
| | 18 | 0 | 13·59 | 528·5 | 57·1 | 641·5 | 56·7 | B |
| | 19 | 0 | 15·94 | 522·7 | 57·0 | 644·3 | 56·6 | H |
| | 20 | 0 | 17·49 | 525·7 | 56·8 | 640·8 | 56·5 | H |
| | 21 | 0 | 15·92 | 527·5 | 56·8 | 640·0 | 56·5 | W |
| | 22 | 0 | 16·16 | 525·8 | 56·7 | 644·5 | 56·6 | H |
| | 23 | 0 | 20·18 | 522·5 | 56·8 | 645·0 | 57·0 | H |
| 9 | 0 | 0 | 21·53 | 523·4 | 57·1 | 646·9 | 57·5 | H |
| | 1 | 0 | 23·21 | 528·0 | 57·6 | 644·1 | 58·4 | H |
| | 2 | 0 | 23·38 | 533·8 | 58·2 | 646·1 | 59·5 | H |
| | 3 | 0 | 21·23 | 533·5 | 59·1 | 647·7 | 60·2 | H |
| | 4 | 0 | 17·89 | 532·7 | 60·0 | 646·8 | 61·0 | H |
| | 5 | 0 | 16·60 | 535·4 | 60·8 | 647·7 | 62·0 | H |
| | 6 | 0 | 15·49 | 546·0 | 61·7 | 641·9 | 62·4 | B |
| | 7 | 0 | 08·52 | 538·1 | 62·1 | 662·2 | 62·7 | B |
| | 8 | 0 | 14·87 | 536·7 | 62·2 | 647·8 | 62·5 | B |
| | 9 | 0 | 16·08 | 527·4 | 62·1 | 639·4 | 62·3 | B |
| | 10 | 0 | 16·86 | 544·0 | 62·0 | 631·8 | 62·0 | B |
| | 11 | 0 | 14·13 | 536·4 | 61·7 | 631·0 | 61·6 | W |
| | 12 | 0† | 15·11 | 530·4 | 61·2 | 628·4 | 61·3 | W |

| Göttingen Mean Time of Declination Obs. | | | Declination. | Bifilar. | | Balance. | | Observer's Initial. |
|---|---|---|---|---|---|---|---|---|
| | | | | Corrected. | Thermometer. | Corrected. | Thermometer. | |
| d. | h. | m. | ° ′ | Sc. Div. | ° | Mic. Div. | ° | |
| 9 | 13 | 0† | 25 20·79 | 532·1 | 61·0 | 575·5 | 61·0 | W |
| | 14 | 0† | 15·67 | 535·9 | 60·8 | 581·7 | 60·9 | W |
| | 15 | 0 | 14·96 | 527·0 | 60·6 | 599·5 | 60·5 | W |
| | 16 | 0 | 14·91 | 529·4 | 60·2 | 612·5 | 60·2 | W |
| | 17 | 20 | 13·25 | 531·5 | 59·9 | 624·3 | 59·5 | W |
| | 18 | 0 | 12·63 | 530·3 | 59·7 | 628·4 | 59·2 | W |
| | 19 | 0 | 14·51 | 528·0 | 59·1 | 631·1 | 58·6 | B |
| | 20 | 0 | 14·62 | 523·9 | 58·8 | 634·6 | 58·1 | B |
| | 21 | 0 | 15·52 | 525·0 | 58·2 | 637·8 | 57·6 | H |
| | 22 | 0 | 16·70 | 523·7 | 58·0 | 637·4 | 57·6 | H |
| | 23 | 0 | 18·20 | 523·6 | 57·9 | 633·9 | 57·6 | H |
| 10 | 0 | 0 | 21·43 | 529·6 | 57·9 | 628·7 | 58·2 | H |
| | 1 | 0 | 22·17 | 531·3 | 58·0 | 624·6 | 58·5 | H |
| | 2 | 0 | 21·12 | 534·7 | 58·5 | 625·8 | 59·0 | B |
| | 3 | 0 | 19·29 | 535·3 | 58·9 | 630·3 | 59·4 | B |
| | 4 | 0 | 17·36 | 533·7 | 59·2 | 630·9 | 59·8 | B |
| | 5 | 0 | 15·51 | 533·1 | 59·6 | 629·9 | 60·2 | H |
| | 6 | 0 | 15·83 | 537·2 | 59·9 | 624·9 | 60·4 | W |
| | 7 | 0 | 16·68 | 539·8 | 60·0 | 623·1 | 60·4 | W |
| | 8 | 0 | 16·75 | 541·7 | 60·0 | 622·9 | 60·4 | W |
| | 9 | 0 | 17·33 | 538·4 | 59·9 | 627·3 | 60·1 | W |
| | 10 | 0 | 17·17 | 536·0 | 59·8 | 629·7 | 59·9 | W |
| | 11 | 0 | 16·80 | 536·3 | 59·3 | 628·7 | 59·5 | H |
| | 12 | 0 | 16·35 | 535·7 | 59·0 | 627·7 | 58·7 | H |
| | 13 | 0 | 25 15·99 | 537·1 | 58·6 | 629·5 | 58·2 | H |
| | 14 | 0 | 16·87 | 534·2 | 58·0 | 625·7 | 57·5 | H |
| | 15 | 0 | 14·35 | 532·4 | 57·5 | 626·4 | 57·0 | H |
| | 16 | 0 | 14·03 | 532·3 | 57·0 | 629·7 | 56·4 | H |
| | 17 | 0 | 14·28 | 530·9 | 56·4 | 632·1 | 55·7 | H |
| | 18 | 0 | 14·20 | 530·3 | 56·0 | 637·5 | 55·2 | H |
| | 19 | 0 | 13·44 | 529·3 | 55·4 | 644·1 | 54·5 | W |
| | 20 | 0 | 12·75 | 525·6 | 54·9 | 649·7 | 54·0 | W |
| | 21 | 0 | 13·67 | 522·3 | 54·6 | 650·9 | 53·9 | B |
| | 22 | 0 | 16·39 | 519·2 | 54·3 | 648·1 | 54·0 | W |
| | 23 | 0 | 19·51 | 521·3 | 54·3 | 642·6 | 54·4 | W |
| 11 | 0 | 0 | 21·77 | 527·8 | 54·7 | 627·2 | 55·4 | W |
| | 1 | 0 | 23·39 | 537·5 | 55·6 | 619·4 | 56·5 | W |
| | 2 | 0 | 22·40 | 538·2 | 56·4 | 626·3 | 57·5 | W |
| | 3 | 0 | 19·37 | 542·0 | 57·2 | 630·6 | 58·4 | W |
| | 4 | 3 | 16·75 | 539·0 | 58·0 | 636·0 | 59·0 | W |
| | 5 | 0 | 15·81 | 540·7 | 58·8 | 636·9 | 59·7 | W |
| | 6 | 0 | 15·52 | 540·3 | 59·2 | 628·9 | 60·0 | W |
| | 7 | 0 | 17·39 | 543·7 | 59·6 | 621·1 | 60·2 | W |
| | 8 | 0 | 18·16 | 542·7 | 59·7 | 622·5 | 60·3 | W |
| | 9 | 0 | 14·78 | 541·4 | 59·8 | 623·7 | 60·2 | H |
| | 10 | 0 | 17·42 | 536·9 | 59·6 | 625·2 | 60·0 | H |
| | 11 | 0 | 16·89 | 538·2 | 59·4 | 628·2 | 59·7 | B |
| | 12 | 0 | 16·62 | 538·2 | 59·1 | 627·5 | 59·4 | B |
| | 13 | 0 | 25 16·48 | 538·8 | 58·9 | 625·0 | 59·0 | B |
| | 14 | 0 | 16·18 | 538·2 | 58·7 | 626·2 | 58·7 | B |
| | 15 | 0 | 15·47 | 538·4 | 58·4 | 627·4 | 58·5 | B |
| | 16 | 0 | 14·98 | 536·2 | 58·0 | 627·9 | 58·1 | B |
| | 17 | 0 | 13·77 | 537·6 | 57·8 | 626·1 | 57·7 | B |
| | 18 | 0 | 13·43 | 535·5 | 57·5 | 628·4 | 57·2 | B |
| | 19 | 0 | 12·85 | 530·7 | 57·0 | 633·0 | 56·7 | H |
| | 20 | 0 | 13·02 | 524·6 | 56·7 | 638·3 | 56·3 | H |

DECLINATION. Magnet untouched, Aug. $5^d$—Oct. $6^d$.

BIFILAR. Observed $2^m$ after the Declination, $k=0{\cdot}000140$. BALANCE. Observed $3^m$ after the Declination, $k=0{\cdot}0000085$.

† Extra Observations made.

| Göttingen Mean Time of Declination Obs. | | | Declination. | | Bifilar. | | Balance. | | Observer's Initial. | Göttingen Mean Time of Declination Obs. | | | Declination. | | Bifilar. | | Balance. | | Observer's Initial. |
|---|---|---|---|---|---|---|---|---|---|---|---|---|---|---|---|---|---|---|---|
| | | | | | Corrected. | Thermometer. | Corrected. | Thermometer. | | | | | | | Corrected. | Thermometer. | Corrected. | Thermometer. | |
| d. | h. | m. | ° | ′ | Sc. Div. | ° | Mic. Div. | ° | | d. | h. | m. | ° | ′ | Sc. Div. | ° | Mic. Div. | ° | |
| 11 | 21 | 0 | 25 | 14·53 | 519·0 | 56·4 | 638·5 | 56·1 | W | 14 | 5 | 0 | 25 | 18·88 | 529·3 | 54·8 | 662·3 | 54·9 | W |
| | 22 | 0 | | 16·53 | 516·3 | 56·1 | 637·2 | 56·1 | H | | 6 | 0 | | 17·67 | 539·1 | 54·8 | 655·0 | 55·0 | H |
| | 23 | 0 | | 20·05 | 517·2 | 56·1 | 632·1 | 56·2 | H | | 7 | 0 | | 11·91 | 537·5 | 54·8 | 673·0 | 55·1 | H |
| 12 | 0 | 0 | | 22·15 | 524·7 | 56·2 | 627·1 | 56·7 | H | | 8 | 0 | | 08·68 | 545·8 | 54·9 | 663·0 | 55·2 | H |
| | 1 | 0 | | 23·75 | 532·8 | 56·6 | 621·8 | 57·5 | H | | 9 | 0 | | 17·33 | 542·8 | 55·0 | 641·8 | 55·5 | H |
| | 2 | 0 | | 23·07 | 537·3 | 57·2 | 624·9 | 58·2 | H | | 10 | 0 | | 17·02 | 537·2 | 55·0 | 637·4 | 55·6 | H |
| | 3 | 0 | | 20·49 | 536·4 | 57·9 | 628·7 | 59·0 | H | | 11 | 0 | | 16·80 | 536·7 | 55·2 | 634·2 | 55·7 | W |
| | 4 | 0 | | 18·50 | 539·5 | 58·7 | 627·2 | 59·7 | H | | 12 | 0 | | 16·62 | 535·8 | 55·3 | 634·4 | 55·8 | W |
| | 5 | 0 | | 17·07 | 536·0 | 59·4 | 634·6 | 60·5 | H | | | | | | | | | | |
| | 6 | 0 | | 16·38 | 532·4 | 60·1 | 635·1 | 60·9 | B | 15 | 13 | 0 | 25 | 16·12 | 532·7 | 57·8 | 620·0 | 58·1 | W |
| | 7 | 0 | | 17·49 | 536·5 | 60·7 | 631·5 | 61·0 | B | | 14 | 0 | | 15·61 | 535·0 | 57·7 | 620·3 | 58·1 | W |
| | 8 | 0 | | 16·92 | 538·1 | 60·8 | 632·7 | 61·0 | B | | 15 | 0 | | 16·32 | 535·4 | 57·7 | 620·8 | 58·1 | W |
| | 9 | 0 | | 12·25 | 538·5 | 60·6 | 635·0 | 60·6 | B | | 16 | 0 | | 16·01 | 534·1 | 57·7 | 615·8 | 58·0 | W |
| | 10 | 0 | | 13·88 | 539·2 | 60·2 | 614·1 | 60·2 | B | | 17 | 0 | | 18·40 | 532·4 | 57·7 | 608·3 | 58·0 | W |
| | 11 | 0 | | 13·41 | 536·6 | 59·9 | 612·4 | 59·7 | W | | 18 | 0 | | 19·39 | 532·0 | 57·6 | 613·4 | 58·0 | W |
| | 12 | 0 | | 15·59 | 538·9 | 59·4 | 612·4 | 59·0 | W | | 19 | 0 | | 19·35 | 529·1 | 57·5 | 616·6 | 58·0 | H |
| | | | | | | | | | | | 20 | 0 | | 16·93 | 530·7 | 57·3 | 611·7 | 57·6 | H |
| | 13 | 0 | 25 | 16·05 | 536·1 | 58·9 | 619·5 | 58·4 | W | | 21 | 0 | | 16·23 | 520·1 | 57·3 | 618·6 | 57·6 | H |
| | 14 | 0 | | 15·61 | 535·4 | 58·3 | 623·2 | 57·8 | W | | 22 | 0 | | 19·37 | 520·6 | 57·3 | 613·9 | 57·6 | H |
| | 15 | 0 | | 14·13 | 535·8 | 57·8 | 625·6 | 57·0 | W | | 23 | 0 | | 20·09 | 518·9 | 57·5 | 616·5 | 58·0 | H |
| | 16 | 0 | | 13·12 | 533·5 | 57·2 | 629·9 | 56·5 | W | 16 | 0 | 0 | | 22·11 | 520·6 | 57·8 | 616·6 | 58·5 | H |
| | 17 | 0 | | 13·64 | 534·3 | 56·7 | 629·0 | 55·8 | W | | 1 | 0 | | 24·15 | 526·2 | 58·3 | 613·5 | 59·3 | H |
| | 18 | 0 | | 13·46 | 535·5 | 56·0 | 629·3 | 55·3 | W | | 2 | 0 | | 24·99 | 534·0 | 59·2 | 611·0 | 60·2 | H |
| | 19 | 0 | | 12·69 | 533·0 | 55·6 | 631·1 | 54·7 | B | | 3 | 0 | | 23·66 | 534·2 | 60·0 | 620·9 | 61·0 | H |
| | 20 | 0 | | 12·25 | 527·3 | 55·0 | 636·8 | 54·2 | B | | 4 | 0 | | 21·53 | 535·8 | 60·9 | 627·3 | 62·0 | H |
| | 21 | 0 | | 13·57 | 521·1 | 54·7 | 640·0 | 54·0 | H | | 5 | 0 | | 18·63 | 536·5 | 61·7 | 628·7 | 62·7 | W |
| | 22 | 0 | | 16·52 | 516·8 | 54·4 | 638·5 | 54·0 | H | | 6 | 0 | | 15·27 | 532·4 | 62·2 | 638·7 | 63·1 | W |
| | 23 | 0 | | 19·68 | 518·9 | 54·3 | 625·9 | 54·0 | B | | 7 | 0 | | 17·02 | 537·9 | 62·6 | 631·6 | 63·1 | W |
| 13 | 0 | 0 | | 22·84 | 525·9 | 54·2 | 622·9 | 54·5 | H | | 8 | 0 | | 16·16 | 543·5 | 62·6 | 620·9 | 63·0 | W |
| | 1 | 0 | | 25·17 | 529·7 | 54·7 | 629·2 | 55·2 | H | | 9 | 0 | | 16·65 | 540·4 | 62·4 | 616·2 | 62·8 | W |
| | 2 | 0 | | 24·87 | 532·7 | 55·3 | 634·4 | 56·0 | B | | 10 | 0 | | 16·33 | 539·7 | 62·1 | 611·6 | 62·4 | W |
| | 3 | 0 | | 22·80 | 535·9 | 56·0 | 636·5 | 56·8 | B | | 11 | 0 | | 15·94 | 537·0 | 61·8 | 611·9 | 62·0 | H |
| | 4 | 0 | | 19·42 | 537·0 | 56·9 | 639·8 | 57·8 | B | | 12 | 0† | | 14·17 | 541·3 | 61·5 | 601·9 | 61·5 | H |
| | 5 | 0 | | 17·56 | 539·6 | 57·7 | 636·1 | 58·5 | B | | | | | | | | | | |
| | 6 | 0 | | 17·09 | 541·9 | 58·1 | 630·5 | 59·0 | W | | 13 | 0† | 25 | 14·75 | 540·1 | 61·0 | 572·0 | 61·0 | H |
| | 7 | 0 | | 17·67 | 542·5 | 58·5 | 621·2 | 59·0 | W | | 14 | 0† | | 06·97 | 528·2 | 60·7 | 548·9 | 60·7 | H |
| | 8 | 0 | | 17·54 | 544·2 | 58·6 | 622·5 | 58·9 | W | | 15 | 0 | | 08·08 | 526·6 | 60·2 | 576·4 | 60·3 | H |
| | 9 | 0 | | 13·54 | 542·0 | 58·4 | 633·3 | 58·7 | W | | 16 | 0 | | 12·08 | 533·1 | 60·0 | 591·4 | 59·8 | H |
| | 10 | 0 | | 16·15 | 539·9 | 58·3 | 628·1 | 58·5 | W | | 17 | 0 | | 12·15 | 535·4 | 59·6 | 601·3 | 59·2 | H |
| | 11 | 0 | | 14·01 | 539·0 | 58·0 | 623·2 | 58·3 | H | | 18 | 0 | | 13·52 | 533·7 | 59·0 | 609·8 | 58·7 | H |
| | 12 | 0 | | 15·98 | 543·6 | 57·9 | 618·4 | 58·0 | H | | 19 | 0 | | 12·25 | 536·5 | 58·8 | 616·0 | 58·3 | W |
| | | | | | | | | | | | 20 | 0 | | 12·72 | 527·4 | 58·3 | 620·5 | 57·9 | W |
| | 13 | 0 | 25 | 16·01 | 542·6 | 57·7 | 619·7 | 57·7 | H | | 21 | 3 | | 15·44 | 522·0 | 58·0 | 621·0 | 57·5 | B |
| | 14 | 0 | | 15·51 | 541·9 | 57·4 | 620·4 | 57·4 | H | | 22 | 0 | | 15·59 | 517·9 | 57·7 | 620·9 | 57·1 | W |
| | 15 | 0 | | 16·32 | 540·4 | 57·2 | 621·0 | 57·2 | H | | 23 | 0 | | 18·92 | 520·5 | 57·3 | 615·1 | 57·0 | W |
| | 16 | 0 | | 13·91 | 540·8 | 56·9 | 611·6 | 56·8 | H | 17 | 0 | 0 | | 22·91 | 511·6 | 57·1 | 619·3 | 56·8 | W |
| | 17 | 0 | | 11·61 | 540·4 | 56·7 | 609·6 | 56·5 | H | | 1 | 0 | | 23·27 | 522·4 | 57·0 | 614·7 | 56·5 | W |
| | 18 | 0 | | 10·80 | 540·1 | 56·5 | 612·8 | 56·3 | H | | 2 | 0 | | 24·35 | 534·5 | 56·9 | 617·0 | 56·5 | W |
| | 19 | 0 | | 11·91 | 536·9 | 56·2 | 618·5 | 56·0 | W | | 3 | 0 | | 22·91 | 528·2 | 56·7 | 629·4 | 56·4 | W |
| | 20 | 0 | | 11·39 | 535·1 | 56·0 | 619·7 | 55·7 | W | | 4 | 7 | | 20·79 | 531·2 | 56·6 | 630·4 | 56·3 | W |
| | 21 | 0 | | 13·39 | 525·5 | 55·7 | 620·8 | 55·4 | W | | 5 | 0 | | 18·57 | 534·8 | 56·5 | 634·1 | 56·2 | W |
| | 22 | 0 | | 18·13 | 520·1 | 55·4 | 621·1 | 55·2 | W | | 6 | 0 | | 16·93 | 534·5 | 56·2 | 630·7 | 56·0 | H |
| | 23 | 0 | | 22·17 | 515·9 | 55·1 | 623·3 | 55·0 | W | | 7 | 0 | | 16·53 | 537·0 | 56·0 | 630·2 | 56·0 | H |
| 14 | 0 | 0 | | 24·87 | 517·5 | 55·0 | 633·2 | 54·9 | W | | 8 | 0 | | 16·39 | 537·0 | 56·0 | 627·6 | 55·7 | H |
| | 1 | 0 | | 26·21 | 525·7 | 54·9 | 630·5 | 54·7 | W | | 9 | 0 | | 16·45 | 538·1 | 55·8 | 626·8 | 55·6 | H |
| | 2 | 0 | | 24·82 | 529·4 | 54·9 | 631·8 | 54·7 | W | | 10 | 0 | | 16·73 | 537·8 | 55·8 | 623·6 | 55·6 | H |
| | 3 | 0 | | 24·82 | 531·8 | 54·8 | 644·9 | 54·8 | W | | 11 | 0 | | 16·12 | 535·6 | 55·7 | 625·7 | 55·5 | B |
| | 4 | 0 | | 21·63 | 536·0 | 54·8 | 648·2 | 54·8 | W | | 12 | 0 | | 15·94 | 536·2 | 55·5 | 624·1 | 55·3 | B |

DECLINATION. Magnet untouched, Aug. $5^{d}$—Oct. $6^{d}$.

BIFILAR. Observed $2^{m}$ after the Declination $k = 0{\cdot}000140$. BALANCE. Observed $3^{m}$ after the Declination, $k = 0{\cdot}0000085$.

† Extra Observations made.

| Göttingen Mean Time of Declination Obs. | Declination. | Bifilar. | | Balance. | | Observer's Initial. |
|---|---|---|---|---|---|---|
| | | Corrected. | Thermometer. | Corrected. | Thermometer. | |
| d. h. m. | ° ′ | Sc. Div. | ° | Mic. Div. | ° | |
| 17 13 0 | 25 15·42 | 535·1 | 55·2 | 622·9 | 55·0 | B |
| 14 0 | 14·26 | 530·9 | 55·0 | 622·3 | 54·8 | B |
| 15 0† | 16·46 | 532·9 | 54·9 | 604·1 | 54·5 | B |
| 16 0† | 08·73 | 534·3 | 54·6 | 589·5 | 54·2 | B |
| 17 0 | 11·79 | 532·0 | 54·2 | 604·1 | 54·0 | B |
| 18 0 | 13·02 | 532·9 | 53·9 | 610·1 | 53·5 | B |
| 19 0 | 13·46 | 530·3 | 53·5 | 625·5 | 53·0 | H |
| 20 0 | 12·87 | 530·9 | 53·0 | 631·1 | 52·5 | H |
| 21 0 | 15·74 | 520·5 | 52·9 | 640·5 | 52·3 | W |
| 22 0 | 17·46 | 519·6 | 52·7 | 637·6 | 52·2 | H |
| 23 0 | 20·99 | 518·5 | 52·5 | 632·8 | 52·3 | H |
| 18 0 0 | 23·45 | 521·4 | 52·5 | 629·8 | 52·5 | H |
| 1 0 | 23·68 | 526·4 | 52·6 | 621·2 | 52·7 | H |
| 2 0 | 22·84 | 530·1 | 52·7 | 626·0 | 53·0 | H |
| 3 0 | 20·20 | 532·7 | 53·0 | 632·2 | 53·3 | H |
| 4 0 | 18·13 | 532·3 | 53·1 | 641·2 | 53·5 | H |
| 5 0 | 16·53 | 535·0 | 53·2 | 643·3 | 53·5 | H |
| 6 0 | 16·08 | 535·8 | 53·3 | 645·2 | 53·5 | B |
| 7 0 | 16·25 | 536·7 | 53·3 | 641·6 | 53·4 | B |
| 8 0 | 16·45 | 538·1 | 53·1 | 631·3 | 53·1 | B |
| 9 0 | 16·32 | 535·4 | 53·0 | 638·0 | 53·0 | B |
| 10 0 | 12·55 | 545·8 | 52·9 | 632·0 | 52·9 | B |
| 11 0 | 16·72 | 537·4 | 52·8 | 623·9 | 52·7 | D |
| 12 0 | 16·06 | 535·2 | 52·7 | 623·7 | 52·9 | D |
| 13 0 | 25 16·12 | 536·4 | 52·7 | 617·8 | 53·1 | D |
| 14 0 | 16·97 | 538·4 | 52·7 | 617·1 | 53·3 | D |
| 15 0 | 15·45 | 533·8 | 52·7 | 616·5 | 53·3 | W |
| 16 0 | 14·30 | 531·6 | 52·7 | 621·3 | 53·2 | W |
| 17 0 | 13·52 | 535·7 | 52·6 | 622·7 | 53·0 | W |
| 18 0 | 15·61 | 534·8 | 52·6 | 627·9 | 53·0 | W |
| 19 0 | 14·67 | 535·2 | 52·4 | 629·4 | 52·9 | B |
| 20 0 | 14·67 | 530·9 | 52·3 | 634·5 | 52·6 | B |
| 21 0 | 13·90 | 527·1 | 52·2 | 634·6 | 52·5 | B |
| 22 0 | 15·86 | 523·5 | 52·1 | 636·7 | 52·4 | B |
| 23 0 | 17·26 | 522·6 | 52·0 | 639·8 | 52·5 | H |
| 19 0 0 | 22·24 | 516·3 | 52·2 | 636·1 | 53·0 | H |
| 1 0 | 24·75 | 517·5 | 52·5 | 631·6 | 53·5 | H |
| 2 0 | 24·05 | 518·6 | 53·0 | 037·5 | 54·1 | H |
| 3 0 | 21·54 | 530·6 | 53·6 | 644·5 | 54·7 | H |
| 4 0 | 21·29 | 535·0 | 54·3 | 643·8 | 55·3 | B |
| 5 0 | 18·92 | 537·1 | 55·0 | 640·0 | 55·9 | B |
| 6 0 | 17·40 | 540·2 | 55·6 | 638·4 | 56·1 | H |
| 7 0 | 16·82 | 541·1 | 55·7 | 634·8 | 56·2 | H |
| 8 0 | 16·48 | 542·6 | 55·8 | 632·4 | 56·2 | W |
| 9 0 | 05·03 | 543·8 | 55·8 | 644·1 | 56·3 | W |
| 10 0 | 15·14 | 536·4 | 55·7 | 625·1 | 56·2 | W |
| 11 0 | 16·03 | 540·9 | 55·4 | 614·7 | 55·7 | H |
| 12 0 | 16·01 | 538·7 | 55·0 | 614·0 | 55·3 | H |
| 13 0† | 25 12·89 | 535·8 | 54·8 | 608·1 | 54·8 | H |
| 14 0† | 11·42 | 539·6 | 54·3 | 586·3 | 54·6 | H |
| 15 0† | 10·38 | 513·5 | 54·0 | 567·2 | 54·4 | H |
| 16 0† | 10·16 | 538·1 | 53·9 | 506·7 | 54·2 | H |
| 17 0 | 08·26 | 535·3 | 53·7 | 555·8 | 54·0 | H |
| 18 0 | 18·21 | 545·9 | 53·4 | 544·5 | 53·5 | H |
| 19 0 | 14·73 | 546·0 | 53·0 | 545·5 | 52·9 | W |
| 20 0 | 15·18 | 535·0 | 52·8 | 559·6 | 52·6 | W |

| Göttingen Mean Time of Declination Obs. | Declination. | Bifilar. | | Balance. | | Observer's Initial. |
|---|---|---|---|---|---|---|
| | | Corrected. | Thermometer. | Corrected. | Thermometer. | |
| d. h. m. | ° ′ | Sc. Div. | ° | Mic. Div. | ° | |
| 19 21 0 | 15 14·89 | 531·1 | 52·7 | 582·8 | 52·4 | B |
| 22 0 | 14·41 | 523·2 | 52·4 | 592·3 | 52·4 | W |
| 23 0† | 21·53 | 502·7 | 52·4 | 609·5 | 52·5 | W |
| 20 0 0† | 29·53 | 507·9 | 52·7 | 612·1 | 53·0 | W |
| 1 0 | 23·24 | 516·7 | 53·0 | 609·8 | 53·7 | W |
| 2 0 | 23·65 | 526·8 | 53·3 | 608·3 | 54·0 | W |
| 3 0 | 23·75 | 542·8 | 53·8 | 619·4 | 54·5 | W |
| 4 0 | 23·51 | 535·6 | 54·1 | 646·6 | 54·9 | W |
| 5 0† | 18·65 | 542·8 | 54·7 | 688·5 | 55·2 | W |
| 6 0† | 21·88 | 534·5 | 54·9 | 707·7 | 55·3 | W |
| 7 0† | 07·42 | 532·7 | 55·0 | 734·1 | 55·4 | W |
| 8 0† | 00·82 | 537·3 | 55·0 | 677·9 | 55·5 | H |
| 9 0† | 08·34 | 524·3 | 54·9 | 651·0 | 55·3 | H |
| 10 0† | 14·28 | 529·9 | 54·7 | 647·8 | 55·0 | H |
| 11 0† | 22·87 | 535·0 | 54·3 | 587·4 | 54·3 | B |
| 12 0† | 19·95 | 538·9 | 53·9 | 581·4 | 53·8 | B |
| 13 0 | 25 14·96 | 530·0 | 53·5 | 596·5 | 53·0 | B |
| 14 0 | 14·87 | 527·7 | 53·0 | 605·5 | 52·5 | B |
| 15 0 | 18·30 | 525·5 | 52·5 | 607·2 | 51·6 | B |
| 16 0 | 14·91 | 527·7 | 51·9 | 613·3 | 50·9 | B |
| 17 0 | 14·67 | 529·0 | 51·3 | 618·3 | 50·3 | B |
| 18 0 | 16·92 | 528·5 | 50·7 | 625·2 | 49·7 | B |
| 19 0 | 17·22 | 514·7 | 50·1 | 630·1 | 49·2 | H |
| 20 0 | 16·36 | 526·7 | 49·6 | 631·9 | 48·6 | H |
| 21 0 | 17·87 | 517·8 | 49·1 | 638·4 | 48·3 | W |
| 22 0 | 20·49 | 515·8 | 48·9 | 640·3 | 48·2 | H |
| 23 0 | 19·14 | 513·2 | 48·7 | 640·5 | 48·2 | H |
| 21 0 0 | 20·79 | 524·1 | 48·7 | 650·9 | 48·7 | H |
| 1 0 | 22·53 | 516·3 | 48·9 | 653·7 | 49·3 | H |
| 2 0 | 21·71 | 535·5 | 49·4 | 658·6 | 50·0 | H |
| 3 0 | 21·07 | 536·8 | 50·0 | 660·6 | 50·5 | H |
| 4 0 | 19·98 | 528·4 | 50·5 | 665·9 | 51·1 | H |
| 5 0 | 15·47 | 529·6 | 51·0 | 674·5 | 51·5 | H |
| 6 0 | 14·75 | 523·2 | 51·3 | 686·7 | 51·8 | B |
| 7 0 | 15·54 | 532·6 | 51·6 | 677·9 | 52·0 | B |
| 8 0 | 15·27 | 534·3 | 51·6 | 659·0 | 52·0 | B |
| 9 0 | 10·30 | 534·9 | 51·6 | 649·1 | 51·9 | B |
| 10 0 | 11·96 | 536·5 | 51·5 | 643·2 | 51·6 | B |
| 11 0 | 13·67 | 533·9 | 51·1 | 634·2 | 51·3 | W |
| 12 0 | 14·33 | 533·3 | 50·8 | 626·5 | 50·7 | W |
| 22 13 0 | 25 15·05 | 530·6 | 51·0 | 619·4 | 50·7 | H |
| 14 0 | 14·84 | 533·1 | 50·7 | 622·3 | 50·3 | H |
| 15 0 | 15·44 | 534·2 | 50·2 | 623·9 | 49·8 | H |
| 16 0 | 13·61 | 533·1 | 49·8 | 621·7 | 49·3 | H |
| 17 0 | 14·98 | 534·7 | 49·3 | 621·7 | 48·7 | H |
| 18 0 | 15·32 | 534·2 | 48·8 | 624·8 | 48·2 | H |
| 19 0 | 16·18 | 533·7 | 48·3 | 623·3 | 47·6 | W |
| 20 0† | 19·55 | 510·7 | 47·9 | 632·3 | 47·1 | W |
| 21 0 | 18·95 | 522·4 | 47·6 | 622·3 | 46·8 | B |
| 22 0 | 18·60 | 523·9 | 47·2 | 622·8 | 46·5 | W |
| 23 0 | 21·73 | 522·9 | 47·0 | 618·0 | 46·5 | W |
| 23 0 0 | 22·33 | 525·3 | 46·9 | 623·2 | 46·6 | W |
| 1 0 | 24·66 | 523·4 | 46·9 | 635·8 | 46·8 | W |
| 2 0 | 19·64 | 530·6 | 46·9 | 643·8 | 47·0 | W |
| 3 0 | 21·41 | 535·5 | 47·0 | 650·0 | 47·4 | W |
| 4 0 | 16·32 | 530·8 | 47·3 | 661·4 | 47·7 | W |

DECLINATION. Magnet untouched, Aug. $5^d$—Oct. $6^d$.

BIFILAR. Observed $2^m$ after the Declination, $k = 0{\cdot}000140$. BALANCE. Observed $3^m$ after the Declination $k = 0{\cdot}0000085$.

† Extra Observations made.

| Göttingen Mean Time of Declination Obs. | Declination. | Bifilar. | | Balance. | | Observer's Initial. |
|---|---|---|---|---|---|---|
| | | Corrected. | Thermometer. | Corrected. | Thermometer. | |
| d. h. m. | ° ′ | Sc. Div. | ° | Mic. Div. | ° | |
| 23 5 0 | 25 17·54 | 532·3 | 47·7 | 662·7 | 48·0 | W |
| 6 0 | 17·56 | 536·5 | 47·8 | 655·2 | 48·3 | H |
| 7 0† | 13·86 | 532·9 | 48·0 | 645·7 | 48·6 | H |
| 8 0 | 12·70 | 542·6 | 48·2 | 642·1 | 48·9 | W |
| 9 0 | 16·23 | 537·4 | 48·4 | 635·8 | 49·2 | H |
| 10 0 | 16·87 | 538·0 | 48·7 | 633·4 | 49·5 | H |
| 11 0 | 16·48 | 536·7 | 48·9 | 632·9 | 49·4 | B |
| 12 0 | 16·18 | 536·4 | 48·9 | 633·3 | 49·4 | B |
| 13 0 | 25 17·39 | 537·5 | 48·9 | 630·6 | 49·3 | B |
| 14 9 | 14·80 | 540·6 | 48·9 | 622·1 | 49·3 | B |
| 15 0 | 12·75 | 532·7 | 48·9 | 615·5 | 49·3 | B |
| 16 0 | 10·77 | 537·5 | 48·9 | 606·4 | 49·3 | B |
| 17 0 | 14·50 | 533·3 | 48·9 | 612·6 | 49·3 | B |
| 18 0 | 17·51 | 542·5 | 48·9 | 602·6 | 49·3 | B |
| 19 0 | 17·61 | 536·7 | 48·9 | 604·6 | 49·3 | H |
| 20 0 | 16·06 | 530·8 | 48·9 | 613·1 | 49·2 | H |
| 21 0 | 15·45 | 527·8 | 48·9 | 620·0 | 49·2 | W |
| 22 0 | 16·30 | 526·7 | 48·9 | 623·1 | 49·5 | H |
| 23 0 | 20·55 | 528·9 | 49·1 | 617·4 | 49·8 | H |
| 24 0 0 | 21·21 | 529·7 | 49·7 | 618·5 | 50·5 | H |
| 1 0 | 22·03 | 532·6 | 50·3 | 620·5 | 51·5 | H |
| 2 0 | 22·31 | 525·5 | 51·3 | 628·1 | 52·7 | H |
| 3 0 | 16·45 | 527·5 | 52·4 | 652·7 | 54·0 | H |
| 4 0 | 20·27 | 526·5 | 53·6 | 651·3 | 55·0 | W |
| 5 0 | 18·14 | 537·0 | 54·7 | 638·4 | 56·0 | W |
| 6 0 | 16·08 | 529·4 | 55·6 | 639·7 | 56·6 | B |
| 7 0 | 15·65 | 537·7 | 56·0 | 627·4 | 56·9 | B |
| 8 0† | 10·72 | 537·3 | 56·2 | 623·1 | 57·0 | B |
| 9 0 | 14·31 | 538·1 | 56·2 | 617·0 | 56·9 | B |
| 10 0 | 15·54 | 538·6 | 56·0 | 614·1 | 56·5 | B |
| 11 0 | 14·80 | 539·8 | 55·7 | 611·0 | 56·0 | W |
| 12 0 | 16·80 | 538·4 | 55·0 | 596·9 | 55·3 | W |
| 13 0 | 25 14·77 | 532·5 | 54·5 | 599·5 | 54·5 | W |
| 14 0 | 13·90 | 531·6 | 53·9 | 608·7 | 53·7 | W |
| 15 0† | 17·94 | 524·3 | 53·3 | 611·9 | 52·8 | W |
| 16 0 | 17·22 | 527·9 | 52·7 | 594·4 | 52·2 | W |
| 17 0 | 14·50 | 534·9 | 52·1 | 590·0 | 51·5 | W |
| 18 0 | 14·57 | 534·6 | 51·6 | 594·3 | 50·5 | W |
| 19 0 | 14·78 | 532·5 | 50·9 | 598·3 | 49·8 | B |
| 20 0 | 14·77 | 533·5 | 50·3 | 604·3 | 49·2 | B |
| 21 0 | 14·17 | 530·4 | 49·8 | 614·4 | 49·0 | H |
| 22 0 | 16·68 | 530·5 | 49·4 | 617·9 | 48·8 | H |
| 23 0 | 19·76 | 518·8 | 49·3 | 621·8 | 49·0 | B |
| 25 0 0 | 25·65 | 519·7 | 49·5 | 622·6 | 49·6 | B |
| 1 0 | 23·54 | 526·1 | 49·8 | 619·3 | 50·3 | H |
| 2 0 | 24·55 | 527·9 | 50·7 | 626·5 | 51·3 | B |
| 3 0 | 24·79 | 535·1 | 51·3 | 620·1 | 52·2 | B |
| 4 0 | 23·46 | 535·8 | 52·0 | 624·8 | 52·8 | B |
| 5 0 | 19·48 | 535·8 | 52·6 | 637·1 | 53·3 | W |
| 6 0 | 20·23 | 536·8 | 53·0 | 652·0 | 53·8 | W |
| 7 0 | 16·65 | 536·7 | 53·2 | 641·2 | 54·0 | W |
| 8 0† | 13·23 | 538·0 | 53·3 | 640·3 | 54·2 | W |
| 9 0† | 09·32 | 529·6 | 53·6 | 643·9 | 54·5 | W |
| 10 0 | 25 10·03 | 525·2 | 53·8 | 639·4 | 54·6 | W |
| 11 0† | 24 59·06 | 533·9 | 53·8 | 583·3 | 54·5 | H |
| 12 0† | 25 00·53 | 517·8 | 53·8 | 506·6 | 54·7 | H |

| Göttingen Mean Time of Declination Obs. | Declination. | Bifilar. | | Balance. | | Observer's Initial. |
|---|---|---|---|---|---|---|
| | | Corrected. | Thermometer. | Corrected. | Thermometer. | |
| d. h. m. | ° ′ | Sc. Div. | ° | Mic. Div. | ° | |
| 25 13 0† | 25 03·58 | 509·2 | 53·9 | 488·2 | 54·9 | H |
| 14 0† | 20·55 | 515·6 | 54·0 | 415·0 | 55·0 | H |
| 15 0† | 14·64 | 524·4 | 54·0 | 434·2 | 55·0 | H |
| 16 0 | 18·16 | 524·8 | 54·0 | 445·1 | 55·0 | H |
| 17 0† | 08·01 | 542·2 | 54·0 | 468·6 | 54·8 | H |
| 18 0† | 09·49 | 540·5 | 54·0 | 512·7 | 54·8 | H |
| 19 0† | 16·15 | 538·6 | 54·0 | 538·6 | 54·9 | W |
| 20 0† | 14·17 | 515·6 | 54·0 | 558·6 | 54·9 | W |
| 21 0† | 18·47 | 533·0 | 54·1 | 577·3 | 54·9 | B |
| 22 0† | 20·08 | 514·7 | 54·1 | 588·5 | 55·0 | W |
| 23 0 | 22·17 | 511·5 | 54·3 | 596·7 | 55·3 | W |
| 26 0 0† | 26·63 | 510·6 | 54·8 | 597·1 | 55·7 | W |
| 1 0† | 23·65 | 534·4 | 55·1 | 609·5 | 56·1 | W |
| 2 0 | 27·48 | 529·8 | 55·7 | 629·2 | 56·5 | W |
| 3 0 | 25·26 | 534·5 | 56·0 | 630·6 | 56·9 | W |
| 4 0† | 14·64 | 527·8 | 56·5 | 766·0 | 57·3 | W |
| 5 0† | 18·50 | 564·1 | 56·8 | 785·3 | 57·5 | W |
| 6 0† | 19·88 | 550·2 | 57·0 | 800·8 | 57·8 | H |
| 7 0† | 01·34 | 544·2 | 57·1 | 756·7 | 58·0 | H |
| 8 0† | 00·20 | 506·5 | 57·3 | 719·1 | 58·3 | H |
| 9 0† | 02·48 | 521·5 | 57·5 | 618·5 | 58·5 | H |
| 10 0 | 11·39 | 521·3 | 57·7 | 604·3 | 58·7 | H |
| 11 0† | 11·82 | 522·7 | 57·9 | 591·1 | 58·5 | B |
| 12 0† | 17·70 | 524·2 | 57·8 | 561·0 | 58·5 | B |
| 13 0† | 25 18·43 | 528·8 | 57·8 | 589·7 | 58·5 | B |
| 14 0 | 18·41 | 526·2 | 57·7 | 617·0 | 58·3 | B |
| 15 0 | 16·65 | 530·1 | 57·6 | 611·7 | 58·0 | B |
| 16 0 | 17·10 | 528·2 | 57·3 | 611·9 | 57·6 | B |
| 17 0 | 17·96 | 529·9 | 57·0 | 604·9 | 57·3 | B |
| 18 0 | 20·05 | 533·9 | 56·9 | 594·1 | 57·0 | B |
| 19 0† | 27·53 | 519·1 | 56·7 | 586·4 | 56·7 | H |
| 20 0 | 31·12 | 509·8 | 56·4 | 598·2 | 56·6 | H |
| 21 0 | 21·43 | 523·4 | 56·4 | 601·1 | 56·6 | W |
| 22 0 | 21·66 | 510·2 | 56·3 | 638·8 | 56·7 | H |
| 23 0† | 26·90 | 493·1 | 56·4 | 665·2 | 57·1 | H |
| 27 0 0 | 25·36 | 514·1 | 57·0 | 639·7 | 58·0 | H |
| 1 0 | 26·54 | 518·1 | 57·6 | 640·7 | 58·7 | H |
| 2 0 | 24·91 | 526·5 | 58·5 | 633·9 | 59·6 | H |
| 3 0 | 20·20 | 520·4 | 59·3 | 646·3 | 60·6 | H |
| 4 0† | 19·44 | 538·7 | 60·2 | 673·4 | 61·5 | H |
| 5 0 | 18·18 | 540·4 | 60·9 | 711·0 | 62·0 | H |
| 6 0† | 10·40 | 546·7 | 61·4 | 719·2 | 62·3 | B |
| 7 0† | 10·13 | 528·3 | 61·6 | 685·9 | 62·4 | B |
| 8 0 | 13·34 | 529·8 | 61·7 | 667·0 | 62·5 | B |
| 9 0 | 13·63 | 528·4 | 61·7 | 656·1 | 62·3 | B |
| 10 0 | 15·51 | 534·3 | 61·6 | 633·8 | 62·1 | B |
| 11 0 | 15·42 | 531·8 | 61·4 | 622·3 | 62·0 | W |
| 12 0† | 20·15 | 528·6 | 61·1 | 603·8 | 61·6 | W |
| 13 0† | 25 17·40 | 530·9 | 60·9 | 568·5 | 61·5 | W |
| 14 0† | 20·38 | 529·8 | 60·9 | 579·8 | 61·3 | W |
| 15 0 | 17·74 | 530·6 | 60·8 | 537·6 | 61·2 | W |
| 16 0† | 16·89 | 530·1 | 60·7 | 532·6 | 61·1 | W |
| 17 0† | 22·47 | 517·0 | 60·6 | 532·1 | 61·0 | W |
| 18 0 | 14·51 | 534·3 | 60·4 | 561·2 | 60·9 | W |
| 19 0 | 14·13 | 531·3 | 60·3 | 592·1 | 60·5 | B |
| 20 0 | 14·17 | 527·8 | 60·1 | 607·4 | 60·2 | B |

DECLINATION. Magnet untouched, Aug. 5d—Oct. 6d.

BIFILAR. Observed 2m after the Declination, $k=0{\cdot}000140$. BALANCE. Observed 3m after the Declination, $k=0{\cdot}0000085$.

† Extra Observations made.

| Göttingen Mean Time of Declination Obs. | | | Declination. | Bifilar. | | Balance. | | Observer's Initial. |
|---|---|---|---|---|---|---|---|---|
| | | | | Corrected. | Thermometer. | Corrected. | Thermometer. | |
| d. | h. | m. | ° ′ | Sc. Div. | ° | Mic. Div. | ° | |
| 27 | 21 | 0 | 25 14·48 | 523·4 | 59·9 | 621·5 | 60·0 | H |
| | 22 | 0 | 14·82 | 519·2 | 59·8 | 625·7 | 59·9 | H |
| | 23 | 0 | 18·52 | 518·1 | 59·7 | 624·1 | 59·9 | H |
| 28 | 0 | 0 | 21·77 | 524·1 | 59·8 | 618·3 | 59·9 | B |
| | 1 | 0 | 24·26 | 520·1 | 59·7 | 624·0 | 60·0 | H |
| | 2 | 0 | 24·53 | 530·4 | 59·7 | 628·1 | 60·0 | B |
| | 3 | 0 | 23·51 | 526·8 | 59·8 | 634·4 | 60·0 | W |
| | 4 | 0 | 20·49 | 532·6 | 59·7 | 634·6 | 59·9 | B |
| | 5 | 0 | 15·74 | 531·2 | 59·7 | 667·4 | 59·8 | B |
| | 6 | 0† | 06·95 | 532·7 | 59·6 | 688·7 | 59·6 | W |
| | 7 | 0 | 17·44 | 531·2 | 59·3 | 668·6 | 59·5 | W |
| | 8 | 0 | 17·81 | 533·9 | 59·0 | 645·3 | 59·0 | W |
| | 9 | 0 | 16·23 | 533·6 | 58·8 | 639·3 | 58·5 | W |
| | 10 | 0 | 15·72 | 532·7 | 58·4 | 636·8 | 58·0 | W |
| | 11 | 0 | 15·52 | 532·8 | 58·0 | 633·0 | 57·4 | H |
| | 12 | 0 | 14·99 | 533·1 | 57·5 | 629·9 | 57·0 | H |
| 29 | 13 | 0† | 25 11·35 | 511·6 | 52·8 | 407·1 | 52·4 | W |
| | 14 | 0† | 09·73 | 524·0 | 52·3 | 531·9 | 52·0 | W |
| | 15 | 0 | 20·70 | 523·3 | 51·9 | 554·5 | 51·5 | W |
| | 16 | 0 | 16·99 | 526·1 | 51·5 | 565·9 | 50·8 | W |
| | 17 | 0† | 19·93 | 529·4 | 50·9 | 557·2 | 50·0 | W |
| | 18 | 0† | 25·83 | 513·6 | 50·4 | 563·2 | 49·7 | W |
| | 19 | 0† | 23·86 | 528·1 | 49·9 | 565·3 | 49·2 | H |
| | 20 | 0† | 19·64 | 527·0 | 49·4 | 602·6 | 49·0 | H |
| | 21 | 0 | 18·43 | 522·2 | 49·2 | 614·5 | 48·6 | B |
| | 22 | 0 | 21·29 | 519·3 | 48·8 | 631·6 | 48·5 | H |
| | 23 | 0 | 20·30 | 517·8 | 48·8 | 632·5 | 48·6 | H |
| 30 | 0 | 0 | 21·56 | 522·2 | 48·8 | 637·0 | 49·0 | H |
| | 1 | 0 | 23·27 | 515·2 | 49·0 | 651·6 | 49·6 | H |
| | 2 | 0† | 20·82 | 533·7 | 49·8 | 692·5 | 50·5 | H |
| | 3 | 0† | 29·37 | 545·1 | 50·5 | 702·8 | 51·5 | H |
| | 4 | 0† | 20·40 | 548·6 | 51·3 | 734·3 | 52·5 | H |
| | 5 | 0† | 11·28 | 552·2 | 52·1 | 757·6 | 53·0 | H |
| | 6 | 0 | 18·97 | 534·6 | 52·7 | 742·1 | 53·5 | W |
| | 7 | 0 | 20·08 | 532·2 | 52·9 | 682·9 | 53·8 | W |
| | 8 | 0 | 18·00 | 527·4 | 53·0 | 671·4 | 54·0 | W |
| | 9 | 0† | 13·72 | 539·4 | 53·1 | 650·3 | 54·0 | W |
| | 10 | 0 | 18·07 | 529·2 | 53·3 | 634·2 | 54·2 | W |
| | 11 | 0 | 15·47 | 526·4 | 53·4 | 632·0 | 54·3 | H |
| | 12 | 0 | 14·68 | 534·4 | 53·5 | 619·5 | 54·5 | H |
| | 13 | 0† | 25 18·90 | 525·0 | 53·7 | 599·6 | 54·5 | H |
| | 14 | 0† | 10·33 | 518·8 | 53·7 | 396·4 | 54·5 | H |
| | 15 | 0† | 07·11 | 537·1 | 53·8 | 429·3 | 54·9 | H |
| | 16 | 0† | 15·85 | 541·2 | 53·9 | 398·5 | 55·2 | H |
| | 17 | 0† | 23·85 | 538·7 | 54·0 | 325·2 | 55·4 | H |
| | 18 | 0† | 43·82 | 508·5 | 54·2 | 291·8 | 55·4 | H |
| | 19 | 0† | 33·38 | 497·4 | 54·4 | 377·4 | 55·6 | W |
| | 20 | 0† | 31·72 | 495·7 | 54·6 | 486·3 | 55·5 | W |
| | 21 | 0† | 24·66 | 484·7 | 54·6 | 559·1 | 55·4 | B |
| | 22 | 0† | 25·44 | 497·0 | 54·6 | 615·1 | 55·4 | W |
| | 23 | 0† | 24·15 | 483·6 | 54·7 | 668·5 | 55·7 | W |
| 1 | 0 | 0† | 21·26 | 511·9 | 55·0 | 679·5 | 56·0 | B |
| | 1 | 0† | 29·90 | 544·0 | 55·3 | 893·5 | 56·3 | B |
| | 2 | 0† | 24·20 | 525·6 | 55·7 | 794·1 | 56·5 | W |
| | 3 | 0† | 24·22 | 538·8 | 55·9 | 748·0 | 56·7 | W |
| | 4 | 0† | 14·23 | 574·5 | 55·9 | 880·3 | 56·7 | W |
| 1 | 5 | 0† | 25 05·50 | 564·5 | 56·0 | 815·6 | 56·7 | W |
| | 6 | 0† | 15·72 | 545·9 | 55·9 | 899·6 | 56·5 | B |
| | 7 | 0† | 23·88 | 507·2 | 55·9 | 648·3 | 56·6 | W |
| | 8 | 0† | 09·12 | 506·3 | 55·9 | 760·8 | 56·8 | W |
| | 9 | 0† | 02·87 | 499·7 | 55·8 | 636·8 | 56·7 | H |
| | 10 | 0† | 25 15·11 | 496·3 | 55·8 | 460·7 | 56·7 | H |
| | 11 | 0† | 24 59·10 | 533·5 | 55·8 | 511·8 | 56·5 | B |
| | 12 | 0† | 25 15·45 | 528·5 | 55·7 | 589·3 | 56·5 | B |
| | 13 | 0 | 25 16·75 | 528·5 | 55·5 | 608·0 | 56·1 | B |
| | 14 | 0 | 17·29 | 530·0 | 55·2 | 608·8 | 55·8 | B |
| | 15 | 0 | 16·73 | 529·1 | 55·0 | 621·8 | 55·5 | B |
| | 16 | 0 | 16·23 | 531·8 | 54·8 | 624·9 | 55·1 | B |
| | 17 | 0 | 15·91 | 532·4 | 54·6 | 630·4 | 54·8 | B |
| | 18 | 0 | 14·84 | 536·1 | 54·3 | 630·7 | 54·6 | B |
| | 19 | 0 | 14·82 | 535·5 | 54·1 | 635·8 | 54·5 | H |
| | 20 | 0 | 13·90 | 532·9 | 54·0 | 641·1 | 54·3 | H |
| | 21 | 0 | 14·80 | 524·6 | 54·0 | 644·3 | 54·3 | W |
| | 22 | 0 | 15·83 | 524·7 | 53·9 | 646·5 | 54·5 | H |
| | 23 | 0 | 20·89 | 522·4 | 54·0 | 634·1 | 54·7 | H |
| 2 | 0 | 0 | 20·87 | 527·5 | 54·3 | 625·4 | 55·3 | H |
| | 1 | 0 | 21·48 | 522·7 | 54·8 | 623·6 | 55·7 | H |
| | 2 | 0 | 20·82 | 527·4 | 55·3 | 621·8 | 56·3 | H |
| | 3 | 0 | 20·55 | 526·1 | 56·0 | 627·7 | 57·0 | H |
| | 4 | 0 | 18·84 | 526·3 | 56·6 | 630·5 | 57·6 | H |
| | 5 | 0 | 17·02 | 534·3 | 57·1 | 638·1 | 58·0 | H |
| | 6 | 0† | 15·91 | 546·1 | 57·6 | 681·8 | 58·0 | B |
| | 7 | 0† | 01·83 | 526·7 | 57·7 | 773·3 | 58·0 | B |
| | 8 | 0† | 17·29 | 523·0 | 57·6 | 725·5 | 57·9 | B |
| | 9 | 0† | 17·12 | 529·3 | 57·4 | 677·4 | 57·6 | B |
| | 10 | 0 | 15·44 | 536·2 | 57·0 | 655·3 | 57·2 | B |
| | 11 | 0 | 15·78 | 534·5 | 56·8 | 640·3 | 56·8 | W |
| | 12 | 0† | 14·91 | 527·0 | 56·4 | 627·6 | 56·4 | W |
| | 13 | 0† | 25 13·83 | 531·6 | 56·0 | 574·8 | 56·2 | W |
| | 14 | 0† | 14·06 | 530·9 | 55·9 | 597·2 | 56·0 | W |
| | 15 | 0 | 16·28 | 531·3 | 55·8 | 614·1 | 56·0 | W |
| | 16 | 0† | 18·05 | 533·6 | 55·7 | 611·2 | 55·8 | W |
| | 17 | 0 | 14·77 | 533·7 | 55·5 | 621·8 | 55·7 | W |
| | 18 | 0 | 15·44 | 535·7 | 55·3 | 626·6 | 55·5 | W |
| | 19 | 0 | 14·94 | 536·8 | 55·3 | 629·1 | 55·5 | B |
| | 20 | 0 | 14·33 | 530·8 | 55·1 | 631·8 | 55·3 | B |
| | 21 | 0 | 13·30 | 526·9 | 55·1 | 633·5 | 55·3 | H |
| | 22 | 0 | 14·73 | 521·8 | 55·1 | 639·2 | 55·4 | H |
| | 23 | 0 | 17·07 | 518·3 | 55·1 | 641·1 | 55·6 | B |
| 3 | 0 | 0 | 20·27 | 516·1 | 55·5 | 637·4 | 56·0 | B |
| | 1 | 0 | 23·07 | 519·2 | 55·9 | 633·9 | 56·4 | B |
| | 2 | 0† | 27·22 | 527·6 | 56·3 | 644·9 | 56·9 | B |
| | 3 | 0† | 21·57 | 519·8 | 56·8 | 664·7 | 57·3 | B |
| | 4 | 0 | 21·27 | 533·2 | 57·1 | 660·8 | 57·8 | B |
| | 5 | 0 | 19·12 | 536·5 | 57·4 | 657·9 | 58·0 | B |
| | 6 | 0 | 17·73 | 532·1 | 57·7 | 649·7 | 58·0 | W |
| | 7 | 0 | 17·31 | 533·5 | 57·7 | 645·1 | 57·9 | W |
| | 8 | 0 | 16·48 | 535·0 | 57·4 | 640·9 | 57·5 | W |
| | 9 | 0 | 15·17 | 528·9 | 57·1 | 644·6 | 57·2 | W |
| | 10 | 0 | 15·59 | 531·0 | 56·9 | 642·6 | 56·8 | W |
| | 11 | 0 | 13·79 | 534·6 | 56·4 | 629·1 | 56·3 | H |
| | 12 | 0 | 12·90 | 531·9 | 56·1 | 621·6 | 55·9 | H |

DECLINATION. Magnet untouched, Aug. 5d—Oct. 6d.

BIFILAR. Observed 2m after the Declination, $k=0{\cdot}000140$. BALANCE. Observed 3m after the Declination, $k=0{\cdot}0000085$.

† Extra Observations made.

| Göttingen Mean Time of Declination Obs. | Declination. | Bifilar. Corrected. | Bifilar. Thermometer. | Balance. Corrected. | Balance. Thermometer. | Observer's Initial. |
|---|---|---|---|---|---|---|
| d. h. m. | ° ′ | Sc. Div. | ° | Mic. Div. | ° | |
| 3 13 0 | 25 13·39 | 533·0 | 55·8 | 622·0 | 55·5 | H |
| 14 0 | 13·93 | 527·8 | 55·3 | 627·7 | 55·0 | H |
| 15 0 | 16·01 | 530·0 | 55·0 | 629·1 | 54·5 | H |
| 16 0 | 15·36 | 530·2 | 54·5 | 631·3 | 54·2 | H |
| 17 7 | 15·25 | 530·2 | 54·2 | 632·8 | 53·6 | H |
| 18 0 | 15·04 | 528·8 | 53·9 | 634·0 | 53·4 | H |
| 19 0 | 15·41 | 533·1 | 53·7 | 629·0 | 53·0 | W |
| 20 0 | 14·65 | 532·7 | 53·3 | 634·5 | 52·7 | W |
| 21 0 | 13·88 | 528·5 | 53·0 | 634·8 | 52·5 | B |
| 22 0 | 14·71 | 523·8 | 52·8 | 638·1 | 52·4 | W |
| 23 0 | 17·04 | 521·1 | 52·7 | 634·0 | 52·4 | W |
| 4 0 0 | 18·99 | 522·3 | 52·7 | 629·7 | 52·6 | W |
| 1 0 | 21·86 | 526·7 | 52·8 | 618·9 | 52·8 | W |
| 2 0 | 22·72 | 529·8 | 52·9 | 623·3 | 53·2 | W |
| 3 0 | 23·07 | 537·0 | 53·1 | 629·6 | 53·5 | W |
| 4 0 | 22·91 | 533·1 | 53·3 | 638·9 | 53·8 | W |
| 5 0 | 18·38 | 534·0 | 53·4 | 644·7 | 53·9 | W |
| 6 0 | 18·87 | 532·1 | 53·4 | 649·3 | 54·0 | H |
| 7 0 | 17·65 | 532·8 | 53·4 | 643·9 | 53·9 | H |
| 8 0 | 14·31 | 531·9 | 53·3 | 648·5 | 53·7 | H |
| 9 0 | 16·72 | 533·8 | 53·2 | 642·1 | 53·5 | H |
| 10 0 | 11·24 | 533·0 | 53·2 | 625·3 | 53·4 | H |
| 11 0 | 14·57 | 529·4 | 53·0 | 631·3 | 53·2 | B |
| 12 0 | 14·82 | 542·0 | 52·9 | 600·1 | 53·0 | B |
| 13 0 | 25 11·99 | 531·0 | 52·8 | 608·7 | 52·8 | B |
| 14 0 | 12·46 | 532·5 | 52·7 | 600·6 | 52·5 | B |
| 15 0 | 14·04 | 528·4 | 52·3 | 623·7 | 52·0 | B |
| 16 0 | 15·04 | 530·8 | 52·0 | 627·9 | 51·7 | B |
| 17 0 | 13·32 | 531·5 | 51·8 | 626·8 | 51·5 | B |
| 18 0 | 15·14 | 533·4 | 51·6 | 628·1 | 51·0 | B |
| 19 0 | 14·71 | 526·8 | 51·2 | 630·2 | 50·8 | H |
| 20 0 | 17·68 | 529·9 | 51·0 | 632·8 | 50·6 | H |
| 21 0 | 15·41 | 526·0 | 50·9 | 638·1 | 50·5 | W |
| 22 0 | 15·20 | 525·0 | 50·7 | 643·4 | 50·5 | H |
| 23 0 | 19·08 | 529·8 | 50·6 | 637·5 | 50·5 | H |
| 5 0 0 | 19·64 | 523·5 | 50·6 | 632·3 | 50·5 | H |
| 1 0 | 20·85 | 523·1 | 50·6 | 628·9 | 50·7 | H |
| 2 0 | 20·92 | 529·3 | 50·7 | 627·9 | 50·9 | H |
| 3 0 | 20·22 | 530·5 | 50·8 | 631·1 | 51·0 | H |
| 4 0 | 19·55 | 536·8 | 51·0 | 637·9 | 51·5 | H |
| 5 0 | 18·74 | 540·1 | 51·3 | 640·5 | 51·9 | H |
| 6 0 | 16·68 | 536·1 | 51·8 | 648·0 | 52·0 | B |
| 7 0 | 18·75 | 533·7 | 51·9 | 648·9 | 52·0 | B |
| 8 0 | 18·41 | 536·8 | 51·9 | 652·0 | 52·0 | B |
| 9 0† | 08·56 | 538·0 | 51·7 | 639·2 | 51·5 | B |
| 10 0† | 10·13 | 526·3 | 51·4 | 639·4 | 51·3 | B |
| 11 0 | 13·74 | 530·1 | 51·0 | 637·3 | 51·0 | W |
| 12 0 | 13·77 | 530·9 | 50·8 | 632·0 | 50·5 | W |
| 6 13 0 | 25 15·74 | 531·1 | 48·9 | 628·7 | 48·7 | H |
| 14 0 | 15·99 | 534·1 | 48·7 | 630·4 | 48·3 | H |
| 15 0 | 15·32 | 532·4 | 48·2 | 631·9 | 47·9 | H |
| 16 0 | 15·81 | 530·4 | 47·9 | 632·6 | 47·4 | H |
| 17 0 | 15·45 | 530·1 | 47·5 | 632·4 | 47·0 | H |
| 18 0 | 15·14 | 531·0 | 47·0 | 632·9 | 46·8 | H |
| 19 0 | 15·04 | 529·8 | 46·8 | 615·1 | 46·2 | W |
| 20 0 | 12·01 | 529·9 | 46·4 | 634·7 | 45·8 | W |

| Göttingen Mean Time of Declination Obs. | Declination. | Bifilar. Corrected. | Bifilar. Thermometer. | Balance. Corrected. | Balance. Thermometer. | Observer's Initial. |
|---|---|---|---|---|---|---|
| d. h. m. | ° ′ | Sc. Div. | ° | Mic. Div. | ° | |
| 6 21 0 | 25 13·29 | 527·2 | 46·0 | 636·5 | 45·5 | B |
| 22 0 | 13·32 | 525·8 | 45·8 | 635·3 | 45·4 | W |
| 23 0 | 14·65 | 524·8 | 45·7 | 626·5 | 45·6 | W |
| 7 0 0 | 17·74 | 528·2 | 45·8 | 628·9 | 46·3 | W |
| 1 0 | 20·18 | 528·9 | 46·3 | 628·9 | 47·0 | W |
| 2 0 | 19·12 | 528·0 | 47·0 | 634·8 | 47·9 | W |
| 3 0 | 18·21 | 533·1 | 47·7 | 635·2 | 48·6 | W |
| 4 0 | 17·13 | 541·4 | 48·2 | 633·7 | 49·2 | W |
| 5 0 | 15·67 | 537·9 | 48·8 | 632·7 | 49·5 | W |
| 6 0 | 15·59 | 538·0 | 49·1 | 634·3 | 49·7 | H |
| 7 0 | 15·22 | 537·1 | 49·1 | 632·3 | 49·5 | H |
| 8 0 | 15·09 | 538·7 | 49·1 | 631·2 | 49·5 | H |
| 9 0 | 14·68 | 536·5 | 49·0 | 632·1 | 49·3 | H |
| 10 0† | 09·69 | 542·0 | 48·7 | 625·7 | 49·0 | H |
| 11 0† | 12·35 | 543·5 | 48·4 | 610·5 | 48·5 | B |
| 12 0 | 09·12 | 533·4 | 48·0 | 606·3 | 48·0 | B |
| 13 0 | 25 09·05 | 529·0 | 47·6 | 609·6 | 47·5 | B |
| 14 0 | 11·84 | 527·2 | 47·1 | 610·5 | 46·7 | B |
| 15 0 | 16·15 | 523·9 | 46·6 | 603·4 | 46·0 | B |
| 16 0 | 11·99 | 531·5 | 46·0 | 595·6 | 45·5 | B |
| 17 0 | 11·57 | 521·2 | 45·5 | 608·6 | 45·0 | B |
| 18 0 | 15·15 | 532·7 | 45·0 | 607·3 | 44·5 | B |
| 19 0 | 12·98 | 532·1 | 44·6 | 615·7 | 44·0 | H |
| 20 0 | 12·36 | 530·2 | 44·1 | 627·4 | 43·7 | H |
| 21 0 | 12·42 | 529·6 | 43·8 | 629·2 | 43·4 | W |
| 22 0 | 13·96 | 525·3 | 43·5 | 629·8 | 43·2 | H |
| 23 0 | 16·43 | 522·0 | 43·2 | 628·3 | 43·2 | H |
| 8 0 0 | 18·90 | 507·2 | 43·2 | 629·6 | 43·5 | H |
| 1 0 | 20·96 | 530·1 | 43·3 | 630·1 | 43·7 | H |
| 2 0 | 21·46 | 529·4 | 43·6 | 639·5 | 44·3 | H |
| 3 0 | 20·74 | 527·0 | 44·0 | 645·0 | 45·0 | H |
| 4 0 | 18·97 | 536·5 | 44·6 | 644·2 | 45·5 | H |
| 5 0 | 16·89 | 537·1 | 45·0 | 646·0 | 46·0 | H |
| 6 0 | 15·96 | 536·3 | 45·6 | 642·0 | 46·2 | B |
| 7 0 | 15·67 | 538·6 | 45·9 | 638·1 | 46·5 | B |
| 8 0 | 15·38 | 539·2 | 46·1 | 633·7 | 46·8 | B |
| 9 0 | 15·05 | 538·1 | 46·3 | 633·8 | 47·0 | B |
| 10 0 | 14·62 | 537·0 | 46·5 | 632·4 | 47·0 | B |
| 11 0 | 15·20 | 537·8 | 46·7 | 635·3 | 47·3 | W |
| 12 0 | 14·10 | 536·8 | 46·8 | 634·7 | 47·4 | W |
| 13 0 | 25 13·19 | 534·6 | 46·9 | 632·7 | 47·5 | W |
| 14 0 | 11·55 | 532·9 | 46·9 | 629·7 | 47·5 | W |
| 15 0 | 15·02 | 534·9 | 47·0 | 623·3 | 47·6 | W |
| 16 0 | 13·03 | 535·6 | 47·0 | 612·6 | 47·6 | W |
| 17 0 | 13·20 | 537·1 | 47·0 | 615·6 | 47·5 | W |
| 18 0 | 13·76 | 535·9 | 47·0 | 619·6 | 47·5 | W |
| 19 0 | 13·25 | 535·3 | 47·0 | 623·1 | 47·5 | B |
| 20 0 | 13·10 | 534·0 | 47·0 | 626·9 | 47·4 | B |
| 21 0 | 12·98 | 530·2 | 47·0 | 629·6 | 47·4 | H |
| 22 0 | 15·38 | 527·3 | 47·0 | 630·8 | 47·4 | H |
| 23 0 | 17·63 | 524·7 | 47·0 | 627·2 | 47·5 | H |
| 9 0 0 | 20·30 | 532·7 | 47·1 | 625·6 | 47·7 | B |
| 1 0 | 19·79 | 530·2 | 47·4 | 628·9 | 47·9 | B |
| 2 0 | 20·29 | 532·4 | 47·6 | 632·8 | 48·2 | H |
| 3 0 | 18·65 | 532·6 | 47·8 | 636·2 | 48·3 | H |
| 4 0 | 15·92 | 532·5 | 47·8 | 636·2 | 48·5 | H |

DECLINATION. Torsion removed, Oct. 6d 19h, − 10¼°. Effect of + 10° of Torsion = − 0′·84.
BIFILAR. Observed 2m after the Declination, $k$=0·000140. BALANCE. Observed 3m after the Declination, $k$=0·0000085.

† Extra Observations made.
Oct. 6d 19h + The observation for the torsion of the declinometer thread was not good; the amount may have been less than that stated, but no time was left to determine.
Oct. 6d—7d. Experiments made to determine the effect of the copper ring on the declination magnet.

| Göttingen Mean Time of Declination Obs. | Declination. | Bifilar. | | Balance. | | Observer's Initial. |
|---|---|---|---|---|---|---|
| | | Corrected. | Thermometer. | Corrected. | Thermometer. | |
| d. h. m. | ° ′ | Sc. Div. | ° | Mic. Div. | ° | |
| 9 5 0 | 25 15·32 | 534·6 | 48·0 | 635·2 | 48·8 | H |
| 6 0 | 14·91 | 535·2 | 48·1 | 629·7 | 49·0 | W |
| 7 0 | 14·68 | 539·0 | 48·4 | 626·4 | 49·2 | W |
| 8 0 | 14·89 | 538·7 | 48·7 | 624·8 | 49·4 | W |
| 9 0 | 14·75 | 537·8 | 48·8 | 624·8 | 49·5 | W |
| 10 0 | 14·06 | 539·3 | 49·0 | 624·7 | 49·7 | W |
| 11 0 | 14·26 | 536·7 | 49·1 | 624·6 | 49·9 | H |
| 12 0 | 14·44 | 535·6 | 49·4 | 624·0 | 50·2 | H |
| 13 0 | 25 14·67 | 536·3 | 49·8 | 623·4 | 50·7 | H |
| 14 0 | 14·21 | 535·7 | 50·0 | 619·0 | 50·9 | H |
| 15 0 | 13·49 | 536·2 | 50·3 | 616·0 | 51·3 | H |
| 16 0 | 13·97 | 536·1 | 50·6 | 614·2 | 51·7 | H |
| 17 0 | 13·74 | 536·9 | 50·8 | 613·2 | 51·8 | H |
| 18 0 | 12·49 | 535·7 | 51·0 | 611·8 | 51·8 | H |
| 19 0 | 14·04 | 535·2 | 51·0 | 614·1 | 51·9 | W |
| 20 0 | 13·29 | 534·7 | 51·1 | 617·4 | 51·7 | W |
| 21 0 | 12·35 | 531·2 | 51·0 | 619·5 | 51·7 | B |
| 22 0 | 13·23 | 526·9 | 51·0 | 618·3 | 51·6 | W |
| 23 5 | 16·05 | 526·0 | 51·2 | 615·5 | 52·0 | W |
| 10 0 0 | 18·10 | 526·9 | 51·7 | 611·4 | 52·5 | B |
| 1 0 | 19·31 | 528·9 | 52·1 | 608·8 | 53·2 | W |
| 2 0 | 19·39 | 531·5 | 52·8 | 606·1 | 54·0 | W |
| 3 0 | 18·99 | 536·2 | 53·4 | 610·8 | 54·8 | W |
| 4 0 | 16·90 | 536·7 | 54·0 | 616·4 | 55·5 | W |
| 5 0 | 15·85 | 536·7 | 54·8 | 618·5 | 56·0 | W |
| 6 0 | 15·64 | 536·8 | 55·2 | 611·5 | 56·2 | H |
| 7 0 | 14·96 | 541·1 | 55·5 | 613·0 | 56·5 | H |
| 8 0 | 15·36 | 537·5 | 55·7 | 616·4 | 56·3 | H |
| 9 0 | 13·63 | 538·1 | 55·5 | 617·6 | 56·0 | H |
| 10 0 | 15·01 | 537·8 | 55·2 | 616·1 | 55·7 | H |
| 11 0 | 14·60 | 336·1 | 54·9 | 615·0 | 55·3 | B |
| 12 0 | 15·36 | 534·5 | 54·6 | 615·1 | 54·9 | B |
| 13 0 | 25 14·37 | 536·3 | 54·2 | 612·4 | 54·5 | B |
| 14 0 | 14·06 | 535·1 | 53·9 | 614·2 | 54·0 | B |
| 15 0 | 13·69 | 534·9 | 53·6 | 613·4 | 53·5 | B |
| 16 0 | 14·06 | 535·2 | 53·2 | 613·8 | 53·1 | B |
| 17 0 | 14·23 | 535·8 | 52·9 | 613·6 | 52·8 | B |
| 18 0 | 14·18 | 535·7 | 52.7 | 613·7 | 52·5 | B |
| 19 0 | 13·90 | 534·6 | 52·3 | 614·9 | 52·2 | H |
| 20 0 | 13·59 | 533·3 | 52·2 | 619·4 | 52·0 | H |
| 21 0 | 12·98 | 528·8 | 52·0 | 621·6 | 51·9 | W |
| 22 0 | 13·84 | 524·5 | 51·8 | 622·7 | 52·0 | H |
| 23 0 | 16·23 | 526·3 | 52·0 | 621·0 | 52·3 | W |
| 11 0 0 | 18·58 | 527·5 | 52·1 | 615·7 | 52·6 | H |
| 1 0 | 19·71 | 532·8 | 52·4 | 611·9 | 53·1 | H |
| 2 0 | 19·04 | 535·0 | 52·8 | 614·6 | 53·7 | H |
| 3 0 | 18·21 | 538·9 | 53·3 | 615·3 | 54·2 | H |
| 4 0 | 16·82 | 539·0 | 53·8 | 617·8 | 54·8 | H |
| 5 0 | 15·96 | 539·4 | 54·1 | 613·6 | 55·0 | H |
| 6 0 | 15·31 | 538·4 | 54·5 | 612·4 | 55·1 | B |
| 7 0 | 15·38 | 539·4 | 54·6 | 609·7 | 55·1 | B |
| 8 0 | 15·01 | 538·6 | 54·6 | 609·8 | 55·1 | B |
| 9 0 | 15·01 | 538·2 | 54·5 | 609·6 | 55·0 | B |
| 10 0 | 14·21 | 542·0 | 54·3 | 606·1 | 54·8 | B |
| 11 0 | 13·64 | 535·3 | 54·1 | 611·5 | 54·5 | W |
| 12 0 | 14·41 | 534·9 | 53·9 | 610·7 | 54·1 | W |

| Göttingen Mean Time of Declination Obs. | Declination. | Bifilar. | | Balance. | | Observer's Initial. |
|---|---|---|---|---|---|---|
| | | Corrected. | Thermometer. | Corrected. | Thermometer. | |
| d. h. m. | ° ′ | Sc. Div. | ° | Mic. Div. | ° | |
| 11 13 0 | 25 13·86 | 534·5 | 53·6 | 613·0 | 53·6 | W |
| 14 0 | 13·63 | 533·7 | 53·1 | 613·9 | 53·0 | W |
| 15 0 | 13·93 | 533·9 | 52·8 | 616·7 | 52·7 | W |
| 16 0 | 12·96 | 534·3 | 52·5 | 615·5 | 52·2 | W |
| 17 0 | 13·54 | 535·1 | 52·0 | 614·6 | 51·8 | W |
| 18 0 | 13·52 | 535·3 | 51·7 | 612·7 | 51·3 | W |
| 19 0 | 13·52 | 528·7 | 51·4 | 610·5 | 50·6 | H |
| 20 0 | 13·20 | 532·7 | 50·9 | 613·9 | 50·3 | H |
| 21 0 | 12·93 | 529·5 | 50·7 | 619·5 | 49·9 | B |
| 22 0 | 13·49 | 525·3 | 50·3 | 617·2 | 49·7 | B |
| 23 0 | 16·21 | 522·4 | 50·0 | 615·6 | 49·8 | B |
| 12 0 0 | 18·01 | 522·5 | 50·0 | 617·9 | 50·0 | H |
| 1 0 | 20·32 | 526·0 | 50·2 | 615·9 | 50·5 | H |
| 2 0 | 21·43 | 532·7 | 50·4 | 615·0 | 51·0 | H |
| 3 0 | 19·93 | 533·9 | 51·0 | 619·9 | 51·5 | H |
| 4 0 | 18·37 | 536·2 | 51·4 | 624·4 | 52·0 | H |
| 5 0 | 16·28 | 538·1 | 51·7 | 623·5 | 52·2 | H |
| 6 0 | 15·78 | 540·2 | 51·9 | 619·8 | 52·5 | W |
| 7 0 | 16·30 | 538·7 | 52·0 | 617·7 | 52·7 | W |
| 8 0 | 15·20 | 540·3 | 52·3 | 614·8 | 52·9 | W |
| 9 0 | 14·48 | 540·7 | 52·3 | 613·8 | 53·0 | W |
| 10 0 | 14·35 | 539·8 | 52·4 | 612·5 | 53·0 | W |
| 11 0 | 14·28 | 539·7 | 52·6 | 611·8 | 53·2 | H |
| 12 0 | 14·11 | 538·7 | 52·7 | 610·4 | 53·3 | H |
| 13 13 0 | 25 09·71 | 543·2 | 55·5 | 606·0 | 55·8 | B |
| 14 0 | 10·38 | 536·0 | 55·4 | 606·0 | 55·7 | B |
| 15 0 | 11·57 | 539·2 | 55·3 | 602·0 | 55·6 | B |
| 16 0 | 11·77 | 537·4 | 55·1 | 603·7 | 55·5 | B |
| 17 0 | 14·31 | 540·1 | 55·0 | 602·9 | 55·2 | B |
| 18 0 | 13·66 | 539·7 | 54·9 | 603·3 | 54·9 | B |
| 19 0 | 12·60 | 537·5 | 54·6 | 605·7 | 54·6 | H |
| 20 0 | 12·93 | 537·4 | 54·4 | 607·1 | 54·3 | H |
| 21 0 | 11·86 | 533·5 | 54·1 | 608·3 | 54·1 | W |
| 22 0 | 12·28 | 529·5 | 53·9 | 611·2 | 54·0 | H |
| 23 0 | 14·28 | 228·0 | 53·9 | 609·4 | 54·1 | H |
| 14 0 0 | 17·54 | 527·9 | 53·9 | 604·1 | 54·2 | H |
| 1 0 | 19·76 | 529·6 | 53·9 | 603·4 | 54·3 | H |
| 2 0 | 20·92 | 531·6 | 53·9 | 605·0 | 54·5 | H |
| 3 0 | 19·69 | 534·1 | 54·1 | 606·4 | 54·6 | H |
| 4 0 | 18·47 | 539·0 | 54·3 | 610·3 | 54·8 | H |
| 5 0 | 16·46 | 538·7 | 54·5 | 615·9 | 55·0 | H |
| 6 0 | 15·67 | 542·6 | 54·7 | 612·6 | 55·0 | B |
| 7 0 | 15·88 | 542·4 | 54·7 | 610·4 | 55·0 | B |
| 8 0 | 16·41 | 542·4 | 54·6 | 609·8 | 54·9 | B |
| 9 0 | 13·49 | 538·2 | 54·4 | 615·3 | 54·7 | B |
| 10 0 | 13·54 | 538·2 | 54·2 | 613·3 | 54·3 | B |
| 11 0 | 11·62 | 535·8 | 54·0 | 618·6 | 54·0 | W |
| 12 0 | 12·80 | 533·2 | 53·6 | 615·8 | 53·4 | W |
| 13 0 | 25 14·71 | 534·2 | 53·2 | 608·6 | 53·0 | W |
| 14 0 | 15·52 | 532·9 | 52·9 | 605·5 | 52·6 | W |
| 15 0 | 14·80 | 536·6 | 52·7 | 598·4 | 52·4 | W |
| 16 0 | 14·87 | 533·5 | 52·4 | 602·8 | 52·1 | W |
| 17 0 | 12·90 | 534·8 | 52·1 | 602·7 | 51·9 | W |
| 18 0 | 14·65 | 535·9 | 51·9 | 601·5 | 51·6 | W |
| 19 0 | 14·41 | 536·6 | 51·8 | 597·5 | 51·3 | B |
| 20 0 | 12·26 | 536·7 | 51·6 | 601·1 | 51·0 | B |

DECLINATION. Magnet untouched, Oct. $6^d$—$16^d$.

BIFILAR. Observed $2^m$ after the Declination, $k=0{\cdot}000140$. BALANCE. Observed $3^m$ after the Declination, $k=0{\cdot}0000085$.

| Göttingen Mean Time of Declination Obs. | Declination. | Bifilar. | | Balance. | | Observer's Initial. |
|---|---|---|---|---|---|---|
| | | Corrected. | Thermometer. | Corrected. | Thermometer. | |
| d. h. m. | ° ′ | Sc. Div. | ° | Mic. Div. | ° | |
| 14 21 0 | 25 13·52 | 525·3 | 51·4 | 610·1 | 50·9 | H |
| 22 0 | 14·15 | 526·2 | 51·2 | 611·3 | 50·8 | H |
| 23 0 | 15·76 | 525·5 | 51·0 | 610·8 | 50·8 | B |
| 15 0 0 | 19·10 | 526·8 | 51·0 | 607·0 | 51·0 | B |
| 1 0 | 21·06 | 526·0 | 51·2 | 610·5 | 51·5 | H |
| 2 0 | 21·68 | 531·1 | 51·6 | 608·5 | 52·1 | B |
| 3 0 | 20·42 | 534·7 | 52·1 | 611·4 | 52·7 | H |
| 4 0 | 18·79 | 536·6 | 52·6 | 619·1 | 53·3 | B |
| 5 0 | 17·36 | 537·4 | 53·0 | 626·1 | 53·8 | B |
| 6 0 | 16·05 | 536·7 | 53·4 | 624·5 | 54·1 | W |
| 7 0 | 15·14 | 537·6 | 53·6 | 620·4 | 54·2 | W |
| 8 0 | 13·49 | 538·8 | 53·6 | 615·5 | 54·0 | W |
| 9 0 | 13·70 | 539·0 | 53·6 | 614·7 | 54·0 | W |
| 10 0 | 13·44 | 538·3 | 53·4 | 610·8 | 53·8 | W |
| 11 0 | 12·98 | 537·3 | 53·2 | 609·7 | 53·5 | H |
| 12 0 | 12·58 | 537·7 | 53·0 | 604·5 | 53·0 | H |
| 13 0 | 25 10·90 | 534·7 | 52·8 | 601·5 | 52·8 | H |
| 14 0 | 12·08 | 541·2 | 52·6 | 593·5 | 52·6 | H |
| 15 0 | 13·22 | 534·5 | 52·4 | 600·6 | 52·5 | H |
| 16 0 | 14·06 | 535·6 | 52·2 | 604·7 | 52·3 | H |
| 17 0 | 14·20 | 536·7 | 52·0 | 603·9 | 52·0 | H |
| 18 0 | 13·81 | 536·3 | 51·8 | 607·2 | 51·7 | H |
| 19 0 | 13·36 | 538·1 | 51·6 | 609·6 | 51·5 | W |
| 20 0 | 12·31 | 536·5 | 51·3 | 613·6 | 51·1 | W |
| 21 0 | 11·77 | 532·0 | 51·1 | 617·7 | 50·9 | B |
| 22 0 | 12·20 | 528·6 | 51·0 | 617·8 | 50·7 | W |
| 23 0 | 15·02 | 522·9 | 50·9 | 613·2 | 50·7 | W |
| 16 0 0 | 15·62 | 524·1 | 50·9 | 610·2 | 50·9 | W |
| 1 0 | 19·32 | 526·9 | 51·0 | 610·1 | 51·5 | W |
| 2 0 | 20·29 | 532·2 | 51·4 | 609·3 | 52·1 | W |
| 3 0 | 19·07 | 534·5 | 52·0 | 613·7 | 52·8 | W |
| 4 0 | 17·29 | 536·4 | 52·6 | 613·7 | 53·3 | W |
| 5 0 | 16·12 | 537·0 | 52·9 | 613·6 | 53·5 | W |
| 6 0 | 14·67 | 537·6 | 53·0 | 610·4 | 53·6 | H |
| 7 0 | 14·40 | 538·3 | 53·0 | 609·1 | 53·6 | H |
| 8 0 | 14·11 | 537·6 | 53·0 | 609·1 | 53·5 | H |
| 9 0 | 14·21 | 538·3 | 52·9 | 607·9 | 53·3 | H |
| 10 0 | 13·79 | 539·1 | 52·7 | 604·7 | 53·0 | H |
| 11 0 | 13·43 | 538·3 | 52·6 | 603·9 | 52·7 | B |
| 12 0 | 12·92 | 537·9 | 52·3 | 600·4 | 52·3 | B |
| 13 0 | 25 14·13 | 534·9 | 52·0 | 601·5 | 52·0 | B |
| 14 0 | 16·26 | 540·1 | 51·8 | 587·3 | 51·7 | B |
| 15 0 | 13·17 | 537·7 | 51·6 | 587·5 | 51·5 | B |
| 16 0 | 13·16 | 537·2 | 51·3 | 592·2 | 51·2 | B |
| 17 0 | 12·67 | 537·7 | 51·1 | 596·2 | 51·0 | B |
| 18 0 | 13·25 | 538·0 | 50·9 | 600·4 | 50·7 | B |
| 19 0 | 13·83 | 536·1 | 50·7 | 603·7 | 50·5 | H |
| 20 0 | 12·08 | 535·9 | 50·6 | 610·9 | 50·3 | H |
| 21 0 | 11·22 | 531·9 | 50·4 | 616·0 | 50·2 | W |
| 22 0 | 11·91 | 527·0 | 50·2 | 618·2 | 50·1 | H |
| 23 0 | 14·41 | 522·7 | 50·1 | 616·4 | 50·1 | H |
| 17 0 0 | 19·22 | 525·4 | 50·1 | 611·5 | 50·0 | H |
| 1 0 | 20·63 | 526·8 | 50·0 | 609·0 | 50·0 | H |
| 2 0 | 20·38 | 530·7 | 50·1 | 607·6 | 50·2 | H |
| 3 0 | 20·55 | 539·2 | 50·1 | 616·5 | 50·3 | H |
| 4 0 | 19·19 | 535·2 | 50·2 | 626·2 | 50·5 | H |

| Göttingen Mean Time of Declination Obs. | Declination. | Bifilar. | | Balance. | | Observer's Initial. |
|---|---|---|---|---|---|---|
| | | Corrected. | Thermometer. | Corrected. | Thermometer. | |
| d. h. m. | ° ′ | Sc. Div. | ° | Mic. Div. | ° | |
| 17 5 0 | 25 17·83 | 535·6 | 50·3 | 631·8 | 50·6 | H |
| 6 0 | 17·89 | 533·1 | 50·4 | 630·7 | 50·5 | B |
| 7 0 | 15·81 | 533·3 | 50·4 | 631·0 | 50·4 | W |
| 8 6 | 15·27 | 534·6 | 50·4 | 634·4 | 50·4 | H |
| 9 0 | 13·83 | 533·6 | 50·2 | 631·2 | 50·3 | B |
| 10 0 | 10·56 | 530·6 | 50·0 | 632·9 | 50·0 | B |
| 11 0 | 09·74 | 530·6 | 50·0 | 628·3 | 49·9 | W |
| 12 0 | 11·42 | 533·7 | 49·9 | 622·4 | 49·8 | W |
| 13 0 | 25 10·11 | 532·5 | 49·7 | 618·6 | 49·6 | W |
| 14 0 | 11·30 | 535·7 | 49·6 | 612·5 | 49·5 | W |
| 15 0 | 13·57 | 535·3 | 49·4 | 614·3 | 49·3 | W |
| 16 0 | 12·65 | 536·0 | 49·2 | 614·0 | 49·1 | W |
| 17 0 | 14·20 | 534·8 | 49·0 | 616·6 | 49·0 | W |
| 18 0 | 14·48 | 539·8 | 48·9 | 611·5 | 48·8 | W |
| 19 0 | 12·45 | 536·9 | 48·8 | 613·0 | 48·5 | B |
| 20 0 | 12·02 | 535·3 | 48·7 | 618·7 | 48·4 | B |
| 21 0 | 11·37 | 534·8 | 48·5 | 618·5 | 48·3 | H |
| 22 0 | 12·72 | 528·4 | 48·3 | 616·0 | 48·2 | H |
| 23 0 | 16·66 | 521·9 | 48·3 | 614·4 | 48·2 | B |
| 18 0 0 | 21·74 | 530·7 | 48·3 | 612·5 | 48·5 | H |
| 1 0 | 23·22 | 534·7 | 48·5 | 612·1 | 48·8 | H |
| 2 0 | 24·39 | 535·2 | 48·9 | 613·8 | 49·5 | B |
| 3 0 | 22·87 | 539·2 | 49·3 | 614·8 | 49·9 | B |
| 4 0 | 21·71 | 538·1 | 49·7 | 625·7 | 50·2 | H |
| 5 0 | 18·57 | 536·7 | 49·9 | 636·1 | 50·2 | B |
| 6 0 | 18·50 | 536·4 | 49·9 | 633·6 | 50·3 | W |
| 7 0 | 16·86 | 538·4 | 49·9 | 632·1 | 50·3 | W |
| 8 0 | 14·98 | 540·2 | 49·8 | 626·2 | 50·0 | W |
| 9 0 | 14·10 | 539·5 | 49·7 | 622·7 | 49·8 | W |
| 10 0 | 13·44 | 540·0 | 49·4 | 618·2 | 49·5 | W |
| 11 0 | 13·34 | 539·6 | 49·0 | 614·7 | 49·0 | H |
| 12 0 | 12·96 | 539·8 | 48·7 | 614·8 | 48·4 | H |
| 13 0 | 25 13·84 | 538·9 | 48·2 | 613·1 | 47·7 | H |
| 14 0 | 13·56 | 538·3 | 47·7 | 612·9 | 47·0 | H |
| 15 0 | 13·63 | 536·6 | 47·2 | 614·0 | 46·4 | H |
| 16 0 | 13·59 | 538·8 | 46·7 | 614·7 | 45·7 | H |
| 17 0 | 13·39 | 536·4 | 46·0 | 616·6 | 45·2 | H |
| 18 0 | 14·67 | 536·1 | 45·5 | 618·4 | 44·5 | H |
| 19 0 | 13·83 | 537·2 | 45·0 | 621·7 | 44·0 | W |
| 20 0 | 13·03 | 535·4 | 44·5 | 625·7 | 43·4 | W |
| 21 2 | 12·42 | 532·0 | 43·9 | 631·4 | 42·9 | B |
| 22 0 | 13·50 | 527·9 | 43·5 | 632·4 | 42·5 | W |
| 23 0 | 16·13 | 526·9 | 43·1 | 622·9 | 42·4 | W |
| 19 0 0 | 18·84 | 528·3 | 42·9 | 620·6 | 42·4 | W |
| 1 0 | 18·79 | 530·5 | 42·9 | 622·9 | 42·5 | W |
| 2 0 | 18·88 | 533·9 | 42·9 | 628·5 | 43·2 | W |
| 3 0 | 18·50 | 535·1 | 43·3 | 630·6 | 43·9 | W |
| 4 0 | 17·37 | 537·8 | 44·0 | 633·9 | 44·8 | W |
| 5 0 | 15·96 | 539·2 | 44·9 | 633·2 | 45·5 | W |
| 6 0 | 15·98 | 542·1 | 45·4 | 630·9 | 46·0 | H |
| 7 0 | 15·31 | 540·9 | 45·7 | 628·5 | 46·2 | H |
| 8 0 | 14·41 | 542·0 | 45·8 | 627·1 | 46·3 | H |
| 9 0 | 12·80 | 539·7 | 45·8 | 628·0 | 46·0 | H |
| 10 0 | 12·72 | 548·5 | 45·7 | 617·5 | 45·7 | H |
| 11 0 | 12·16 | 548·6 | 45·4 | 609·4 | 45·5 | B |
| 12 0 | 11·17 | 538·0 | 45·0 | 605·6 | 45·2 | B |

DECLINATION. Torsion removed, Oct. $16^d\ 4^h$, + 9½°. Effect of + 10° of Torsion = − 0′·84.
BIFILAR. Observed $2^m$ after the Declination, $k$=0·000140. BALANCE. Observed $3^m$ after the Declination, $k$=0·0000085.

Oct. $15^d\ 4^h$ + Experiments were made to determine the effect of the copper ring on the position of the declination magnet. All the scale readings since Oct. $6^d\ 23^h$ have been corrected by + 1·7 Sc. div. for the effect of the copper ring in the position which it has occupied since that time. The use of the copper ring was discontinued after Oct. $15^d\ 4^h$.
Oct. $15^d\ 23^h$—$16^d\ 4^h$. Observations made to determine the zero point of the declination scale.

| Göttingen Mean Time of Declination Obs. | | | Declination. | Bifilar. | | Balance. | | Observer's Initial. |
|---|---|---|---|---|---|---|---|---|
| | | | | Corrected. | Thermometer. | Corrected. | Thermometer. | |
| d. | h. | m. | ° ′ | Sc. Div. | ° | Mic. Div. | ° | |
| 20 | 13 | 0 | 25 14·60 | 532·5 | 43·7 | 638·0 | 43·6 | W |
| | 14 | 0† | 11·21 | 521·9 | 43·3 | 618·3 | 43·2 | W |
| | 15 | 0† | 14·71 | 507·0 | 43·0 | 389·9 | 42·9 | W |
| | 16 | 0† | 21·21 | 536·0 | 42·7 | 314·4 | 42·6 | W |
| | 17 | 0† | 25·16 | 501·7 | 42·4 | 142·8 | 42·3 | W |
| | 18 | 0† | 28·01 | 460·5 | 42·0 | 334·7 | 42·0 | W |
| | 19 | 0† | 36·52 | 503·1 | 41·8 | 338·4 | 41·5 | B |
| | 20 | 0† | 19·75 | 519·8 | 41·5 | 510·6 | 41·2 | B |
| | 21 | 0† | 17·33 | 510·3 | 41·2 | 557·5 | 40·7 | H |
| | 22 | 0† | 22·69 | 468·8 | 40·8 | 625·4 | 40·7 | H |
| | 23 | 0† | 26·30 | 508·9 | 40·7 | 676·4 | 40·8 | B |
| 21 | 0 | 0† | 23·99 | 496·2 | 40·8 | 690·2 | 41·5 | B |
| | 1 | 0† | 31·36 | 519·6 | 41·3 | 685·2 | 42·2 | H |
| | 2 | 0† | 25·11 | 532·6 | 42·2 | 714·4 | 43·6 | H |
| | 3 | 0† | 13·76 | 533·3 | 43·2 | 763·2 | 44·7 | B |
| | 4 | 0† | 19·84 | 526·7 | 44·2 | 704·9 | 45·6 | B |
| | 5 | 0† | 19·24 | 521·6 | 45·1 | 683·6 | 46·3 | B |
| | 6 | 0† | 16·70 | 524·7 | 45·6 | 651·0 | 46·7 | W |
| | 7 | 0† | 07·31 | 530·1 | 46·0 | 638·2 | 47·0 | W |
| | 8 | 0 | 13·59 | 525·0 | 46·3 | 627·5 | 47·4 | W |
| | 9 | 0† | 05·87 | 555·8 | 46·6 | 593·5 | 47·4 | W |
| | 10 | 0† | 07·78 | 533·9 | 46·6 | 556·0 | 47·4 | W |
| | 11 | 0† | 06·03 | 535·7 | 46·5 | 539·7 | 47·3 | H |
| | 12 | 0 | 07·67 | 525·3 | 46·4 | 549·0 | 47·2 | H |
| | 13 | 0 | 25 12·65 | 523·5 | 46·2 | 573·2 | 46·7 | H |
| | 14 | 0 | 14·55 | 527·1 | 46·0 | 579·9 | 46·3 | H |
| | 15 | 0 | 15·56 | 518·6 | 45·8 | 585·6 | 46·0 | H |
| | 16 | 0 | 16·92 | 527·2 | 45·4 | 542·3 | 45·5 | H |
| | 17 | 0 | 15·47 | 532·1 | 45·0 | 561·5 | 45·3 | H |
| | 18 | 0 | 12·58 | 533·8 | 44·8 | 573·9 | 45·0 | H |
| | 19 | 0 | 12·89 | 530·0 | 44·6 | 591·3 | 44·6 | W |
| | 20 | 0 | 13·30 | 527·0 | 44·2 | 598·8 | 44·2 | W |
| | 21 | 0 | 13·29 | 521·1 | 43·9 | 608·5 | 43·8 | B |
| | 22 | 0 | 14·24 | 521·0 | 43·7 | 613·3 | 43·6 | W |
| | 23 | 0 | 15·98 | 516·6 | 43·5 | 617·7 | 43·5 | W |
| 22 | 0 | 0 | 20·15 | 526·1 | 43·4 | 620·9 | 43·8 | W |
| | 1 | 0 | 21·09 | 524·2 | 43·7 | 626·7 | 44·5 | W |
| | 2 | 0 | 20·20 | 530·8 | 44·3 | 633·3 | 45·5 | W |
| | 3 | 0 | 19·96 | 534·9 | 45·3 | 634·9 | 46·7 | W |
| | 4 | 0 | 11·41 | 534·8 | 46·4 | 653·2 | 47·8 | W |
| | 5 | 0 | 15·85 | 532·0 | 47·6 | 630·2 | 48·7 | W |
| | 6 | 0 | 13·02 | 534·0 | 48·3 | 618·2 | 49·2 | H |
| | 7 | 0 | 14·08 | 534·4 | 48·7 | 618·1 | 49·5 | H |
| | 8 | 0 | 14·13 | 532·5 | 48·8 | 615·5 | 49·3 | H |
| | 9 | 0 | 03·58 | 532·9 | 48·6 | 616·2 | 49·0 | H |
| | 10 | 0 | 11·17 | 531·5 | 48·3 | 611·4 | 48·5 | H |
| | 11 | 0 | 14·46 | 532·7 | 47·9 | 608·8 | 47·8 | B |
| | 12 | 0 | 13·86 | 531·4 | 47·3 | 608·9 | 47·1 | B |
| | 13 | 0 | 25 14·75 | 533·5 | 46·8 | 609·0 | 46·5 | B |
| | 14 | 0 | 13·88 | 529·5 | 46·3 | 607·9 | 45·8 | B |
| | 15 | 0 | 18·87 | 533·4 | 45·8 | 575·8 | 45·1 | B |
| | 16 | 0 | 16·18 | 528·3 | 45·1 | 577·6 | 44·5 | B |
| | 17 | 0 | 12·69 | 534·5 | 44·5 | 574·5 | 43·8 | B |
| | 18 | 0 | 12·01 | 534·0 | 43·9 | 579·8 | 43·0 | B |
| | 19 | 0 | 13·86 | 533·9 | 43·3 | 582·8 | 42·3 | H |
| | 20 | 0 | 14·30 | 524·4 | 42·7 | 595·9 | 41·7 | H |

| Göttingen Mean Time of Declination Obs. | | | Declination. | Bifilar. | | Balance. | | Observer's Initial. |
|---|---|---|---|---|---|---|---|---|
| | | | | Corrected. | Thermometer. | Corrected. | Thermometer. | |
| d. | h. | m. | ° ′ | Sc. Div. | ° | Mic. Div. | ° | |
| 22 | 21 | 0 | 25 15·05 | 524·1 | 42·1 | 606·4 | 41·0 | W |
| | 22 | 0 | 15·50 | 520·3 | 41·7 | 609·1 | 40·5 | H |
| | 23 | 0 | 18·52 | 517·3 | 41·2 | 616·7 | 40·6 | H |
| 23 | 0 | 0 | 22·08 | 521·4 | 41·0 | 618·6 | 40·7 | H |
| | 1 | 0 | 22·08 | 524·7 | 41·1 | 626·0 | 41·2 | H |
| | 2 | 0 | 22·77 | 527·3 | 41·3 | 632·9 | 42·0 | H |
| | 3 | 0 | 16·82 | 526·5 | 42·0 | 651·6 | 43·2 | H |
| | 4 | 0 | 17·09 | 532·4 | 43·0 | 668·1 | 44·4 | H |
| | 5 | 0 | 16·66 | 530·1 | 44·0 | 653·6 | 45·2 | H |
| | 6 | 0 | 14·77 | 525·7 | 44·8 | 651·0 | 45·5 | B |
| | 7 | 0 | 14·35 | 529·8 | 45·0 | 653·4 | 45·8 | B |
| | 8 | 0 | 10·85 | 532·4 | 45·4 | 648·6 | 46·0 | B |
| | 9 | 0 | 12·92 | 533·1 | 45·4 | 637·6 | 45·9 | B |
| | 10 | 0 | 09·00 | 535·3 | 45·1 | 628·8 | 45·6 | B |
| | 11 | 0 | 13·52 | 527·1 | 45·0 | 623·1 | 45·5 | B |
| | 12 | 0 | 12·33 | 523·0 | 44·9 | 593·7 | 45·4 | H |
| | 13 | 0 | 25 13·52 | 530·4 | 44·8 | 569·1 | 45·0 | D |
| | 14 | 0 | 12·67 | 532·0 | 44·5 | 568·2 | 44·6 | D |
| | 15 | 0 | 11·96 | 533·4 | 44·1 | 577·4 | 44·3 | D |
| | 16 | 0 | 12·60 | 532·5 | 43·8 | 588·5 | 43·8 | D |
| | 17 | 0 | 12·69 | 534·0 | 43·3 | 591·3 | 43·5 | D |
| | 18 | 0 | 13·52 | 533·1 | 42·9 | 599·5 | 43·0 | W |
| | 19 | 0 | 14·33 | 528·6 | 42·6 | 607·0 | 42·6 | W |
| | 20 | 0 | 13·12 | 530·6 | 42·1 | 605·5 | 42·0 | W |
| | 21 | 0 | 13·69 | 527·0 | 41·7 | 607·4 | 41·3 | W |
| | 22 | 0 | 14·41 | 521·5 | 41·3 | 611·0 | 40·9 | B |
| | 23 | 0 | 17·09 | 521·4 | 40·9 | 611·1 | 40·7 | B |
| 24 | 0 | 0 | 19·82 | 525·2 | 40·8 | 609·8 | 40·7 | B |
| | 1 | 0 | 20·40 | 524·2 | 40·9 | 620·0 | 41·4 | H |
| | 2 | 0 | 19·91 | 526·8 | 41·2 | 625·2 | 42·2 | H |
| | 3 | 0 | 19·26 | 528·2 | 41·9 | 633·9 | 43·3 | H |
| | 4 | 0 | 16·30 | 532·9 | 42·8 | 629·6 | 44·2 | H |
| | 5 | 0 | 15·02 | 534·9 | 43·8 | 622·5 | 45·0 | B |
| | 6 | 0 | 13·74 | 534·8 | 44·4 | 619·9 | 45·5 | D |
| | 7 | 0 | 13·88 | 534·8 | 44·8 | 614·3 | 46·0 | D |
| | 8 | 0 | 13·72 | 535·3 | 45·0 | 612·0 | 46·1 | B |
| | 9 | 0 | 13·47 | 534·4 | 45·1 | 611·6 | 46·2 | B |
| | 10 | 0† | 13·30 | 532·2 | 45·1 | 611·1 | 46·1 | W |
| | 11 | 0 | 07·18 | 530·6 | 45·0 | 602·9 | 45·8 | H |
| | 12 | 0 | 07·40 | 530·0 | 44·9 | 595·3 | 45·6 | H |
| | 13 | 0 | 25 09·12 | 525·6 | 44·7 | 577·9 | 45·3 | H |
| | 14 | 0 | 06·71 | 528·4 | 44·6 | 565·6 | 45·2 | H |
| | 15 | 0 | 11·17 | 529·6 | 44·3 | 575·9 | 45·1 | H |
| | 16 | 0 | 13·25 | 531·8 | 44·0 | 581·4 | 44·9 | H |
| | 17 | 0 | 14·06 | 534·1 | 44·0 | 588·1 | 44·6 | H |
| | 18 | 0 | 12·67 | 535·3 | 43·9 | 591·9 | 44·5 | H |
| | 19 | 0 | 15·69 | 532·7 | 43·9 | 601·6 | 44·5 | W |
| | 20 | 0 | 17·06 | 526·9 | 43·8 | 603·8 | 44·3 | W |
| | 21 | 0† | 20·89 | 513·5 | 43·8 | 612·1 | 44·1 | B |
| | 22 | 0 | 25·93 | 513·2 | 43·7 | 610·7 | 44·1 | W |
| | 23 | 0 | 24·32 | 512·0 | 43·8 | 614·4 | 44·5 | W |
| 25 | 0 | 0 | 26·37 | 526·3 | 44·0 | 621·1 | 45·0 | W |
| | 1 | 0 | 22·28 | 529·3 | 44·3 | 627·5 | 45·3 | W |
| | 2 | 0 | 20·05 | 534·5 | 44·7 | 640·2 | 45·5 | W |
| | 3 | 0 | 19·55 | 526·4 | 45·0 | 641·7 | 45·9 | W |
| | 4 | 0 | 19·07 | 526·3 | 45·4 | 641·2 | 46·3 | W |

DECLINATION. Magnet untouched, Oct. 16d—Nov. 11d.

BIFILAR. Observed 2m after the Declination, $k=0{\cdot}000140$. BALANCE. Observed 3m after the Declination, $k=0{\cdot}0000085$.

† Extra Observations made.

Oct. 24d 12h—18h. The observations of the balance are doubtful to the extent of 5 Mic. div.; it is believed, however, that the error (if any) is constant for all these observations.

| Göttingen Mean Time of Declination Obs. | Declination. | Bifilar. Corrected. | Bifilar. Thermometer. | Balance. Corrected. | Balance. Thermometer. | Observer's Initial. |
|---|---|---|---|---|---|---|
| d. h. m. | ° ′ | Sc. Div. | ° | Mic. Div. | ° | |
| 25 5 0 | 25 16·73 | 528·0 | 45·9 | 635·7 | 46·6 | W |
| 6 0 | 14·37 | 536·4 | 46·0 | 629·0 | 46·7 | H |
| 7 0 | 11·88 | 534·8 | 46·1 | 630·8 | 47·0 | H |
| 8 0† | 25 12·29 | 512·8 | 46·3 | 649·6 | 47·0 | H |
| 9 0† | 24 42·42 | 519·7 | 46·5 | 667·0 | 47·2 | H |
| 10 0† | 25 05·92 | 519·5 | 46·7 | 616·2 | 47·4 | H |
| 11 0† | 25 07·67 | 527·7 | 46·8 | 571·3 | 47·5 | B |
| 12 0† | 24 54·65 | 507·7 | 46·8 | 536·1 | 47·5 | B |
| 13 0† | 25 08·86 | 519·0 | 46·9 | 418·3 | 47·6 | B |
| 14 0† | 10·90 | 528·6 | 47·0 | 522·6 | 47·7 | B |
| 15 0† | 06·36 | 533·0 | 47·0 | 544·8 | 47·7 | B |
| 16 0† | 15·74 | 526·9 | 47·0 | 564·3 | 47·6 | B |
| 17 0† | 25·33 | 529·1 | 47·0 | 504·6 | 47·6 | B |
| 18 0† | 12·45 | 544·2 | 47·0 | 545·6 | 47·7 | B |
| 19 0† | 17·13 | 531·5 | 47·0 | 564·1 | 47·6 | H |
| 20 0† | 23·34 | 531·7 | 47·0 | 571·6 | 47·6 | H |
| 21 0† | 20·58 | 517·0 | 47·0 | 576·8 | 47·5 | W |
| 22 0 | 18·99 | 515·6 | 47·1 | 586·2 | 47·5 | H |
| 23 0† | 21·32 | 477·7 | 47·2 | 614·7 | 47·6 | H |
| 26 0 0† | 19·81 | 525·7 | 47·3 | 621·7 | 48·2 | H |
| 1 0 | 20·79 | 528·6 | 47·6 | 614·9 | 48·5 | H |
| 2 0 | 19·68 | 535·2 | 47·8 | 611·9 | 48·7 | H |
| 3 0 | 21·83 | 529·7 | 48·0 | 627·3 | 48·9 | H |
| 4 0 | 20·16 | 526·7 | 48·2 | 647·7 | 49·0 | H |
| 5 0† | 18·14 | 524·4 | 48·3 | 694·5 | 49·0 | H |
| 6 0† | 04·21 | 523·9 | 48·4 | 670·6 | 49·0 | B |
| 7 0† | 15·72 | 532·9 | 48·5 | 630·8 | 49·1 | B |
| 8 0† | 25 15·04 | 534·6 | 48·5 | 624·9 | 49·0 | B |
| 9 0† | 24 51·84 | 531·1 | 48·4 | 581·6 | 48·9 | B |
| 10 0† | 25 04·21 | 517·6 | 48·3 | 588·6 | 48·8 | B |
| 11 0† | 07·27 | 510·4 | 48·3 | 476·0 | 48·9 | W |
| 12 0† | 03·70 | 531·2 | 48·2 | 525·9 | 48·9 | W |
| 27 13 0 | 25 10·75 | 526·2 | 45·9 | 493·3 | 45·7 | H |
| 14 0† | 09·62 | 525·5 | 45·7 | 550·3 | 45·5 | H |
| 15 0 | 13·09 | 525·9 | 45·4 | 570·8 | 45·2 | H |
| 16 0 | 19·08 | 528·1 | 45·0 | 572·0 | 44·7 | H |
| 17 0 | 15·96 | 532·5 | 44·7 | 578·1 | 44·2 | H |
| 18 0 | 15·78 | 536·4 | 44·3 | 579·1 | 43·7 | H |
| 19 0 | 16·23 | 528·9 | 43·9 | 589·1 | 43·4 | W |
| 20 0 | 13·70 | 529·7 | 43·6 | 596·3 | 43·0 | W |
| 21 0 | 13·56 | 529·7 | 43·3 | 605·2 | 42·7 | H |
| 22 0 | 14·70 | 521·9 | 43·0 | 605·3 | 42·5 | W |
| 23 0 | 18·60 | 523·8 | 42·8 | 604·2 | 42·4 | W |
| 28 0 0 | 18·41 | 516·1 | 42·7 | 608·4 | 42·5 | W |
| 1 0 | 20·50 | 529·1 | 42·7 | 615·9 | 42·9 | W |
| 2 0 | 20·45 | 532·9 | 42·8 | 617·2 | 43·3 | W |
| 3 0 | 18·77 | 532·0 | 43·1 | 624·2 | 43·7 | W |
| 4 0 | 17·74 | 535·5 | 43·4 | 625·3 | 44·0 | W |
| 5 0 | 16·35 | 530·8 | 43·8 | 628·7 | 44·3 | W |
| 6 0 | 12·62 | 531·4 | 43·9 | 624·5 | 44·5 | H |
| 7 0 | 12·60 | 534·3 | 44·0 | 621·9 | 44·7 | H |
| 8 0 | 10·58 | 529·2 | 44·3 | 626·0 | 44·9 | H |
| 9 0 | 07·17 | 533·4 | 44·6 | 617·2 | 45·1 | H |
| 10 0 | 07·74 | 528·6 | 44·7 | 608·9 | 45·2 | H |
| 11 0 | 10·70 | 524·6 | 44·8 | 599·7 | 45·2 | B |
| 12 0 | 12·98 | 518·8 | 44·8 | 577·8 | 45·3 | B |

| Göttingen Mean Time of Declination Obs. | Declination. | Bifilar. Corrected. | Bifilar. Thermometer. | Balance. Corrected. | Balance. Thermometer. | Observer's Initial. |
|---|---|---|---|---|---|---|
| d. h. m. | ° ′ | Sc. Div. | ° | Mic. Div. | ° | |
| 28 13 0 | 25 14·15 | 536·9 | 44·9 | 583·3 | 45·4 | B |
| 14 0 | 12·56 | 531·9 | 44·9 | 593·1 | 45·5 | B |
| 15 0 | 14·75 | 532·5 | 45·0 | 598·0 | 45·5 | B |
| 16 0 | 17·58 | 534·9 | 45·0 | 592·9 | 45·5 | B |
| 17 0 | 18·08 | 532·2 | 45·0 | 572·0 | 45·5 | B |
| 18 0 | 13·29 | 538·2 | 45·0 | 583·7 | 45·4 | B |
| 19 0 | 14·70 | 535·9 | 44·9 | 585·2 | 45.2 | H |
| 20 0 | 15·36 | 529·7 | 44·8 | 591·9 | 45·0 | H |
| 21 0 | 14·44 | 529·2 | 44·6 | 589·9 | 44·8 | W |
| 22 0 | 15·64 | 525·4 | 44·3 | 594·1 | 44·5 | H |
| 23 0 | 18·48 | 525·1 | 44·1 | 595·1 | 44·5 | H |
| 29 0 0 | 20·99 | 522·4 | 44·0 | 600·0 | 44·5 | H |
| 1 0 | 19·64 | 522·8 | 44·0 | 604·4 | 44·6 | H |
| 2 0 | 21·39 | 524·7 | 44·2 | 611·2 | 44·9 | H |
| 3 0 | 19·99 | 532·4 | 44·5 | 622·1 | 45·2 | H |
| 4 0 | 15·04 | 530·1 | 44·8 | 636·1 | 45·5 | H |
| 5 0 | 17·09 | 529·7 | 45·0 | 633·5 | 45·7 | H |
| 6 0 | 16·15 | 532·5 | 45·2 | 622·4 | 45·8 | B |
| 7 0 | 15·39 | 532·9 | 45·3 | 618·7 | 45·9 | B |
| 8 0† | 07·76 | 534·5 | 45·4 | 621·2 | 45·9 | B |
| 9 0 | 05·40 | 533·0 | 45·4 | 598·3 | 46·0 | B |
| 10 0 | 09·57 | 530·0 | 45·5 | 602·4 | 46·0 | B |
| 11 0 | 11·84 | 534·5 | 45·5 | 600·4 | 46·0 | W |
| 12 0 | 13·46 | 535·5 | 45·5 | 596·4 | 46·0 | W |
| 13 0 | 25 12·78 | 531·8 | 45·5 | 598·0 | 46·0 | W |
| 14 0 | 13·86 | 532·5 | 45·6 | 599·4 | 46·0 | W |
| 15 0† | 18·60 | 526·4 | 45·6 | 602·3 | 46·1 | W |
| 16 0 | 18·03 | 531·2 | 45·7 | 591·9 | 46·2 | W |
| 17 0 | 15·18 | 535·6 | 45·8 | 595·0 | 46·3 | W |
| 18 0 | 13·17 | 537·2 | 45·8 | 596·6 | 46·4 | W |
| 19 0 | 13·46 | 536·6 | 45·9 | 600·2 | 46·4 | B |
| 20 0 | 13·77 | 538·4 | 45·9 | 599·6 | 46·5 | B |
| 21 0 | 17·09 | 527·7 | 46·0 | 604·3 | 46·5 | H |
| 22 0 | 19·12 | 521·1 | 46·1 | 604·8 | 46·5 | H |
| 23 0 | 19·41 | 522·8 | 46·1 | 606·5 | 46·7 | H |
| 30 0 0 | 21·86 | 529·4 | 46·3 | 608·0 | 46·9 | B |
| 1 0 | 22·47 | 526·3 | 46·4 | 608·6 | 47·0 | H |
| 2 0 | 20·50 | 534·1 | 46·5 | 609·8 | 47·2 | H |
| 3 0 | 20·60 | 536·2 | 46·7 | 612·3 | 47·3 | H |
| 4 0 | 18·41 | 531·7 | 46·8 | 613·9 | 47·4 | H |
| 5 0 | 14·46 | 534·9 | 46·9 | 617·8 | 47·5 | H |
| 6 0 | 15·38 | 539·1 | 47·0 | 617·0 | 47·6 | .W |
| 7 0 | 15·76 | 535·9 | 47·0 | 615·9 | 47·7 | W |
| 8 0 | 14·30 | 536·4 | 47·1 | 613·3 | 47·8 | W |
| 9 0 | 14·10 | 536·4 | 47·2 | 610·0 | 47·7 | W |
| 10 0 | 13·69 | 536·8 | 47·2 | 607·2 | 47·7 | W |
| 11 0 | 13·16 | 533·9 | 47·2 | 607·2 | 47·7 | H |
| 12 0 | 11·05 | 535·8 | 47·2 | 602·9 | 47·7 | H |
| 13 0 | 25 16·92 | 541·5 | 47·2 | 598·6 | 47·7 | H |
| 14 0 | 14·96 | 533·0 | 47·3 | 591·4 | 47·7 | H |
| 15 0 | 13·02 | 535·6 | 47·3 | 581·4 | 47·7 | H |
| 16 0 | 13·25 | 534·1 | 47·3 | 589·3 | 47·7 | H |
| 17 0 | 13·36 | 535·4 | 47·3 | 595·8 | 47·8 | H |
| 18 0 | 13·83 | 536·0 | 47·4 | 597·8 | 47·8 | H |
| 19 0 | 13·66 | 537·8 | 47·4 | 599·4 | 47·9 | W |
| 20 0 | 13·14 | 536·7 | 47·4 | 599·9 | 47·9 | W |

DECLINATION. Magnet untouched, Oct. 16d—Nov. 11d.

BIFILAR. Observed 2m after the Declination, $k$=0·000140. BALANCE. Observed 3m after the Declination, $k$=0·0000085.

† Extra Observations made.

| Göttingen Mean Time of Declination Obs. | | | Declination. | Bifilar. Corrected. | Bifilar. Thermometer. | Balance. Corrected. | Balance. Thermometer. | Observer's Initial. |
|---|---|---|---|---|---|---|---|---|
| d. | h. | m. | ° ′ | Sc. Div. | ° | Mic. Div. | ° | |
| 30 | 21 | 0 | 25 13·47 | 534·7 | 47·4 | 601·2 | 47·8 | B |
| | 22 | 0 | 14·04 | 534·2 | 47·5 | 599·1 | 47·9 | W |
| | 23 | 0 | 15·92 | 531·0 | 47·5 | 594·5 | 47·9 | W |
| 31 | 0 | 0 | 17·67 | 529·7 | 47·6 | 597·6 | 48·0 | W |
| | 1 | 0 | 19·12 | 531·8 | 47·7 | 597·9 | 48·2 | W |
| | 2 | 0 | 19·62 | 537·4 | 47·8 | 597·5 | 48·3 | W |
| | 3 | 0 | 18·52 | 534·8 | 48·0 | 599·7 | 48·4 | W |
| | 4 | 0 | 16·86 | 534·3 | 48·0 | 603·1 | 48·5 | W |
| | 5 | 0 | 16·32 | 536·4 | 48·0 | 602·7 | 48·5 | W |
| | 6 | 0 | 16·48 | 543·9 | 48·0 | 600·6 | 48·5 | H |
| | 7 | 0 | 17·06 | 527·1 | 48·0 | 626·4 | 48·5 | H |
| | 8 | 0 | 13·69 | 536·0 | 48·0 | 616·3 | 48·4 | H |
| | 9 | 0† | 17·67 | 520·7 | 48·0 | 576·8 | 48·4 | H |
| | 10 | 0 | 09·67 | 532·1 | 48·0 | 598·2 | 48·5 | H |
| | 11 | 0 | 12·48 | 531·9 | 48·0 | 601·3 | 48·5 | B |
| | 12 | 0 | 12·69 | 533·1 | 48·0 | 600·7 | 48·5 | B |
| | 13 | 0 | 25 13·19 | 534·2 | 48·0 | 599·1 | 48·5 | B |
| | 14 | 0 | 15·42 | 534·2 | 47·9 | 599·1 | 48·4 | B |
| | 15 | 0 | 13·84 | 533·9 | 47·9 | 598·3 | 48·3 | B |
| | 16 | 0 | 13·79 | 534·4 | 47·9 | 598·9 | 48·2 | B |
| | 17 | 0 | 13·02 | 534·9 | 47·8 | 597·9 | 48·0 | B |
| | 18 | 0 | 13·56 | 533·7 | 47·8 | 599·8 | 48·0 | B |
| | 19 | 0 | 14·24 | 532·6 | 47·7 | 601·3 | 48·0 | H |
| | 20 | 0 | 13·77 | 534·6 | 47·6 | 597·0 | 47·8 | H |
| | 21 | 0 | 13·70 | 534·9 | 47·6 | 598·2 | 47·7 | W |
| | 22 | 0 | 14·28 | 532·9 | 47·5 | 596·6 | 47·6 | H |
| | 23 | 0 | 15·76 | 531·0 | 47·4 | 597·1 | 47·5 | H |
| 1 | 0 | 0 | 17·94 | 533·1 | 47·4 | 595·7 | 47·5 | H |
| | 1 | 0 | 19·71 | 539·5 | 47·4 | 596·8 | 47·7 | H |
| | 2 | 0 | 19·02 | 538·5 | 47·4 | 595·8 | 47·8 | H |
| | 3 | 0 | 19·66 | 543·3 | 47·5 | 598·9 | 48·0 | H |
| | 4 | 0 | 18·03 | 542·5 | 47·7 | 602·7 | 48·0 | H |
| | 5 | 0 | 17·96 | 537·4 | 47·7 | 604·1 | 48·0 | H |
| | 6 | 0 | 14·87 | 547·6 | 47·6 | 605·9 | 47·7 | B |
| | 7 | 0† | 18·28 | 528·6 | 47·4 | 635·8 | 47·5 | B |
| | 8 | 0 | 11·55 | 532·7 | 47·4 | 635·3 | 47·5 | B |
| | 9 | 0 | 14·99 | 538·3 | 47·2 | 619·6 | 47·4 | B |
| | 10 | 0 | 12·75 | 534·8 | 47·0 | 614·2 | 47·1 | B |
| | 11 | 0† | 05·52 | 541·3 | 47·0 | 593·4 | 47·0 | W |
| | 12 | 0 | 09·87 | 528·6 | 46·9 | 593·2 | 46·9 | W |
| | 13 | 0 | 25 13·30 | 536·2 | 46·8 | 596·7 | 46·9 | W |
| | 14 | 0 | 09·46 | 531·0 | 46·7 | 595·5 | 46·8 | W |
| | 15 | 0 | 16·12 | 531·0 | 46·6 | 600·4 | 46·5 | W |
| | 16 | 0 | 11·03 | 531·7 | 46·3 | 593·7 | 46·4 | W |
| | 17 | 0 | 13·57 | 534·9 | 46·1 | 599·1 | 46·2 | W |
| | 18 | 0 | 13·19 | 536·9 | 46·0 | 599·8 | 46·0 | W |
| | 19 | 0 | 13·76 | 533·5 | 45·9 | 602·0 | 45·9 | B |
| | 20 | 0 | 14·82 | 531·2 | 45·8 | 599·5 | 45·7 | B |
| | 21 | 0 | 15·81 | 530·7 | 45·7 | 598·7 | 45·5 | H |
| | 22 | 0 | 16·32 | 520·5 | 45·5 | 601·4 | 45·4 | H |
| | 23 | 0 | 15·85 | 523·6 | 45·3 | 598·0 | 45·3 | B |
| 2 | 0 | 0 | 17·49 | 531·4 | 45·2 | 592·4 | 45·3 | B |
| | 1 | 0 | 20·49 | 533·0 | 45·2 | 598·8 | 45·4 | B |
| | 2 | 0 | 19·89 | 535·6 | 45·2 | 599·7 | 45·5 | B |
| | 3 | 0 | 19·49 | 530·0 | 45·3 | 606·8 | 45·6 | B |
| | 4 | 0 | 18·16 | 536·4 | 45·4 | 607·2 | 45·7 | H |
| 2 | 5 | 0 | 25 18·67 | 540·9 | 45·3 | 612·3 | 45·7 | B |
| | 6 | 0† | 17·89 | 524·2 | 45·3 | 620·6 | 45·7 | W |
| | 7 | 0 | 16·55 | 538·8 | 45·3 | 623·0 | 45·7 | W |
| | 8 | 0 | 15·58 | 537·4 | 45·2 | 624·0 | 45·7 | W |
| | 9 | 0 | 11·75 | 543·3 | 45·2 | 616·1 | 45·5 | W |
| | 10 | 0† | 04·58 | 530·8 | 45·1 | 598·7 | 45·5 | W |
| | 11 | 0† | 15·81 | 537·7 | 45·1 | 572·9 | 45·4 | H |
| | 12 | 0† | 04·04 | 528·2 | 45·1 | 578·3 | 45·4 | H |
| 3 | 13 | 0 | 25 12·80 | 533·1 | 44·0 | 599·3 | 44·0 | B |
| | 14 | 0 | 12·70 | 534·4 | 43·9 | 597·1 | 44·0 | B |
| | 15 | 0 | 13·86 | 531·4 | 43·8 | 596·9 | 44·0 | B |
| | 16 | 0 | 13·44 | 533·5 | 43·8 | 590·3 | 44·0 | B |
| | 17 | 0 | 18·10 | 523·2 | 43·7 | 582·2 | 43·9 | B |
| | 18 | 0 | 16·82 | 532·0 | 43·6 | 578·6 | 43·8 | B |
| | 19 | 0 | 16·25 | 535·1 | 43·6 | 584·8 | 43·8 | H |
| | 20 | 0 | 14·43 | 532·8 | 43·6 | 593·0 | 43·8 | H |
| | 21 | 0 | 14·24 | 534·1 | 43·6 | 598·3 | 43·8 | W |
| | 22 | 0 | 14·26 | 535·4 | 43·6 | 598·8 | 43·9 | H |
| | 23 | 0 | 15·41 | 533·9 | 43·6 | 595·9 | 43·9 | H |
| 4 | 0 | 0 | 17·04 | 533·4 | 43·6 | 596·1 | 43·9 | H |
| | 1 | 0 | 21·98 | 539·9 | 43·6 | 600·4 | 43·9 | H |
| | 2 | 0 | 19·91 | 528·7 | 43·6 | 607·3 | 44·0 | H |
| | 3 | 0 | 21·32 | 543·8 | 43·6 | 613·5 | 44·1 | H |
| | 4 | 0† | 14·21 | 529·9 | 43·7 | 629·5 | 44·2 | H |
| | 5 | 0 | 21·09 | 531·2 | 43·8 | 638·3 | 44·2 | H |
| | 6 | 0 | 17·26 | 537·6 | 43·8 | 621·8 | 44·2 | B |
| | 7 | 0 | 15·81 | 536·3 | 43·8 | 622·5 | 44·1 | B |
| | 8 | 0 | 14·38 | 538·6 | 43·7 | 620·6 | 44·0 | B |
| | 9 | 0† | 04·91 | 528·6 | 43·7 | 623·6 | 44·0 | B |
| | 10 | 0† | 08·86 | 529·2 | 43·6 | 616·0 | 44·0 | B |
| | 11 | 0 | 08·48 | 527·8 | 43·7 | 614·3 | 44·2 | W |
| | 12 | 0 | 11·34 | 530·8 | 43·7 | 611·1 | 44·2 | W |
| | 13 | 0† | 25 09·60 | 537·4 | 43·7 | 582·7 | 44·2 | W |
| | 14 | 0 | 12·48 | 535·9 | 43·8 | 589·1 | 44·3 | W |
| | 15 | 0 | 12·93 | 532·1 | 43·8 | 595·0 | 44·4 | W |
| | 16 | 0 | 14·46 | 535·1 | 43·9 | 596·8 | 44·4 | W |
| | 17 | 0 | 13·37 | 534·6 | 43·9 | 599·9 | 44·4 | W |
| | 18 | 0 | 12·82 | 534·2 | 43·9 | 601·8 | 44·4 | W |
| | 19 | 0 | 13·09 | 534·5 | 43·9 | 602·4 | 44·5 | B |
| | 20 | 0 | 13·46 | 535·7 | 43·9 | 602·4 | 44·5 | B |
| | 21 | 0 | 13·46 | 535·4 | 44·0 | 602·6 | 44·5 | H |
| | 22 | 0 | 13·83 | 531·6 | 44·0 | 605·4 | 44·5 | B |
| | 23 | 0 | 15·17 | 528·2 | 44·0 | 604·9 | 44·6 | B |
| 5 | 0 | 0 | 16·30 | 530·2 | 44·1 | 608·2 | 44·7 | B |
| | 1 | 0 | 16·35 | 528·9 | 44·1 | 610·8 | 44·7 | B |
| | 2 | 0 | 15·86 | 532·8 | 44·2 | 611·0 | 44·7 | H |
| | 3 | 0 | 15·58 | 534·0 | 44·2 | 619·4 | 44·8 | H |
| | 4 | 0 | 15·07 | 535·0 | 44·3 | 616·5 | 44·8 | H |
| | 5 | 0 | 14·60 | 536·9 | 44·3 | 609·7 | 44·8 | B |
| | 6 | 0 | 14·11 | 536·9 | 44·3 | 607·8 | 44·7 | W |
| | 7 | 0 | 13·90 | 538·5 | 44·2 | 606·3 | 44·6 | W |
| | 8 | 0 | 12·22 | 534·0 | 44·1 | 607·3 | 44·5 | W |
| | 9 | 0 | 13·83 | 536·0 | 44·0 | 610·3 | 44·5 | W |
| | 10 | 0 | 11·21 | 532·9 | 44·0 | 612·1 | 44·4 | W |
| | 11 | 2 | 13·05 | 532·1 | 44·0 | 612·6 | 44·3 | H |
| | 12 | 0 | 13·77 | 531·1 | 43·9 | 615·3 | 44·2 | H |

DECLINATION. Magnet untouched, Oct. 16d—Nov. 11d.

BIFILAR. Observed 2m after the Declination, $k$=0·000140. BALANCE. Observed 3m after the Declination, $k$=0·0000985.

† Extra Observations made.

Nov. 4d 23h + The large copper stove removed from the Observatory; its effect on the balance magnet, to which it was nearest, was found to be zero.

Nov. 4d—6d. Observatory being cleaned and washed; iron in the room frequently, but always removed during the observations.

| Göttingen Mean Time of Declination Obs. | Declination. | Bifilar. Corrected. | Bifilar. Thermometer. | Balance. Corrected. | Balance. Thermometer. | Observer's Initial. |
|---|---|---|---|---|---|---|
| d. h. m. | ° ′ | Sc. Div. | ° | Mic. Div. | ° | |
| 5 13 0 | 25 13·07 | 534·0 | 43·8 | 613·8 | 44·1 | H |
| 14 0 | 12·38 | 530·1 | 43·8 | 611·1 | 44·0 | H |
| 15 0 | 15·17 | 542·4 | 43·7 | 598·7 | 44·0 | H |
| 16 0 | 13·25 | 534·6 | 43·7 | 597·0 | 44·0 | H |
| 17 0 | 13·67 | 538·7 | 43·7 | 599·1 | 44·0 | H |
| 18 0 | 12·72 | 537·9 | 43·7 | 600·2 | 44·0 | H |
| 19 0 | 13·34 | 537·8 | 43·7 | 602·3 | 44·0 | W |
| 20 0 | 13·39 | 540·4 | 43·6 | 602·9 | 44·0 | W |
| 21 0 | 13·79 | 539·9 | 43·6 | 603·0 | 43·9 | B |
| 22 0 | 14·40 | 534·6 | 43·6 | 604·1 | 43·9 | W |
| 23 0 | 17·39 | 534·5 | 43·7 | 602·9 | 44·0 | W |
| 6 0 0 | 17·83 | 526·1 | 43·7 | 593·9 | 44·4 | W |
| 1 0 | 18·52 | 533·8 | 44·0 | 594·3 | 44·7 | W |
| 2 0 | 18·43 | 535·6 | 44·1 | 595·9 | 44·7 | W |
| 3 0 | 17·68 | 535·6 | 44·3 | 599·7 | 45·0 | W |
| 4 0 | 15·92 | 540·4 | 44·6 | 607·7 | 45·2 | W |
| 5 0 | 16·36 | 535·1 | 44·6 | 626·3 | 45·2 | W |
| 6 0 | 14·43 | 533·5 | 44·8 | 634·1 | 45·4 | H |
| 7 0 | 14·67 | 530·6 | 44·8 | 656·9 | 45·5 | H |
| 8 0 | 13·93 | 535·7 | 44·8 | 646·9 | 45·4 | H |
| 9 0 | 14·82 | 535·1 | 44·7 | 638·8 | 45·3 | H |
| 10 0 | 13·27 | 535·3 | 44·7 | 633·9 | 45·3 | H |
| 11 0 | 13·05 | 536·6 | 44·7 | 630·7 | 45·2 | B |
| 12 0 | 13·83 | 535·9 | 44·7 | 628·1 | 45·2 | B |
| 13 0 | 25 14·13 | 535·7 | 46·7 | 626·5 | 45·2 | B |
| 14 0 | 14·06 | 535·7 | 44·7 | 624·3 | 45·2 | B |
| 15 0 | 14·20 | 537·6 | 44·7 | 620·2 | 45·1 | B |
| 16 0 | 13·49 | 536·0 | 44·7 | 619·1 | 45·0 | B |
| 17 0 | 13·69 | 537·7 | 44·6 | 618·0 | 45·0 | B |
| 18 0 | 13·70 | 536·6 | 44·6 | 618·3 | 44·9 | B |
| 19 0 | 12·75 | 537·2 | 44·5 | 616·6 | 44·7 | H |
| 20 0 | 12·93 | 537·7 | 44·4 | 619·7 | 44·6 | H |
| 21 0 | 12·78 | 532·9 | 44·1 | 623·2 | 44·4 | W |
| 22 0 | 14·67 | 528·3 | 44·0 | 622·4 | 44·2 | H |
| 23 0 | 16·52 | 528·9 | 43·9 | 621·1 | 44·2 | H |
| 7 0 0 | 18·77 | 530·5 | 44·0 | 625·7 | 44·5 | H |
| 1 0 | 19·37 | 532·3 | 44·1 | 624·9 | 44·7 | H |
| 2 0 | 18·13 | 532·9 | 44·2 | 628·3 | 44·9 | W |
| 3 0 | 16·28 | 535·9 | 44·4 | 628·7 | 45·1 | H |
| 4 0 | 14·78 | 536·2 | 44·7 | 627·8 | 45·3 | H |
| 5 0 | 14·43 | 537·7 | 44·8 | 624·9 | 45·5 | H |
| 6 0 | 14·31 | 537·8 | 44·9 | 623·0 | 45·3 | B |
| 7 0 | 13·66 | 536·4 | 44·9 | 623·4 | 45·3 | B |
| 8 0 | 11·15 | 533·3 | 44·9 | 631·6 | 45·2 | B |
| 9 0 | 12·25 | 533·7 | 44·8 | 629·9 | 45·1 | B |
| 10 0 | 11·72 | 539·1 | 44·7 | 629·4 | 44·9 | B |
| 11 0 | 12·87 | 536·0 | 44·4 | 623·2 | 44·5 | W |
| 12 0 | 14·18 | 534·3 | 44·1 | 621·7 | 44·2 | W |
| 13 0 | 25 15·04 | 535·2 | 43·9 | 622·3 | 43·9 | W |
| 14 0 | 14·24 | 534·8 | 43·7 | 622·4 | 43·6 | W |
| 15 0 | 14·64 | 535·2 | 43·4 | 623·1 | 43·4 | W |
| 16 0 | 14·41 | 536·0 | 43·1 | 621·2 | 43·1 | W |
| 17 0 | 14·31 | 536·5 | 42·9 | 621·0 | 42·9 | W |
| 18 0 | 13·56 | 537·1 | 42·8 | 619·8 | 42·7 | W |
| 19 0 | 13·47 | 535·2 | 42·6 | 620·5 | 42·5 | B |
| 20 0 | 13·05 | 535·4 | 42·4 | 615·4 | 42·5 | B |

| Göttingen Mean Time of Declination Obs. | Declination. | Bifilar. Corrected. | Bifilar. Thermometer. | Balance. Corrected. | Balance. Thermometer. | Observer's Initial. |
|---|---|---|---|---|---|---|
| d. h. m. | ° ′ | Sc. Div. | ° | Mic. Div. | ° | |
| 7 21 0 | 25 12·76 | 533·4 | 42·3 | 614·4 | 42·5 | H |
| 22 0 | 13·36 | 529·4 | 42·2 | 614·9 | 42·5 | H |
| 23 0 | 15·91 | 527·7 | 42·2 | 614·3 | 42·5 | B |
| 8 0 0 | 16·95 | 527·1 | 42·2 | 612·9 | 42·7 | H |
| 1 0 | 18·58 | 533·3 | 42·5 | 611·5 | 43·1 | B |
| 2 0 | 18·28 | 532·9 | 42·8 | 617·1 | 43·5 | B |
| 3 0 | 16·62 | 532·7 | 43·1 | 620·4 | 43·9 | B |
| 4 0 | 14·30 | 536·5 | 43·5 | 617·1 | 44·2 | B |
| 5 10 | 14·17 | 537·9 | 43·8 | 615·3 | 44·6 | H |
| 6 0 | 11·84 | 539·0 | 44·0 | 614·7 | 44·8 | W |
| 7 0 | 12·56 | 540·3 | 44·1 | 611·0 | 45·0 | W |
| 8 0 | 12·48 | 541·3 | 44·3 | 606·0 | 45·2 | W |
| 9 0 | 10·80 | 542·3 | 44·6 | 601·8 | 45·3 | W |
| 10 0 | 10·00 | 539·6 | 44·7 | 599·2 | 45·4 | W |
| 11 0 | 11·05 | 536·7 | 44·8 | 598·0 | 45·5 | H |
| 12 0 | 11·54 | 537·4 | 44·8 | 597·0 | 45·5 | H |
| 13 0 | 25 10·98 | 536·8 | 45·0 | 593·6 | 45·6 | H |
| 14 0 | 13·32 | 534·2 | 45·0 | 594·1 | 45·6 | H |
| 15 0 | 14·06 | 535·9 | 45·0 | 594·3 | 45·7 | H |
| 16 0 | 12·98 | 536·5 | 45·2 | 595·2 | 45·9 | H |
| 17 0 | 12·92 | 537·2 | 45·2 | 596·4 | 46·0 | H |
| 18 0 | 12·35 | 539·2 | 45·3 | 595·8 | 46·0 | H |
| 19 0 | 12·76 | 538·5 | 45·2 | 596·2 | 45·9 | W |
| 20 0 | 12·42 | 537·9 | 45·2 | 596·0 | 45·9 | W |
| 21 0 | 12·22 | 534·6 | 45·4 | 600·3 | 45·9 | B |
| 22 0 | 12·56 | 530·0 | 45·5 | 614·7 | 46·1 | W |
| 23 0 | 14·60 | 527·3 | 45·7 | 617·4 | 46·3 | W |
| 9 0 0 | 16·59 | 529·7 | 45·9 | 616·8 | 46·6 | W |
| 1 0 | 17·81 | 531·3 | 46·1 | 614·6 | 46·8 | W |
| 2 2 | 17·86 | 534·9 | 46·5 | 614·8 | 47·2 | W |
| 3 0 | 16·87 | 536·9 | 46·9 | 617·3 | 47·7 | W |
| 4 0 | 15·34 | 537·8 | 47·2 | 619·3 | 48·0 | W |
| 5 0 | 14·13 | 539·8 | 47·6 | 619·6 | 48·4 | W |
| 6 0 | 13·10 | 540·5 | 47·7 | 616·0 | 48·4 | H |
| 7 0 | 13·17 | 540·4 | 47·8 | 615·0 | 48·4 | H |
| 8 0 | 13·16 | 540·4 | 47·7 | 614·7 | 48·4 | H |
| 9 0 | 13·09 | 540·6 | 47·7 | 613·5 | 48·2 | H |
| 10 0 | 12·82 | 540·0 | 47·6 | 613·5 | 48·1 | H |
| 11 0 | 11·95 | 539·8 | 47·5 | 615·5 | 47·8 | B |
| 12 0 | 12·72 | 536·6 | 47·3 | 608·9 | 47·6 | B |
| 10 13 0 | 25 11·30 | 539·9 | 44·9 | 587·1 | 45·1 | W |
| 14 0 | 10·74 | 538·1 | 44·9 | 585·6 | 45·0 | W |
| 15 0 | 11·72 | 538·6 | 44·8 | 586·8 | 44·9 | W |
| 16 0 | 13·99 | 539·2 | 44·7 | 583·0 | 44·8 | W |
| 17 0 | 10·87 | 543·2 | 44·6 | 579·7 | 44·7 | W |
| 18 0 | 11·34 | 542·6 | 44·3 | 582·2 | 44·5 | W |
| 19 0 | 11·69 | 544·6 | 44·2 | 583·9 | 44·3 | B |
| 20 0 | 14·37 | 540·8 | 44·1 | 584·7 | 44·2 | B |
| 21 0 | 16·12 | 538·8 | 44·0 | 582·7 | 44·0 | H |
| 22 0 | 17·53 | 536·0 | 43·8 | 584·6 | 43·7 | H |
| 23 0 | 18·16 | 535·4 | 43·7 | 586·8 | 43·7 | H |
| 11 0 0 | 21·77 | 528·2 | 43·5 | 606·9 | 43·7 | H |
| 1 0 | 21·90 | 528·1 | 43·4 | 610·8 | 43·7 | H |
| 2 0 | 22·24 | 542·0 | 43·4 | 618·2 | 43·7 | H |
| 3 0 | 19·53 | 532·3 | 43·3 | 618·7 | 43·7 | H |
| 4 0 | 17·74 | 541·4 | 43·4 | 626·3 | 43·7 | B |

DECLINATION. Magnet untouched, Oct. 16d—Nov. 11d.

BIFILAR. Observed 2m after the Declination, $k = 0{\cdot}000140$. BALANCE. Observed 3m after the Declination, $k = 0{\cdot}0000085$.

Nov. 8d 20h—23h. Workmen engaged laying carpets; it is feared that some one must have brought a hammer near the balance magnet between 21h 0m and 30m, as the reading had changed about 13 mic. div.; the time of vibration had also changed since the previous day.

| Göttingen Mean Time of Declination Obs. | Declination. | Bifilar. Corrected. | Bifilar. Thermometer. | Balance. Corrected. | Balance. Thermometer. | Observer's Initial. |
|---|---|---|---|---|---|---|
| d. h. m. | ° ′ | Sc. Div. | ° | Mic. Div. | ° | |
| 11 5 0† | 25 21·54 | 522·2 | 43·4 | 663·1 | 43·7 | B |
| 6 0† | 13·93 | 532·5 | 43·3 | 699·9 | 43·7 | W |
| 7 0† | 18·54 | 528·4 | 43·2 | 683·0 | 43·6 | W |
| 8 0† | 13·29 | 523·2 | 43·1 | 636·5 | 43·5 | W |
| 9 0† | 06·50 | 531·1 | 43·0 | 663·1 | 43·3 | W |
| 10 0 | 05·22 | 524·8 | 42·8 | 654·4 | 42·9 | W |
| 11 0 | 06·26 | 522·6 | 42·6 | 651·2 | 42·5 | H |
| 12 0 | 07·69 | 531·6 | 42·2 | 627·3 | 42·1 | H |
| 13 0† | 25 02·43 | 534·0 | 41·9 | 557·8 | 41·7 | H |
| 14 0 | 03·65 | 525·1 | 41·7 | 562·6 | 41·5 | H |
| 15 0 | 13·05 | 524·9 | 41·5 | 597·3 | 41·4 | H |
| 16 0 | 13·81 | 531·6 | 41·3 | 606·9 | 41·3 | H |
| 17 0 | 12·85 | 531·0 | 41·0 | 612·9 | 41·2 | H |
| 18 0 | 14·99 | 529·1 | 41·0 | 614·6 | 41·2 | H |
| 19 0 | 15·54 | 534·4 | 40·9 | 614·8 | 41·1 | W |
| 20 0 | 14·73 | 533·5 | 40·9 | 614·9 | 41·0 | W |
| 21 0 | 15·04 | 533·1 | 40·9 | 613·5 | 41·0 | B |
| 22 0 | 15·47 | 529·6 | 40·8 | 613·5 | 41·0 | W |
| 23 0 | 16·82 | 530·2 | 40·8 | 613·1 | 41·0 | W |
| 12 0 0 | 16·68 | 533·7 | 40·9 | 618·2 | 41·2 | W |
| 1 0 | 17·80 | 535·4 | 41·0 | 622·9 | 41·5 | W |
| 2 0 | 16·01 | 532·1 | 41·2 | 626·7 | 41·8 | W |
| 3 0 | 16·76 | 536·0 | 41·5 | 628·3 | 42·0 | W |
| 4 0 | 21·03 | 528·0 | 41·7 | 647·4 | 42·2 | W |
| 5 0† | 08·22 | 521·1 | 41·8 | 718·2 | 42·5 | W |
| 6 0† | 18·14 | 535·8 | 41·9 | 670·1 | 42·7 | H |
| 7 0 | 15·52 | 538·5 | 42·0 | 642·4 | 42·7 | H |
| 8 0 | 15·59 | 532·4 | 42·0 | 640·4 | 42·7 | H |
| 9 0 | 14·70 | 533·0 | 42·0 | 638·1 | 42·6 | H |
| 10 0 | 13·93 | 532·3 | 42·0 | 632·3 | 42·5 | H |
| 11 0 | 12·06 | 534·3 | 41·9 | 628·1 | 42·4 | B |
| 12 0 | 09·26 | 530·4 | 41·8 | 624·2 | 42·2 | B |
| 13 0† | 25 12·13 | 535·8 | 41·7 | 606·0 | 42·2 | B |
| 14 0 | 13·77 | 530·7 | 41·7 | 616·1 | 42·2 | B |
| 15 0 | 13·00 | 534·0 | 41·7 | 617·3 | 42·3 | B |
| 16 0 | 15·59 | 534·9 | 41·8 | 618·4 | 42·3 | B |
| 17 0 | 16·06 | 537·2 | 41·8 | 615·5 | 42·4 | B |
| 18 0 | 13·72 | 534·2 | 41·9 | 614·1 | 42·5 | B |
| 19 0 | 15·01 | 538·3 | 41·9 | 615·7 | 42·6 | H |
| 20 0 | 16·57 | 535·6 | 42·0 | 614·2 | 42·6 | H |
| 21 0 | 16·75 | 534·9 | 42·0 | 612·7 | 42·6 | W |
| 22 0 | 15·05 | 528·5 | 42·0 | 619·1 | 42·6 | H |
| 23 0 | 15·94 | 531·0 | 42·1 | 619·7 | 42·6 | H |
| 13 0 0 | 16·87 | 533·0 | 42·1 | 617·9 | 42·6 | H |
| 1 0 | 19·51 | 535·4 | 42·1 | 622·6 | 42·6 | H |
| 2 0 | 18·01 | 528·7 | 42·1 | 628·5 | 42·7 | H |
| 3 0 | 17·46 | 533·9 | 42·2 | 628·8 | 42·9 | H |
| 4 0 | 16·15 | 533·9 | 42·3 | 629·6 | 43·1 | H |
| 5 0 | 15·72 | 535·2 | 42·4 | 627·9 | 43·2 | H |
| 6 0 | 14·57 | 538·0 | 42·4 | 623·7 | 43·0 | B |
| 7 0 | 14·85 | 532·3 | 42·5 | 625·5 | 43·0 | B |
| 8 0 | 08·75 | 532·4 | 42·6 | 622·8 | 43·1 | B |
| 9 0 | 12·43 | 535·5 | 42·7 | 621·9 | 43·3 | B |
| 10 0 | 10·47 | 532·2 | 42·8 | 621·7 | 43·5 | B |
| 11 0 | 11·51 | 530·6 | 43·0 | 610·6 | 43·7 | W |
| 12 0 | 10·77 | 527·3 | 43·1 | 596·4 | 43·9 | W |

| Göttingen Mean Time of Declination Obs. | Declination. | Bifilar. Corrected. | Bifilar. Thermometer. | Balance. Corrected. | Balance. Thermometer. | Observer's Initial. |
|---|---|---|---|---|---|---|
| d. h. m. | ° ′ | Sc. Div. | ° | Mic. Div. | ° | |
| 13 13 0 | 25 08·18 | 526·7 | 43·2 | 573·4 | 44·0 | W |
| 14 0 | 11·99 | 528·8 | 43·3 | 586·8 | 44·1 | W |
| 15 0 | 13·05 | 528·3 | 43·5 | 603·9 | 44·2 | W |
| 16 0 | 10·78 | 532·7 | 43·6 | 604·6 | 44·3 | W |
| 17 0 | 12·95 | 535·7 | 43·7 | 605·9 | 44·3 | W |
| 18 0 | 14·44 | 540·1 | 43·7 | 604·2 | 44·3 | W |
| 19 0 | 14·48 | 541·7 | 43·7 | 603·1 | 44·1 | B |
| 20 0 | 17·84 | 531·8 | 43·6 | 606·9 | 44·0 | B |
| 21 0 | 15·44 | 540·6 | 43·6 | 607·7 | 44·0 | H |
| 22 0 | 15·27 | 538·6 | 43·4 | 605·7 | 43·8 | H |
| 23 0 | 15·17 | 536·1 | 43·3 | 606·1 | 43·7 | B |
| 14 0 0 | 17·13 | 536·6 | 43·3 | 608·9 | 43·8 | B |
| 1 0 | 20·35 | 539·0 | 43·3 | 611·6 | 43·9 | H |
| 2 0 | 18·50 | 537·3 | 43·4 | 616·9 | 44·1 | H |
| 3 0 | 16·63 | 535·7 | 43·6 | 620·3 | 44·3 | H |
| 4 0 | 15·41 | 533·9 | 43·8 | 619·9 | 44·5 | H |
| 5 0 | 14·53 | 536·0 | 43·9 | 622·7 | 44·5 | B |
| 6 0 | 15·07 | 538·7 | 44·0 | 624·6 | 44·5 | W |
| 7 0 | 14·17 | 531·2 | 44·0 | 631·5 | 44·6 | W |
| 8 0 | 14·46 | 536·3 | 44·0 | 624·3 | 44·5 | W |
| 9 0 | 14·10 | 537·4 | 44·0 | 619·5 | 44·5 | W |
| 10 0 | 13·91 | 537·3 | 43·9 | 615·2 | 44·3 | W |
| 11 0 | 13·49 | 536·0 | 43·7 | 614·6 | 44·0 | H |
| 12 0 | 13·67 | 535·4 | 43·5 | 615·4 | 43·7 | H |
| 13 0 | 25 13·86 | 535·5 | 43·2 | 616·0 | 43·5 | H |
| 14 0 | 14·01 | 536·0 | 43·0 | 615·6 | 43·2 | H |
| 15 0 | 14·13 | 535·9 | 42·9 | 617·5 | 43·1 | H |
| 16 0 | 14·37 | 536·2 | 42·8 | 616·0 | 43·0 | H |
| 17 0 | 14·70 | 537·2 | 42·8 | 616·6 | 43·0 | H |
| 18 0 | 15·01 | 539·1 | 42·8 | 614·2 | 43·2 | H |
| 19 0 | 13·76 | 543·4 | 42·8 | 610·0 | 43·4 | W |
| 20 0 | 13·43 | 540·9 | 42·9 | 609·5 | 43·6 | W |
| 21 0 | 13·97 | 538·1 | 43·2 | 612·9 | 44·0 | B |
| 22 0 | 13·96 | 533·9 | 43·7 | 617·0 | 44·6 | W |
| 23 0 | 15·51 | 531·3 | 44·2 | 615·2 | 45·3 | W |
| 15 0 0 | 16·32 | 532·4 | 45·0 | 616·0 | 46·0 | W |
| 1 0 | 17·73 | 535·9 | 45·6 | 612·0 | 46·5 | W |
| 2 0 | 17·89 | 537·2 | 46·0 | 611·8 | 47·0 | W |
| 3 0 | 16·55 | 536·1 | 46·6 | 620·3 | 47·5 | W |
| 4 0 | 15·76 | 535·9 | 47·0 | 627·5 | 47·9 | W |
| 5 0 | 15·91 | 539·4 | 47·3 | 621·8 | 48·1 | W |
| 6 0 | 15·99 | 540·5 | 47·6 | 619·8 | 48·3 | H |
| 7 0 | 15·22 | 541·1 | 47·7 | 619·0 | 48·3 | H |
| 8 0 | 14·65 | 538·2 | 47·7 | 620·3 | 48·4 | H |
| 9 0 | 14·38 | 538·0 | 47·8 | 625·4 | 48·5 | H |
| 10 0 | 13·09 | 537·8 | 47·9 | 625·5 | 48·5 | H |
| 11 0 | 13·16 | 537·8 | 47·9 | 621·6 | 48·5 | B |
| 12 0 | 11·86 | 540·3 | 47·9 | 612·3 | 48·5 | B |
| 13 0 | 25 11·77 | 539·0 | 47·9 | 607·0 | 48·5 | B |
| 14 0 | 10·50 | 537·4 | 47·9 | 603·7 | 48·5 | B |
| 15 0† | 08·45 | 533·0 | 48·0 | 601·7 | 48·5 | B |
| 16 0 | 14·48 | 541·3 | 48·0 | 602·2 | 48·5 | B |
| 17 0 | 14·11 | 541·1 | 48·0 | 601·9 | 48·5 | B |
| 18 0 | 13·50 | 545·9 | 48·1 | 599·2 | 48·6 | B |
| 19 0 | 11·39 | 546·6 | 48·2 | 595·7 | 48·7 | H |
| 20 0 | 15·05 | 542·0 | 48·3 | 596·5 | 48·9 | H |

DECLINATION. Torsion removed, Nov. 11d 23h, + 8½°. Effect of + 10° of Torsion = − 0′·84.
BIFILAR. Observed 2m after the Declination, $k$=0·000140. BALANCE. Observed 3m after the Declination, $k$=0·0000085.

† Extra Observations made.

| Göttingen Mean Time of Declination Obs. | Declination. | Bifilar. | | Balance. | | Observer's Initial. |
|---|---|---|---|---|---|---|
| | | Corrected. | Thermometer. | Corrected. | Thermometer. | |
| d. h. m. | ° ′ | Sc. Div. | ° | Mic. Div. | ° | |
| 15 21 2† | 25 21·46 | 519·6 | 48·4 | 613·3 | 49·0 | W |
| 22 0† | 29·41 | 540·5 | 48·5 | 578·2 | 49·1 | H |
| 23 0† | 21·43 | 521·8 | 48·7 | 596·8 | 49·2 | W |
| 16 0 0† | 30·60 | 523·6 | 48·8 | 619·3 | 49·4 | H |
| 1 0† | 37·50 | 548·0 | 49·1 | 798·1 | 49·7 | H |
| 2 0† | 28·47 | 521·4 | 49·5 | 780·3 | 50·2 | H |
| 3 0† | 22·94 | 535·4 | 49·8 | 760·6 | 50·5 | H |
| 4 0† | 22·10 | 543·3 | 50·2 | 971·2 | 50·7 | B |
| 5 0† | 08·28 | 533·2 | 50·3 | 1059·1 | 51·2 | H |
| 6 0† | 25 14·57 | 590·6 | 50·6 | 1112·4 | 51·7 | B |
| 7 0† | 24 33·70 | 518·1 | 50·8 | 697·5 | 52·0 | B |
| 8 0† | 24 59·03 | 531·9 | 51·0 | 774·2 | 52·1 | B |
| 9 0† | 24 40·91 | 535·1 | 51·2 | 599·4 | 52·3 | B |
| 10 0† | 25 00·53 | 510·3 | 51·3 | 505·6 | 52·3 | B |
| 11 0† | 02·69 | 490·6 | 51·3 | 496·4 | 52·3 | B |
| 12 0† | 11·28 | 502·1 | 51·3 | 456·4 | 52·5 | B |
| 17 13 0 | 25 10·68 | 528·6 | 51·1 | 581·4 | 50·8 | H |
| 14 0 | 16·21 | 529·9 | 50·9 | 599·5 | 50·7 | H |
| 15 0 | 15·71 | 528·8 | 50·7 | 611·9 | 50·7 | H |
| 16 0 | 13·56 | 529·8 | 50·6 | 623·3 | 50·5 | H |
| 17 0 | 12·72 | 531·6 | 50·5 | 621·4 | 50·4 | H |
| 18 0 | 16·08 | 533·4 | 50·3 | 621·3 | 50·3 | H |
| 19 3 | 16·21 | 523·1 | 50·2 | 632·2 | 50·2 | W |
| 20 0 | 15·76 | 531·1 | 50·1 | 632·7 | 50·2 | W |
| 21 0 | 15·01 | 530·8 | 50·1 | 635·4 | 50·2 | B |
| 22 0 | 16·48 | 528·8 | 50·1 | 635·7 | 50·2 | W |
| 23 0 | 19·58 | 521·2 | 50·1 | 643·6 | 50·4 | W |
| 18 0 0† | 17·76 | 516·0 | 50·2 | 655·7 | 50·5 | W |
| 1 0 | 19·44 | 534·5 | 50·3 | 648·7 | 50·5 | W |
| 2 0 | 19·28 | 536·1 | 50·5 | 646·2 | 50·6 | W |
| 3 0 | 16·80 | 536·5 | 50·6 | 644·3 | 50·7 | W |
| 4 0 | 15·58 | 532·3 | 50·6 | 643·6 | 50·7 | W |
| 5 0 | 16·62 | 534·2 | 50·6 | 647·0 | 50·8 | W |
| 6 0 | 15·24 | 534·0 | 50·6 | 641·6 | 50·7 | H |
| 7 0 | 16·18 | 532·3 | 50·5 | 648·6 | 50·6 | H |
| 8 0† | 25 06·39 | 545·7 | 50·4 | 631·7 | 50·6 | H |
| 9 0† | 24 59·46 | 531·9 | 50·4 | 623·6 | 50·7 | H |
| 10 0† | 25 02·53 | 536·5 | 50·5 | 593·9 | 50·9 | H |
| 11 0† | 09·12 | 521·3 | 50·7 | 600·6 | 51·1 | B |
| 12 0 | 12·78 | 530·4 | 50·7 | 607·5 | 51·2 | B |
| 13 0 | 25 13·10 | 528·1 | 50·8 | 609·9 | 51·1 | B |
| 14 0 | 15·07 | 529·7 | 50·8 | 606·5 | 51·0 | B |
| 15 0† | 15·83 | 525·3 | 50·8 | 613·1 | 51·0 | B |
| 16 0† | 19·15 | 528·8 | 50·9 | 565·7 | 51·1 | B |
| 17 0 | 15·07 | 526·6 | 50·9 | 570·8 | 51·2 | B |
| 18 0 | 11·00 | 529·4 | 50·9 | 592·5 | 51·2 | B |
| 19 0 | 14·73 | 528·6 | 50·9 | 607·1 | 51·2 | H |
| 20 0 | 16·86 | 535·8 | 51·0 | 614·0 | 51·2 | H |
| 21 0 | 17·84 | 532·8 | 51·0 | 618·3 | 51·2 | W |
| 22 0 | 15·38 | 522·1 | 51·0 | 627·8 | 51·2 | H |
| 23 0 | 18·63 | 521·2 | 51·1 | 632·0 | 51·2 | H |
| 19 0 0 | 20·05 | 514·5 | 51·1 | 649·2 | 51·3 | H |
| 1 0 | 19·01 | 517·6 | 51·1 | 648·7 | 51·4 | H |
| 2 0 | 18·48 | 522·7 | 51·3 | 657·3 | 51·6 | H |
| 3 0 | 17·00 | 531·4 | 51·5 | 673·1 | 51·9 | H |
| 4 0 | 12·29 | 525·2 | 51·7 | 687·6 | 52·1 | H |
| 19 5 0 | 25 14·53 | 531·4 | 51·8 | 668·0 | 52·1 | H |
| 6 0 | 13·46 | 532·0 | 51·8 | 650·9 | 52·0 | B |
| 7 0† | 05·72 | 543·1 | 51·8 | 645·0 | 52·0 | B |
| 8 0 | 11·77 | 532·0 | 51·8 | 641·9 | 52·0 | B |
| 9 0 | 11·96 | 531·7 | 51·7 | 643·8 | 51·8 | B |
| 10 0 | 13·05 | 530·0 | 51·5 | 626·4 | 51·5 | B |
| 11 0 | 09·86 | 530·6 | 51·3 | 621·0 | 51·4 | W |
| 12 0 | 13·88 | 530·0 | 51·1 | 621·3 | 51·3 | W |
| 13 0 | 25 14·43 | 532·5 | 51·0 | 616·0 | 51·1 | W |
| 14 0 | 14·96 | 533·2 | 50·9 | 618·1 | 51·0 | W |
| 15 0 | 15·27 | 533·4 | 50·9 | 617·5 | 51·0 | W |
| 16 0 | 15·74 | 533·7 | 50·9 | 617·8 | 51·0 | W |
| 17 0 | 14·60 | 536·7 | 50·9 | 618·2 | 50·9 | W |
| 18 0 | 13·69 | 538·8 | 50·9 | 616·9 | 50·9 | W |
| 19 2 | 13·57 | 534·7 | 50·8 | 620·2 | 50·8 | B |
| 20 0 | 14·23 | 534·3 | 50·8 | 621·1 | 50·9 | B |
| 21 0 | 14·51 | 532·8 | 50·8 | 621·0 | 50·9 | H |
| 22 0 | 15·49 | 530·7 | 50·8 | 621·3 | 50·9 | H |
| 23 0 | 17·80 | 527·2 | 50·9 | 624·0 | 51·1 | B |
| 20 0 3 | 18·37 | 525·5 | 51·0 | 631·4 | 51·4 | H |
| 1 0 | 18·48 | 528·6 | 51·2 | 630·9 | 51·7 | H |
| 2 0 | 17·15 | 531·9 | 51·5 | 634·9 | 52·1 | H |
| 3 0 | 17·15 | 535·0 | 51·8 | 632·9 | 52·3 | H |
| 4 0 | 15·74 | 533·0 | 51·9 | 631·9 | 52·4 | H |
| 5 0 | 14·53 | 535·3 | 51·9 | 630·5 | 52·1 | H |
| 6 0 | 11·88 | 535·0 | 51·8 | 626·0 | 51·8 | W |
| 7 0 | 13·99 | 536·2 | 51·4 | 622·5 | 51·4 | W |
| 8 0 | 13·76 | 536·9 | 51·0 | 623·2 | 50·9 | W |
| 9 0† | 09·76 | 527·4 | 50·8 | 641·2 | 50·4 | W |
| 10 0 | 10·36 | 529·1 | 50·4 | 642·6 | 50·0 | W |
| 11 0 | 11·91 | 530·6 | 50·0 | 635·9 | 49·6 | H |
| 12 0 | 13·72 | 530·0 | 49·7 | 633·9 | 49·2 | H |
| 13 0 | 25 14·77 | 530·8 | 49·2 | 621·5 | 48·7 | H |
| 14 0 | 13·94 | 529·8 | 48·8 | 614·9 | 48·2 | H |
| 15 0 | 15·14 | 532·7 | 48·5 | 612·7 | 47·7 | H |
| 16 0 | 15·11 | 532·5 | 48·0 | 612·9 | 47·3 | H |
| 17 0 | 14·13 | 535·8 | 47·7 | 611·5 | 47·0 | H |
| 18 0 | 14·92 | 534·1 | 47·3 | 612·4 | 46·5 | H |
| 19 0 | 15·22 | 535·0 | 46·9 | 611·1 | 46·0 | W |
| 20 0 | 14·20 | 529·7 | 46·4 | 614·5 | 45·5 | W |
| 21 0 | 14·82 | 533·1 | 46·0 | 612·2 | 45·0 | B |
| 22 0 | 15·04 | 529·5 | 45·7 | 617·2 | 44·7 | W |
| 23 0 | 15·64 | 529·8 | 45·3 | 616·0 | 44·5 | W |
| 21 0 0 | 17·49 | 530·2 | 45·0 | 618·2 | 44·5 | W |
| 1 0 | 18·50 | 530·1 | 45·0 | 617·3 | 44·7 | W |
| 2 0 | 18·52 | 533·7 | 45·0 | 622·9 | 45·0 | W |
| 3 0 | 16·46 | 528·8 | 45·2 | 628·5 | 45·5 | W |
| 4 0 | 15·62 | 534·1 | 45·6 | 632·7 | 46·1 | W |
| 5 0 | 15·11 | 535·7 | 46·0 | 626·5 | 46·5 | W |
| 6 0 | 15·39 | 535·9 | 46·4 | 622·2 | 46·6 | H |
| 7 0 | 14·24 | 536·8 | 46·3 | 618·0 | 46·5 | W |
| 8 0 | 14·50 | 534·4 | 46·2 | 619·0 | 46·3 | W |
| 9 0 | 13·81 | 533·8 | 46·0 | 619·5 | 46·0 | W |
| 10 0 | 12·87 | 533·6 | 45·8 | 617·1 | 45·5 | W |
| 11 0 | 13·14 | 541·6 | 45·5 | 607·1 | 45·0 | B |
| 12 0 | 13·46 | 533·3 | 45·0 | 608·8 | 44·5 | B |

DECLINATION. Magnet untouched, Nov. 11d—Dec. 25d.

BIFILAR. Observed 2m after the Declination $k = 0{\cdot}000140$. BALANCE. Observed 3m after the Declination, $k = 0{\cdot}0000085$.

† Extra Observations made.

Nov. 16d 10h. Only one reading of the declination was recorded; the arc of vibration at the time being less than 3′, the error cannot be more than 1′·5.

| Göttingen Mean Time of Declination Obs. | | | Declination. | Bifilar. | | Balance. | | Observer's Initial. |
|---|---|---|---|---|---|---|---|---|
| | | | | Corrected. | Thermometer. | Corrected. | Thermometer. | |
| d. | h. | m. | ° ′ | Sc. Div. | ° | Mic. Div. | ° | |
| 21 | 13 | 0 | 25 12·70 | 531·1 | 44·6 | 611·0 | 44·0 | B |
| | 14 | 0 | 13·46 | 532·2 | 44·2 | 607·4 | 43·5 | B |
| | 15 | 0† | 22·20 | 538·1 | 43·8 | 592·1 | 43·0 | B |
| | 16 | 0 | 10·41 | 537·9 | 43·3 | 575·9 | 42·5 | B |
| | 17 | 0 | 13·30 | 538·2 | 42·8 | 578·9 | 42·0 | B |
| | 18 | 0 | 13·37 | 538·6 | 42·3 | 584·9 | 41·4 | B |
| | 19 | 0 | 13·22 | 541·0 | 41·8 | 586·7 | 40·8 | W |
| | 20 | 0 | 16·95 | 535·6 | 41·3 | 590·5 | 40·3 | W |
| | 21 | 0 | 19·34 | 537·0 | 40·8 | 580·6 | 39·7 | H |
| | 22 | 0 | 19·15 | 517·3 | 40·3 | 598·1 | 39·3 | W |
| | 23 | 0 | 27·61 | 507·3 | 40·0 | 612·8 | 39·0 | H |
| 22 | 0 | 0† | 26·28 | 526·5 | 39·7 | 610·8 | 38·8 | H |
| | 1 | 0† | 22·80 | 534·1 | 39·4 | 624·0 | 38·7 | H |
| | 2 | 0 | 22·74 | 534·9 | 39·2 | 625·8 | 38·7 | H |
| | 3 | 0 | 20·50 | 531·0 | 39·1 | 628·1 | 38·7 | H |
| | 4 | 0 | 20·03 | 527·0 | 39·0 | 633·9 | 38·8 | H |
| | 5 | 0† | 15·32 | 514·1 | 39·0 | 671·4 | 38·9 | W |
| | 6 | 0† | 20·08 | 526·4 | 39·0 | 692·2 | 39·0 | H |
| | 7 | 0† | 25 00·78 | 566·2 | 39·0 | 986·3 | 39·2 | B |
| | 8 | 0† | 24 48·97 | 494·2 | 30·0 | 774·2 | 39·5 | B |
| | 9 | 0† | 25 06·04 | 519·5 | 39·0 | 637·2 | 39·6 | B |
| | 10 | 0† | 25 13·76 | 510·8 | 39·1 | 626·2 | 39·8 | H |
| | 11 | 0† | 25 19·21 | 529·4 | 39·0 | 452·8 | 39·8 | W |
| | 12 | 0† | 24 45·78 | 526·0 | 39·0 | 419·5 | 39·6 | W |
| | 13 | 0† | 24 56·40 | 496·8 | 39·0 | 423·9 | 39·6 | W |
| | 14 | 0† | 25 03·63 | 518·1 | 39·0 | 413·0 | 39·8 | W |
| | 15 | 0 | 11·37 | 506·2 | 39·0 | 468·0 | 39·8 | W |
| | 16 | 0 | 17·15 | 523·8 | 39·0 | 538·6 | 39·9 | W |
| | 17 | 0 | 12·58 | 533·8 | 39·0 | 548·8 | 39·9 | W |
| | 18 | 0† | 26·50 | 499·1 | 39·0 | 553·3 | 39·7 | W |
| | 19 | 0† | 19·55 | 533·7 | 39·1 | 558·7 | 39·8 | B |
| | 20 | 0 | 19·55 | 537·5 | 39·2 | 587·2 | 40·0 | B |
| | 21 | 0 | 18·50 | 524·9 | 39·2 | 604·9 | 40·0 | H |
| | 22 | 0 | 16·18 | 517·7 | 39·2 | 628·0 | 39·8 | H |
| | 23 | 0 | 15·81 | 526·4 | 39·2 | 628·0 | 39·7 | B |
| 23 | 0 | 0 | 18·99 | 512·3 | 39·2 | 645·3 | 39·8 | B |
| | 1 | 0 | 16·08 | 526·9 | 39·3 | 650·7 | 40·0 | B |
| | 2 | 0 | 19·53 | 530·1 | 39·5 | 648·0 | 40·2 | H |
| | 3 | 0 | 20·15 | 528·0 | 39·7 | 651·2 | 40·5 | H |
| | 4 | 0 | 16·13 | 534·7 | 39·9 | 649·0 | 40·5 | B |
| | 5 | 0 | 17·46 | 529·2 | 39·9 | 660·3 | 40·7 | B |
| | 6 | 0 | 25 13·63 | 532·9 | 40·0 | 658·2 | 40·9 | W |
| | 7 | 0† | 24 39·14 | 539·6 | 40·1 | 668·5 | 41·0 | W |
| | 8 | 0† | 25 12·31 | 524·3 | 40·3 | 628·5 | 41·3 | W |
| | 9 | 0† | 12·11 | 525·2 | 40·7 | 641·8 | 41·7 | H |
| | 10 | 0 | 10·70 | 526·9 | 40·9 | 639·9 | 41·9 | W |
| | 11 | 0 | 13·96 | 531·6 | 41·0 | 622·7 | 41·8 | H |
| | 12 | 0 | 13·72 | 529·6 | 41·0 | 613·6 | 41·7 | H |
| 24 | 13 | 0 | 25 11·51 | 529·1 | 37·9 | 580·8 | 37·5 | B |
| | 14 | 0 | 14·67 | 532·0 | 37·7 | 596·5 | 37·2 | B |
| | 15 | 0 | 14·38 | 532·5 | 37·3 | 599·8 | 36·8 | B |
| | 16 | 0 | 20·22 | 529·8 | 36·9 | 601·7 | 36·5 | B |
| | 17 | 0 | 14·20 | 535·0 | 36·6 | 590·4 | 36·1 | B |
| | 18 | 0 | 15·42 | 536·9 | 36·3 | 595·3 | 35·8 | B |
| | 19 | 0 | 14·62 | 538·0 | 36·0 | 597·3 | 35·6 | H |
| | 20 | 0 | 14·98 | 534·5 | 35·7 | 600·4 | 35·4 | H |

| Göttingen Mean Time of Declination Obs. | | | Declination. | Bifilar. | | Balance. | | Observer's Initial. |
|---|---|---|---|---|---|---|---|---|
| | | | | Corrected. | Thermometer. | Corrected. | Thermometer. | |
| d. | h. | m. | ° ′ | Sc. Div. | ° | Mic. Div. | ° | |
| 24 | 21 | 0 | 25 15·74 | 534·1 | 35·5 | 601·7 | 35·3 | W |
| | 22 | 0 | 15·52 | 531·7 | 35·3 | 601·9 | 35·1 | H |
| | 23 | 0 | 16·15 | 531·7 | 35·2 | 599·3 | 35·0 | H |
| 25 | 0 | 0 | 16·46 | 527·8 | 35·1 | 604·4 | 35·0 | H |
| | 1 | 0 | 18·48 | 530·1 | 35·1 | 606·3 | 35·2 | H |
| | 2 | 0 | 18·34 | 535·5 | 35·3 | 604·7 | 35·8 | H |
| | 3 | 0 | 18·43 | 538·6 | 35·7 | 611·2 | 36·4 | H |
| | 4 | 0 | 16·82 | 533·6 | 36·0 | 619·9 | 36·7 | H |
| | 5 | 0 | 13·32 | 541·5 | 36·4 | 621·3 | 37·0 | H |
| | 6 | 0 | 15·04 | 529·2 | 36·7 | 619·9 | 37·2 | B |
| | 7 | 0 | 10·90 | 536·3 | 36·8 | 622·6 | 37·3 | B |
| | 8 | 0 | 13·72 | 537·9 | 36·8 | 614·8 | 37·3 | B |
| | 9 | 0 | 14·11 | 534·4 | 36·8 | 612·7 | 37·2 | B |
| | 10 | 0 | 13·27 | 535·5 | 36·8 | 611·5 | 37·2 | B |
| | 11 | 0 | 12·51 | 537·3 | 36·7 | 606·0 | 37·0 | W |
| | 12 | 0 | 12·98 | 536·4 | 36·7 | 605·2 | 36·9 | W |
| | 13 | 0 | 25 12·78 | 532·9 | 36·5 | 604·4 | 36·8 | W |
| | 14 | 0 | 14·04 | 535·8 | 36·3 | 602·8 | 36·6 | W |
| | 15 | 0 | 12·75 | 534·2 | 36·1 | 603·4 | 36·5 | W |
| | 16 | 0 | 14·71 | 533·8 | 36·0 | 602·8 | 36·3 | W |
| | 17 | 0 | 16·39 | 533·3 | 35·9 | 601·4 | 36·1 | W |
| | 18 | 0 | 14·18 | 536·9 | 35·8 | 600·4 | 35·9 | W |
| | 19 | 0 | 14·37 | 536·3 | 35·7 | 603·6 | 35·8 | B |
| | 20 | 0 | 14·55 | 535·4 | 35·6 | 604·5 | 35·7 | B |
| | 21 | 0 | 13·79 | 536·2 | 35·5 | 605·3 | 35·6 | H |
| | 22 | 0 | 13·91 | 532·8 | 35·3 | 604·2 | 35·4 | H |
| | 23 | 0 | 14·70 | 531·1 | 35·2 | 605·2 | 35·4 | H |
| 26 | 0 | 0 | 16·73 | 531·5 | 35·2 | 609·6 | 35·5 | B |
| | 1 | 0 | 17·02 | 533·2 | 35·3 | 610·2 | 35·8 | H |
| | 2 | 0 | 16·63 | 536·5 | 35·5 | 610·9 | 36·2 | H |
| | 3 | 0 | 16·38 | 538·0 | 35·8 | 611·5 | 36·6 | H |
| | 4 | 0 | 15·47 | 539·2 | 36·2 | 613·9 | 37·0 | H |
| | 5 | 0 | 14·87 | 538·6 | 36·6 | 615·5 | 37·5 | H |
| | 6 | 0 | 14·71 | 537·4 | 37·0 | 614·0 | 37·9 | W |
| | 7 | 0 | 14·43 | 538·8 | 37·3 | 610·8 | 38·2 | W |
| | 8 | 0 | 14·43 | 537·4 | 37·6 | 609·0 | 38·5 | W |
| | 9 | 0 | 13·41 | 538·0 | 37·8 | 607·3 | 38·6 | W |
| | 10 | 0 | 13·90 | 537·5 | 38·0 | 606·4 | 38·9 | W |
| | 11 | 0 | 13·81 | 536·4 | 38·3 | 609·8 | 39·3 | H |
| | 12 | 0 | 13·66 | 537·3 | 38·7 | 609·7 | 39·7 | H |
| | 13 | 0 | 25 12·69 | 534·8 | 39·0 | 611·1 | 40·1 | H |
| | 14 | 0 | 14·43 | 534·6 | 39·3 | 609·7 | 40·5 | H |
| | 15 | 0 | 15·20 | 535·1 | 39·7 | 608·6 | 40·9 | H |
| | 16 | 0 | 14·73 | 536·4 | 40·0 | 608·9 | 41·2 | H |
| | 17 | 0 | 14·94 | 537·7 | 40·4 | 607·8 | 41·6 | H |
| | 18 | 0 | 14·73 | 540·7 | 40·8 | 606·1 | 41·9 | H |
| | 19 | 0 | 15·14 | 540·4 | 41·1 | 605·3 | 42·3 | W |
| | 20 | 0 | 14·51 | 542·7 | 41·5 | 601·3 | 42·5 | W |
| | 21 | 0 | 14·67 | 540·2 | 41·9 | 604·4 | 42·9 | W |
| | 22 | 0 | 14·82 | 536·9 | 42·1 | 603·8 | 43·2 | W |
| | 23 | 0 | 15·86 | 535·0 | 42·4 | 600·4 | 43·5 | W |
| 27 | 0 | 0 | 17·76 | 533·0 | 42·8 | 604·1 | 43·8 | W |
| | 1 | 0 | 18·67 | 532·5 | 43·0 | 610·2 | 44·1 | W |
| | 2 | 0 | 19·08 | 538·1 | 43·4 | 609·7 | 44·4 | W |
| | 3 | 0 | 17·94 | 540·0 | 43·8 | 611·8 | 44·7 | W |
| | 4 | 0 | 16·36 | 541·4 | 44·0 | 613·6 | 45·0 | W |

DECLINATION. Magnet untouched, Nov. 11d—Dec. 25d.

BIFILAR. Observed 2m after the Declination, $k = 0{\cdot}000140$. BALANCE. Observed 3m after the Declination $k = 0{\cdot}0000085$.

† Extra Observations made.

| Göttingen Mean Time of Declination Obs. | | | Declination. | Bifilar. | | Balance. | | Observer's Initial. | Göttingen Mean Time of Declination Obs. | | | Declination. | Bifilar. | | Balance. | | Observer's Initial. |
|---|---|---|---|---|---|---|---|---|---|---|---|---|---|---|---|---|---|
| | | | | Corrected. | Thermometer. | Corrected. | Thermometer. | | | | | | Corrected. | Thermometer. | Corrected. | Thermometer. | |
| d. | h. | m. | ° ′ | Sc. Div. | ° | Mic. Div. | ° | | d. | h. | m. | ° ′ | Sc. Div. | ° | Mic. Div. | ° | |
| 27 | 5 | 0 | 25 15·52 | 540·8 | 44·2 | 615·7 | 45·2 | W | 29 | 13 | 0 | 25 14·10 | 536·6 | 44·9 | 610·9 | 45·1 | D |
| | 6 | 0 | 14·53 | 541·0 | 44·5 | 613·6 | 45·5 | H | | 14 | 0 | 15·85 | 537·1 | 44·7 | 604·3 | 44·8 | D |
| | 7 | 0 | 13·86 | 541·7 | 44·8 | 610·6 | 45·7 | H | | 15 | 0 | 15·25 | 534·3 | 44·5 | 607·1 | 44·6 | D |
| | 8 | 0 | 13·72 | 541·8 | 45·1 | 606·8 | 46·0 | H | | 16 | 0 | 14·98 | 535·8 | 44·2 | 611·1 | 44·4 | D |
| | 9 | 0 | 13·05 | 542·1 | 45·3 | 605·3 | 46·2 | H | | 17 | 0 | 15·01 | 537·2 | 44·0 | 613·0 | 44·2 | D |
| | 10 | 0 | 12·95 | 540·8 | 45·5 | 605·6 | 46·4 | H | | 18 | 0 | 15·01 | 537·0 | 43·9 | 615·4 | 44·2 | H |
| | 11 | 0† | 05·85 | 544·9 | 45·7 | 601·1 | 46·5 | W | | 19 | 0 | 14·33 | 538·0 | 43·9 | 615·2 | 44·2 | H |
| | 12 | 0 | 08·58 | 532·2 | 45·9 | 609·2 | 46·8 | W | | 20 | 0 | 14·23 | 537·8 | 43·7 | 615·2 | 44·1 | H |
| | | | | | | | | | | 21 | 0 | 14·20 | 536·2 | 43·5 | 616·0 | 44·0 | H |
| | 13 | 0 | 25 12·22 | 532·1 | 46·0 | 565·1 | 46·9 | W | | 22 | 0 | 14·46 | 534·0 | 43·3 | 613·5 | 43·7 | W |
| | 14 | 0 | 08·01 | 531·4 | 46·1 | 572·5 | 46·9 | W | | 23 | 0 | 15·32 | 532·7 | 43·1 | 610·6 | 43·3 | W |
| | 15 | 0 | 11·34 | 534·4 | 46·1 | 584·9 | 46·9 | W | 30 | 0 | 0 | 16·45 | 534·0 | 43·0 | 610·7 | 43·1 | C |
| | 16 | 0 | 11·24 | 534·9 | 46·1 | 591·2 | 46·8 | W | | 1 | 0 | 17·31 | 534·6 | 42·9 | 609·4 | 43·1 | C |
| | 17 | 0 | 08·90 | 535·5 | 46·1 | 583·9 | 46·7 | W | | 2 | 0 | 17·65 | 535·6 | 42·9 | 610·6 | 43·2 | C |
| | 18 | 0 | 07·17 | 547·9 | 46·1 | 576·8 | 46·7 | W | | 3 | 0 | 16·05 | 536·4 | 42·9 | 614·2 | 43·2 | H |
| | 19 | 0 | 13·09 | 541·7 | 46·1 | 576·9 | 46·7 | H | | 4 | 0 | 15·62 | 537·6 | 42·8 | 617·2 | 43·4 | C |
| | 20 | 0 | 16·36 | 547·4 | 46·1 | 570·0 | 46·6 | H | | 5 | 0 | 14·43 | 540·2 | 42·9 | 617·1 | 43·5 | C |
| | 21 | 0 | 18·40 | 553·0 | 46·0 | 568·5 | 46·5 | H | | 6 | 0 | 14·64 | 540·5 | 43·0 | 610·4 | 43·7 | D |
| | 22 | 0 | 17·73 | 542·0 | 45·9 | 575·2 | 46·4 | H | | 7 | 0 | 14·40 | 540·0 | 43·2 | 609·2 | 44·0 | D |
| | 23 | 0 | 19·55 | 527·0 | 45·8 | 585·9 | 46·2 | H | | 8 | 0 | 14·08 | 537·8 | 43·2 | 608·1 | 44·2 | H |
| 28 | 0 | 0 | 22·10 | 535·8 | 45·8 | 591·9 | 46·2 | H | | 9 | 0 | 13·76 | 539·1 | 43·3 | 607·0 | 44·2 | W |
| | 1 | 0 | 23·58 | 535·6 | 45·8 | 600·6 | 46·2 | H | | 10 | 0 | 13·09 | 539·1 | 43·3 | 606·7 | 44·2 | W |
| | 2 | 0 | 25·93 | 530·2 | 45·8 | 617·6 | 46·2 | H | | 11 | 0 | 14·57 | 538·9 | 43·3 | 605·0 | 44·0 | W |
| | 3 | 0 | 25·63 | 527·6 | 45·8 | 637·4 | 46·3 | H | | 12 | 0 | 13·46 | 536·3 | 43·2 | 603·0 | 43·7 | W |
| | 4 | 0 | 21·97 | 532·1 | 45·8 | 654·7 | 46·3 | H | | | | | | | | | |
| | 5 | 0 | 20·00 | 525·5 | 45·9 | 692·2 | 46·3 | H | 1 | 13 | 0 | 25 13·12 | 536·0 | 40·7 | 611·0 | 40·8 | H |
| | 6 | 0 | 16·03 | 532·9 | 46·0 | 674·7 | 46·4 | W | | 14 | 0 | 14·82 | 537·2 | 40·7 | 610·9 | 40·8 | H |
| | 7 | 0 | 14·64 | 535·8 | 46·0 | 659·6 | 46·5 | W | | 15 | 0 | 14·50 | 538·0 | 40·6 | 610·7 | 40·8 | H |
| | 8 | 0 | 14·70 | 539·0 | 46·1 | 638·2 | 46·6 | W | | 16 | 0 | 13·12 | 537·4 | 40·4 | 608·4 | 40·8 | H |
| | 9 | 0 | 14·15 | 539·4 | 46·1 | 625·8 | 46·7 | W | | 17 | 0 | 13·79 | 538·4 | 40·3 | 607·3 | 40·7 | H |
| | 10 | 0 | 13·23 | 538·1 | 46·2 | 618·7 | 46·6 | W | | 18 | 0 | 14·37 | 539·3 | 40·3 | 606·4 | 40·6 | H |
| | 11 | 0 | 12·73 | 532·1 | 46·3 | 619·7 | 46·7 | H | | 19 | 0 | 14·01 | 539·7 | 40·2 | 603·1 | 40·5 | W |
| | 12 | 0 | 12·06 | 537·3 | 46·3 | 615·1 | 46·7 | H | | 20 | 0 | 13·57 | 539·9 | 40·1 | 602·3 | 40·4 | W |
| | | | | | | | | | | 21 | 0 | 14·53 | 537·6 | 40·0 | 603·9 | 40·1 | B |
| | 13 | 0 | 25 13·05 | 540·7 | 46·3 | 605·7 | 46·6 | H | | 22 | 0 | 14·33 | 536·6 | 39·9 | 606·1 | 40·0 | W |
| | 14 | 0 | 13·74 | 539·1 | 46·3 | 601·2 | 46·6 | H | | 23 | 0 | 15·27 | 535·2 | 39·8 | 606·6 | 40·0 | W |
| | 15 | 0 | 21·10 | 533·1 | 46·3 | 605·4 | 46·5 | H | 2 | 0 | 0 | 16·23 | 533·2 | 39·7 | 605·1 | 40·0 | W |
| | 16 | 0 | 12·53 | 538·1 | 46·2 | 589·1 | 46·5 | H | | 1 | 0 | 18·30 | 537·1 | 39·7 | 609·7 | 39·9 | W |
| | 17 | 0 | 13·86 | 532·9 | 46·0 | 599·7 | 46·5 | H | | 2 | 0 | 17·49 | 540·9 | 39·7 | 609·9 | 39·9 | W |
| | 18 | 0 | 14·67 | 538·0 | 46·0 | 597·0 | 46·5 | H | | 3 | 0 | 17·00 | 541·3 | 39·7 | 610·3 | 39·9 | W |
| | 19 | 0 | 08·14 | 545·0 | 46·0 | 588·9 | 46·4 | W | | 4 | 0 | 15·52 | 543·5 | 39·7 | 609·3 | 39·9 | W |
| | 20 | 0 | 14·60 | 536·7 | 46·0 | 595·9 | 46·3 | W | | 5 | 0 | 13·49 | 533·5 | 39·7 | 615·9 | 40·0 | H |
| | 21 | 0 | 14·58 | 541·9 | 45·9 | 592·7 | 46·1 | W | | 6 | 0† | 06·23 | 540·9 | 39·7 | 618·3 | 40·0 | W |
| | 22 | 0 | 13·81 | 531·8 | 45·8 | 599·7 | 46·0 | W | | 7 | 0 | 14·17 | 542·9 | 39·7 | 615·9 | 40·2 | H |
| | 23 | 0 | 15·67 | 532·9 | 45·8 | 600·3 | 45·9 | W | | 8 | 0 | 14·78 | 541·1 | 39·7 | 615·5 | 40·2 | H |
| 29 | 0 | 0 | 16·28 | 531·6 | 45·7 | 604·4 | 45·8 | W | | 9 | 0 | 13·72 | 542·4 | 39·7 | 612·8 | 40·1 | H |
| | 1 | 0 | 17·58 | 533·8 | 45·7 | 608·0 | 45·8 | W | | 10 | 0 | 14·03 | 541·1 | 39·7 | 609·2 | 40·0 | H |
| | 2 | 0 | 17·46 | 535·8 | 45·6 | 610·5 | 45·8 | W | | 11 | 0 | 13·52 | 538·7 | 39·6 | 607·9 | 39·9 | B |
| | 3 | 0 | 17·71 | 537·6 | 45·7 | 617·1 | 45·8 | W | | 12 | 0 | 12·43 | 538·8 | 39·5 | 604·5 | 39·8 | B |
| | 4 | 0 | 18·41 | 536·6 | 45·7 | 620·9 | 45·9 | W | | | | | | | | | |
| | 5 | 0 | 20·45 | 536·9 | 45·7 | 624·0 | 45·9 | W | | 13 | 0 | 25 13·02 | 537·6 | 39·4 | 602·4 | 39·8 | B |
| | 6 | 0 | 18·20 | 536·3 | 45·6 | 627·1 | 45·8 | H | | 14 | 0 | 14·71 | 535·3 | 39·4 | 599·3 | 39·7 | B |
| | 7 | 0 | 15·32 | 537·3 | 45·6 | 624·7 | 45·8 | H | | 15 | 0 | 12·78 | 534·1 | 39·3 | 597·5 | 39·6 | B |
| | 8 | 0 | 14·57 | 538·1 | 45·5 | 620·9 | 45·7 | H | | 16 | 0 | 15·61 | 535·9 | 39·2 | 598·0 | 39·5 | B |
| | 9 | 0 | 12·15 | 537·1 | 45·4 | 617·5 | 45·5 | H | | 17 | 0 | 13·83 | 538·3 | 39·1 | 602·7 | 39·5 | B |
| | 10 | 0 | 10·92 | 535·7 | 45·2 | 617·6 | 45·2 | W | | 18 | 0 | 13·19 | 540·8 | 39·0 | 603·8 | 39·4 | B |
| | 11 | 0 | 12·83 | 539·5 | 45·0 | 613·3 | 45·2 | W | | 19 | 0 | 13·66 | 542·7 | 39·0 | 604·6 | 39·4 | H |
| | 12 | 0 | 13·86 | 534·4 | 45·0 | 610·2 | 45·2 | W | | 20 | 0 | 13·96 | 541·6 | 39·0 | 605·3 | 39·4 | H |

DECLINATION. Magnet untouched, Nov. 11d—Dec. 25d.

BIFILAR. Observed 2m after the Declination, $k$=0·000140. BALANCE. Observed 3m after the Declination, $k$=0·0000085.

† Extra Observations made.

| Göttingen Mean Time of Declination Obs. | Declination. | Bifilar. Corrected. | Bifilar. Thermometer. | Balance. Corrected. | Balance. Thermometer. | Observer's Initial. |
|---|---|---|---|---|---|---|
| d. h. m. | ° ′ | Sc. Div. | ° | Mic. Div. | ° | |
| 2 21 0 | 25 14·17 | 536·7 | 38·9 | 607·8 | 39·3 | W |
| 22 0 | 13·19 | 536·3 | 38·8 | 608·1 | 39·2 | H |
| 23 0 | 14·33 | 532·7 | 38·8 | 610·2 | 39·2 | H |
| 3 0 0 | 16·63 | 531·1 | 38·8 | 610·0 | 39·2 | H |
| 1 0 | 16·82 | 532·7 | 38·8 | 607·3 | 39·2 | H |
| 2 0 | 17·15 | 536·6 | 38·8 | 606·8 | 39·3 | H |
| 3 0 | 16·38 | 538·8 | 38·9 | 607·4 | 39·3 | H |
| 4 0 | 14·75 | 540·9 | 39·0 | 610·7 | 39·4 | H |
| 5 0 | 14·67 | 541·9 | 39·0 | 609·5 | 39·5 | H |
| 6 0 | 14·46 | 542·3 | 38·9 | 607·9 | 39·5 | B |
| 7 0 | 14·53 | 541·0 | 38·9 | 607·4 | 39·5 | B |
| 8 0 | 14·03 | 540·6 | 38·9 | 607·7 | 39·4 | B |
| 9 0 | 14·50 | 540·9 | 38·9 | 607·0 | 39·3 | W |
| 10 3 | 13·76 | 539·8 | 38·9 | 605·5 | 39·1 | B |
| 11 0 | 12·73 | 540·1 | 38·8 | 604·9 | 39·0 | W |
| 12 0 | 12·62 | 536·5 | 38·7 | 605·7 | 38·9 | W |
| 13 0 | 25 11·64 | 537·6 | 38·5 | 603·8 | 38·7 | W |
| 14 0 | 13·59 | 536·3 | 38·3 | 602·3 | 38·5 | W |
| 15 0 | 14·24 | 536·7 | 38·1 | 604·1 | 38·3 | W |
| 16 0 | 13·39 | 535·0 | 38·0 | 603·7 | 38·0 | W |
| 17 0 | 14·89 | 537·9 | 37·8 | 603·9 | 37·8 | W |
| 18 0 | 14·46 | 539·6 | 37·6 | 604·6 | 37·5 | W |
| 19 0 | 13·84 | 539·1 | 37·4 | 606·6 | 37·2 | B |
| 20 0 | 14·23 | 540·3 | 37·1 | 607·7 | 37·0 | B |
| 21 0 | 13·83 | 538·9 | 36·9 | 608·4 | 36·9 | H |
| 22 0 | 14·37 | 535·5 | 36·8 | 611·3 | 36·7 | H |
| 23 0 | 15·71 | 543·4 | 36·7 | 604·4 | 36·7 | B |
| 4 0 0 | 18·90 | 546·0 | 36·7 | 603·4 | 36·7 | H |
| 1 0 | 21·59 | 547·4 | 36·5 | 599·6 | 36·9 | H |
| 2 0 | 25·31 | 531·4 | 36·7 | 605·1 | 37·0 | B |
| 3 0 | 17·63 | 542·7 | 36·8 | 603·5 | 37·4 | H |
| 4 0 | 21·34 | 547·5 | 37·2 | 598·2 | 37·7 | H |
| 5 0 | 20·65 | 544·3 | 37·3 | 601·7 | 37·9 | H |
| 6 0 | 17·26 | 540·4 | 37·4 | 609·7 | 37·9 | W |
| 7 0 | 17·04 | 543·9 | 37·4 | 608·2 | 37·8 | W |
| 8 0† | 17·49 | 528·1 | 37·3 | 651·1 | 37·6 | W |
| 9 0 | 14·80 | 540·0 | 37·1 | 635·6 | 37·5 | W |
| 10 0 | 12·78 | 531·2 | 37·0 | 624·0 | 37·2 | W |
| 11 0† | 02·55 | 538·7 | 36·8 | 609·3 | 36·9 | H |
| 12 0† | 06·34 | 523·9 | 36·7 | 598·9 | 36·7 | H |
| 13 0 | 25 10·94 | 534·9 | 36·4 | 576·6 | 36·4 | H |
| 14 0 | 11·35 | 532·2 | 36·0 | 582·2 | 36·1 | H |
| 15 0 | 11·00 | 543·9 | 35·9 | 558·5 | 35·9 | H |
| 16 0 | 16·55 | 539·1 | 35·7 | 555·1 | 35·6 | H |
| 17 0 | 11·27 | 539·0 | 35·4 | 559·0 | 35·4 | H |
| 18 0 | 11·79 | 535·5 | 35·2 | 570·3 | 35·1 | H |
| 19 0 | 13·05 | 538·0 | 34·9 | 577·9 | 34·7 | W |
| 20 0 | 12·55 | 534·6 | 34·6 | 585·5 | 34·4 | W |
| 21 0 | 13·77 | 535·6 | 34·3 | 589·2 | 33·8 | B |
| 22 0 | 13·67 | 527·4 | 33·9 | 594·0 | 33·4 | W |
| 23 0 | 15·59 | 531·4 | 33·6 | 593·9 | 33·1 | W |
| 5 0 0 | 17·44 | 532·3 | 33·4 | 594·3 | 33·0 | W |
| 1 0 | 17·93 | 534·1 | 33·3 | 595·6 | 33·2 | W |
| 2 0 | 17·81 | 535·5 | 33·3 | 597·8 | 33·4 | W |
| 3 0 | 16·59 | 537·2 | 33·3 | 601·7 | 33·6 | W |
| 4 0 | 16·05 | 540·6 | 33·5 | 602·4 | 33·7 | W |
| 5 5 0 | 25 15·54 | 540·0 | 33·6 | 602·2 | 33·9 | W |
| 6 0 | 15·86 | 540·2 | 33·6 | 601·1 | 33·9 | H |
| 7 0 | 15·61 | 540·0 | 33·5 | 600·0 | 33·7 | W |
| 8 0 | 14·98 | 538·2 | 33·3 | 592·5 | 33·5 | W |
| 9 0 | 07·89 | 537·2 | 33·1 | 607·3 | 33·1 | W |
| 10 0 | 13·16 | 535·1 | 32·9 | 604·9 | 32·8 | H |
| 11 0 | 14·06 | 535·6 | 32·7 | 607·3 | 32·5 | B |
| 12 0 | 13·86 | 536·3 | 32·4 | 603·0 | 32·2 | B |
| 13 0 | 25 13·69 | 535·6 | 32·1 | 599·5 | 31·8 | B |
| 14 0 | 14·23 | 537·0 | 31·8 | 599·0 | 31·4 | B |
| 15 0 | 13·79 | 536·5 | 31·5 | 597·1 | 31·0 | B |
| 16 0 | 13·12 | 535·8 | 31·1 | 596·1 | 30·5 | B |
| 17 0 | 13·79 | 537·2 | 30·8 | 595·3 | 30·1 | B |
| 18 13 | 14·10 | 537·2 | 30·3 | 595·9 | 29·6 | B |
| 19 0 | 14·08 | 537·2 | 30·0 | 595·6 | 29·3 | H |
| 20 0 | 13·72 | 537·2 | 29·7 | 597·3 | 29·0 | H |
| 21 0 | 13·86 | 535·6 | 29·3 | 599·4 | 28·6 | W |
| 22 0 | 12·96 | 535·1 | 28·9 | 599·9 | 28·2 | H |
| 23 0 | 13·99 | 533·8 | 28·7 | 597·2 | 28·0 | H |
| 6 0 0 | 15·12 | 532·9 | 28·5 | 598·0 | 28·0 | H |
| 1 0 | 16·45 | 533·1 | 28·4 | 597·7 | 28·0 | H |
| 2 0 | 17·46 | 538·3 | 28·4 | 599·0 | 28·2 | H |
| 3 0 | 17·49 | 542·4 | 28·5 | 601·6 | 28·5 | H |
| 4 0 | 15·56 | 529·6 | 28·8 | 601·9 | 28·9 | H |
| 5 0 | 15·67 | 541·9 | 29·2 | 598·9 | 29·5 | H |
| 6 0 | 16·46 | 541·2 | 29·4 | 603·2 | 30·0 | B |
| 7 0 | 15·39 | 535·1 | 29·5 | 605·6 | 30·0 | B |
| 8 0 | 14·84 | 540·7 | 29·5 | 603·6 | 29·8 | B |
| 9 0 | 14·35 | 540·5 | 29·4 | 602·8 | 29·6 | B |
| 10 0 | 13·36 | 538·3 | 29·2 | 603·6 | 29·2 | B |
| 11 0 | 12·78 | 542·3 | 29·0 | 602·8 | 29·0 | W |
| 12 0 | 13·43 | 541·6 | 28·8 | 600·8 | 28·8 | W |
| 13 0 | 25 14·01 | 538·8 | 28·6 | 599·7 | 28·5 | W |
| 14 0 | 14·20 | 538·8 | 28·5 | 597·6 | 28·3 | W |
| 15 0 | 14·55 | 538·3 | 28·3 | 596·4 | 28·1 | W |
| 16 0 | 14·62 | 539·3 | 28·1 | 596·0 | 27·9 | W |
| 17 0 | 14·38 | 539·5 | 27·9 | 594·7 | 27·7 | W |
| 18 0 | 14·04 | 539·2 | 27·7 | 594·4 | 27·4 | W |
| 19 0 | 14·10 | 539·9 | 27·5 | 594·1 | 27·2 | B |
| 20 0 | 13·86 | 538·3 | 27·2 | 595·4 | 26·9 | B |
| 21 0 | 13·41 | 536·9 | 26·9 | 597·6 | 26·6 | H |
| 22 0 | 13·52 | 534·5 | 26·6 | 597·4 | 26·3 | H |
| 23 0 | 14·64 | 534·7 | 26·3 | 595·5 | 26·0 | H |
| 7 0 0 | 15·52 | 535·6 | 26·2 | 596·0 | 26·0 | H |
| 1 0 | 17·34 | 535·0 | 26·1 | 594·8 | 26·2 | H |
| 2 0 | 17·76 | 539·4 | 26·1 | 597·5 | 26·5 | H |
| 3 0 | 16·99 | 540·6 | 26·3 | 600·8 | 27·2 | B |
| 4 0 | 15·54 | 541·6 | 26·8 | 600·7 | 27·8 | H |
| 5 0 | 14·80 | 541·6 | 27·1 | 598·6 | 28·0 | B |
| 6 0 | 14·46 | 541·9 | 27·5 | 597·7 | 28·3 | W |
| 7 0 | 14·20 | 541·6 | 27·7 | 597·8 | 28·4 | W |
| 8 0 | 14·08 | 540·7 | 27·8 | 596·6 | 28·5 | W |
| 9 0 | 13·93 | 540·5 | 28·0 | 598·1 | 28·7 | W |
| 10 0 | 13·96 | 538·2 | 28·1 | 601·0 | 28·9 | W |
| 11 0 | 11·84 | 534·4 | 28·3 | 608·7 | 29·3 | H |
| 12 0 | 13·86 | 537·0 | 28·6 | 605·9 | 29·6 | H |

DECLINATION. Magnet untouched, Nov. 11d—Dec. 25d.

BIFILAR. Observed 2m after the Declination, $k=0{\cdot}000140$. BALANCE. Observed 3m after the Declination, $k=0{\cdot}0000085$.

† Extra Observations made.

| Göttingen Mean Time of Declination Obs. | Declination. | Bifilar. Corrected. | Bifilar. Thermometer. | Balance. Corrected. | Balance. Thermometer. | Observer's Initial. |
|---|---|---|---|---|---|---|
| d. h. m. | ° ′ | Sc. Div. | ° | Mic. Div. | ° | |
| 8 13 0 | 25 14·23 | 539·7 | 29·0 | 599·5 | 29·8 | B |
| 14 0 | 14·38 | 540·0 | 29·2 | 597·3 | 29·9 | B |
| 15 0 | 14·54 | 539·5 | 29·4 | 596·1 | 30·1 | B |
| 16 0 | 14·60 | 540·2 | 29·6 | 594·5 | 30·3 | B |
| 17 0 | 14·23 | 540·1 | 29·7 | 591·9 | 30·4 | B |
| 18 0 | 14·24 | 540·3 | 29·8 | 590·4 | 30·5 | B |
| 19 0 | 14·41 | 540·4 | 29·9 | 589·3 | 30·6 | H |
| 20 0 | 14·06 | 540·1 | 30·0 | 589·8 | 30·7 | H |
| 21 0 | 13·72 | 538·1 | 30·1 | 593·2 | 30·8 | W |
| 22 0 | 13·25 | 535·8 | 30·2 | 595·1 | 30·9 | H |
| 23 0 | 14·18 | 535·8 | 30·3 | 596·1 | 31·0 | H |
| 9 0 0 | 15·85 | 535·4 | 30·3 | 595·8 | 31·0 | H |
| 1 0 | 16·79 | 537·7 | 30·4 | 596·3 | 31·1 | H |
| 2 0 | 16·73 | 540·6 | 30·6 | 596·9 | 31·2 | H |
| 3 0 | 16·28 | 542·9 | 30·7 | 596·3 | 31·3 | H |
| 4 0 | 15·74 | 543·2 | 30·9 | 597·9 | 31·5 | H |
| 5 0 | 14·84 | 542·7 | 31·0 | 596·8 | 31·9 | H |
| 6 0 | 14·41 | 543·1 | 31·1 | 594·8 | 32·0 | B |
| 7 0 | 13·79 | 541·6 | 31·2 | 593·3 | 32·0 | B |
| 8 0 | 13·46 | 542·8 | 31·3 | 592·1 | 32·0 | B |
| 9 0 | 13·39 | 541·1 | 31·3 | 593·5 | 32·1 | B |
| 10 0 | 13·32 | 540·6 | 31·4 | 594·3 | 32·1 | B |
| 11 0 | 13·46 | 541·1 | 31·4 | 593·6 | 32·1 | W |
| 12 0 | 13·97 | 541·3 | 31·4 | 592·1 | 32·0 | W |
| 13 0 | 25 14·28 | 540·6 | 31·4 | 592·4 | 32·0 | W |
| 14 0 | 14·64 | 540·7 | 31·4 | 590·6 | 31·9 | W |
| 15 0 | 15·14 | 537·7 | 31·4 | 591·4 | 31·9 | W |
| 16 0 | 16·38 | 539·9 | 31·4 | 589·4 | 31·9 | W |
| 17 0 | 14·28 | 541·3 | 31·5 | 580·8 | 32·0 | W |
| 18 0 | 09·96 | 541·7 | 31·5 | 579·6 | 32·0 | W |
| 19 0 | 12·36 | 545·5 | 31·6 | 579·2 | 32·1 | B |
| 20 0 | 14·17 | 538·9 | 31·7 | 583·0 | 32·2 | B |
| 21 0 | 13·77 | 543·9 | 31·7 | 580·4 | 32·2 | H |
| 22 0 | 16·01 | 539·5 | 31·8 | 581·8 | 32·3 | H |
| 23 0 | 15·94 | 534·3 | 31·9 | 588·4 | 32·4 | H |
| 10 0 0 | 18·10 | 535·5 | 31·9 | 595·3 | 32·8 | B |
| 1 0 | 18·16 | 536·8 | 32·0 | 598·0 | 33·0 | H |
| 2 0 | 17·15 | 537·7 | 32·3 | 596·9 | 33·2 | H |
| 3 0 | 17·58 | 539·4 | 32·5 | 602·5 | 33·3 | H |
| 4 0 | 16·12 | 536·5 | 32·7 | 607·7 | 33·5 | B |
| 5 0 | 15·78 | 542·7 | 32·8 | 603·2 | 33·6 | B |
| 6 0 | 14·43 | 543·5 | 32·8 | 599·1 | 33·6 | W |
| 7 0 | 14·03 | 542·2 | 32·9 | 597·0 | 33·7 | W |
| 8 0 | 13·72 | 540·0 | 33·0 | 596·1 | 33·8 | W |
| 9 0 | 13·52 | 539·2 | 33·0 | 595·4 | 33·8 | W |
| 10 0 | 13·17 | 537·8 | 33·1 | 595·8 | 33·8 | W |
| 11 0 | 12·35 | 537·0 | 33·2 | 596·5 | 33·8 | H |
| 12 0 | 12·60 | 538·8 | 33·2 | 596·6 | 33·9 | H |
| 13 0 | 25 13·34 | 540·6 | 33·2 | 592·0 | 34·0 | H |
| 14 0 | 13·94 | 541·8 | 33·2 | 589·7 | 34·0 | H |
| 15 0 | 14·37 | 540·1 | 33·3 | 590·1 | 34·0 | H |
| 16 0 | 15·17 | 541·1 | 33·3 | 590·0 | 34·0 | H |
| 17 0 | 15·17 | 542·6 | 33·3 | 588·2 | 33·9 | H |
| 18 0 | 14·98 | 544·4 | 33·3 | 587·3 | 33·9 | H |
| 19 0 | 14·44 | 544·7 | 33·2 | 584·0 | 33·8 | W |
| 20 0 | 14·53 | 545·0 | 33·1 | 581·9 | 33·7 | W |

| Göttingen Mean Time of Declination Obs. | Declination. | Bifilar. Corrected. | Bifilar. Thermometer. | Balance. Corrected. | Balance. Thermometer. | Observer's Initial. |
|---|---|---|---|---|---|---|
| d. h. m. | ° ′ | Sc. Div. | ° | Mic. Div. | ° | |
| 10 21 0 | 25 13·77 | 543·5 | 33·1 | 585·1 | 33·7 | B |
| 22 0 | 13·47 | 541·1 | 33·1 | 584·8 | 33·6 | W |
| 23 0 | 14·21 | 540·2 | 33·0 | 583·5 | 33·6 | W |
| 11 0 0 | 15·79 | 538·8 | 33·0 | 586·4 | 33·6 | W |
| 1 0 | 17·15 | 539·7 | 33·0 | 588·8 | 33·5 | W |
| 2 0 | 16·84 | 536·7 | 33·0 | 592·6 | 33·5 | W |
| 3 0 | 18·82 | 540·2 | 33·0 | 594·8 | 33·5 | W |
| 4 0 | 18·55 | 539·3 | 33·0 | 596·7 | 33·5 | W |
| 5 0 | 15·98 | 542·1 | 33·0 | 595·6 | 33·5 | W |
| 6 0 | 15·11 | 541·2 | 33·0 | 595·4 | 33·5 | H |
| 7 0 | 14·24 | 542·1 | 33·0 | 593·2 | 33·5 | H |
| 8 0 | 13·74 | 541·3 | 33·0 | 592·1 | 33·5 | H |
| 9 0 | 13·16 | 538·1 | 33·0 | 593·2 | 33·5 | H |
| 10 0 | 12·98 | 536·4 | 33·0 | 591·6 | 33·4 | H |
| 11 2 | 11·22 | 539·5 | 32·9 | 588·9 | 33·3 | B |
| 12 0 | 12·42 | 542·6 | 32·9 | 585·6 | 33·2 | B |
| 13 0 | 25 13·07 | 542·5 | 32·8 | 581·0 | 33·1 | B |
| 14 0 | 13·47 | 540·9 | 32·8 | 581·7 | 33·0 | B |
| 15 0 | 14·26 | 540·9 | 32·7 | 584·0 | 32·9 | B |
| 16 0 | 14·67 | 541·7 | 32·6 | 584·7 | 32·8 | B |
| 17 0 | 14·84 | 542·5 | 32·5 | 582·9 | 32·7 | B |
| 18 0 | 13·91 | 544·4 | 32·4 | 581·9 | 32·6 | B |
| 19 0 | 14·15 | 543·0 | 32·3 | 582·9 | 32·6 | H |
| 20 0 | 14·37 | 543·1 | 32·2 | 581·1 | 32·5 | H |
| 21 0 | 13·93 | 542·9 | 32·2 | 589·8 | 32·4 | W |
| 22 0 | 14·64 | 540·9 | 32·1 | 581·1 | 32·4 | H |
| 23 0 | 14·53 | 538·5 | 32·1 | 581·0 | 32·3 | H |
| 12 0 0 | 15·91 | 536·9 | 32·0 | 582·1 | 32·2 | H |
| 1 0 | 16·15 | 537·6 | 32·0 | 586·4 | 32·2 | H |
| 2 0 | 16·48 | 539·5 | 32·0 | 582·8 | 32·2 | H |
| 3 0 | 16·01 | 540·0 | 32·0 | 585·6 | 32·3 | H |
| 4 0 | 15·31 | 541·3 | 32·0 | 588·1 | 32·4 | H |
| 5 0 | 14·48 | 542·0 | 32·0 | 589·9 | 32·5 | W |
| 6 0 | 14·18 | 542·7 | 32·1 | 590·2 | 32·6 | B |
| 7 0 | 14·48 | 541·4 | 32·1 | 591·1 | 32·6 | B |
| 8 0 | 14·31 | 540·7 | 32·1 | 590·2 | 32·6 | B |
| 9 0 | 13·27 | 540·2 | 32·0 | 589·0 | 32·5 | B |
| 10 0 | 13·09 | 537·8 | 32·0 | 590·1 | 32·5 | B |
| 11 0 | 12·98 | 537·6 | 32·0 | 589·7 | 32·5 | W |
| 12 0 | 12·93 | 539·5 | 32·0 | 587·8 | 32·5 | W |
| 13 0 | 25 13·43 | 538·6 | 32·0 | 588·5 | 32·5 | W |
| 14 0 | 14·37 | 537·8 | 32·0 | 588·1 | 32·5 | W |
| 15 0 | 14·71 | 540·5 | 32·0 | 586·0 | 32·4 | W |
| 16 0 | 14·70 | 540·6 | 32·0 | 586·6 | 32·4 | W |
| 17 0 | 14·60 | 542·2 | 32·0 | 584·6 | 32·4 | W |
| 18 0 | 14·26 | 544·4 | 32·0 | 582·3 | 32·4 | W |
| 19 0 | 14·80 | 544·2 | 32·0 | 581·4 | 32·4 | B |
| 20 0 | 14·78 | 544·3 | 31·9 | 579·4 | 32·2 | B |
| 21 0 | 14·55 | 540·0 | 31·8 | 581·9 | 32·1 | H |
| 22 0 | 14·06 | 538·1 | 31·7 | 583·8 | 32·0 | H |
| 23 0 | 15·25 | 536·6 | 31·7 | 585·6 | 32·0 | H |
| 13 0 0 | 16·38 | 535·6 | 31·7 | 589·0 | 32·1 | B |
| 1 0 | 17·46 | 536·8 | 31·6 | 586·0 | 32·1 | H |
| 2 0 | 16·68 | 539·0 | 31·7 | 584·0 | 32·2 | H |
| 3 0 | 16·21 | 538·4 | 31·8 | 592·0 | 32·5 | B |
| 4 0 | 15·14 | 538·4 | 31·8 | 594·1 | 32·4 | H |

DECLINATION. Magnet untouched, Nov. 11d—Dec. 25d.

BIFILAR. Observed 2m after the Declination, $k=0{\cdot}000140$. BALANCE. Observed 3m after the Declination, $k=0{\cdot}0000085$.

| Göttingen Mean Time of Declination Obs. | | | Declination. | Bifilar. | | Balance. | | Observer's Initial. |
|---|---|---|---|---|---|---|---|---|
| | | | | Corrected. | Thermometer. | Corrected. | Thermometer. | |
| d. | h. | m. | ° ′ | Sc. Div. | ° | Mic. Div. | ° | |
| 13 | 5 | 0 | 25 14·73 | 541·1 | 31·9 | 594·3 | 32·3 | B |
| | 6 | 0 | 14·23 | 541·7 | 31·8 | 592·1 | 32·1 | W |
| | 7 | 0 | 14·20 | 540·2 | 31·7 | 591·3 | 32·1 | W |
| | 8 | 0 | 13·79 | 539·6 | 31·7 | 590·4 | 32·0 | W |
| | 9 | 0 | 13·63 | 539·5 | 31·7 | 589·4 | 32·0 | W |
| | 10 | 0 | 13·32 | 539·2 | 31·7 | 589·2 | 32·0 | W |
| | 11 | 0 | 13·91 | 539·2 | 31·8 | 589·6 | 32·1 | H |
| | 12 | 0 | 13·63 | 539·7 | 31·8 | 590·0 | 32·3 | H |
| | 13 | 0 | 25 13·79 | 539·7 | 31·8 | 589·6 | 32·4 | H |
| | 14 | 0 | 14·23 | 539·8 | 31·9 | 588·4 | 32·4 | H |
| | 15 | 0 | 14·51 | 540·4 | 32·0 | 588·7 | 32·5 | H |
| | 16 | 0 | 14·98 | 541·1 | 32·0 | 588·8 | 32·7 | H |
| | 17 | 0 | 14·38 | 541·6 | 32·1 | 588·4 | 32·8 | H |
| | 18 | 0 | 14·37 | 542·2 | 32·3 | 588·7 | 33·0 | H |
| | 19 | 0 | 14·20 | 543·1 | 32·4 | 588·6 | 33·2 | W |
| | 20 | 0 | 13·79 | 545·7 | 32·6 | 586·2 | 33·4 | W |
| | 21 | 0 | 13·39 | 545·9 | 32·8 | 583·1 | 33·5 | B |
| | 22 | 0 | 13·84 | 546·0 | 32·9 | 580·5 | 33·6 | W |
| | 23 | 0 | 14·92 | 543·4 | 33·0 | 575·1 | 33·8 | W |
| 14 | 0 | 0 | 15·92 | 544·2 | 33·1 | 575·6 | 33·9 | W |
| | 1 | 0 | 17·37 | 542·5 | 33·2 | 573·8 | 34·0 | W |
| | 2 | 0 | 20·53 | 540·7 | 33·4 | 575·0 | 34·2 | W |
| | 3 | 0 | 15·72 | 539·6 | 33·6 | 579·4 | 34·3 | W |
| | 4 | 0 | 15·64 | 544·9 | 33·7 | 587·0 | 34·5 | W |
| | 5 | 0 | 19·10 | 547·5 | 33·8 | 586·2 | 34·5 | W |
| | 6 | 0† | 15·20 | 518·8 | 33·9 | 632·1 | 34·6 | W |
| | 7 | 0† | 09·69 | 521·1 | 34·0 | 804·8 | 34·9 | W |
| | 8 | 0† | 13·88 | 517·4 | 34·2 | 649·5 | 35·2 | W |
| | 9 | 0 | 11·37 | 532·5 | 34·4 | 719·4 | 35·5 | H |
| | 10 | 0 | 14·50 | 531·5 | 34·5 | 687·3 | 35·5 | H |
| | 11 | 3 | 13·64 | 527·3 | 34·6 | 654·2 | 35·4 | B |
| | 12 | 0 | 12·73 | 526·3 | 34·7 | 631·2 | 35·3 | B |
| 15 | 13 | 0 | 25 11·98 | 531·9 | 34·4 | 607·3 | 34·6 | W |
| | 14 | 0† | 18·30 | 535·3 | 34·3 | 603·5 | 34·6 | W |
| | 15 | 0 | 16·03 | 532·9 | 34·3 | 593·8 | 34·6 | W |
| | 16 | 0 | 14·49 | 536·6 | 34·3 | 587·9 | 34·6 | W |
| | 17 | 0 | 13·60 | 532·9 | 34·3 | 592·0 | 34·6 | W |
| | 18 | 0 | 14·60 | 533·9 | 34·2 | 599·5 | 34·6 | W |
| | 19 | 0 | 15·56 | 531·7 | 34·3 | 606·0 | 34·7 | B |
| | 20 | 0 | 14·55 | 538·7 | 34·3 | 607·6 | 34·7 | B |
| | 21 | 0 | 14·99 | 535·2 | 34·3 | 609·1 | 34·7 | H |
| | 22 | 0 | 14·60 | 532·2 | 34·3 | 605·7 | 34·8 | H |
| | 23 | 0 | 14·58 | 529·7 | 34·4 | 607·2 | 35·0 | H |
| 16 | 0 | 0 | 16·68 | 535·1 | 34·5 | 609·7 | 35·2 | H |
| | 1 | 0 | 15·91 | 535·1 | 34·7 | 611·0 | 35·4 | H |
| | 2 | 0 | 16·55 | 534·8 | 34·8 | 609·8 | 35·5 | B |
| | 3 | 0 | 15·83 | 538·5 | 35·0 | 615·7 | 35·6 | B |
| | 4 | 0 | 15·54 | 538·8 | 35·1 | 620·1 | 35·7 | H |
| | 5 | 0† | 04·78 | 511·5 | 35·1 | 650·8 | 35·9 | B |
| | 6 | 0 | 14·23 | 528·6 | 35·2 | 651·0 | 36·2 | W |
| | 7 | 0 | 17·29 | 532·6 | 35·4 | 635·0 | 36·3 | W |
| | 8 | 0 | 13·66 | 536·6 | 35·6 | 626·4 | 36·3 | W |
| | 9 | 0 | 09·15 | 538·4 | 35·6 | 622·6 | 36·3 | W |
| | 10 | 0 | 09·03 | 542·3 | 35·7 | 612·5 | 36·3 | W |
| | 11 | 0 | 11·98 | 532·0 | 35·7 | 608·8 | 36·3 | H |
| | 12 | 0 | 11·74 | 532·8 | 35·8 | 605·1 | 36·4 | H |

| Göttingen Mean Time of Declination Obs. | | | Declination. | Bifilar. | | Balance. | | Observer's Initial. |
|---|---|---|---|---|---|---|---|---|
| | | | | Corrected. | Thermometer. | Corrected. | Thermometer. | |
| d. | h. | m. | ° ′ | Sc. Div. | ° | Mic. Div. | ° | |
| 16 | 13 | 0 | 25 15·56 | 539·3 | 35·8 | 587·3 | 36·5 | H |
| | 14 | 0 | 13·83 | 534·7 | 35·9 | 588·5 | 36·5 | H |
| | 15 | 0 | 13·70 | 533·7 | 36·0 | 597·6 | 36·6 | H |
| | 16 | 0 | 15·01 | 534·4 | 36·1 | 600·9 | 36·7 | H |
| | 17 | 0 | 14·80 | 535·5 | 36·2 | 603.8 | 36·8 | H |
| | 18 | 0 | 15·38 | 537·1 | 36·2 | 605·3 | 37·0 | H |
| | 19 | 0 | 15·09 | 539·2 | 36·3 | 603·0 | 37·0 | W |
| | 20 | 0 | 15·34 | 536·0 | 36·4 | 604·1 | 37·0 | W |
| | 21 | 0 | 15·07 | 537·1 | 36·5 | 604·6 | 37·1 | B |
| | 22 | 0 | 14·26 | 536·5 | 36·6 | 606·2 | 37·1 | W |
| | 23 | 0 | 14·43 | 532·3 | 36·6 | 605·4 | 37·1 | W |
| 17 | 0 | 0 | 14·98 | 534·6 | 36·7 | 605·2 | 37·2 | W |
| | 1 | 0 | 16·15 | 534·4 | 36·8 | 608·9 | 37·3 | W |
| | 2 | 0 | 16·48 | 534·5 | 36·9 | 609·4 | 37·5 | W |
| | 3 | 0 | 15·78 | 533·9 | 37·1 | 607·7 | 37·7 | W |
| | 4 | 0 | 14·64 | 534·6 | 37·3 | 611·1 | 38·0 | W |
| | 5 | 0 | 13·19 | 533·9 | 37·4 | 611·7 | 38·1 | W |
| | 6 | 0 | 14·30 | 539·8 | 37·6 | 607·5 | 38·2 | H |
| | 7 | 0 | 14·67 | 536·9 | 37·7 | 606·9 | 38·4 | H |
| | 8 | 0 | 11·57 | 539·0 | 37·8 | 607·1 | 38·5 | H |
| | 9 | 0 | 13·14 | 539·2 | 37·8 | 604·7 | 38·5 | H |
| | 10 | 0 | 13·64 | 538·5 | 37·8 | 603·1 | 38·5 | H |
| | 11 | 0 | 13·46 | 537·6 | 37·9 | 599·8 | 38·5 | B |
| | 12 | 0 | 13·69 | 537·9 | 37·9 | 598·1 | 38·5 | B |
| | 13 | 0 | 25 13·76 | 537·5 | 37·9 | 597·6 | 38·5 | B |
| | 14 | 0 | 14·13 | 537·6 | 37·9 | 596·7 | 38·5 | B |
| | 15 | 0 | 14·13 | 537·8 | 37·9 | 596·2 | 38·5 | B |
| | 16 | 0 | 14·28 | 538·8 | 37·9 | 595·5 | 38·5 | B |
| | 17 | 0 | 16·79 | 542·5 | 37·9 | 589·9 | 38·5 | B |
| | 18 | 0 | 12·38 | 539·6 | 37·9 | 586·8 | 38·5 | B |
| | 19 | 0 | 13·39 | 539·8 | 37·9 | 586·7 | 38·5 | H |
| | 20 | 0 | 15·12 | 544·7 | 37·9 | 586·2 | 38·5 | H |
| | 21 | 0 | 14·40 | 536·1 | 38·0 | 592·5 | 38·6 | W |
| | 22 | 0 | 15·07 | 537·8 | 38·0 | 594·4 | 38·6 | H |
| | 23 | 0 | 14·53 | 535·2 | 38·1 | 593·6 | 38·6 | H |
| 18 | 0 | 0 | 15·89 | 535·2 | 38·1 | 591·6 | 38·6 | H |
| | 1 | 0 | 16·21 | 336·5 | 38·2 | 594·2 | 38·7 | H |
| | 2 | 0 | 16·46 | 538·5 | 38·3 | 595·5 | 38·8 | H |
| | 3 | 0 | 15·38 | 537·6 | 38·4 | 595·1 | 38·8 | H |
| | 4 | 0 | 14·84 | 538·4 | 38·5 | 594·4 | 38·9 | H |
| | 5 | 0 | 14·01 | 540·2 | 38·6 | 596·6 | 39·0 | H |
| | 6 | 0 | 14·18 | 539·5 | 38·7 | 599·0 | 39·2 | B |
| | 7 | 0 | 14·44 | 538·1 | 38·7 | 598·7 | 39·2 | B |
| | 8 | 0 | 14·46 | 538·1 | 38·7 | 599·9 | 39·0 | B |
| | 9 | 0 | 14·15 | 539·7 | 38·6 | 599·6 | 39·0 | B |
| | 10 | 0 | 14·01 | 540·5 | 38·5 | 595·6 | 39·0 | H |
| | 11 | 0 | 12·25 | 537·8 | 38·5 | 603·8 | 39·2 | H |
| | 12 | 0 | 08·14 | 552·6 | 38·5 | 592·4 | 39·3 | H |
| | 13 | 0 | 25 10·48 | 535·0 | 38·6 | 586·7 | 39·5 | D |
| | 14 | 0 | 13·91 | 538·0 | 38·7 | 582·8 | 39·9 | D |
| | 15 | 0 | 14·53 | 537·8 | 38·8 | 583·8 | 40·0 | D |
| | 16 | 0 | 14·67 | 540·8 | 38·9 | 580·7 | 40·0 | D |
| | 17 | 0 | 14·37 | 542·9 | 38·9 | 579·9 | 40·0 | D |
| | 18 | 0 | 13·99 | 543·4 | 38·9 | 579·2 | 40·0 | W |
| | 19 | 0 | 14·03 | 542·3 | 39·0 | 579·9 | 40·0 | W |
| | 20 | 0 | 14·37 | 542·7 | 39·0 | 580·3 | 40·0 | W |

DECLINATION. Magnet untouched, Nov. 11d—Dec. 25d.

BIFILAR. Observed 2m after the Declination, $k=0{\cdot}000140$. BALANCE. Observed 3m after the Declination, $k=0{\cdot}0000085$.

† Extra Observations made.

| Göttingen Mean Time of Declination Obs. | Declination. | Bifilar. | | Balance. | | Observer's Initial. |
|---|---|---|---|---|---|---|
| | | Corrected. | Thermometer. | Corrected. | Thermometer. | |
| d. h. m. | ° ′ | Sc. Div. | ° | Mic. Div. | ° | |
| 18 21 0 | 25 19·22 | 533·4 | 39·0 | 582·5 | 40·0 | W |
| 22 0 | 22·01 | 543·2 | 39·0 | 573·3 | 39·9 | B |
| 23 0 | 18·34 | 533·1 | 38·8 | 577·1 | 39·6 | H |
| 19 0 0 | 16·45 | 530·3 | 38·7 | 585·3 | 39·4 | B |
| 1 0 | 16·23 | 537·2 | 38·7 | 591·6 | 39·2 | H |
| 2 0 | 18·07 | 536·3 | 38·6 | 595·0 | 39·1 | H |
| 3 0 | 16·45 | 535·3 | 38·7 | 598·3 | 39·4 | H |
| 4 0 | 17·24 | 520·1 | 38·9 | 617·5 | 39·7 | B |
| 5 0 | 12·80 | 530·6 | 39·0 | 627·2 | 39·8 | B |
| 6 0 | 15·09 | 535·0 | 39·1 | 627·1 | 40·0 | D |
| 7 0 | 16·10 | 535·7 | 39·1 | 618·4 | 40·0 | D |
| 8 0 | 14·41 | 535·9 | 39·0 | 608·6 | 40·0 | W |
| 9 0 | 12·72 | 532·9 | 39·0 | 600·1 | 39·8 | W |
| 10 0 | 11·71 | 528·6 | 38·8 | 597·7 | 39·4 | W |
| 11 0 | 02·52 | 526·8 | 38·6 | 599·4 | 38·8 | H |
| 12 0 | 07·29 | 533·4 | 38·2 | 585·5 | 38·2 | H |
| 13 0 | 25 13·17 | 536·2 | 37·8 | 575·7 | 37·7 | H |
| 14 0 | 14·03 | 533·5 | 37·3 | 569·5 | 37·0 | H |
| 15 0 | 14·98 | 534·3 | 36·9 | 577·5 | 36·5 | H |
| 16 0 | 15·58 | 531·3 | 36·4 | 582·9 | 36·0 | H |
| 17 0 | 12·83 | 534·4 | 36·0 | 578·3 | 35·5 | H |
| 18 0 | 12·22 | 534·9 | 35·6 | 578·6 | 35·0 | H |
| 19 0 | 13·16 | 537·9 | 35·2 | 586·3 | 34·6 | W |
| 20 0 | 14·48 | 543·3 | 34·8 | 590·3 | 34·2 | W |
| 21 0 | 13·56 | 533·9 | 34·4 | 597·8 | 33·7 | B |
| 22 0 | 13·44 | 533·9 | 34·0 | 596·8 | 33·1 | W |
| 23 0 | 15·42 | 530·7 | 33·6 | 597·9 | 32·6 | W |
| 20 0 0 | 18·72 | 531·5 | 33·1 | 598·7 | 32·4 | W |
| 1 0 | 21·76 | 522·0 | 33·0 | 611·9 | 32·4 | W |
| 2 0 | 18·41 | 534·5 | 32·9 | 610·8 | 32·4 | W |
| 3 0† | 25 23·92 | 535·8 | 32·9 | 630·2 | 32·8 | W |
| 4 0† | 24 53·67 | 547·3 | 33·0 | 677·6 | 33·2 | W |
| 5 0 | 25 11·68 | 528·1 | 33·1 | 663·6 | 33·6 | W |
| 6 0 | 25 15·58 | 531·4 | 33·2 | 642·0 | 33·5 | H |
| 7 0 | 25 15·81 | 535·2 | 33·2 | 632·2 | 33·4 | H |
| 8 0 | 25 10·40 | 525·6 | 33·1 | 632·6 | 33·2 | H |
| 9 0† | 24 51·09 | 567·4 | 33·0 | 600·8 | 33·0 | H |
| 10 0† | 25 06·73 | 523·2 | 32·8 | 591·4 | 32·7 | H |
| 11 0 | 12·04 | 530·8 | 32·5 | 601·9 | 32·5 | B |
| 12 0 | 09·94 | 537·3 | 32·3 | 593·6 | 32·3 | B |
| 13 0† | 25 11·21 | 545·5 | 32·0 | 543·4 | 32·0 | B |
| 14 0† | 17·60 | 534·9 | 31·8 | 552·4 | 31·8 | B |
| 15 0† | 11·72 | 528·5 | 31·7 | 552·3 | 31·7 | B |
| 16 0 | 15·47 | 537·2 | 31·4 | 555·2 | 31·4 | B |
| 17 0 | 15·17 | 535·4 | 31·2 | 558·4 | 31·0 | B |
| 18 0† | 19·84 | 535·9 | 30·9 | 563·9 | 30·7 | B |
| 19 0† | 19·32 | 542·4 | 30·8 | 549·5 | 30·6 | H |
| 20 0† | 15·51 | 538·2 | 30·7 | 578·7 | 30·6 | H |
| 21 0 | 14·75 | 534·7 | 30·6 | 591·0 | 30·6 | W |
| 22 0 | 15·98 | 533·1 | 30·5 | 595·3 | 30·5 | H |
| 23 0 | 17·12 | 522·6 | 30·4 | 599·8 | 30·5 | H |
| 21 0 0 | 19·42 | 521·9 | 30·3 | 608·6 | 30·4 | H |
| 1 0 | 21·37 | 535·0 | 30·2 | 612·9 | 30·4 | H |
| 2 0 | 17·94 | 533·8 | 30·2 | 619·4 | 30·5 | H |
| 3 0 | 16·10 | 527·6 | 30·4 | 634·4 | 30·6 | H |
| 4 0† | 01·14 | 521·0 | 30·6 | 672·9 | 30·7 | H |

| Göttingen Mean Time of Declination Obs. | Declination. | Bifilar. | | Balance. | | Observer's Initial. |
|---|---|---|---|---|---|---|
| | | Corrected. | Thermometer. | Corrected. | Thermometer. | |
| d. h. m. | ° ′ | Sc. Div. | ° | Mic. Div. | ° | |
| 21 5 0† | 25 19·37 | 526·0 | 30·8 | 668·4 | 31·2 | H |
| 6 0† | 14·71 | 528·2 | 30·9 | 656·9 | 31·8 | B |
| 7 0 | 15·27 | 531·2 | 31·2 | 640·3 | 32·2 | B |
| 8 0 | 15·01 | 532·5 | 31·5 | 631·6 | 32·4 | B |
| 9 0 | 13·46 | 531·7 | 31·7 | 626·4 | 32·4 | B |
| 10 0 | 14·04 | 536·3 | 31·7 | 617·7 | 32·3 | B |
| 11 0 | 18·68 | 537·4 | 31·7 | 598·7 | 32·4 | W |
| 12 0 | 11·37 | 535·8 | 31·8 | 593·2 | 32·5 | W |
| 22 13 0 | 25 13·14 | 531·8 | 33·6 | 578·9 | 34·3 | H |
| 14 0 | 14·43 | 536·9 | 33·7 | 587·7 | 34·3 | H |
| 15 0 | 13·30 | 536·0 | 33·8 | 595·2 | 34·5 | H |
| 16 0 | 14·51 | 538·2 | 33·9 | 593·9 | 34·6 | H |
| 17 0 | 13·29 | 539·2 | 34·0 | 594·0 | 34·7 | H |
| 18 0 | 14·24 | 538·1 | 34·1 | 594·8 | 34·8 | H |
| 19 0 | 14·70 | 539·4 | 34·1 | 594·5 | 34·8 | W |
| 20 0 | 13·86 | 539·2 | 34·2 | 592·7 | 34·8 | W |
| 21 0 | 13·90 | 541·1 | 34·3 | 592·7 | 34·8 | B |
| 22 0 | 13·47 | 536·8 | 34·3 | 596·2 | 34·9 | W |
| 23 0 | 14·44 | 535·8 | 34·3 | 598·0 | 34·9 | W |
| 23 0 0 | 15·34 | 536·3 | 34·4 | 597·8 | 35·0 | H |
| 1 0 | 17·87 | 538·0 | 34·5 | 598·5 | 35·0 | W |
| 2 0 | 16·36 | 536·7 | 34·6 | 602·0 | 35·1 | W |
| 3 0 | 15·38 | 536·1 | 34·7 | 605·2 | 35·2 | W |
| 4 0 | 16·46 | 536·1 | 34·8 | 605·1 | 35·3 | W |
| 5 0 | 15·04 | 536·8 | 34·8 | 603·0 | 35·4 | W |
| 6 0 | 15·25 | 536·7 | 34·9 | 602·2 | 35·4 | W |
| 7 0 | 12·51 | 536·4 | 35·0 | 601·3 | 35·5 | W |
| 8 0 | 14·03 | 538·3 | 35·0 | 595·9 | 35·5 | H |
| 9 0 | 13·19 | 538·4 | 35·0 | 593·6 | 35·5 | H |
| 10 0 | 13·47 | 537·4 | 35·0 | 598·2 | 35·6 | H |
| 11 0 | 13·05 | 537·0 | 35·0 | 598·4 | 35·6 | B |
| 12 0 | 11·21 | 535·0 | 35·0 | 601·7 | 35·6 | B |
| 13 0 | 25 15·52 | 539·0 | 35·0 | 594·8 | 35·5 | B |
| 14 0 | 13·09 | 537·0 | 34·9 | 592·2 | 35·5 | B |
| 15 0 | 15·14 | 537·1 | 34·9 | 589·3 | 35·5 | B |
| 16 0 | 13·93 | 538·8 | 34·9 | 587·8 | 35·5 | B |
| 17 0 | 13·29 | 539·1 | 34·9 | 588·9 | 35·5 | B |
| 18 0 | 14·51 | 539·2 | 34·9 | 591·0 | 35·5 | B |
| 19 0 | 13·56 | 542·4 | 34·9 | 585·1 | 35·4 | H |
| 20 0 | 13·91 | 540·2 | 34·9 | 590·7 | 35·4 | H |
| 21 0 | 13·66 | 538·9 | 34·9 | 593·2 | 35·4 | W |
| 22 0 | 13·32 | 539·5 | 34·9 | 594·0 | 35·4 | H |
| 23 0 | 13·63 | 535·9 | 34·9 | 592·8 | 35·4 | H |
| 24 0 0 | 15·22 | 536·5 | 34·9 | 592·8 | 35·4 | H |
| 1 0 | 16·18 | 537·9 | 34·9 | 595·7 | 35·4 | H |
| 2 0 | 15·78 | 537·4 | 34·8 | 595·7 | 35·4 | H |
| 3 0 | 15·04 | 538·9 | 34·8 | 594·6 | 35·3 | H |
| 4 0 | 14·23 | 539·4 | 34·8 | 596·8 | 35·3 | H |
| 5 0 | 14·53 | 538·9 | 34·8 | 598·4 | 35·3 | H |
| 6 0 | 13·19 | 537·9 | 34·8 | 595·3 | 35·1 | B |
| 7 0 | 12·69 | 541·2 | 34·7 | 594·1 | 35·0 | B |
| 8 0 | 14·20 | 538·6 | 34·7 | 592·0 | 34·9 | B |
| 9 0 | 13·09 | 537·2 | 34·6 | 595·0 | 34·8 | B |
| 10 0 | 11·88 | 538·1 | 34·5 | 597·6 | 34·7 | B |
| 11 0 | 11·34 | 534·5 | 34·4 | 600·7 | 34·6 | W |
| 12 0 | 12·69 | 534·9 | 34·2 | 584·8 | 34·5 | W |

DECLINATION. Magnet untouched, Nov. 11d—Dec. 25d.

BIFILAR. Observed 2m after the Declination, $k=0{\cdot}000140$. BALANCE. Observed 3m after the Declination, $k=0{\cdot}0000085$.

† Extra Observations made.

| Göttingen Mean Time of Declination Obs. | | | Declination. | Bifilar. | | Balance. | | Observer's Initial. | Göttingen Mean Time of Declination Obs. | | | Declination. | Bifilar. | | Balance. | | Observer's Initial. |
|---|---|---|---|---|---|---|---|---|---|---|---|---|---|---|---|---|---|
| | | | | Corrected. | Thermometer. | Corrected. | Thermometer. | | | | | | Corrected. | Thermometer. | Corrected. | Thermometer. | |
| d. | h. | m. | ° ′ | Sc. Div. | ° | Mic. Div. | ° | | d. | h. | m. | ° ′ | Sc. Div. | ° | Mic. Div. | | |
| 24 | 13 | 0 | 25 12·60 | 536·5 | 34·1 | 588·4 | 34·4 | W | 26 | 21 | 0 | 25 13·70 | 541·2 | 33·9 | 576·5 | 34·5 | W |
| | 14 | 0 | 13·32 | 537·1 | 34·0 | 590·6 | 34·3 | W | | 22 | 0 | 15·07 | 543·1 | 34·0 | 576·6 | 34·5 | H |
| | 15 | 0 | 14·26 | 537·3 | 34·0 | 591·1 | 34·2 | W | | 23 | 0 | 14·98 | 541·8 | 34·0 | 579·2 | 34·5 | H |
| | 16 | 0 | 14·23 | 539·6 | 33·9 | 591·5 | 34·1 | W | 27 | 0 | 0 | 16·57 | 540·5 | 34·1 | 582·6 | 34·5 | H |
| | 17 | 0 | 14·11 | 540·9 | 33·8 | 590·8 | 34·0 | W | | 1 | 0 | 15·67 | 542·9 | 34·2 | 583·7 | 34·8 | H |
| | 18 | 0 | 14·23 | 541·8 | 33·8 | 590·3 | 34·0 | W | | 2 | 0 | 15·38 | 543·9 | 34·3 | 585·7 | 35·0 | H |
| | 19 | 0 | 14·17 | 541·9 | 33·8 | 589·6 | 34·0 | B | | 3 | 0 | 15·59 | 541·0 | 34·4 | 593·8 | 35·0 | H |
| | 20 | 0 | 13·77 | 541·1 | 33·7 | 590·1 | 34·0 | B | | 4 | 0 | 13·79 | 539·8 | 34·7 | 593·7 | 35·1 | H |
| | 21 | 0 | 13·70 | 540·4 | 33·7 | 590·6 | 34·0 | H | | 5 | 0 | 13·81 | 540·3 | 34·7 | 595·5 | 35·2 | H |
| | 22 | 0 | 13·66 | 537·5 | 33·7 | 594·4 | 34·0 | H | | 6 | 0 | 13·79 | 540·8 | 34·8 | 593·2 | 35·3 | B |
| | 23 | 0 | 14·53 | 536·8 | 33·6 | 594·5 | 34·0 | H | | 7 | 0 | 13·77 | 540·7 | 34·8 | 593·1 | 35·3 | B |
| 25 | 0 | 0 | 15·54 | 537·2 | 33·7 | 592·6 | 33·9 | B | | 8 | 0 | 13·12 | 538·6 | 34·7 | 593·9 | 35·2 | B |
| | 1 | 0 | 16·52 | 540·3 | 33·6 | 591·4 | 33·8 | H | | 9 | 0 | 11·96 | 535·5 | 34·7 | 595·7 | 35·1 | B |
| | 2 | 0 | 15·54 | 541·4 | 33·6 | 595·4 | 33·8 | B | | 10 | 0† | 15·25 | 530·8 | 34·6 | 601·6 | 34·9 | B |
| | 3 | 0 | 15·14 | 540·4 | 33·6 | 596·6 | 33·8 | H | | 11 | 0 | 13·64 | 531·3 | 34·4 | 600·8 | 34·6 | W |
| | 4 | 0 | 14·37 | 540·4 | 33·5 | 596·1 | 33·8 | H | | 12 | 0† | 08·65 | 535·6 | 34·2 | 600·2 | 34·4 | W |
| | 5 | 0 | 13·97 | 540·0 | 33·5 | 596·2 | 33·9 | B | | | | | | | | | |
| | 6 | 0 | 14·70 | 540·0 | 33·5 | 594·4 | 33·9 | W | | 13 | 0† | 25 06·09 | 520·4 | 34·0 | 604·0 | 34·3 | W |
| | 7 | 0 | 15·27 | 538·2 | 33·5 | 594·5 | 33·8 | H | | 14 | 0† | 03·60 | 527·4 | 33·9 | 599·7 | 34·2 | W |
| | 8 | 0 | 15·14 | 535·1 | 33·4 | 597·8 | 33·8 | H | | 15 | 0 | 07·04 | 535·0 | 33·8 | 600·6 | 34·1 | W |
| | 9 | 0 | 11·84 | 533·7 | 33·4 | 604·1 | 33·8 | H | | 16 | 0 | 10·41 | 535·4 | 33·7 | 599·6 | 33·9 | W |
| | 10 | 0 | 11·34 | 532·6 | 33·4 | 603·9 | 33·8 | W | | 17 | 0 | 12·89 | 538·1 | 33·5 | 595·0 | 33·6 | W |
| | 11 | 0 | 12·38 | 538·5 | 33·4 | 598·6 | 33·8 | H | | 18 | 0 | 12·58 | 538·0 | 33·3 | 593·2 | 33·4 | W |
| | 12 | 0 | 12·85 | 537·9 | 33·3 | 596·2 | 33·7 | H | | 19 | 0 | 14·78 | 536·5 | 33·1 | 593·7 | 33·2 | B |
| | | | | | | | | | | 20 | 0 | 13·74 | 536·4 | 32·9 | 593·1 | 33·1 | B |
| | 13 | 0 | 25 13·41 | 538·0 | 33·2 | 595·9 | 33·7 | H | | 21 | 0 | 13·76 | 537·0 | 32·8 | 590·7 | 32·8 | H |
| | 14 | 0 | 13·63 | 539·7 | 33·2 | 595·0 | 33·6 | H | | 22 | 0 | 14·53 | 536·5 | 32·7 | 587·5 | 32·5 | H |
| | 15 | 0 | 13·79 | 538·1 | 33·2 | 593·3 | 33·5 | H | | 23 | 0 | 14·78 | 537·7 | 32·5 | 588·1 | 32·4 | H |
| | 16 | 0 | 14·44 | 540·5 | 33·1 | 584·2 | 33·4 | H | 28 | 0 | 0 | 16·92 | 539·5 | 32·3 | 593·6 | 32·4 | B |
| | 17 | 0 | 12·49 | 543·8 | 33·0 | 578·5 | 33·3 | H | | 1 | 0 | 16·57 | 533·0 | 32·2 | 596·6 | 32·4 | H |
| | 18 | 0 | 13·86 | 543·0 | 33·0 | 579·3 | 33·2 | H | | 2 | 0 | 15·65 | 532·8 | 32·1 | 603·5 | 32·3 | B |
| | 19 | 0 | 13·72 | 545·3 | 32·9 | 581·7 | 33·1 | W | | 3 | 0 | 15·38 | 536·6 | 32·1 | 608·7 | 32·4 | H |
| | 20 | 0 | 13·94 | 543·6 | 32·9 | 583·4 | 33·1 | W | | 4 | 0 | 14·70 | 539·4 | 32·1 | 605·6 | 32·5 | H |
| | 21 | 0 | 14·94 | 544·6 | 32·9 | 582·2 | 33·1 | B | | 5 | 0 | 14·87 | 538·3 | 32·1 | 605·8 | 32·5 | B |
| | 22 | 0 | 15·61 | 539·0 | 32·8 | 584·4 | 33·1 | W | | 6 | 0 | 13·59 | 540·5 | 32·1 | 605·2 | 32·7 | W |
| | 23 | 0 | 16·01 | 538·3 | 32·8 | 587·1 | 33·1 | W | | 7 | 0 | 13·00 | 539·5 | 32·1 | 603·3 | 32·7 | W |
| 26 | 0 | 0 | 15·72 | 530·2 | 32·8 | 589·6 | 33·1 | W | | 8 | 0 | 13·86 | 538·9 | 32·2 | 603·8 | 32·8 | W |
| | 1 | 0 | 17·57 | 535·8 | 32·8 | 593·8 | 33·1 | W | | 9 | 0 | 13·19 | 538·9 | 32·3 | 602·6 | 32·8 | W |
| | 2 | 0 | 16·90 | 538·4 | 32·9 | 597·2 | 33·2 | W | | 10 | 0 | 13·17 | 534·3 | 32·3 | 603·7 | 32·8 | W |
| | 3 | 0 | 14·36 | 538·4 | 33·0 | 603·3 | 33·3 | W | | 11 | 0 | 12·43 | 538·2 | 32·4 | 602·9 | 32·8 | H |
| | 4 | 0 | 13·35 | 539·0 | 33·0 | 601·6 | 33·4 | W | | 12 | 0 | 11·66 | 538·3 | 32·5 | 602·7 | 33·0 | H |
| | 5 | 0 | 13·23 | 545·0 | 33·1 | 599·4 | 33·6 | W | | | | | | | | | |
| | 6 | 0 | 14·46 | 539·8 | 33·2 | 598·3 | 33·7 | H | 29 | 13 | 0† | 25 15·72 | 515·1 | 36·2 | 680·3 | 36·6 | H |
| | 7 | 0 | 14·98 | 541·1 | 33·4 | 596·2 | 33·9 | H | | 14 | 0† | 24 46·92 | 539·9 | 36·2 | 733·3 | 36·6 | H |
| | 8 | 0† | 11·48 | 529·0 | 33·4 | 621·6 | 34·0 | H | | 15 | 0† | 25 12·72 | 496·4 | 36·1 | 603·6 | 36·6 | H |
| | 9 | 0† | 12·48 | 535·7 | 33·4 | 618·3 | 34·1 | H | | 16 | 0† | 15·91 | 492·9 | 36·1 | 608·7 | 36·6 | H |
| | 10 | 0 | 14·33 | 534·4 | 33·7 | 608·1 | 34·3 | H | | 17 | 0† | 09·15 | 516·0 | 36·1 | 612·1 | 36·6 | H |
| | 11 | 0 | 13·79 | 536·0 | 33·9 | 604·2 | 34·5 | B | | 18 | 0 | 10·67 | 517·6 | 36·1 | 599·6 | 36·6 | H |
| | 12 | 0 | 12·98 | 538·1 | 33·8 | 601·6 | 34·5 | B | | 19 | 0 | 11·48 | 523·5 | 35·9 | 618·7 | 36·6 | B |
| | | | | | | | | | | 20 | 0 | 11·34 | 531·5 | 35·9 | 633·0 | 36·6 | B |
| | 13 | 0 | 25 12·46 | 537·4 | 33·9 | 599·7 | 34·4 | B | | 21 | 0 | 13·39 | 532·7 | 35·9 | 632·8 | 36·5 | B |
| | 14 | 0 | 12·75 | 539·1 | 33·9 | 597·5 | 34·4 | B | | 22 | 0 | 13·19 | 535·4 | 35·8 | 623·8 | 36·3 | W |
| | 15 | 0 | 13·63 | 540·9 | 33·9 | 594·2 | 34·4 | B | | 23 | 0 | 14·82 | 529·7 | 35·7 | 627·9 | 36·2 | W |
| | 16 | 0 | 12·48 | 539·0 | 33·9 | 592·1 | 34·4 | B | 30 | 0 | 0 | 14·20 | 530·0 | 35·8 | 628·7 | 36·2 | W |
| | 17 | 0 | 14·91 | 536·5 | 33·9 | 589·3 | 34·4 | B | | 1 | 0 | 19·27 | 531·7 | 35·9 | 628·3 | 36·4 | W |
| | 18 | 0 | 14·46 | 545·4 | 33·9 | 568·8 | 34·4 | B | | 2 | 0 | 14·14 | 534·9 | 35·9 | 632·0 | 36·6 | W |
| | 19 | 0 | 17·96 | 544·2 | 33·9 | 570·0 | 34·5 | H | | 3 | 0 | 14·97 | 535·1 | 36·1 | 635·6 | 36·8 | W |
| | 20 | 0 | 16·05 | 543·3 | 33·9 | 572·3 | 34·5 | H | | 4 | 0 | 15·85 | 537·7 | 36·4 | 632·9 | 37·0 | W |

DECLINATION. Torsion removed, Dec. 25d 23h, −6½°; 26d 23h, + 55°*; 29d 23h, 0°; 30d 3h, −14°. Effect of + 10° of Torsion = − 0′·84.
BIFILAR. Observed 2m after the Declination, $k$=0·000140. BALANCE. Observed 3m after the Declination, $k$=0·0000085.

† Extra Observations made
Dec. 26d 0h—4h. Magnet with short scale used in the declinometer.
Dec. 26d 22h + Experiments made for the value of the torsion coefficient of the declinometer thread; effect of 90° of torsion = 7′·53.
* Dec. 26d 23h + The large amount of torsion now found was most probably introduced on removing the short scale magnet at 26d 4h + as the fibres then became loose. Comparison with the unifilar before and after removing the torsion gave for its effect − 4′·9, and the effect deduced from the value of the torsion coefficient = − 5′·2. The observations from 26d 4h—23h have been corrected by + 5′·05.
Dec. 30d 0h—3h. Magnet with short scale used in the declinometer.

| Göttingen Mean Time of Declination Obs. | | | Declination. | Bifilar. | | Balance. | | Observer's Initial. | Göttingen Mean Time of Declination Obs. | | | Declination. | Bifilar. | | Balance. | | Observer's Initial. |
|---|---|---|---|---|---|---|---|---|---|---|---|---|---|---|---|---|---|
| | | | | Corrected. | Thermometer. | Corrected. | Thermometer. | | | | | | Corrected. | Thermometer. | Corrected. | Thermometer. | |
| d. | h. | m. | ° ′ | Sc. Div. | ° | Mic. Div. | ° | | d. | h. | m. | ° ′ | Sc. Div. | ° | Mic. Div. | ° | |
| 30 | 5 | 0 | 25 17·49 | 544·9 | 36·7 | 631·8 | 37·4 | B | 30 | 21 | 0 | 25 12·83 | 534·8 | 37·0 | 612·5 | 37·5 | B |
| | 6 | 0 | 18·34 | 531·7 | 36·8 | 648·3 | 37·6 | B | | 22 | 0 | 15·51 | 518·1 | 37·0 | 618·9 | 37·4 | H |
| | 7 | 0† | 17·12 | 522·4 | 36·9 | 710·3 | 37·7 | B | | 23 | 0 | 18·84 | 521·2 | 36·9 | 617·1 | 37·3 | H |
| | 8 | 0† | 06·84 | 557·8 | 37·0 | 620·5 | 37·9 | B | 31 | 0 | 0 | 15·45 | 531·7 | 36·9 | 625·2 | 37·3 | B |
| | 9 | 0† | 06·26 | 538·1 | 37·2 | 614·4 | 38·2 | B | | 1 | 0 | 19·75 | 531·4 | 36·9 | 623·4 | 37·3 | H |
| | 10 | 0 | 07·00 | 532·9 | 37·4 | 621·7 | 38·2 | B | | 2 | 0 | 19·14 | 524·2 | 37·0 | 643·3 | 37·5 | H |
| | 11 | 0 | 08·01 | 524·2 | 37·6 | 617·9 | 38·2 | W | | 3 | 0 | 17·61 | 525·7 | 37·4 | 653·0 | 38·2 | H |
| | 12 | 0 | 11·24 | 520·3 | 37·6 | 586·8 | 38·2 | W | | 4 | 0 | 16·45 | 534·8 | 37·9 | 664·3 | 38·6 | H |
| | | | | | | | | | | 5 | 0 | 14·21 | 537·2 | 38·4 | 662·8 | 39·2 | H |
| | 13 | 0 | 25 10·25 | 522·9 | 37·5 | 558·6 | 38·1 | W | | 6 | 0† | 15·85 | 537·1 | 38·7 | 652·5 | 39·4 | W |
| | 14 | 0 | 14·41 | 526·4 | 37·4 | 583·5 | 38·0 | W | | 7 | 0† | 12·75 | 544·1 | 38·8 | 647·0 | 39·5 | W |
| | 15 | 0 | 11·35 | 528·1 | 37·4 | 599·1 | 37·9 | W | | 8 | 0 | 12·98 | 538·7 | 38·8 | 645·1 | 39·4 | W |
| | 16 | 0 | 12·49 | 524·4 | 37·3 | 606·6 | 37·8 | W | | 9 | 0 | 12·83 | 537·0 | 38·7 | 633·7 | 39·2 | W |
| | 17 | 0 | 16·39 | 531·7 | 37·2 | 598·1 | 37·7 | W | | 10 | 0† | 03·38 | 547·6 | 38·6 | 616·4 | 38·8 | W |
| | 18 | 0 | 15·07 | 539·2 | 37·1 | 599·8 | 37·5 | W | | 11 | 0 | 10·98 | 533·0 | 38·3 | 604·6 | 38·5 | B |
| | 19 | 0 | 12·48 | 536·3 | 37·1 | 608·1 | 37·6 | H | | 12 | 0 | 09·30 | 532·1 | 38·1 | 609·9 | 38·3 | B |
| | 20 | 0 | 12·18 | 534·1 | 37·1 | 611·4 | 37·6 | H | | | | | | | | | |

DECLINATION. Magnet untouched, Dec. 30d—Feb. 5d, 1845.

BIFILAR. Observed 2m after the Declination, $k$=0·000140. BALANCE. Observed 3m after the Declination, $k$=0·0000085.

† Extra Observations made.

# TERM-DAY OBSERVATIONS

OF

# MAGNETOMETERS.

MAKERSTOUN OBSERVATORY,

1844.

| Göttingen Mean Time of Declination Observation. | JANUARY 24, 25. | | | | | | | | | | | |
|---|---|---|---|---|---|---|---|---|---|---|---|---|
| | DECLINATION. | BIFILAR Corrected. | BALANCE Corrected. | DECLINATION. | BIFILAR Corrected. | BALANCE Corrected. | DECLINATION. | BIFILAR Corrected. | BALANCE Corrected. | DECLINATION. | BIFILAR Corrected. | BALANCE Corrected. |
| Min. | ° ′ | Sc. Div. | Mic. Div. | ° ′ | Sc. Div. | Mic. Div. | ° ′ | Sc. Div. | Mic. Div. | ° ′ | Sc. Div. | Mic. Div. |
| | | 10h. | | | 14h. | | | 18h. | | | 22h. | |
| 0 | 25 18·67 | 522·5 | 780·7 | 25 19·32 | 518·3 | 771·8 | 25 22·18 | 524·6 | 623·6 | 25 26·90 | 514·1 | 747·4 |
| 5 | 18·84 | 522·7 | 779·4 | 19·32 | 517·6 | ,, | 21·91 | 522·5 | 621·9 | 27·55 | 513·3 | 749·7 |
| 10 | 19·07 | 523·1 | 781·3 | 18·94 | 520·6 | 769·2 | 21·53 | 522·3 | 623·5 | 27·14 | 512·0 | 752·8 |
| 15 | 18·87 | 520·9 | 782·3 | 19·62 | 526·8 | 765·2 | 22·24 | 522·3 | 628·1 | 27·64 | 512·8 | 748·0 |
| 20 | 18·84 | 521·0 | 780·8 | 21·06 | 528·8 | 762·3 | 23·01 | 521·7 | 632·1 | 27·99 | 511·5 | 755·9 |
| 25 | 18·84 | 521·2 | 783·0 | 22·10 | 527·5 | 760·6 | 23·61 | 520·3 | 635·1 | 28·96 | 510·2 | 759·9 |
| 30 | 18·94 | 521·6 | ,, | 21·73 | 523·1 | 757·5 | 24·42 | 519·5 | 639·4 | 28·60 | 508·4 | 761·8 |
| 35 | 18·90 | 521·0 | 782·3 | 20·72 | 519·6 | 756·3 | 26·10 | 519·5 | 643·5 | 29·10 | 508·9 | 763·1 |
| 40 | 18·84 | 520·8 | ,, | 18·92 | 517·4 | 755·6 | 27·29 | 518·9 | 649·1 | 28·32 | 507·1 | 763·0 |
| 45 | 18·77 | 520·6 | ,, | 19·05 | 515·0 | 755·6 | 28·76 | 520·0 | ,, | 28·92 | 506·5 | 764·8 |
| 50 | 18·74 | 521·6 | ,, | 17·89 | 514·8 | 756·6 | 29·04 | 521·1 | 650·5 | 28·32 | 507·1 | 766·3 |
| 55 | 18·77 | 522·6 | 780·3 | 16·99 | 517·1 | 755·6 | 29·34 | 523·9 | ,, | 28·83 | 507·8 | ,, |
| | | 11h. | | | 15h. | | | 19h. | | | 23h. | |
| 0 | 25 18·18 | 524·0 | 779·2 | 25 16·12 | 517·8 | 754·0 | 25 28·94 | 524·5 | 650·3 | 25 28·92 | 509·0 | 767·7 |
| 5 | 18·38 | 523·7 | ,, | 15·67 | 518·8 | 754·3 | 28·15 | 525·4 | 651·4 | 29·09 | 510·4 | 767·0 |
| 10 | 18·11 | 524·9 | 778·3 | 15·52 | 517·9 | 752·3 | 27·64 | 524·7 | 653·3 | 29·29 | 509·8 | 768·0 |
| 15 | 18·90 | 524·2 | 777·7 | 14·43 | 519·6 | 749·3 | 27·12 | 525·1 | 654·8 | 30·15 | 510·0 | ,, |
| 20 | 19·37 | 522·9 | ,, | 13·63 | 520·1 | 744·8 | 26·63 | 523·4 | 658·8 | 29·54 | 510·4 | 770·6 |
| 25 | 19·04 | 522·0 | 777·1 | 13·34 | 520·2 | 744·6 | 26·27 | 521·6 | 662·9 | 29·73 | 509·7 | 771·8 |
| 30 | 18·95 | 521·2 | ,, | 14·50 | 521·6 | 744·5 | 26·68 | 519·9 | 668·3 | 29·61 | 510·1 | 772·6 |
| 35 | 18·63 | 520·9 | 777·3 | 16·15 | 522·5 | 744·4 | 27·44 | 518·1 | 673·5 | 29·51 | 509·3 | 774·0 |
| 40 | 18·81 | 521·2 | ,, | 17·07 | 523·7 | 742·0 | 27·71 | 518·3 | 677·1 | 29·59 | 510·6 | 774·3 |
| 45 | 19·17 | 522·5 | ,, | 17·68 | 521·9 | 741·3 | 27·84 | 520·5 | 680·6 | 28·65 | 512·0 | 774·2 |
| 50 | 19·26 | 523·0 | ,, | 18·43 | 520·3 | 737·1 | 28·92 | 520·3 | 682·8 | 28·99 | 513·2 | 775·5 |
| 55 | 18·88 | 525·3 | 774·0 | 16·65 | 519·8 | 729·1 | 28·99 | 519·7 | 685·4 | 28·76 | 514·2 | 776·2 |
| | | 12h. | | | 16h. | | | 20h. | | | 0h. | |
| 0 | 25 20·06 | 524·5 | 774·0 | 25 13·44 | 520·5 | 726·1 | 25 28·90 | 518·6 | 686·9 | 25 28·25 | 513·8 | 777·8 |
| 5 | 20·02 | 524·5 | 773·4 | 12·06 | 521·9 | 726·7 | 29·09 | 518·4 | 691·7 | 28·56 | 510·9 | 779·6 |
| 10 | 20·58 | 524·4 | ,, | 13·36 | 517·4 | 732·0 | 29·29 | 517·7 | 694·3 | 27·78 | 513·7 | 780·8 |
| 15 | 19·73 | 522·0 | 773·4 | 13·00 | 514·7 | 729·8 | 29·09 | 516·7 | 697·9 | 28·49 | 515·4 | 782·2 |
| 20 | 18·34 | 521·0 | 775·1 | 12·82 | 515·4 | 726·1 | 29·56 | 515·8 | 703·5 | 28·25 | 515·6 | 783·3 |
| 25 | 18·30 | 520·5 | 775·8 | 14·33 | 516·0 | 725·5 | 29·56 | 514·0 | 706·5 | 28·67 | 515·2 | 784·7 |
| 30 | 18·72 | 522·0 | 776·3 | 16·95 | 515·0 | ,, | 29·24 | 513·5 | 709·2 | 28·87 | 513·1 | 786·3 |
| 35 | 18·92 | 522·3 | ,, | 19·39 | 514·9 | 721·0 | 29·03 | 514·7 | 711·9 | 27·79 | 513·9 | 788·1 |
| 40 | 18·81 | 524·6 | 773·5 | 20·08 | 521·0 | 706·8 | 28·94 | 513·7 | 714·6 | 28·18 | 512·9 | 788·9 |
| 45 | 18·67 | 525·3 | 772·0 | 15·91 | 525·3 | 697·9 | 28·29 | 516·8 | 713·0 | 28·23 | 513·8 | 792·0 |
| 50 | 18·20 | 523·6 | 771·8 | 15·25 | 526·8 | 693·4 | 27·95 | 515·6 | 716·8 | 28·97 | 513·8 | 793·8 |
| 55 | 18·07 | 521·6 | 773·2 | 14·94 | 529·7 | 689·0 | 27·56 | 513·2 | 721·7 | 30·00 | 516·7 | 796·3 |
| | | 13h. | | | 17h. | | | 21h. | | | 1h. | |
| 0 | 25 18·03 | 521·4 | 772·9 | 25 13·59 | 527·8 | 685·4 | 25 27·39 | 513·8 | 719·3 | 25 29·98 | 517·4 | 795·6 |
| 5 | 17·94 | 521·3 | 772·7 | 14·04 | 516·2 | ,, | 27·71 | 514·5 | 725·3 | 30·25 | 514·7 | 797·4 |
| 10 | 17·84 | 520·8 | 772·2 | 15·04 | 506·2 | 688·0 | 27·82 | 516·2 | 726·5 | 30·20 | 516·9 | 798·8 |
| 15 | 17·63 | 519·8 | 772·4 | 16·30 | 495·1 | 691·9 | 27·29 | 514·9 | 728·1 | 31·34 | 519·4 | 802·8 |
| 20 | 17·68 | 520·4 | 772·6 | 17·70 | 494·0 | 696·2 | 26·84 | 514·9 | 729·4 | 31·95 | 515·2 | 803·9 |
| 25 | 17·87 | 521·5 | 772·4 | 20·82 | 500·2 | 694·8 | 26·92 | 515·4 | 731·6 | 31·36 | 515·4 | ,, |
| 30 | 17·56 | 520·7 | 770·3 | 22·50 | 506·6 | 681·0 | 26·88 | 516·9 | 731·4 | 32·35 | 516·0 | 805·4 |
| 35 | 17·81 | 519·6 | 772·3 | 22·91 | 513·2 | 665·6 | 26·87 | 515·4 | 732·0 | 31·79 | 515·3 | 808·6 |
| 40 | 18·14 | 518·5 | ,, | 22·58 | 518·9 | 651·0 | 26·84 | 516·3 | 738·6 | 31·05 | 517·0 | ,, |
| 45 | 18·07 | 517·9 | 773·4 | 22·30 | 523·0 | 641·6 | 26·23 | 516·2 | 738·3 | 31·65 | 515·6 | 811·4 |
| 50 | 18·23 | 518·3 | 772·6 | 22·15 | 525·8 | 634·2 | 26·65 | 515·4 | 742·3 | 30·31 | 514·9 | 814·6 |
| 55 | 19·05 | 518·9 | ,, | 22·33 | 526·3 | 628·7 | 26·88 | 515·3 | 744·5 | 30·29 | 515·4 | 817·2 |

BIFILAR. Observed 2m after the Declination, $k=0{\cdot}000140$. BALANCE. Observed 3m after the Declination, $k=0{\cdot}0000085$.

The temperature of the bifilar and balance magnets, and the observers' initials, will be found at the corresponding hours in the Hourly Observations of Magnetometers.

When double commas (,,) occur in the column for the balance magnetometer, the needle was examined, and no change from the previous observation being appreciable, the micrometers were not altered.

| Göttingen Mean Time of Declination Observation. | JANUARY 24, 25. | | | | | | FEBRUARY 23, 24. | | | | | |
|---|---|---|---|---|---|---|---|---|---|---|---|---|
| | DECLINATION. | BIFILAR Corrected. | BALANCE Corrected. | DECLINATION. | BIFILAR Corrected. | BALANCE Corrected. | DECLINATION. | BIFILAR Corrected. | BALANCE Corrected. | DECLINATION. | BIFILAR Corrected. | BALANCE Corrected. |
| Min. | ° ′ | Sc. Div. | Mic. Div. | ° ′ | Sc. Div. | Mic. Div. | ° ′ | Sc. Div. | Mic. Div. | ° ′ | Sc. Div. | Mic. Div |
| | | 2h. | | | 6h. | | | 10h. | | | 14h. | |
| 0 | 25 30·10 | 514·6 | 820·3 | 25 21·10 | 519·4 | 792·9 | 25 15·96 | 520·1 | 761·8 | 25 16·82 | 523·6 | ,, |
| 5 | 29·56 | 515·4 | 822·2 | 20·90 | 519·3 | 790·4 | 16·41 | 520·6 | 762·5 | 16·99 | 522·6 | 738·4 |
| 10 | 29·01 | 512·6 | 824·4 | 20·87 | 519·6 | 788·8 | 16·75 | 521·6 | 762·1 | 17·40 | 521·8 | ,, |
| 15 | 27·96 | 516·7 | 825·2 | 20·69 | 519·8 | 787·3 | 16·75 | 522·9 | 760·6 | 17·24 | 520·2 | 738·1 |
| 20 | 28·85 | 519·8 | 827·0 | 20·55 | 519·5 | ,, | 17·07 | 522·3 | 759·6 | 16·55 | 519·3 | 739·1 |
| 25 | 29·59 | 518·8 | 833·4 | 20·56 | 519·2 | 790·0 | 16·89 | 521·8 | 758·6 | 16·08 | 520·1 | 739·4 |
| 30 | 28·87 | 519·1 | 829·7 | 20·47 | 519·1 | 788·5 | 16·52 | 520·9 | 757·8 | 15·69 | 521·1 | ,, |
| 35 | 28·97 | 518·9 | 829·9 | 20·55 | 519·2 | 788·5 | 15·88 | 520·5 | 757·2 | 15·99 | 521·1 | 740·9 |
| 40 | 28·29 | 516·5 | ,, | 20·45 | 518·9 | 786·6 | 15·15 | 521·0 | 756·1 | 16·16 | 520·7 | 742·0 |
| 45 | 27·64 | 519·5 | 831·4 | 20·50 | 518·4 | ,, | 14·68 | 521·0 | 755·5 | 16·32 | 520·2 | 742·1 |
| 50 | 28·77 | 522·7 | 836·4 | 20·33 | 518·6 | 787·3 | 14·75 | 520·2 | 754·8 | 16·35 | 519·9 | ,, |
| 55 | 28·89 | 522·8 | 838·5 | 20·25 | 518·9 | 786·2 | 15·01 | 520·0 | 755·2 | 16·28 | 519·5 | ,, |
| | | 3h. | | | 7h. | | | 11h. | | | 15h. | |
| 0 | 25 30·00 | 521·1 | 841·4 | 25 20·32 | 518·6 | ,, | 25 15·12 | 523·7 | 752·6 | 25 16·55 | 519·6 | ,, |
| 5 | 29·50 | 520·1 | 842·2 | 20·90 | 518·8 | 781·7 | 14·84 | 528·0 | 750·2 | 16·63 | 520·5 | ,, |
| 10 | 29·29 | 519·5 | 842·0 | 20·85 | 519·5 | 779·9 | 15·27 | 528·4 | 747·5 | 16·68 | 520·8 | 741·7 |
| 15 | 28·89 | 519·2 | 843·0 | 20·90 | 520·9 | ,, | 15·47 | 524·9 | 747·3 | 16·62 | 520·5 | ,, |
| 20 | 28·29 | 517·0 | 842·0 | 20·89 | 521·8 | 779·1 | 15·44 | 522·3 | 748·4 | 16·66 | 520·4 | 743·1 |
| 25 | 27·55 | 519·3 | 840·5 | 20·82 | 522·2 | ,, | 16·15 | 519·9 | 749·2 | 16·75 | 520·5 | 744·1 |
| 30 | 27·26 | 518·6 | 842·1 | 20·70 | 520·3 | ,, | 16·53 | 522·3 | 747·6 | 17·36 | 521·2 | 742·5 |
| 35 | 28·23 | 514·9 | 842·1 | 20·15 | 519·3 | 778·4 | 16·95 | 525·1 | 745·1 | 17·36 | 522·2 | 741·3 |
| 40 | 27·32 | 515·8 | 839·6 | 19·95 | 519·3 | 778·0 | 17·42 | 527·1 | 743·7 | 17·31 | 522·6 | 743·0 |
| 45 | 26·10 | 517·5 | 838·9 | 19·66 | 517·8 | 779·3 | 17·31 | 527·5 | 740·5 | 17·37 | 522·4 | ,, |
| 50 | 25·54 | 516·9 | 836·2 | 19·91 | 517·1 | 778·9 | 17·00 | 525·7 | 740·0 | 16·77 | 522·2 | ,, |
| 55 | 24·82 | 514·2 | 835·6 | 18·88 | 527·9 | 771·7 | 16·66 | 523·7 | 739·5 | 16·68 | 522·2 | 743·1 |
| | | 4h. | | | 8h. | | | 12h. | | | 16h. | |
| 0 | 25 24·23 | 515·4 | 834·4 | 25 19·15 | 523·0 | 773·6 | 25 16·05 | 523·3 | 739·6 | 25 16·80 | 522·3 | 743·7 |
| 5 | 24·20 | 514·0 | 832·6 | 19·21 | 521·7 | 775·6 | 15·94 | 523·4 | 739·8 | 17·36 | 522·2 | ,, |
| 10 | 23·63 | 519·8 | 830·1 | 19·44 | 521·7 | 773·8 | 16·15 | 523·5 | 740·2 | 17·60 | 522·2 | ,, |
| 15 | 24·22 | 521·5 | 828·6 | 19·10 | 522·0 | ,, | 16·45 | 524·0 | 740·5 | 17·65 | 522·9 | 743·2 |
| 20 | 24·22 | 520·5 | 827·4 | 19·53 | 519·1 | 775·1 | 16·87 | 523·6 | 739·9 | 17·78 | 523·6 | 743·1 |
| 25 | 24·80 | 520·5 | 825·0 | 19·44 | 520·6 | ,, | 17·33 | 522·9 | 739·2 | 18·10 | 523·7 | 742·8 |
| 30 | 24·32 | 520·7 | 822·8 | 19·51 | 520·7 | 773·6 | 17·47 | 522·6 | 738·6 | 18·11 | 523·7 | 742·2 |
| 35 | 24·32 | 520·6 | 821·5 | 19·48 | 520·2 | 772·8 | 16·86 | 520·8 | 737·8 | 17·91 | 522·9 | 741·6 |
| 40 | 24·20 | 520·7 | 818·1 | 19·35 | 519·9 | 773·4 | 16·75 | 520·8 | 739·0 | 17·58 | 523·1 | 743·2 |
| 45 | 23·78 | 523·4 | 814·7 | 19·04 | 520·5 | ,, | 16·65 | 520·8 | 738·6 | 17·54 | 523·7 | 742·4 |
| 50 | 23·24 | 524·5 | 813·3 | 19·08 | 520·3 | 773·7 | 16·23 | 520·9 | 739·5 | 17·49 | 523·4 | ,, |
| 55 | 23·49 | 522·3 | 811·5 | 19·28 | 520·2 | ,, | 16·21 | 529·9 | 739·7 | 17·58 | 523·1 | 741·5 |
| | | 5h. | | | 9h. | | | 13h. | | | 17h. | |
| 0 | 25 23·27 | 521·8 | 809·7 | 25 19·29 | 520·3 | 772·8 | 25 16·32 | 521·0 | 740·0 | 25 17·09 | 523·1 | 741·3 |
| 5 | 22·89 | 521·9 | 808·7 | 19·17 | 519·3 | ,, | 16·35 | 520·8 | 740·1 | 16·70 | 523·4 | 740·9 |
| 10 | 22·30 | 522·9 | 807·9 | 19·37 | 519·3 | 771·6 | 16·80 | 520·8 | 742·3 | 17·07 | 523·5 | 742·5 |
| 15 | 22·17 | 521·7 | 808·0 | 19·42 | 519·6 | ,, | 17·54 | 520·1 | 744·1 | 17·46 | 523·7 | ,, |
| 20 | 22·22 | 521·7 | 807·1 | 19·39 | 519·8 | 769·1 | 17·46 | 520·3 | ,, | 17·49 | 523·6 | 741·5 |
| 25 | 22·22 | 521·5 | 806·4 | 19·51 | 520·0 | ,, | 17·31 | 521·5 | 742·4 | 17·47 | 523·4 | ,, |
| 30 | 22·31 | 519·5 | 804·7 | 19·51 | 519·7 | 768·4 | 17·46 | 522·5 | 741·4 | 17·49 | 523·8 | 740·2 |
| 35 | 22·17 | 518·4 | 802·4 | 19·44 | 519·8 | ,, | 17·63 | 523·6 | 739·8 | 17·60 | 523·8 | ,, |
| 40 | 22·00 | 519·2 | 801·7 | 19·35 | 520·8 | 767·6 | 17·42 | 524·3 | 738·4 | 18·00 | 523·7 | 740·5 |
| 45 | 21·57 | 519·9 | 799·3 | 19·31 | 520·1 | ,, | 16·90 | 524·4 | ,, | 17·58 | 523·8 | ,, |
| 50 | 21·26 | 520·1 | 798·7 | 19·24 | 519·4 | 766·9 | 17·22 | 524·9 | 737·0 | 17·39 | 523·7 | 739·2 |
| 55 | 21·30 | 519·3 | 796·9 | 19·12 | 521·2 | 765·1 | 17·10 | 522·9 | ,, | 17·33 | 523·8 | ,, |

BIFILAR. Observed 2m after the Declination, $k=0{\cdot}000140$. BALANCE. Observed 3m after the Declination, $k=0{\cdot}0000085$.

The temperature of the bifilar and balance magnets, and the observers' initials, will be found at the corresponding hours in the Hourly Observations of Magnetometers.

When double commas (,,) occur in the column for the balance magnetometer, the needle was examined, and no change from the previous observation being appreciable, the micrometers were not altered.

| Göttingen Mean Time of Declination Observation. | February 23, 24. | | | | | | | | | | | |
|---|---|---|---|---|---|---|---|---|---|---|---|---|
| | Declination. | Bifilar Corrected. | Balance Corrected. | Declination. | Bifilar Corrected. | Balance Corrected. | Declination. | Bifilar Corrected. | Balance Corrected. | Declination. | Bifilar Corrected. | Balance Corrected. |
| Min. | ° ′ | Sc. Div. | Mic. Div. | ° ′ | Sc. Div. | Mic. Div. | ° ′ | Sc. Div. | Mic. Div. | ° ′ | Sc. Div. | Mic. Div. |
| | | 18h. | | | 22h. | | | 2h. | | | 6h. | |
| 0 | 25 17·36 | 523·6 | 740·9 | 25 19·31 | 526·9 | 734·1 | 25 20·49 | 528·4 | 734·2 | 25 19·24 | 524·3 | 734·5 |
| 5 | 17·53 | 523·6 | 740·9 | 19·51 | 527·0 | 733·5 | 20·55 | 526·8 | 734·2 | 18·97 | 525·0 | ,, |
| 10 | 17·56 | 523·7 | 739·1 | 19·62 | 526·2 | ,, | 20·09 | 527·3 | 732·7 | 19·05 | 525·4 | 733·9 |
| 15 | 17·60 | 523·8 | ,, | 19·69 | 526·2 | 733·3 | 19·88 | 526·7 | 733·0 | 18·99 | 525·6 | ,, |
| 20 | 17·56 | 524·1 | 738·0 | 20·06 | 525·3 | 733·1 | 19·64 | 526·2 | 732·7 | 18·94 | 526·3 | 733·5 |
| 25 | 17·49 | 524·3 | ,, | 20·02 | 524·5 | ,, | 19·55 | 526·7 | 732·2 | 20·35 | 526·6 | ,, |
| 30 | 17·46 | 523·6 | 737·4 | 19·86 | 525·4 | ,, | 19·51 | 527·1 | 731·8 | 19·02 | 527·3 | 732·9 |
| 35 | 17·49 | 523·4 | ,, | 19·91 | 525·3 | 733·1 | 19·58 | 526·1 | 732·2 | 19·04 | 527·2 | ,, |
| 40 | 17·58 | 523·3 | ,, | 20·11 | 525·7 | ,, | 19·46 | 524·5 | 732·5 | 18·87 | 527·2 | 735·2 |
| 45 | 17·73 | 523·7 | 737·2 | 20·15 | 525·7 | ,, | 18·87 | 525·2 | 732·3 | 18·60 | 527·2 | ,, |
| 50 | 17·56 | 523·8 | ,, | 20·11 | 525·9 | 733·5 | 18·95 | 523·3 | 732·8 | 18·84 | 526·7 | ,, |
| 55 | 17·56 | 523·7 | 739·4 | 20·23 | 526·0 | ,, | 18·77 | 525·8 | 733·3 | 18·79 | 528·2 | 735·1 |
| | | 19h. | | | 23h. | | | 3h. | | | 7h. | |
| 0 | 25 17·49 | 523·4 | 739·0 | 25 20·45 | 527·0 | 733·6 | 25 19·44 | 527·7 | 733·3 | 25 18·65 | 528·3 | 734·3 |
| 5 | 17·56 | 523·2 | ,, | 20·50 | 526·1 | 734·2 | 19·44 | 528·4 | 734·9 | 18·54 | 528·5 | ,, |
| 10 | 17·51 | 523·3 | ,, | 20·23 | 526·4 | ,, | 19·44 | 528·1 | 736·1 | 18·60 | 527·2 | 735·5 |
| 15 | 17·56 | 522·7 | 738·5 | 20·65 | 526·8 | ,, | 19·14 | 528·2 | 736·9 | 18·81 | 525·7 | ,, |
| 20 | 17·56 | 522·6 | ,, | 20·70 | 526·5 | 733·9 | 19·48 | 529·9 | 737·8 | 18·82 | 525·6 | 736·0 |
| 25 | 17·61 | 522·5 | ,, | 20·82 | 527·1 | 733·8 | 19·46 | 529·0 | 738·9 | 18·84 | 526·4 | ,, |
| 30 | 17·80 | 523·2 | ,, | 20·94 | 526·7 | 734·0 | 19·48 | 528·9 | 740·2 | 18·58 | 527·3 | ,, |
| 35 | 17·80 | 523·2 | ,, | 20·90 | 526·0 | 734·1 | 19·55 | 529·0 | 741·5 | 18·41 | 527·5 | 736·5 |
| 40 | 17·73 | 522·9 | 736·5 | 20·99 | 526·6 | 733·4 | 19·46 | 527·6 | 743·0 | 18·60 | 527·7 | 738·8 |
| 45 | 17·83 | 523·5 | ,, | 21·06 | 526·4 | 734·7 | 19·28 | 526·8 | 743·6 | 18·28 | 527·9 | ,, |
| 50 | 18·00 | 523·3 | ,, | 21·10 | 527·1 | 734·2 | 19·04 | 527·5 | 743·6 | 18·25 | 527·6 | 740·2 |
| 55 | 18·13 | 523·3 | ,, | 21·14 | 525·9 | 734·5 | 18·95 | 526·4 | 743·9 | 18·28 | 527·4 | ,, |
| | | 20h. | | | 0h. | | | 4h. | | | 8h. | |
| 0 | 25 18·23 | 522·9 | 735·7 | 25 20·89 | 526·3 | 734·7 | 25 18·99 | 525·3 | 744·0 | 25 18·21 | 527·4 | 740·7 |
| 5 | 18·23 | 521·3 | ,, | 21·23 | 527·0 | ,, | 19·05 | 526·3 | 743·4 | 18·27 | 527·6 | 740·4 |
| 10 | 17·86 | 523·0 | ,, | 21·46 | 527·9 | 734·9 | 19·28 | 525·8 | 744·9 | 18·25 | 527·6 | 740·2 |
| 15 | 17·96 | 524·1 | 735·0 | 21·24 | 525·5 | 735·1 | 19·14 | 526·1 | 744·9 | 18·20 | 527·5 | 740·4 |
| 20 | 18·13 | 523·7 | ,, | 20·85 | 525·8 | 735·4 | 18·90 | 525·7 | 744·4 | 18·10 | 527·5 | 740·4 |
| 25 | 18·10 | 523·3 | 735·3 | 21·14 | 526·7 | ,, | 18·84 | 524·8 | ,, | 18·07 | 527·3 | 740·6 |
| 30 | 18·14 | 523·6 | ,, | 21·12 | 526·2 | 735·6 | 18·99 | 527·1 | 742·8 | 18·00 | 527·4 | ,, |
| 35 | 18·30 | 523·7 | ,, | 20·82 | 526·3 | ,, | 19·21 | 526·6 | 742·6 | 18·11 | 527·3 | 739·9 |
| 40 | 18·50 | 522·7 | ,, | 20·85 | 526·9 | ,, | 19·10 | 524·8 | 743·6 | 18·00 | 527·0 | 739·2 |
| 45 | 18·63 | 523·7 | ,, | 20·72 | 526·8 | 735·0 | 19·31 | 523·6 | 742·8 | 17·94 | 527·0 | 739·3 |
| 50 | 18·57 | 522·8 | 737·9 | 20·97 | 527·3 | 734·9 | 19·19 | 526·7 | ,, | 17·87 | 526·9 | 738·6 |
| 55 | 18·34 | 523·5 | ,, | 20·85 | 527·2 | 735·1 | 19·08 | 521·2 | ,, | 17·93 | 526·8 | 738·6 |
| | | 21h. | | | 1h. | | | 5h. | | | 9h. | |
| 0 | 25 18·57 | 524·6 | 739·7 | 25 20·60 | 527·2 | 734·7 | 25 19·34 | 521·1 | 742·1 | 25 17·70 | 526·3 | 738·2 |
| 5 | 18·84 | 524·4 | ,, | 20·89 | 526·8 | 734·5 | 19·02 | 521·2 | ,, | 17·65 | 526·2 | ,, |
| 10 | 18·84 | 524·2 | 739·3 | 20·56 | 527·2 | 733·7 | 19·05 | 522·7 | 740·0 | 17·60 | 526·4 | ,, |
| 15 | 18·87 | 524·0 | 739·8 | 21·17 | 528·8 | 734·1 | 19·17 | 526·2 | 739·7 | 17·67 | 526·3 | 738·0 |
| 20 | 18·84 | 524·2 | ,, | 21·19 | 527·2 | 734·5 | 19·48 | 526·9 | ,, | 17·49 | 525·7 | 738·9 |
| 25 | 18·74 | 524·9 | 737·4 | 20·25 | 527·6 | 733·5 | 19·55 | 525·0 | 739·6 | 17·53 | 525·7 | 739·8 |
| 30 | 18·81 | 525·4 | ,, | 21·14 | 530·7 | 733·3 | 19·44 | 524·3 | 738·5 | 17·44 | 525·6 | 739·8 |
| 35 | 18·84 | 524·8 | ,, | 20·92 | 528·1 | 734·3 | 19·48 | 524·2 | 737·7 | 17·56 | 525·9 | ,, |
| 40 | 18·74 | 525·4 | 736·9 | 20·80 | 527·9 | 734·5 | 19·49 | 523·6 | 737·6 | 17·73 | 527·2 | 738·5 |
| 45 | 19·32 | 525·9 | 736·8 | 20·83 | 527·2 | 734·6 | 19·51 | 523·5 | ,, | 17·56 | 527·4 | 737·5 |
| 50 | 19·31 | 525·7 | 736·2 | 20·69 | 527·2 | 734·9 | 19·39 | 523·8 | 735·6 | 17·60 | 529·1 | 736·4 |
| 55 | 19·58 | 526·2 | 735·5 | 20·55 | 525·2 | 734·1 | 19·39 | 523·9 | 734·5 | 17·63 | 527·3 | 736·3 |

BIFILAR. Observed 2m after the Declination, $k=0{\cdot}000140$. BALANCE. Observed 3m after the Declination, $k=0{\cdot}0000085$.

The temperature of the bifilar and balance magnets, and the observers' initials, will be found at the corresponding hours in the Hourly Observations of Magnetometers.

When double commas (,,) occur in the column for the balance magnetometer, the needle was examined, and no change from the previous observation being appreciable, the micrometers were not altered.

| Göttingen Mean Time of Declination Observation. | March 20, 21. | | | | | | | | | | | |
|---|---|---|---|---|---|---|---|---|---|---|---|---|
| | Declination. | Bifilar Corrected. | Balance Corrected. | Declination. | Bifilar Corrected. | Balance Corrected. | Declination. | Bifilar Corrected. | Balance Corrected. | Declination. | Bifilar Corrected. | Balance Corrected. |
| Min. | ° ′ | Sc. Div. | Mic. Div. | ° ′ | Sc. Div. | Mic. Div. | ° ′ | Sc. Div. | Mic. Div. | ° ′ | Sc. Div. | Mic. Div. |
| | | 10h. | | | 14h. | | | 18h. | | | 22h. | |
| 0 | 25 13·70 | 523·0 | 744·8 | 25 16·75 | 522·0 | 724·3 | 25 17·58 | 521·8 | 722·3 | 25 16·99 | 512·0 | 724·7 |
| 5 | 11·22 | 531·8 | 738·7 | 16·63 | 522·2 | 723·0 | 17·49 | 520·2 | 721·2 | 17·49 | 512·3 | 724·5 |
| 10 | 10·31 | 537·5 | 734·8 | 16·62 | 522·1 | 724·8 | 17·80 | 521·1 | ,, | 17·60 | 512·6 | 723·9 |
| 15 | 11·37 | 538·5 | 733·2 | 16·45 | 522·4 | ,, | 18·16 | 522·5 | 721·2 | 17·94 | 513·9 | 723·0 |
| 20 | 12·78 | 535·7 | 735·3 | 16·43 | 522·6 | 725·3 | 18·58 | 522·8 | 719·9 | 18·16 | 512·2 | 722·2 |
| 25 | 13·79 | 531·9 | 735·0 | 16·35 | 522·6 | 728·6 | 18·84 | 523·0 | 717·3 | 18·16 | 512·0 | 721·3 |
| 30 | 14·06 | 526·2 | ,, | 16·38 | 522·7 | ,, | 18·75 | 522·7 | 714·9 | 18·16 | 512·7 | 720·8 |
| 35 | 13·47 | 523·2 | 735·3 | 16·28 | 522·4 | ,, | 18·14 | 522·0 | 715·4 | 18·10 | 512·0 | 720·0 |
| 40 | 13·00 | 525·6 | 732·7 | 16·35 | 522·7 | 728·2 | 18·58 | 519·6 | 717·1 | 18·10 | 513·8 | 719·7 |
| 45 | 13·07 | 527·0 | ,, | 16·57 | 522·2 | 725·2 | 17·40 | 520·1 | 718·8 | 18·30 | 513·7 | 720·1 |
| 50 | 13·29 | 528·4 | 731·8 | 16·68 | 522·1 | 725·2 | 17·73 | 523·7 | 718·4 | 18·52 | 513·8 | 720·2 |
| 55 | 13·86 | 529·1 | ,, | 16·86 | 522·0 | ,, | 17·76 | 522·8 | 719·0 | 18·81 | 514·1 | 720·6 |
| | | 11h. | | | 15h. | | | 19h. | | | 23h. | |
| 0 | 25 14·41 | 528·6 | 728·2 | 25 16·32 | 521·9 | 724·2 | 25 17·44 | 524·0 | 717·8 | 25 19·10 | 515·0 | 719·8 |
| 5 | 14·92 | 526·1 | ,, | 16·45 | 522·7 | 724·8 | 17·60 | 524·6 | ,, | 19·35 | 514·9 | 720·7 |
| 10 | 15·07 | 523·9 | ,, | 16·73 | 522·5 | 724·2 | 17·53 | 523·9 | 718·5 | 20·05 | 514·8 | 720·7 |
| 15 | 15·09 | 523·2 | ,, | 16·72 | 522·9 | 726·2 | 16·95 | 522·8 | 716·5 | 20·11 | 515·0 | 721·6 |
| 20 | 14·73 | 522·8 | 725·9 | 16·80 | 523·0 | 724·4 | 16·62 | 520·1 | 718·1 | 20·74 | 515·6 | 723·4 |
| 25 | 13·99 | 522·8 | ,, | 16·80 | 523·3 | ,, | 16·28 | 520·0 | 719·2 | 21·17 | 516·6 | 724·2 |
| 30 | 14·46 | 523·2 | 725·4 | 16·68 | 523·3 | 723·1 | 16·15 | 520·3 | 720·4 | 21·66 | 515·8 | 723·9 |
| 35 | 14·43 | 525·7 | 722·6 | 16·63 | 523·0 | 725·2 | 16·36 | 520·0 | 721·4 | 21·76 | 514·5 | ,, |
| 40 | 14·17 | 527·2 | 721·2 | 16·48 | 522·7 | ,, | 16·36 | 520·4 | 722·1 | 21·26 | 512·8 | 725·5 |
| 45 | 13·90 | 528·1 | ,, | 16·41 | 522·8 | 723·2 | 16·28 | 519·7 | 722·1 | 21·37 | 513·1 | 725·3 |
| 50 | 13·59 | 527·6 | 719·2 | 16·26 | 523·3 | 721·9 | 15·83 | 520·8 | 722·2 | 21·37 | 514·2 | 724·5 |
| 55 | 13·49 | 526·5 | ,, | 16·36 | 523·3 | ,, | 15·79 | 520·8 | 722·5 | 21·57 | 514·4 | 724·7 |
| | | 12h. | | | 16h. | | | 20h. | | | 0h. | |
| 0 | 25 13·59 | 526·5 | 718·8 | 25 16·32 | 523·5 | 720·8 | 25 15·51 | 520·4 | 722·4 | 25 21·73 | 514·3 | 724·5 |
| 5 | 13·99 | 523·5 | ,, | 16·15 | 523·4 | 721·3 | 15·17 | 521·3 | 722·2 | 21·84 | 513·7 | 724·9 |
| 10 | 14·13 | 522·5 | ,, | 16·08 | 523·5 | ,, | 14·84 | 520·5 | 722·8 | 21·83 | 514·5 | 725·2 |
| 15 | 14·60 | 521·3 | 718·8 | 16·01 | 523·4 | 723·3 | 14·70 | 521·1 | 722·9 | 22·27 | 513·3 | 726·3 |
| 20 | 14·92 | 520·4 | ,, | 15·86 | 523·5 | 722·3 | 14·67 | 521·2 | 723·0 | 22·20 | 513·3 | 726·5 |
| 25 | 15·34 | 520·5 | ,, | 15·85 | 523·9 | 722·9 | 15·01 | 520·7 | 723·2 | 22·11 | 513·6 | 726·0 |
| 30 | 15·54 | 520·3 | 719·5 | 15·65 | 523·6 | 721·9 | 14·78 | 520·0 | 723·7 | 22·06 | 513·8 | 726·6 |
| 35 | 16·30 | 520·8 | ,, | 15·52 | 523·5 | ,, | 15·24 | 519·9 | 723·5 | 22·24 | 514·1 | 726·4 |
| 40 | 16·84 | 522·9 | 721·1 | 15·62 | 522·9 | 724·0 | 15·38 | 520·1 | 724·8 | 22·47 | 514·6 | 726·3 |
| 45 | 17·58 | 524·2 | ,, | 15·45 | 523·3 | ,, | 15·32 | 518·2 | 724·9 | 22·55 | 516·0 | 725·8 |
| 50 | 18·11 | 525·0 | 719·5 | 15·58 | 523·0 | 722·8 | 14·89 | 517·3 | 724·5 | 22·98 | 516·2 | 726·9 |
| 55 | 18·10 | 525·6 | ,, | 15·81 | 522·9 | 724·8 | 14·75 | 515·8 | 724·1 | 23·19 | 515·1 | 727·3 |
| | | 13h. | | | 17h. | | | 21h. | | | 1h. | |
| 0 | 25 18·05 | 525·9 | 720·9 | 25 16·18 | 523·2 | 725·3 | 25 14·46 | 515·1 | 726·2 | 25 23·24 | 515·7 | 727·1 |
| 5 | 17·58 | 524·8 | 720·6 | 16·68 | 523·4 | 724·8 | 15·45 | 513·1 | 727·4 | 23·24 | 517·2 | 727·1 |
| 10 | 17·36 | 523·3 | ,, | 16·35 | 523·8 | 724·9 | 15·44 | 512·4 | 729·2 | 23·19 | 518·0 | 726·2 |
| 15 | 17·06 | 524·3 | 723·0 | 16·16 | 523·0 | 725·7 | 15·96 | 510·7 | 729·5 | 23·24 | 517·2 | 726·1 |
| 20 | 16·92 | 522·6 | 727·3 | 16·41 | 522·6 | ,, | 16·08 | 510·2 | 730·4 | 23·51 | 517·6 | 727·4 |
| 25 | 16·68 | 521·7 | ,, | 16·05 | 523·1 | 722·9 | 16·87 | 510·6 | 730·7 | 23·25 | 519·5 | 727·0 |
| 30 | 16·43 | 522·0 | 727·7 | 16·15 | 523·4 | 722·9 | 16·82 | 510·8 | 729·6 | 23·65 | 517·0 | 726·9 |
| 35 | 16·84 | 522·0 | 726·5 | 16·79 | 521·5 | 723·9 | 17·42 | 511·1 | 729·6 | 23·32 | 518·7 | 726·5 |
| 40 | 16·95 | 522·3 | 724·6 | 16·80 | 521·3 | 723·8 | 17·56 | 511·2 | 729·1 | 23·14 | 519·3 | ,, |
| 45 | 16·93 | 522·6 | ,, | 16·90 | 521·7 | 724·3 | 17·15 | 511·4 | 728·2 | 23·18 | 519·9 | 725·9 |
| 50 | 16·89 | 523·0 | 724·1 | 17·67 | 521·7 | 725·1 | 17·22 | 512·1 | 727·5 | 23·21 | 519·7 | 726·4 |
| 55 | 16·79 | 522·8 | ,, | 18·10 | 521·5 | 723·4 | 17·56 | 511·7 | 726·4 | 23·38 | 519·5 | ,, |

BIFILAR. Observed 2m after the Declination, $k$=0·000140. BALANCE. Observed 3m after the Declination, $k$=0·0000085.

The temperature of the bifilar and balance magnets, and the observers' initials, will be found at the corresponding hours in the Hourly Observations of Magnetometers.

When double commas (,,) occur in the column for the balance magnetometer, the needle was examined, and no change from the previous observation being appreciable, the micrometers were not altered.

| Göttingen Mean Time of Declination Observation. | March 20, 21. | | | | | | April 24, 25. | | | | | |
|---|---|---|---|---|---|---|---|---|---|---|---|---|
| | Declination. | Bifilar Corrected. | Balance Corrected. | Declination. | Bifilar Corrected. | Balance Corrected. | Declination. | Bifilar Corrected. | Balance Corrected. | Declination. | Bifilar Corrected. | Balance Corrected. |
| Min. | ° ′ | Sc. Div. | Mic. Div. | ° ′ | Sc. Div. | Mic. Div. | ° ′ | Sc. Div. | Mic. Div. | ° ′ | Sc. Div. | Mic. Div. |
| | | 2h. | | | 6h. | | | 10h. | | | 14h. | |
| 0 | 25 23·25 | 521·1 | 727·2 | 25 18·01 | 525·1 | 758·1 | 25 17·78 | 530·3 | 731·2 | 25 16·10 | 527·4 | 707·1 |
| 5 | 23·19 | 520·1 | ,, | 18·07 | 525·5 | 758·6 | 17·53 | 530·8 | 730·3 | 16·01 | 528·2 | ,, |
| 10 | 23·25 | 521·4 | 727·8 | 17·78 | 524·7 | 758·0 | 17·53 | 531·6 | 730·1 | 15·92 | 528·9 | 709·2 |
| 15 | 22·84 | 521·8 | ,, | 17·54 | 524·6 | 757·9 | 17·96 | 530·9 | 728·9 | 16·03 | 528·4 | 709·9 |
| 20 | 22·69 | 521·7 | 727·1 | 17·51 | 524·9 | 757·5 | 18·05 | 530·7 | 728·2 | 16·10 | 527·2 | ,, |
| 25 | 23·12 | 523·7 | ,, | 17·49 | 524·1 | 757·9 | 18·05 | 530·5 | 727·7 | 16·16 | 526·6 | 710·9 |
| 30 | 22·74 | 523·0 | 729·0 | 17·29 | 523·0 | 757·8 | 18·23 | 531·0 | 723·7 | 16·13 | 525·3 | 712·4 |
| 35 | 22·35 | 523·1 | ,, | 17·06 | 522·5 | 755·9 | 17·74 | 533·8 | 722·8 | 15·83 | 524·9 | 713·5 |
| 40 | 22·47 | 522·9 | 730·2 | 16·92 | 524·2 | 756·9 | 17·67 | 531·6 | 722·6 | 15·94 | 525·1 | 712·8 |
| 45 | 22·64 | 523·2 | ,, | 16·97 | 523·4 | 755·6 | 17·44 | 530·4 | 723·4 | 16·12 | 525·5 | 709·3 |
| 50 | 22·40 | 522·8 | 732·1 | 16·72 | 523·6 | ,, | 17·40 | 531·3 | 723·3 | 16·21 | 525·6 | 710·7 |
| 55 | 22·40 | 522·8 | ,, | 16·73 | 524·3 | ,, | 17·78 | 530·8 | 722·8 | 16·39 | 526·0 | ,, |
| | | 3h. | | | 7h. | | | 11h. | | | 15h. | |
| 0 | 25 22·17 | 523·4 | 730·6 | 25 16·97 | 525·2 | 756·3 | 25 17·36 | 530·1 | 722·7 | 25 16·82 | 526·1 | ,, |
| 5 | 22·27 | 523·2 | ,, | 17·02 | 524·2 | 755·7 | 17·02 | 531·2 | 723·4 | 17·09 | 525·7 | 710·1 |
| 10 | 22·24 | 523·4 | 730·6 | 17·02 | 525·5 | 755·1 | 17·22 | 531·8 | 721·9 | 17·06 | 525·0 | ,, |
| 15 | 22·15 | 523·3 | ,, | 16·87 | 526·5 | 752·4 | 17·13 | 531·1 | 720·3 | 16·80 | 525·7 | 716·2 |
| 20 | 22·00 | 523·8 | 730·3 | 17·31 | 526·0 | 750·0 | 16·68 | 530·2 | 720·6 | 16·97 | 525·7 | 715·9 |
| 25 | 21·81 | 522·8 | 730·9 | 17·39 | 525·3 | ,, | 16·21 | 530·1 | 720·4 | 16·87 | 525·5 | 716·4 |
| 30 | 21·84 | 523·5 | ,, | 17·19 | 525·9 | 748·7 | 16·35 | 530·5 | 721·4 | 16·89 | 525·9 | 714·2 |
| 35 | 21·90 | 523·9 | 731·4 | 16·93 | 527·4 | 749·7 | 16·28 | 529·8 | 720·0 | 17·34 | 526·5 | 716·1 |
| 40 | 21·29 | 524·5 | 730·9 | 17·15 | 527·2 | 748·1 | 16·16 | 529·3 | 718·3 | 17·47 | 524·8 | 714·0 |
| 45 | 21·59 | 526·1 | 730·6 | 17·42 | 527·6 | 748·4 | 15·94 | 529·4 | 718·8 | 16·82 | 524·9 | 713·0 |
| 50 | 21·57 | 527·0 | 731·0 | 17·53 | 528·7 | 746·8 | 15·81 | 529·8 | 719·0 | 16·43 | 524·4 | 714·7 |
| 55 | 21·53 | 527·2 | ,, | 17·67 | 528·6 | 744·6 | 16·03 | 529·2 | 719·6 | 16·16 | 524·3 | ,, |
| | | 4h. | | | 8h. | | | 12h. | | | 16h. | |
| 0 | 25 21·56 | 528·1 | 728·3 | 25 17·63 | 527·7 | ,, | 25 16·15 | 528·9 | 720·3 | 25 16·13 | 525·4 | 710·8 |
| 5 | 21·73 | 527·3 | ,, | 17·44 | 527·7 | 745·2 | 16·23 | 529·1 | 720·0 | 16·52 | 524·5 | 710·1 |
| 10 | 21·37 | 526·4 | 733·3 | 17·61 | 527·3 | 745·4 | 16·95 | 528·6 | 720·1 | 16·50 | 524·1 | ,, |
| 15 | 21·07 | 526·5 | ,, | 17·42 | 527·3 | 746·7 | 17·80 | 528·7 | 719·5 | 16·08 | 524·3 | 709·8 |
| 20 | 21·12 | 525·9 | 733·8 | 17·56 | 527·7 | 746·3 | 18·03 | 530·1 | 716·9 | 16·19 | 524·1 | ,, |
| 25 | 20·89 | 524·9 | 735·5 | 17·65 | 526·9 | 747·4 | 17·40 | 530·9 | 713·9 | 16·01 | 523·8 | 709·6 |
| 30 | 20·65 | 523·9 | 735·9 | 17·70 | 526·7 | 745·8 | 17·33 | 531·7 | 711·0 | 16·08 | 523·5 | 710·3 |
| 35 | 20·62 | 525·0 | 736·3 | 17·49 | 526·8 | ,, | 16·28 | 533·6 | 708·3 | 15·91 | 523·1 | 711·9 |
| 40 | 20·35 | 524·6 | 738·1 | 16·97 | 528·1 | 744·9 | 16·12 | 534·6 | 705·8 | 15·71 | 522·7 | 711·3 |
| 45 | 20·11 | 525·1 | 738·4 | 16·82 | 528·8 | 744·6 | 15·56 | 534·5 | 704·6 | 16·10 | 522·2 | 713·5 |
| 50 | 20·16 | 526·2 | 739·4 | 16·87 | 529·0 | ,, | 15·45 | 533·4 | 703·2 | 16·41 | 521·5 | 713·3 |
| 55 | 19·88 | 525·9 | 739·7 | 17·02 | 528·6 | 744·2 | 15·42 | 531·5 | 703·7 | 16·92 | 521·3 | 714·2 |
| | | 5h. | | | 9h. | | | 13h. | | | 17h. | |
| 0 | 25 19·78 | 525·9 | 740·9 | 25 17·47 | 529·0 | 745·2 | 25 15·11 | 530·6 | 702·7 | 25 17·63 | 521·1 | 714·1 |
| 5 | 19·51 | 526·1 | 741·4 | 16·89 | 529·0 | 743·8 | 14·87 | 529·7 | ,, | 17·70 | 521·8 | 713·6 |
| 10 | 19·46 | 525·9 | 742·4 | 16·59 | 529·2 | 743·3 | 14·67 | 529·0 | 703·2 | 17·93 | 522·6 | ,, |
| 15 | 19·28 | 525·2 | 743·9 | 16·66 | 528·6 | 743·8 | 14·55 | 528·3 | 704·1 | 17·81 | 523·7 | 711·5 |
| 20 | 18·99 | 524·1 | 747·0 | 16·90 | 527·4 | 745·1 | 14·53 | 527·0 | 705·5 | 17·49 | 524·1 | 711·4 |
| 25 | 18·82 | 522·9 | 749·9 | 17·40 | 525·1 | 746·7 | 14·55 | 526·4 | 706·3 | 17·09 | 525·3 | 717·0 |
| 30 | 18·54 | 522·2 | 752·4 | 17·36 | 524·2 | 747·5 | 14·55 | 526·3 | 706·7 | 16·66 | 526·4 | 714·6 |
| 35 | 18·23 | 522·8 | 754·0 | 16·95 | 524·1 | 747·6 | 14·80 | 526·6 | 706·8 | 16·28 | 526·7 | 712·7 |
| 40 | 18·00 | 522·6 | 756·0 | 16·82 | 524·3 | 747·8 | 15·02 | 526·9 | ,, | 16·13 | 526·8 | 707·4 |
| 45 | 17·94 | 523·5 | 757·0 | 16·68 | 523·5 | 747·9 | 15·18 | 527·3 | 707·9 | 15·71 | 526·1 | 707·8 |
| 50 | 18·08 | 523·5 | 757·8 | 16·35 | 523·2 | 748·3 | 15·62 | 528·4 | 707·6 | 15·62 | 525·2 | 710·4 |
| 55 | 17·83 | 525·1 | 758·1 | 16·68 | 524·4 | 747·8 | 16·15 | 527·5 | ,, | 15·45 | 524·8 | 714·8 |

BIFILAR. Observed 2m after the Declination, $k$=0·000140. BALANCE. Observed 3m after the Declination, $k$=0·0000085.

The temperature of the bifilar and balance magnets, and the observers' initials, will be found at the corresponding hours in the Hourly Observations of Magnetometers.

When double commas (,,) occur in the column for the balance magnetometer, the needle was examined, and no change from the previous observation being appreciable, the micrometers were not altered.

| Göttingen Mean time of Declination Observation. | April 24, 25. | | | | | | | | | | | |
|---|---|---|---|---|---|---|---|---|---|---|---|---|
| | Declination. | Bifilar Corrected. | Balance Corrected. | Declination. | Bifilar Corrected. | Balance Corrected. | Declination. | Bifilar Corrected. | Balance Corrected. | Declination. | Bifilar Corrected. | Balance Corrected. |
| Min. | ° ′ | Sc. Div. | Mic. Div. | ° ′ | Sc. Div. | Mic. Div. | ° ′ | Sc. Div. | Mic. Div. | ° ′ | Sc. Div. | Mic. Div. |
| | | 18h. | | | 22h. | | | 2h. | | | 6h. | |
| 0 | 25 14·87 | 525·4 | 721·9 | 25 12·82 | 520·2 | 721·1 | 25 28·90 | 514·6 | 732·9 | 25 24·84 | 535·1 | 817·5 |
| 5 | 15·04 | 526·2 | 720·0 | 13·69 | 519·3 | 723·0 | 29·29 | 519·8 | 729·1 | 25·46 | 540·4 | 817·4 |
| 10 | 14·87 | 525·7 | 721·2 | 14·17 | 518·0 | ,, | 29·70 | 528·5 | 726·7 | 24·94 | 543·8 | ,, |
| 15 | 15·34 | 525·5 | 722·5 | 14·53 | 518·1 | 724·7 | 28·99 | 518·4 | 731·2 | 24·89 | 548·6 | 816·4 |
| 20 | 15·49 | 525·8 | 722·2 | 14·77 | 517·2 | ,, | 28·82 | 521·2 | 735·5 | 23·05 | 546·2 | 817·9 |
| 25 | 15·42 | 526·3 | ,, | 14·89 | 515·4 | 724·3 | 29·01 | 523·1 | 737·2 | 22·80 | 547·3 | 819·0 |
| 30 | 15·52 | 527·6 | 721·3 | 15·34 | 513·2 | ,, | 30·07 | 526·1 | 736·4 | 23·72 | 546·2 | 822·3 |
| 35 | 15·54 | 528·8 | 720·3 | 15·67 | 513·2 | 725·1 | 30·81 | 529·7 | 745·4 | 23·45 | 552·3 | 829·4 |
| 40 | 15·52 | 529·0 | ,, | 16·01 | 513·1 | ,, | 30·85 | 530·5 | 746·3 | 22·48 | 553·6 | 840·0 |
| 45 | 15·61 | 529·3 | 720·1 | 16·10 | 512·4 | 725·7 | 31·09 | 528·6 | 750·5 | 20·23 | 554·2 | 855·5 |
| 50 | 15·51 | 528·9 | 720·2 | 16·38 | 512·4 | ,, | 31·01 | 526·7 | 754·7 | 19·10 | 554·0 | 868·8 |
| 55 | 15·31 | 529·3 | ,, | 16·82 | 512·7 | 725·7 | 30·98 | 527·9 | 758·8 | 15·94 | 551·8 | 899·5 |
| | | 19h. | | | 23h. | | | 3h. | | | 7h. | |
| 0 | 25 15·34 | 528·9 | 720·9 | 25 16·90 | 511·7 | 725·6 | 25 31·25 | 525·4 | 761·1 | 25 13·12 | 572·3 | 922·9 |
| 5 | 14·92 | 528·1 | 721·2 | 16·63 | 512·7 | ,, | 30·29 | 528·6 | ,, | 25 04·04 | 587·1 | 988·5 |
| 10 | 14·20 | 528·8 | 722·5 | 17·53 | 512·4 | 723·7 | 29·12 | 519·7 | 765·5 | 24 51·27 | 610·7 | 1015·4 |
| 15 | 14·13 | 528·4 | 722·9 | 18·05 | 511·2 | 725·8 | 28·79 | 517·0 | 767·6 | 24 43·70 | 583·2 | 906·6 |
| 20 | 13·54 | 528·8 | ,, | 18·11 | 510·1 | ,, | 29·39 | 516·8 | 769·0 | 25 01·34 | 561·7 | 870·4 |
| 25 | 13·39 | 528·6 | 724·0 | 18·41 | 510·4 | 725·4 | 30·13 | 515·5 | 770·0 | 25 08·52 | 528·9 | 860·4 |
| 30 | 13·25 | 529·0 | 724·6 | 18·82 | 511·4 | ,, | 30·05 | 514·7 | 770·6 | 25 04·12 | 531·8 | 853·8 |
| 35 | 13·25 | 529·0 | 725·7 | 19·39 | 510·9 | 721·7 | 30·22 | 523·6 | 768·9 | 25 01·58 | 529·0 | 845·0 |
| 40 | 13·12 | 528·5 | 726·4 | 19·51 | 511·5 | ,, | 29·46 | 531·3 | 767·7 | 24 59·51 | 535·7 | 831·0 |
| 45 | 12·93 | 527·5 | 727·8 | 20·00 | 511·8 | 720·4 | 28·08 | 521·7 | 775·8 | 25 03·81 | 530·0 | 829·3 |
| 50 | 12·75 | 526·7 | 728·8 | 20·72 | 512·5 | ,, | 27·61 | 517·5 | 779·8 | 25 07·52 | 526·0 | 825·8 |
| 55 | 12·42 | 526·6 | ,, | 20·96 | 512·8 | 719·1 | 26·25 | 514·5 | 781·7 | 25 10·48 | 519·8 | 824·6 |
| | | 20h. | | | 0h. | | | 4h. | | | 8h. | |
| 0 | 25 12·40 | 526·1 | 730·3 | 25 21·24 | 511·9 | 718·5 | 25 25·47 | 515·1 | 781·0 | 25 12·13 | 517·3 | 822·1 |
| 5 | 12·20 | 526·4 | 731·7 | 21·79 | 511·0 | ,, | 24·28 | 518·3 | 778·4 | 14·33 | 513·6 | 819·5 |
| 10 | 12·40 | 526·1 | 732·1 | 21·88 | 511·2 | 717·3 | 23·52 | 523·3 | 772·8 | 15·02 | 507·9 | 822·6 |
| 15 | 12·18 | 526·1 | ,, | 22·22 | 511·3 | ,, | 22·91 | 527·3 | 769·0 | 12·69 | 510·2 | 823·5 |
| 20 | 12·42 | 524·8 | ,, | 22·91 | 510·3 | 716·0 | 23·41 | 535·7 | 765·5 | 11·71 | 515·9 | 821·9 |
| 25 | 12·11 | 524·5 | 732·9 | 23·41 | 509·1 | ,, | 23·75 | 541·6 | 761·1 | 12·76 | 520·9 | 813·2 |
| 30 | 12·04 | 523·9 | ,, | 22·82 | 511·4 | 713·6 | 22·98 | 541·8 | 759·7 | 14·60 | 522·1 | 811·5 |
| 35 | 11·88 | 524·5 | ,, | 23·66 | 511·6 | ,, | 22·87 | 541·2 | 759·5 | 16·35 | 520·2 | 805·9 |
| 40 | 11·86 | 524·0 | ,, | 23·56 | 513·6 | 712·7 | 23·56 | 549·1 | 756·5 | 17·58 | 518·2 | 800·2 |
| 45 | 11·48 | 524·3 | 730·8 | 24·19 | 510·6 | ,, | 24·15 | 552·1 | 754·8 | 17·34 | 519·0 | 796·3 |
| 50 | 12·23 | 524·2 | ,, | 23·92 | 513·9 | 713·2 | 23·58 | 548·7 | 756·6 | 17·37 | 521·2 | 790·9 |
| 55 | 12·43 | 523·7 | 730·5 | 24·15 | 516·5 | ,, | 23·68 | 549·5 | 756·6 | 17·40 | 524·3 | 786·6 |
| | | 21h. | | | 1h. | | | 5h. | | | 9h. | |
| 0 | 25 12·55 | 523·5 | 728·0 | 25 24·89 | 524·3 | 713·6 | 25 23·65 | 546·9 | 757·7 | 25 17·65 | 524·0 | 780·3 |
| 5 | 12·69 | 522·8 | 729·7 | 25·43 | 522·5 | 714·9 | 24·91 | 553·1 | 757·7 | 18·13 | 525·4 | 776·0 |
| 10 | 12·75 | 521·8 | 729·0 | 25·83 | 525·8 | 716·7 | 25·76 | 558·2 | 757·2 | 18·18 | 525·1 | 773·8 |
| 15 | 12·53 | 521·4 | 728·0 | 26·11 | 528·1 | 718·4 | 26·13 | 558·3 | 760·1 | 18·28 | 524·4 | ,, |
| 20 | 12·25 | 521·2 | 730·9 | 26·87 | 531·5 | 719·1 | 26·16 | 559·5 | 762·8 | 18·40 | 524·2 | 769·9 |
| 25 | 11·91 | 521·3 | ,, | 26·84 | 532·3 | 719·2 | 26·16 | 561·5 | 766·1 | 18·43 | 524·1 | 768·5 |
| 30 | 12·02 | 521·5 | 731·0 | 27·58 | 532·1 | 723·1 | 25·73 | 560·8 | 772·5 | 18·38 | 524·7 | 764·9 |
| 35 | 12·38 | 521·1 | ,, | 27·21 | 528·7 | 724·9 | 25·46 | 556·3 | 783·8 | 18·57 | 524·5 | 762·5 |
| 40 | 12·62 | 520·3 | 731·8 | 26·85 | 523·3 | 728·8 | 24·15 | 545·1 | 796·3 | 18·74 | 524·3 | 760·8 |
| 45 | 12·75 | 519·8 | ,, | 27·01 | 517·2 | 732·3 | 23·56 | 540·2 | 805·0 | 18·84 | 524·1 | 759·0 |
| 50 | 12·70 | 519·7 | 726·3 | 26·38 | 511·8 | 735·9 | 24·32 | 534·1 | 813·3 | 18·70 | 524·1 | 755·5 |
| 55 | 12·72 | 520·3 | ,, | 26·63 | 505·3 | 733·9 | 24·30 | 528·1 | 817·9 | 18·61 | 525·6 | 750·2 |

**BIFILAR.** Observed 2m after the Declination, $k$=0·000140. **BALANCE.** Observed 3m after the Declination, $k$=0·0000085.

The temperature of the bifilar and balance magnets, and the observers' initials will be found at the corresponding hours in the Hourly Observations of Magnetometers.

When double commas (,,) occur in the column for the balance magnetometer, the needle was examined, and no change from the previous observation being appreciable, the micrometers were not altered.

April 25d 7h 0m—30m. See Extra Observations of Magnetometers for some additional observations made at this time.

| Göttingen Mean Time of Declination Observation. | May 24, 25. | | | | | | | | | | | |
|---|---|---|---|---|---|---|---|---|---|---|---|---|
| | Declination. | Bifilar Corrected. | Balance Corrected. | Declination. | Bifilar Corrected. | Balance Corrected. | Declination. | Bifilar Corrected. | Balance Corrected. | Declination. | Bifilar Corrected. | Balance Corrected. |
| Min. | ° ′ | Sc. Div. | Mic. Div. | ° ′ | Sc. Div. | Mic. Div. | ° ′ | Sc. Div. | Mic. Div. | ° ′ | Sc. Div. | Mic. Div. |
| | | 10h. | | | 14h. | | | 18h. | | | 22h. | |
| 0 | 25 19·48 | 534·0 | 694·1 | 25 14·73 | 521·2 | 667·4 | 25 13·56 | 522·6 | 693·7 | 25 14·98 | 516·2 | 699·2 |
| 5 | 19·46 | 531·4 | 690·3 | 14·75 | 521·9 | ,, | 13·32 | 522·7 | 695·8 | 14·62 | 516·2 | ,, |
| 10 | 18·84 | 530·7 | 686·6 | 15·85 | 522·0 | ,, | 13·42 | 526·8 | 697·3 | 14·80 | 516·5 | 697·9 |
| 15 | 18·95 | 528·1 | 685·0 | 16·06 | 522·2 | 661·9 | 13·52 | 525·1 | 699·0 | 14·24 | 516·2 | 697·1 |
| 20 | 18·28 | 525·4 | 683·5 | 16·65 | 522·7 | 660·9 | 13·57 | 523·9 | 700·6 | 15·38 | 516·3 | 696·3 |
| 25 | 16·75 | 525·6 | 684·3 | 16·80 | 523·4 | 659·0 | 13·56 | 524·5 | 700·4 | 15·47 | 516·1 | 696·4 |
| 30 | 15·34 | 530·3 | 683·2 | 16·33 | 524·2 | 657·2 | 13·36 | 525·6 | ,, | 15·91 | 514·9 | 696·7 |
| 35 | 15·41 | 534·0 | 683·9 | 15·64 | 524·1 | 657·4 | 13·19 | 524·8 | 700·8 | 15·81 | 514·6 | ,, |
| 40 | 16·06 | 532·3 | 684·8 | 15·11 | 523·0 | 657·8 | 13·14 | 524·7 | 701·1 | 16·05 | 515·0 | 697·4 |
| 45 | 15·69 | 530·2 | 685·3 | 14·64 | 523·3 | ,, | 13·25 | 524·7 | 702·3 | 16·28 | 514·3 | ,, |
| 50 | 14·87 | 530·6 | ,, | 15·39 | 523·6 | 657·1 | 13·29 | 524·4 | 703·8 | 16·06 | 514·6 | 698·0 |
| 55 | 14·53 | 531·0 | ,, | 15·65 | 522·4 | 655·7 | 13·43 | 523·8 | 704·1 | 16·16 | 514·7 | ,, |
| | | 11h. | | | 15h. | | | 19h. | | | 23h. | |
| 0 | 25 14·75 | 532·1 | 685·2 | 25 16·13 | 521·6 | ,, | 25 13·07 | 519·8 | 704·1 | 25 16·28 | 514·0 | 699·0 |
| 5 | 15·51 | 530·3 | 685·2 | 16·84 | 519·2 | 655·2 | 13·16 | 519·8 | 705·9 | 16·89 | 514·4 | ,, |
| 10 | 15·78 | 529·3 | 686·1 | 17·00 | 519·5 | ,, | 13·44 | 519·7 | 706·7 | 17·36 | 515·2 | 698·3 |
| 15 | 16·45 | 526·8 | 687·7 | 17·00 | 519·6 | 654·6 | 13·49 | 519·9 | 707·0 | 17·39 | 516·2 | ,, |
| 20 | 16·15 | 525·1 | ,, | 16·68 | 521·8 | 654·3 | 13·36 | 518·5 | 707·7 | 17·54 | 516·2 | 698·0 |
| 25 | 15·54 | 524·0 | 686·4 | 16·36 | 522·4 | ,, | 13·07 | 519·0 | 707·7 | 17·98 | 517·5 | 696·7 |
| 30 | 14·89 | 525·7 | 687·4 | 16·36 | 519·3 | 654·1 | 12·55 | 519·5 | 707·7 | 17·53 | 518·9 | 695·6 |
| 35 | 15·01 | 524·9 | 688·1 | 15·94 | 520·0 | 658·5 | 12·89 | 518·7 | 707·7 | 18·03 | 518·3 | ,, |
| 40 | 15·38 | 525·3 | 688·2 | 16·06 | 519·8 | 660·7 | 12·70 | 518·0 | 707·9 | 18·10 | 518·1 | 696·6 |
| 45 | 16·01 | 524·8 | 689·0 | 16·19 | 521·3 | 660·8 | 12·78 | 517·6 | 708·4 | 18·48 | 519·5 | ,, |
| 50 | 16·33 | 526·3 | 687·6 | 16·70 | 522·4 | 665·4 | 13·05 | 519·7 | 708·4 | 18·84 | 516·0 | 693·3 |
| 55 | 17·04 | 525·6 | 685·8 | 16·35 | 523·7 | ,, | 13·09 | 515·8 | 709·0 | 18·87 | 521·8 | 693·7 |
| | | 12h. | | | 16h. | | | 20h. | | | 0h. | |
| 0 | 25 16·97 | 524·3 | 686·2 | 25 16·53 | 524·5 | ,, | 25 12·90 | 516·7 | 708·8 | 25 19·44 | 522·8 | 690·7 |
| 5 | 17·36 | 524·4 | 684·2 | 16·72 | 525·3 | 665·3 | 12·65 | 517·5 | ,, | 19·28 | 522·0 | ,, |
| 10 | 17·42 | 524·6 | 677·7 | 16·97 | 524·6 | ,, | 12·69 | 517·4 | 707·8 | 19·55 | 521·9 | 693·6 |
| 15 | 17·60 | 524·0 | 672·8 | 16·63 | 524·2 | 664·6 | 12·40 | 517·5 | 708·2 | 19·53 | 520·1 | ,, |
| 20 | 19·05 | 519·4 | 675·3 | 16·01 | 524·9 | 668·6 | 12·80 | 517·1 | 708·2 | 20·11 | 522·2 | 692·8 |
| 25 | 19·41 | 516·6 | 673·7 | 15·18 | 525·3 | 667·1 | 13·05 | 517·2 | 708·1 | 20·16 | 525·1 | ,, |
| 30 | 19·37 | 517·0 | 671·3 | 14·58 | 524·9 | 668·0 | 13·39 | 516·3 | 708·7 | 20·72 | 526·0 | 692·9 |
| 35 | 18·20 | 518·7 | 669·5 | 14·13 | 524·7 | 674·8 | 12·90 | 515·8 | 708·7 | 20·90 | 528·4 | 690·9 |
| 40 | 17·46 | 519·1 | 666·6 | 13·76 | 524·6 | 675·3 | 12·80 | 515·1 | 708·7 | 21·17 | 526·6 | ,, |
| 45 | 16·60 | 521·5 | 664·8 | 13·47 | 524·8 | 674·0 | 12·75 | 515·8 | 709·3 | 21·48 | 524·2 | 692·0 |
| 50 | 16·13 | 525·3 | 661·7 | 13·76 | 524·4 | 677·4 | 12·85 | 516·4 | 709·0 | 20·77 | 524·8 | ,, |
| 55 | 15·36 | 529·3 | 659·2 | 13·81 | 524·9 | ,, | 13·32 | 516·4 | ,, | 21·06 | 528·4 | 689·4 |
| | | 13h. | | | 17h. | | | 21h. | | | 1h. | |
| 0 | 25 15·42 | 528·8 | 659·9 | 25 14·40 | 524·8 | 677·8 | 25 12·83 | 516·1 | 707·2 | 25 21·37 | 529·6 | 689·0 |
| 5 | 15·11 | 530·1 | ,, | 14·01 | 525·1 | 680·7 | 13·90 | 515·7 | 706·7 | 21·46 | 527·5 | 688·7 |
| 10 | 15·69 | 527·9 | 659·7 | 13·79 | 525·1 | ,, | 13·59 | 516·0 | 704·3 | 20·85 | 524·2 | 689·6 |
| 15 | 15·17 | 526·2 | 659·8 | 13·32 | 524·7 | 682·5 | 12·89 | 513·5 | ,, | 20·80 | 526·9 | 688·2 |
| 20 | 14·96 | 524·6 | 660·5 | 13·63 | 524·6 | 681·2 | 12·76 | 513·8 | 703·2 | 20·92 | 525·3 | 690·7 |
| 25 | 14·24 | 523·6 | 661·4 | 14·08 | 524·6 | 681·9 | 13·96 | 514·1 | ,, | 20·52 | 526·3 | 690·3 |
| 30 | 13·94 | 522·5 | 663·7 | 14·17 | 524·4 | ,, | 14·21 | 515·0 | 703·8 | 20·83 | 529·2 | ,, |
| 35 | 14·15 | 521·7 | 665·4 | 13·56 | 524·2 | 679·7 | 14·28 | 515·1 | ,, | 20·69 | 529·2 | ,, |
| 40 | 14·10 | 520·9 | 667·2 | 13·56 | 523·8 | 679·9 | 14·58 | 515·3 | 701·5 | 20·97 | 530·4 | 691·4 |
| 45 | 14·35 | 521·2 | 668·7 | 14·11 | 522·9 | 682·4 | 14·73 | 515·7 | ,, | 20·32 | 534·4 | 691·5 |
| 50 | 14·33 | 521·5 | 669·1 | 13·99 | 523·0 | 685·6 | 14·75 | 515·7 | 699·5 | 20·83 | 533·4 | 694·1 |
| 55 | 14·82 | 520·7 | ,, | 13·67 | 522·6 | 689·3 | 14·60 | 516·2 | ,, | 20·74 | 532·6 | 697·9 |

BIFILAR. Observed 2m after the Declination, $k=0{\cdot}000140$.

BALANCE. Observed 3m after the Declination, $k=0{\cdot}0000085$.

The temperature of the bifilar and balance magnets, and the observers' initials, will be found at the corresponding hours in the Hourly Observations of Magnetometers.

When double commas (,,) occur in the column for the balance magnetometer, the needle was examined, and no change from the previous observation being appreciable, the micrometers were not altered.

| Göttingen Mean Time of Declination Observation. | MAY 24, 25. | | | | | | JUNE 19, 20. | | | | | |
|---|---|---|---|---|---|---|---|---|---|---|---|---|
| | DECLINATION. | BIFILAR Corrected. | BALANCE Corrected. | DECLINATION. | BIFILAR Corrected. | BALANCE Corrected. | DECLINATION. | BIFILAR Corrected. | BALANCE Corrected. | DECLINATION. | BIFILAR Corrected. | BALANCE Corrected. |
| Min. | ° ′ | Sc. Div. | Mic. Div. | ° ′ | Sc. Div. | Mic. Div. | ° ′ | Sc. Div. | Mic. Div. | ° ′ | Sc. Div. | Mic. Div. |
| | | 2h. | | | 6h. | | | 10h. | | | 14h. | |
| 0 | 25 20·35 | 534·0 | 696·2 | 25 19·39 | 538·4 | 711·1 | 25 17·49 | 535·6 | 702·1 | 25 14·80 | 529·5 | 696·7 |
| 5 | 21·44 | 534·9 | 697·3 | 19·39 | 537·7 | ,, | 16·80 | 533·1 | 701·7 | 15·09 | 529·6 | ,, |
| 10 | 21·34 | 532·6 | 699·8 | 19·55 | 539·8 | 708·8 | 16·45 | 533·7 | ,, | 15·05 | 529·1 | 696·7 |
| 15 | 20·96 | 531·9 | 700·3 | 19·51 | 540·3 | 707·9 | 16·28 | 533·9 | 701·6 | 14·94 | 528·7 | ,, |
| 20 | 21·26 | 531·9 | 700·6 | 19·22 | 537·5 | ,, | 16·43 | 535·3 | 701·4 | 14·60 | 529·4 | 695·7 |
| 25 | 21·10 | 531·8 | 700·4 | 19·14 | 539·1 | 707·1 | 16·82 | 535·3 | 702·5 | 14·40 | 530·6 | 695·1 |
| 30 | 21·48 | 532·4 | 700·5 | 19·42 | 540·0 | 705·1 | 16·99 | 534·8 | 702·7 | 14·37 | 529·0 | ,, |
| 35 | 21·43 | 533·6 | 700·9 | 18·97 | 537·4 | ,, | 17·33 | 533·8 | ,, | 13·94 | 528·7 | 696·0 |
| 40 | 21·44 | 533·2 | 701·7 | 19·10 | 539·7 | 704·7 | 16·97 | 533·2 | 700·7 | 13·81 | 529·1 | 695·0 |
| 45 | 21·46 | 532·5 | 702·9 | 18·90 | 541·1 | ,, | 16·80 | 533·7 | 700·6 | 13·59 | 529·2 | 695·4 |
| 50 | 21·48 | 533·5 | 702·9 | 18·90 | 542·2 | 703·4 | 16·95 | 533·2 | 699·9 | 14·10 | 529·1 | ,, |
| 55 | 21·46 | 533·5 | 702·8 | 18·84 | 543·7 | ,, | 16·89 | 533·0 | 700·6 | 14·08 | 530·5 | 694·4 |
| | | 3h. | | | 7h. | | | 11h. | | | 15h. | |
| 0 | 25 21·84 | 534·8 | 701·6 | 25 18·84 | 540·8 | 705·3 | 25 16·82 | 533·2 | 699·9 | 25 14·24 | 530·0 | ,, |
| 5 | 21·43 | 534·2 | 701·9 | 18·63 | 536·6 | 708·0 | 16·75 | 533·8 | 699·7 | 13·39 | 529·4 | 694·6 |
| 10 | 21·51 | 532·9 | 702·0 | 18·34 | 533·8 | 707·8 | 16·89 | 534·5 | 698·8 | 14·13 | 528·6 | 696·5 |
| 15 | 21·66 | 534·5 | 701·7 | 17·98 | 537·7 | 706·0 | 17·02 | 534·2 | 698·5 | 14·08 | 529·7 | 695·6 |
| 20 | 21·59 | 533·1 | 701·6 | 18·10 | 540·5 | 707·7 | 17·02 | 533·9 | ,, | 14·21 | 529·1 | ,, |
| 25 | 21·53 | 533·2 | 702·1 | 18·41 | 540·3 | 708·1 | 17·22 | 533·8 | 697·7 | 14·41 | 529·5 | 694·8 |
| 30 | 21·50 | 533·9 | 702·6 | 18·58 | 539·8 | 709·7 | 17·09 | 533·3 | ,, | 14·37 | 529·1 | 694·7 |
| 35 | 21·17 | 532·2 | 704·1 | 18·60 | 542·1 | 709·1 | 17·07 | 532·8 | ,, | 14·31 | 529·4 | 695·1 |
| 40 | 20·69 | 526·3 | 706·8 | 18·75 | 548·8 | 707·3 | 16·82 | 532·3 | 697·2 | 14·73 | 529·0 | ,, |
| 45 | 20·69 | 525·5 | 708·9 | 18·74 | 545·1 | 709·9 | 16·63 | 531·9 | ,, | 15·05 | 528·3 | 694·7 |
| 50 | 20·69 | 527·4 | 709·3 | 18·40 | 546·5 | 709·3 | 16·65 | 532·8 | 697·0 | 14·62 | 528·9 | ,, |
| 55 | 20·79 | 530·2 | 707·9 | 18·94 | 546·4 | 710·6 | 16·25 | 533·4 | 695·9 | 14·65 | 528·0 | 698·6 |
| | | 4h. | | | 8h. | | | 12h. | | | 16h. | |
| 0 | 25 20·35 | 534·4 | 707·9 | 25 19·01 | 544·0 | 712·3 | 25 16·57 | 533·9 | 695·9 | 25 14·94 | 528·0 | 701·5 |
| 5 | 20·30 | 535·2 | 706·9 | 18·90 | 543·5 | 713·8 | 16·95 | 532·8 | ,, | 15·07 | 528·5 | 706·3 |
| 10 | 20·43 | 536·7 | 706·7 | 18·84 | 542·8 | 714·3 | 16·95 | 531·8 | 697·0 | 15·01 | 528·8 | 702·9 |
| 15 | 20·35 | 536·9 | ,, | 18·63 | 542·8 | 714·7 | 16·65 | 531·3 | 697·0 | 15·04 | 528·9 | 695·5 |
| 20 | 20·00 | 535·1 | 708·7 | 18·37 | 542·8 | 715·4 | 16·15 | 531·1 | ,, | 14·68 | 529·1 | 699·8 |
| 25 | 19·75 | 534·9 | 709·2 | 18·18 | 543·8 | 715·7 | 16·55 | 531·8 | ,, | 14·31 | 529·8 | 706·8 |
| 30 | 19·69 | 537·3 | 709·7 | 17·93 | 543·3 | 716·5 | 16·48 | 531·1 | 698·1 | 14·20 | 529·2 | 707·6 |
| 35 | 19·66 | 534·1 | 711·7 | 17·44 | 541·6 | 717·1 | 16·28 | 531·0 | 698·0 | 14·17 | 529·3 | 706·1 |
| 40 | 19·98 | 535·6 | 710·7 | 16·75 | 540·8 | 716·9 | 16·28 | 532·7 | 696·5 | 14·35 | 529·3 | 699·2 |
| 45 | 19·81 | 534·7 | ,, | 15·79 | 537·2 | 720·2 | 16·68 | 531·4 | ,, | 14·11 | 529·5 | 697·7 |
| 50 | 20·11 | 534·2 | 712·0 | 13·77 | 528·9 | ,, | 16·15 | 531·1 | 696·5 | 14·44 | 529·9 | ,, |
| 55 | 19·89 | 534·8 | 712·5 | 08·53 | 539·3 | 721·9 | 15·65 | 530·6 | 696·6 | 14·64 | 529·4 | 691·6 |
| | | 5h. | | | 9h. | | | 13h. | | | 17h. | |
| 0 | 25 19·89 | 536·0 | 712·1 | 25 04·82 | 549·1 | 714·7 | 25 15·44 | 530·2 | 696·2 | 25 14·37 | 529·8 | 688·9 |
| 5 | 19·64 | 536·8 | ,, | 04·34 | 558·8 | 712·9 | 15·38 | 530·4 | 696·3 | 13·90 | 529·3 | 696·5 |
| 10 | 19·59 | 536·2 | 712·0 | 08·11 | 553·9 | 715·6 | 15·64 | 529·9 | 6967 | 13·83 | 529·3 | 701·8 |
| 15 | 19·56 | 535·9 | 713·8 | 09·86 | 547·8 | 716·3 | 15·61 | 530·2 | ,, | 13·50 | 528·7 | 705·4 |
| 20 | 19·44 | 535·5 | ,, | 10·51 | 544·8 | 714·6 | 15·85 | 529·6 | 696·7 | 13·19 | 528·8 | 711·2 |
| 25 | 19·51 | 535·1 | 713·9 | 11·42 | 544·3 | 712·7 | 15·52 | 528·8 | 696·5 | 13·00 | 529·1 | 703·7 |
| 30 | 19·51 | 538·4 | ,, | 12·78 | 540·8 | ,, | 15·34 | 528·6 | 697·7 | 12·69 | 529·1 | 700·3 |
| 35 | 19·79 | 540·8 | 711·9 | 13·50 | 540·0 | 709·7 | 15·59 | 528·6 | 697·9 | 12·63 | 529·1 | 696·4 |
| 40 | 20·02 | 541·6 | 711·0 | 14·35 | 539·1 | 708·2 | 15·39 | 528·7 | 697·4 | 12·58 | 528·6 | 705·1 |
| 45 | 19·88 | 540·1 | 712·5 | 15·44 | 535·0 | 708·0 | 15·05 | 528·4 | 697·6 | 12·40 | 528·3 | 710·1 |
| 50 | 19·81 | 539·2 | 711·9 | 15·58 | 534·3 | 706·3 | 14·80 | 529·0 | ,, | 12·06 | 528·1 | 718·3 |
| 55 | 19·12 | 536·2 | ,, | 15·85 | 534·2 | 704·3 | 14·80 | 528·9 | ,, | 12·09 | 528·0 | 715·0 |

BIFILAR. Observed $2^m$ after the Declination, $k=0{\cdot}000140$. BALANCE. Observed $3^m$ after the Declination, $k=0{\cdot}0000085$.

The temperature of the bifilar and balance magnets, and the observers' initials, will be found at the corresponding hours in the Hourly Observations of Magnetometers.

When double commas (,,) occur in the column for the balance magnetometer, the needle was examined, and no change from the previous observation being appreciable, the micrometers were not altered.

| Göttingen Mean Time of Declination Observation. | JUNE 19, 20. | | | | | | | | | | | |
|---|---|---|---|---|---|---|---|---|---|---|---|---|
| | DECLINATION. | BIFILAR Corrected. | BALANCE Corrected. | DECLINATION. | BIFILAR Corrected. | BALANCE Corrected. | DECLINATION. | BIFILAR Corrected. | BALANCE Corrected. | DECLINATION. | BIFILAR Corrected. | BALANCE Corrected. |
| Min. | ° ′ | Sc. Div. | Mic. Div. | ° ′ | Sc. Div. | Mic. Div. | ° ′ | Sc. Div. | Mic. Div. | ° ′ | Sc. Div. | Mic. Div. |
| | | 18h. | | | 22h. | | | 2h | | | 6h. | |
| 0 | 25 12·01 | 527·2 | 716·9 | 23 13·81 | 516·3 | 694·0 | 25 22·47 | 531·7 | 691·5 | 25 16·95 | 541·8 | 698·4 |
| 5 | 12·13 | 527·2 | 711·4 | 14·11 | 516·7 | ,, | 22·40 | 531·8 | ,, | 16·60 | 542·0 | 697·8 |
| 10 | 11·89 | 526·6 | 719·0 | 14·50 | 516·3 | 693·4 | 22·45 | 531·7 | 692·1 | 16·41 | 542·4 | 697·2 |
| 15 | 11·51 | 526·5 | 713·9 | 14·51 | 517·1 | 692·1 | 22·30 | 532·4 | 691·4 | 16·28 | 542·6 | ,, |
| 20 | 11·49 | 526·0 | 715·7 | 14·82 | 516·4 | 692·1 | 22·33 | 533·0 | 691·2 | 16·35 | 543·7 | 696·9 |
| 25 | 11·75 | 526·1 | 718·4 | 15·07 | 515·8 | 691·6 | 22·30 | 533·6 | 690·3 | 16·39 | 543·6 | 694·9 |
| 30 | 11·89 | 526·3 | 709·4 | 15·32 | 515·7 | ,, | 22·37 | 533·7 | 690·7 | 16·50 | 543·5 | ,, |
| 35 | 12·28 | 526·1 | 697·6 | 15·38 | 515·5 | 691·3 | 22·50 | 534·4 | ,, | 16·43 | 543·1 | 696·1 |
| 40 | 12·46 | 525·1 | 704·7 | 15·47 | 515·5 | ,, | 22·53 | 535·6 | ,, | 16·73 | 542·9 | 696·9 |
| 45 | 12·25 | 524·4 | 704·9 | 15·94 | 514·5 | 690·8 | 22·51 | 535·8 | ,, | 16·57 | 542·2 | ,, |
| 50 | 12·38 | 524·0 | 705·6 | 16·35 | 514·5 | 689·1 | 22·45 | 536·0 | ,, | 16·39 | 541·0 | ,, |
| 55 | 12·06 | 524·0 | 705·4 | 16·43 | 514·5 | ,, | 22·30 | 536·5 | 692·0 | 16·70 | 543·6 | 697·8 |
| | | 19h. | | | 23h. | | | 3h. | | | 7h. | |
| 0 | 25 12·01 | 524·1 | 705·4 | 25 16·30 | 515·3 | 687·9 | 25 22·27 | 536·3 | 693·1 | 25 16·63 | 545·2 | ,, |
| 5 | 12·56 | 524·9 | 705·3 | 16·68 | 517·2 | 687·7 | 22·33 | 537·4 | ,, | 16·82 | 542·6 | 699·1 |
| 10 | 12·85 | 524·6 | 709·7 | 16·43 | 517·7 | ,, | 22·50 | 537·0 | ,, | 16·82 | 543·5 | 699·6 |
| 15 | 12·69 | 523·7 | 703·9 | 16·84 | 517·6 | 689·2 | 22·57 | 537·3 | ,, | 17·20 | 542·4 | ,, |
| 20 | 12·69 | 523·3 | 706·9 | 17·47 | 518·1 | ,, | 22·53 | 538·4 | 693·1 | 17·19 | 542·1 | 701·0 |
| 25 | 12·70 | 524·0 | 707·2 | 17·81 | 518·5 | 688·3 | 22·72 | 539·9 | 693·4 | 17·46 | 543·4 | 700·9 |
| 30 | 12·92 | 523·6 | 697·6 | 18·03 | 518·0 | ,, | 22·50 | 539·8 | ,, | 17·63 | 541·4 | 700·5 |
| 35 | 13·30 | 523·8 | 697·2 | 17·96 | 518·9 | 688·4 | 22·35 | 538·5 | ,, | 17·67 | 544·5 | 699·9 |
| 40 | 13·36 | 522·5 | 698·4 | 18·30 | 518·7 | ,, | 22·45 | 538·2 | 695·7 | 17·46 | 543·8 | 698·8 |
| 45 | 13·32 | 522·9 | 705·6 | 18·81 | 519·7 | 689·1 | 22·24 | 537·9 | 696·7 | 17·49 | 543·2 | ,, |
| 50 | 13·16 | 523·2 | 701·0 | 18·97 | 518·7 | 690·8 | 22·24 | 538·2 | 697·2 | 17·70 | 543·5 | 698·3 |
| 55 | 13·03 | 522·8 | 696·5 | 19·32 | 518·4 | 690·9 | 22·04 | 539·2 | ,, | 17·58 | 542·8 | ,, |
| | | 20h. | | | 0h. | | | 4h. | | | 8h. | |
| 0 | 25 13·29 | 522·6 | 704·8 | 25 19·51 | 519·4 | 691·5 | 25 22·37 | 538·3 | 695·8 | 25 18·16 | 544·5 | 697·2 |
| 5 | 13·41 | 522·9 | 704·6 | 20·15 | 520·9 | 691·7 | 21·37 | 537·1 | 697·7 | 18·30 | 545·5 | 694·0 |
| 10 | 13·39 | 522·7 | 698·6 | 20·33 | 521·2 | 691·4 | 21·21 | 537·7 | ,, | 17·09 | 542·3 | 695·2 |
| 15 | 13·64 | 522·3 | 695·5 | 20·69 | 522·1 | 691·4 | 20·56 | 537·3 | 699·1 | 17·20 | 541·6 | 697·0 |
| 20 | 13·56 | 522·7 | 692·6 | 20·69 | 523·0 | 690·3 | 20·87 | 538·9 | ,, | 17·36 | 541·9 | 696·8 |
| 25 | 13·46 | 521·3 | 701·1 | 20·79 | 522·9 | 690·3 | 20·70 | 540·1 | 699·2 | 17·61 | 544·5 | 695·8 |
| 30 | 13·43 | 521·6 | 709·7 | 20·80 | 523·8 | 689·7 | 20·42 | 541·0 | ,, | 17·47 | 543·3 | ,, |
| 35 | 13·52 | 522·0 | 711·8 | 20·77 | 520·6 | 691·0 | 20·22 | 542·0 | 699·8 | 17·39 | 543·9 | 694·8 |
| 40 | 13·69 | 521·8 | 708·3 | 21·34 | 524·2 | 688·7 | 20·02 | 543·9 | ,, | 17·46 | 545·0 | 692·6 |
| 45 | 13·54 | 521·8 | 706·0 | 21·59 | 527·5 | 687·9 | 19·95 | 546·4 | 698·5 | 16·97 | 543·0 | 693·8 |
| 50 | 13·61 | 521·7 | 698·1 | 22·13 | 529·2 | 688·1 | 19·48 | 544·9 | ,, | 16·95 | 543·4 | 693·5 |
| 55 | 13·72 | 520·8 | 690·1 | 22·33 | 526·8 | 689·2 | 19·29 | 543·4 | 699·2 | 16·89 | 543·5 | ,, |
| | | 21h. | | | 1h. | | | 5h. | | | 9h. | |
| 0 | 25 13·47 | 520·4 | 698·1 | 25 21·53 | 527·8 | 689·3 | 25 19·14 | 542·6 | 699·5 | 25 16·73 | 543·4 | ,, |
| 5 | 13·57 | 520·5 | 698·5 | 22·17 | 528·5 | ,, | 18·82 | 541·7 | ,, | 16·87 | 544·2 | 693·8 |
| 10 | 13·41 | 519·8 | 697·4 | 22·24 | 525·7 | 691·8 | 18·79 | 541·8 | ,, | 16·43 | 539·8 | 695·2 |
| 15 | 13·72 | 519·1 | 697·6 | 22·25 | 525·7 | ,, | 18·43 | 541·4 | 700·1 | 16·35 | 539·7 | 695·9 |
| 20 | 13·36 | 519·2 | 697·7 | 22·20 | 524·5 | 692·9 | 18·16 | 541·4 | ,, | 16·90 | 542·8 | 694·8 |
| 25 | 13·14 | 519·5 | 697·2 | 22·44 | 525·8 | 692·4 | 18·16 | 541·1 | ,, | 16·82 | 544·5 | 691·7 |
| 30 | 13·25 | 519·0 | 696·4 | 22·44 | 526·8 | 691·7 | 18·10 | 541·4 | 700·8 | 16·89 | 541·5 | 692·6 |
| 35 | 13·27 | 518·5 | 695·5 | 22·47 | 528·5 | 691·3 | 17·86 | 541·7 | ,, | 15·88 | 544·5 | 690·6 |
| 40 | 12·90 | 518·1 | 693·7 | 22·31 | 529·3 | 691·0 | 17·56 | 540·9 | ,, | 15·32 | 544·0 | 689·3 |
| 45 | 13·23 | 519·2 | 693·5 | 22·38 | 531·1 | 691·2 | 17·56 | 541·2 | ,, | 14·77 | 546·5 | 685·7 |
| 50 | 13·52 | 518·5 | ,, | 22·53 | 530·7 | 691·4 | 17·44 | 540·2 | 699·5 | 13·99 | 549·6 | 682·8 |
| 55 | 14·06 | 518·1 | 693·5 | 22·45 | 530·4 | 692·0 | 17·37 | 540·1 | ,, | 14·03 | 550·9 | 680·5 |

BIFILAR. Observed 2m after the Declination, $k$=0·000140. BALANCE. Observed 3m after the Declination, $k$=0·0000085.

The temperature of the bifilar and balance magnets, and the observers' initials, will be found at the corresponding hours in the Hourly Observations of Magnetometers.

When double commas (,,) occur in the column for the balance magnetometer, the needle was examined, and no change from the previous observation being appreciable, the micrometers were not altered.

| Göttingen Mean Time of Declination Observation. | JULY 24, 25. | | | | | | | | | | | |
|---|---|---|---|---|---|---|---|---|---|---|---|---|
| | DECLINATION. | BIFILAR Corrected. | BALANCE Corrected. | DECLINATION. | BIFILAR Corrected. | BALANCE Corrected. | DECLINATION. | BIFILAR Corrected. | BALANCE Corrected. | DECLINATION. | BIFILAR Corrected. | BALANCE Corrected. |
| Min. | ° ′ | Sc. Div. | Mic. Div. | ° ′ | Sc. Div. | Mic. Div. | ° ′ | Sc. Div. | Mic. Div. | ° ′ | Sc. Div. | Mic. Div. |
| | | 10h. | | | 14h. | | | 18h. | | | 22h. | |
| 0 | 25 15·78 | 539·0 | 655·4 | 25 13·93 | 540·6 | ,, | 25 08·31 | 539·3 | 644·9 | 25 20·02 | 525·1 | 597·0 |
| 5 | 15·86 | 538·4 | 655·9 | 13·46 | 540·9 | 646·8 | 09·53 | 538·2 | 628·7 | 24·99 | 529·6 | 597·7 |
| 10 | 16·08 | 537·6 | 657·2 | 13·46 | 541·2 | ,, | 11·82 | 541·0 | 619·9 | 26·37 | 531·7 | 594·9 |
| 15 | 16·01 | 537·2 | 657·7 | 13·32 | 541·0 | 646·8 | 12·89 | 539·6 | 619·8 | 25·53 | 535·3 | 592·4 |
| 20 | 16·26 | 537·5 | 657·4 | 13·25 | 541·7 | 647·7 | 13·29 | 537·7 | 634·4 | 23·41 | 533·3 | 592·4 |
| 25 | 15·94 | 537·5 | 657·7 | 13·52 | 541·6 | ,, | 11·98 | 539·7 | 639·5 | 23·09 | 536·8 | 593·1 |
| 30 | 15·88 | 537·1 | 658·4 | 13·32 | 542·8 | 646·9 | 13·07 | 541·4 | 629·9 | 21·39 | 530·9 | 597·3 |
| 35 | 15·62 | 536·7 | 658·7 | 13·34 | 543·5 | ,, | 12·80 | 539·9 | 621·6 | 18·25 | 529·0 | 594·9 |
| 40 | 15·69 | 536·7 | 658·4 | 13·49 | 538·9 | 648·5 | 13·07 | 543·3 | ..... | 19·42 | 529·8 | 596·9 |
| 45 | 15·71 | 536·7 | 659·1 | 12·29 | 538·1 | 647·7 | ..... | ..... | ..... | 18·63 | 530·8 | 600·1 |
| 50 | 15·86 | 536·8 | 658·6 | 10·95 | 538·3 | 649·7 | 14·80 | 541·5 | ..... | 18·45 | 530·1 | 601·5 |
| 55 | 15·74 | 536·9 | 657·7 | 10·27 | 539·5 | ,, | 14·36 | 541·9 | 608·5 | 19·51 | 532·3 | 605·1 |
| | | 11h. | | | 15h. | | | 19h. | | | 23h. | |
| 0 | 25 15·69 | 536·5 | 657·8 | 25 10·95 | 540·5 | ,, | 25 13·02 | 538·2 | 611·8 | 25 19·12 | 529·7 | 599·9 |
| 5 | 15·79 | 536·8 | 657·3 | 11·07 | 540·7 | 649·0 | 12·73 | 537·6 | 614·5 | 18·75 | 529·2 | 601·4 |
| 10 | 15·78 | 536·5 | ,, | 11·08 | 541·8 | ,, | 13·76 | 538·1 | 615·8 | 17·40 | 530·0 | ,, |
| 15 | 15·98 | 537·4 | 657·0 | 10·97 | 540·4 | ,, | 14·64 | 539·9 | 613·9 | 18·38 | 529·6 | 603·1 |
| 20 | 15·64 | 535·8 | ,, | 11·81 | 543·1 | ,, | 15·05 | 538·9 | 615·1 | 19·96 | 527·0 | 609·5 |
| 25 | 15·83 | 536·7 | ,, | 12·82 | 545·3 | 646·2 | 14·38 | 532·7 | 620·5 | 19·76 | 528·3 | 610·0 |
| 30 | 15·51 | 536·1 | ,, | 12·96 | 543·7 | ,, | 14·38 | 528·1 | 616·2 | 20·47 | 529·7 | 613·3 |
| 35 | 15·56 | 535·9 | 656·3 | 12·80 | 543·0 | 645·0 | 15·12 | 526·8 | 618·7 | 21·59 | 526·5 | 615·2 |
| 40 | 15·99 | 536·0 | ,, | 12·11 | 545·8 | ,, | 16·12 | 526·1 | 621·6 | 21·84 | 521·9 | 617·5 |
| 45 | 15·85 | 536·0 | 656·4 | 11·69 | 544·5 | 642·8 | 15·69 | 525·8 | 623·0 | 24·06 | 529·4 | 615·7 |
| 50 | 15·61 | 536·0 | ,, | 10·77 | 542·6 | ,, | 17·44 | 526·7 | 621·6 | 24·60 | 529·4 | ,, |
| 55 | 15·54 | 535·8 | ,, | 10·83 | 540·8 | 645·9 | 14·68 | 520·1 | 626·7 | 25·09 | 529·4 | 613·2 |
| | | 12h. | | | 16h. | | | 20h. | | | 0h. | |
| 0 | 25 15·47 | 535·6 | 655·9 | 25 10·11 | 539·8 | ,, | 25 16·36 | 519·0 | 629·4 | 25 22·37 | 533·3 | 604·1 |
| 5 | 15·34 | 534·8 | ,, | 09·56 | 538·5 | 646·9 | 16·79 | 513·2 | 631·1 | 22·51 | 532·3 | 607·1 |
| 10 | 15·41 | 534·8 | ,, | 09·46 | 539·3 | ,, | 16·73 | 518·8 | 630·0 | 24·42 | 526·2 | 612·3 |
| 15 | 15·24 | 534·7 | ,, | 09·40 | 539·4 | ,, | 20·02 | 530·8 | 623·2 | 25·34 | 528·4 | 614·6 |
| 20 | 15·09 | 535·2 | 657·6 | 10·23 | 539·3 | 648·0 | 23·27 | 533·7 | 617·0 | 26·20 | 523·8 | 616·7 |
| 25 | 15·42 | 534·9 | 657·2 | 10·50 | 541·1 | ,, | 22·98 | 530·5 | 614·2 | 26·05 | 519·9 | 616·9 |
| 30 | 15·31 | 535·0 | ,, | 10·74 | 542·5 | ,, | 22·78 | 529·1 | 609·6 | 26·40 | 523·6 | ,, |
| 35 | 15·17 | 535·2 | ,, | 11·27 | 543·1 | 645·0 | 21·37 | 521·4 | 610·8 | 27·61 | 526·9 | 617·1 |
| 40 | 15·01 | 535·7 | 656·6 | 10·80 | 544·9 | ,, | 21·41 | 524·1 | 605·9 | 28·83 | 521·4 | 621·3 |
| 45 | 14·99 | 535·5 | ,, | 10·92 | 546·4 | 644·1 | 22·74 | 533·0 | 600·1 | 28·01 | 519·7 | 625·1 |
| 50 | 14·94 | 535·3 | ,, | 11·17 | 545·6 | ,, | 23·79 | 540·7 | 595·4 | 27·58 | 517·2 | ,, |
| 55 | 15·01 | 535·3 | 656·5 | 10·88 | 546·0 | ,, | 23·88 | 539·0 | 591·7 | 27·88 | 521·3 | 625·0 |
| | | 13h. | | | 17h. | | | 21h. | | | 1h. | |
| 0 | 25 14·80 | 534·9 | 655·0 | 25 10·90 | 545·6 | ,, | 25 23·83 | 546·1 | 585·8 | 25 27·58 | 524·7 | 624·4 |
| 5 | 14·80 | 534·8 | ,, | 10·11 | 549·0 | 642·6 | 25·46 | 542·9 | 587·9 | 27·53 | 527·0 | 627·1 |
| 10 | 14·80 | 534·4 | ,, | 11·81 | 543·0 | 643·2 | 25·61 | 538·1 | 588·5 | 28·58 | 528·8 | 628·9 |
| 15 | 14·77 | 550·4 | 648·4 | 11·25 | 540·3 | 643·4 | 24·80 | 532·4 | 588·1 | 28·42 | 539·1 | 628·8 |
| 20 | 16·05 | 542·1 | 648·5 | 09·39 | 541·9 | 643·7 | 25·24 | 530·9 | 589·4 | 26·68 | 534·1 | 632·4 |
| 25 | 15·22 | 539·8 | 649·1 | 10·68 | 542·2 | 641·5 | 23·68 | 535·2 | 584·5 | 25·63 | 532·9 | 637·6 |
| 30 | 14·18 | 539·1 | 648·5 | 10·00 | 547·7 | 645·0 | 25·36 | 536·7 | 585·9 | 24·82 | 531·0 | 642·6 |
| 35 | 14·08 | 539·4 | ,, | 07·94 | 545·5 | 638·3 | 25·74 | 539·9 | 586·1 | 24·08 | 532·0 | 645·4 |
| 40 | 14·08 | 538·9 | 648·9 | 11·89 | 546·2 | 640·7 | 23·27 | 530·4 | 587·7 | 23·65 | 527·9 | 651·3 |
| 45 | 13·88 | 539·6 | 648·0 | 15·44 | 540·3 | 640·7 | 22·74 | 528·9 | 589·9 | 24·15 | 528·9 | 654·7 |
| 50 | 13·83 | 540·8 | ,, | 08·52 | 538·1 | 642·0 | 19·48 | 522·5 | 593·0 | 24·10 | 519·7 | 660·3 |
| 55 | 13·84 | 540·7 | ,, | 07·60 | 538·3 | 646·0 | 19·32 | 516·4 | 595·3 | 24·42 | 518·8 | 661·9 |

BIFILAR. Observed 2m after the Declination, $k$=0·000140. BALANCE. Observed 3m after the Declination, $k$=0·0000085.

The temperature of the bifilar and balance magnets, and the observers' initials, will be found at the corresponding hours in the Hourly Observations of Magnetometers.

When double commas (,,) occur in the column for the balance magnetometer, the needle was examined, and no change from the previous observation being appreciable, the micrometers were not altered.

July 24d 18h 10m. A minute insect was seen creeping over the west cross-plate of the balance magnet, which, perhaps, has caused some motion in the needle! At 18h 45m the box was lifted from the instrument and the insect was removed.

| Göttingen Mean Time of Declination Observation. | July 24, 25. | | | | | | August 30, 31. | | | | | |
|---|---|---|---|---|---|---|---|---|---|---|---|---|
| | Declination. | Bifilar Corrected. | Balance Corrected. | Declination. | Bifilar Corrected. | Balance Corrected. | Declination. | Bifilar Corrected. | Balance Corrected. | Declination. | Bifilar Corrected. | Balance Corrected. |
| Min. | ° ′ | Sc. Div. | Mic. Div. | ° ′ | Sc. Div. | Mic. Div. | ° ′ | Sc. Div. | Mic. Div. | ° ′ | Sc. Div. | Mic. Div. |
| | | 2h. | | | 6h. | | | 10h. | | | 14h. | |
| 0 | 25 25·51 | 517·6 | 663·9 | 25 19·46 | 543·2 | 719·8 | 25 17·24 | 537·1 | 649·4 | 25 11·68 | 524·4 | 493·3 |
| 5 | 26·82 | 512·9 | 663·9 | 19·46 | 543·9 | 718·9 | 17·19 | 534·1 | 649·7 | 10·70 | 523·5 | 498·2 |
| 10 | 26·50 | 513·4 | 659·7 | 19·79 | 539·8 | ,, | 16·57 | 535·6 | 648·1 | 09·56 | 521·1 | 496·9 |
| 15 | 25·85 | 514·6 | 656·5 | 19·55 | 542·0 | 716·4 | 15·58 | 535·5 | 647·2 | 06·37 | 529·2 | 501·4 |
| 20 | 25·49 | 519·3 | 653·0 | 19·58 | 546·0 | 714·4 | 15·76 | 535·9 | 647·0 | 05·58 | 532·7 | 507·3 |
| 25 | 24·99 | 524·9 | 650·6 | 20·50 | 546·6 | ,, | 16·08 | 534·5 | 647·0 | 06·24 | 532·3 | 518·4 |
| 30 | 24·70 | 530·8 | 648·8 | 20·83 | 539·1 | 716·2 | 16·15 | 534·7 | ,, | 06·57 | 532·5 | 528·3 |
| 35 | 24·46 | 535·0 | 647·2 | 20·09 | 533·9 | ,, | 15·41 | 536·0 | 642·6 | 07·44 | 530·5 | 538·3 |
| 40 | 22·92 | 534·6 | 647·4 | 18·95 | 534·5 | 717·1 | 14·94 | 534·9 | 642·6 | 07·20 | 531·9 | 548·1 |
| 45 | 22·87 | 541·9 | 647·6 | 18·77 | 542·3 | 714·2 | 14·26 | 534·4 | 640·9 | 08·43 | 531·7 | 554·8 |
| 50 | 20·74 | 547·9 | 647·7 | 18·68 | 545·9 | 710·2 | 14·28 | 533·8 | 640·9 | 09·29 | 531·2 | 560·3 |
| 55 | 22·24 | 551·7 | 648·0 | 19·24 | 548·9 | 709·5 | 14·26 | 530·1 | 641·7 | 10·06 | 529·9 | ,, |
| | | 3h. | | | 7h. | | | 11h. | | | 15h. | |
| 0 | 25 21·68 | 540·7 | 656·9 | 25 20·23 | 544·4 | 710·0 | 25 14·06 | 534·5 | 638·3 | 25 10·45 | 527·5 | 570·1 |
| 5 | 20·77 | 535·2 | 662·9 | 20·35 | 545·8 | ,, | 13·46 | 538·7 | 634·3 | 10·00 | 528·4 | 574·6 |
| 10 | 21·63 | 534·5 | 666·1 | 21·04 | 549·1 | 709·6 | 12·90 | 538·6 | 629·3 | 11·01 | 528·5 | ,, |
| 15 | 22·08 | 538·0 | 663·5 | 20·18 | 548·0 | ,, | 11·95 | 539·6 | 628·5 | 11·05 | 528·7 | 575·1 |
| 20 | 23·24 | 548·3 | 662·9 | 18·84 | 546·0 | 709·1 | 11·66 | 539·1 | 626·2 | 10·51 | 528·2 | 577·4 |
| 25 | 22·96 | 550·5 | 664·7 | 18·21 | 545·5 | 712·7 | 11·41 | 539·3 | 625·6 | 09·89 | 528·0 | 579·7 |
| 30 | 22·98 | 551·7 | 664·9 | 17·94 | 537·0 | 719·7 | 10·97 | 540·7 | 624·0 | 09·33 | 529·3 | 584·0 |
| 35 | 22·77 | 550·3 | 669·3 | 15·67 | 532·5 | 724·2 | 11·68 | 542·3 | 621·4 | 09·62 | 529·9 | ,, |
| 40 | 22·28 | 546·2 | 673·6 | 14·24 | 532·1 | 728·1 | 12·82 | 539·6 | 620·3 | 09·47 | 530·0 | 591·5 |
| 45 | 22·11 | 546·5 | 676·6 | 13·46 | 535·6 | 727·7 | 13·67 | 533·8 | 619·8 | 09·59 | 531·2 | 595·0 |
| 50 | 22·31 | 549·8 | 677·9 | 15·36 | 527·9 | 734·1 | 12·63 | 531·6 | 618·2 | 11·03 | 530·8 | 599·5 |
| 55 | 24·06 | 543·5 | 685·5 | 13·99 | 527·4 | 737·2 | 11·51 | 529·3 | 616·8 | 11·54 | 531·0 | ,, |
| | | 4h. | | | 8h. | | | 12h. | | | 16h. | |
| 0 | 25 24·50 | 526·8 | 694·9 | 25 08·09 | 533·5 | 731·2 | 25 10·30 | 527·8 | 616·9 | 25 11·27 | 531·6 | 601·5 |
| 5 | 25·02 | 523·1 | 698·9 | 04·93 | 550·6 | 717·7 | 10·06 | 527·3 | 618·8 | 11·19 | 530·2 | 605·4 |
| 10 | 24·35 | 528·0 | 696·8 | 08·08 | 558·9 | 708·2 | 11·39 | 528·1 | 618·1 | 10·65 | 532·7 | ,, |
| 15 | 24·69 | 534·8 | 695·7 | 12·11 | 551·4 | 708·3 | 12·16 | 527·0 | 618·4 | 11·84 | 533·0 | 607·5 |
| 20 | 24·52 | 536·6 | 696·1 | 14·10 | 545·2 | 705·9 | 12·83 | 526·2 | 619·2 | 12·92 | 532·8 | ,, |
| 25 | 23·70 | 534·5 | 698·9 | 13·67 | 547·5 | 697·1 | 13·63 | 528·0 | 618·2 | 13·39 | 535·0 | 604·1 |
| 30 | 23·22 | 528·5 | 700·9 | 14·58 | 549·4 | 694·6 | 14·89 | 528·8 | 614·7 | 12·60 | 536·9 | 601·5 |
| 35 | 23·68 | 528·9 | 700·0 | 16·73 | 544·5 | 691·7 | 15·05 | 526·8 | 612·9 | 11·54 | 537·2 | 599·5 |
| 40 | 23·78 | 525·5 | 700·5 | 17·53 | 538·0 | 687·6 | 14·80 | 524·8 | 609·2 | 11·44 | 535·4 | 600·8 |
| 45 | 23·54 | 527·2 | 699·7 | 16·06 | 533·9 | ,, | 14·58 | 523·4 | 606·3 | 12·09 | 531·6 | 601·8 |
| 50 | 22·71 | 526·7 | 699·4 | 13·96 | 537·0 | 685·7 | 15·07 | 522·1 | 600·2 | 12·25 | 531·9 | 603·6 |
| 55 | 22·60 | 531·1 | 698·1 | 13·07 | 541·8 | 680·7 | 16·59 | 518·5 | 590·2 | 12·63 | 528·8 | ,, |
| | | 5h. | | | 9h. | | | 13h. | | | 17h. | |
| 0 | 25 21·24 | 536·7 | 696·7 | 25 13·22 | 545·0 | 675·9 | 25 21·12 | 524·9 | 572·8 | 25 12·62 | 530·5 | ,, |
| 5 | 20·79 | 540·9 | 696·7 | 15·32 | 544·0 | 677·3 | 28·30 | 518·6 | 552·2 | 12·48 | 530·7 | 603·5 |
| 10 | 20·16 | 545·2 | 698·1 | 16·99 | 537·5 | ,, | 32·02 | 509·5 | 523·5 | 12·85 | 528·4 | 605·1 |
| 15 | 19·79 | 547·0 | 699·5 | 16·03 | 535·8 | ,, | 33·03 | 503·9 | 499·2 | 12·56 | 529·4 | ,, |
| 20 | 19·44 | 550·4 | 701·8 | 14·68 | 538·2 | 675·3 | 30·94 | 497·6 | 478·6 | 13·36 | 528·3 | 604·9 |
| 25 | 18·14 | 549·7 | 706·2 | 14·71 | 541·9 | 672·2 | 26·99 | 489·5 | 462·7 | 13·39 | 528·2 | 605·3 |
| 30 | 17·15 | 546·2 | 712·4 | 15·94 | 543·1 | 671·5 | 22·13 | 493·3 | 454·7 | 14·64 | 528·1 | ,, |
| 35 | 16·97 | 546·1 | 716·1 | 17·26 | 538·1 | ,, | 18·50 | 502·8 | ,, | 15·54 | 526·1 | 605·7 |
| 40 | 17·31 | 544·0 | 718·7 | 16·53 | 536·3 | ,, | 14·78 | 509·0 | 458·3 | 18·23 | 525·5 | ,, |
| 45 | 18·84 | 539·6 | 722·0 | 15·38 | 539·0 | 670·2 | 13·16 | 514·9 | 465·5 | 19·12 | 523·2 | ,, |
| 50 | 18·72 | 537·0 | 722·5 | 15·62 | 540·6 | 666·9 | 13·00 | 520·4 | 474·8 | 20·27 | 519·7 | 603·6 |
| 55 | 19·02 | 537·9 | 722·3 | 15·67 | 540·7 | ,, | 12·42 | 523·7 | 485·8 | 22·64 | 516·6 | ,, |

BIFILAR. Observed $2^m$ after the Declination, $k=0{\cdot}000140$.

BALANCE. Observed $3^m$ after the Declination, $k=0{\cdot}0000085$.

The temperature of the bifilar and balance magnets, and the observers' initials, will be found at the corresponding hours in the Hourly Observations of Magnetometers.

When double commas (,,) occur in the column for the balance magnetometer, the needle was examined, and no change from the previous observation being appreciable, the micrometers were not altered.

| Göttingen Mean Time of Declination Observation. | August 30, 31. | | | | | | | | | | | |
|---|---|---|---|---|---|---|---|---|---|---|---|---|
| | Declination. | Bifilar Corrected. | Balance Corrected. | Declination. | Bifilar Corrected. | Balance Corrected. | Declination. | Bifilar Corrected. | Balance Corrected. | Declination. | Bifilar Corrected. | Balance Corrected. |
| Min. | ° ′ | Sc. Div. | Mic. Div. | ° ′ | Sc. Div. | Mic. Div. | ° ′ | Sc. Div. | Mic. Div. | ° ′ | Sc. Div. | Mic. Div. |
| | | 18h. | | | 22h. | | | 2h. | | | 6h. | |
| 0 | 25 24·57 | 512·1 | 603·6 | 25 17·76 | 507·6 | 620·4 | 25 26·14 | 527·5 | 653·9 | 25 17·37 | 535·8 | 660·0 |
| 5 | 25·43 | 510·1 | ,, | 18·81 | 507·5 | ,, | 27·04 | 534·9 | 651·4 | 17·42 | 535·6 | 660·3 |
| 10 | 25·67 | 512·2 | 596·7 | 20·27 | 506·4 | 622·3 | 28·18 | 538·2 | 650·4 | 17·24 | 536·5 | 658·2 |
| 15 | 25·06 | 516·5 | ,, | 20·15 | 503·4 | 624·3 | 27·79 | 536·2 | 650·2 | 17·27 | 536·7 | 657·1 |
| 20 | 24·39 | 520·3 | 591·4 | 19·68 | 506·4 | 621·2 | 27·48 | 531·7 | 650·6 | 17·24 | 538·9 | 655·9 |
| 25 | 23·43 | 523·8 | 587·4 | 17·93 | 506·9 | 620·6 | 26·55 | 527·3 | 651·4 | 17·20 | 539·1 | 655·0 |
| 30 | 22·45 | 524·7 | ,, | 18·00 | 506·6 | 620·8 | 25·96 | 524·5 | 652·1 | 17·06 | 538·8 | 654·8 |
| 35 | 22·25 | 524·7 | 588·5 | 17·06 | 506·0 | 622·3 | 25·43 | 526·8 | 651·3 | 16·95 | 538·1 | 654·8 |
| 40 | 21·48 | 525·3 | ,, | 17·83 | 506·4 | 623·9 | 26·05 | 526·8 | 651·5 | 16·87 | 536·0 | 655·2 |
| 45 | 21·46 | 526·5 | 589·3 | 18·23 | 507·3 | 626·2 | 24·72 | 528·2 | 648·6 | 17·12 | 536·1 | 655·0 |
| 50 | 20·42 | 523·3 | ,, | 18·77 | 508·2 | 627·4 | 25·20 | 527·5 | 648·5 | 17·09 | 536·9 | 654·7 |
| 55 | 17·60 | 525·9 | 590·0 | 19·61 | 511·0 | 628·8 | 24·84 | 527·3 | 649·3 | 16·99 | 537·4 | 654·4 |
| | | 19h. | | | 23h. | | | 3h. | | | 7h. | |
| 0 | 25 15·76 | 525·2 | 593·3 | 25 20·25 | 512·1 | 629·6 | 25 24·75 | 526·2 | 649·9 | 25 16·79 | 537·0 | 654·7 |
| 5 | 13·49 | 527·0 | ,, | 20·67 | 513·0 | 631·4 | 24·08 | 526·7 | 650·1 | 16·80 | 541·9 | 651·9 |
| 10 | 12·45 | 530·3 | 597·3 | 20·52 | 516·0 | 632·3 | 23·56 | 528·4 | 649·2 | 17·02 | 542·3 | 650·8 |
| 15 | 14·06 | 532·5 | 600·8 | 20·55 | 516·7 | 633·3 | 23·43 | 529·8 | 648·0 | 16·79 | 540·9 | 650·5 |
| 20 | 14·26 | 532·2 | 603·3 | 20·36 | 519·3 | 633·3 | 23·54 | 531·5 | 649·2 | 16·55 | 543·6 | 650·7 |
| 25 | 15·27 | 530·4 | 605·7 | 21·73 | 518·0 | 633·9 | 23·32 | 531·7 | 652·0 | 16·95 | 546·5 | 652·7 |
| 30 | 15·56 | 528·8 | 607·4 | ..... | 520·7 | 633·8 | 23·36 | 528·4 | 654·2 | 16·84 | 545·1 | 653·4 |
| 35 | 15·24 | 528·8 | 608·1 | 23·11 | 519·4 | 634·8 | 22·69 | 529·2 | 655·2 | 16·53 | 542·2 | 653·9 |
| 40 | 14·73 | 528·0 | 610·7 | 22·18 | 521·0 | 632·9 | 21·50 | 530·2 | 655·9 | 15·17 | 541·1 | 655·5 |
| 45 | 14·06 | 526·7 | ,, | 23·12 | 522·0 | 632·9 | 20·74 | 537·5 | 655·0 | 14·17 | 540·4 | 657·2 |
| 50 | 15·47 | 526·5 | 614·8 | 23·78 | 518·5 | 635·2 | 20·00 | 537·0 | 657·4 | 13·20 | 537·9 | 660·8 |
| 55 | 15·54 | 522·4 | 618·0 | 23·34 | 516·6 | 633·4 | 19·64 | 541·8 | 657·4 | 11·48 | 536·8 | 663·3 |
| | | 20h. | | | 0h. | | | 4h. | | | 8h. | |
| 0 | 25 14·43 | 523·4 | 618·7 | 25 23·65 | 517·9 | 635·0 | 25 19·73 | 544·4 | ,, | 25 10·75 | 534·2 | 665·6 |
| 5 | 14·70 | 520·3 | 620·8 | 24·35 | 517·8 | 634·0 | 18·99 | 538·9 | 662·2 | 10·34 | 535·7 | ,, |
| 10 | 13·32 | 521·6 | ,, | 25·07 | 519·4 | 633·5 | 18·87 | 539·0 | 662·7 | 10·97 | 535·5 | 667·2 |
| 15 | 12·13 | 521·4 | 622·2 | 25·04 | 515·8 | 635·6 | 19·10 | 542·2 | 662·1 | 12·28 | 532·7 | 666·9 |
| 20 | 12·25 | 521·4 | 624·3 | 25·31 | 515·9 | 636·4 | 19·42 | 546·4 | 660·7 | 12·18 | 530·7 | 668·3 |
| 25 | 13·17 | 521·3 | 627·0 | 25·68 | 517·2 | 636·2 | 19·55 | 544·6 | 662·3 | 11·30 | 531·4 | 666·7 |
| 30 | 14·26 | 521·3 | 629·7 | 26·54 | 515·9 | 637·2 | 18·65 | 537·3 | 662·1 | 11·34 | 533·8 | 666·1 |
| 35 | 15·88 | 521·3 | 630·8 | 25·83 | 516·9 | 636·9 | 18·21 | 532·9 | 662·5 | 12·78 | 535·3 | 665·2 |
| 40 | 15·01 | 519·6 | ,, | 25·54 | 516·0 | 637·2 | 18·55 | 529·1 | 663·1 | 14·50 | 535·5 | 663·4 |
| 45 | 14·99 | 520·9 | ,, | 25·33 | 520·9 | 636·0 | 18·99 | 522·6 | 663·8 | 15·36 | 534·4 | 661·5 |
| 50 | 14·87 | 523·0 | 629·3 | 25·40 | 524·2 | 637·4 | 19·58 | 523·3 | 665·1 | 15·54 | 532·0 | 660·1 |
| 55 | 15·51 | 520·0 | ,, | 25·40 | 527·8 | 637·4 | 19·24 | 522·3 | 663·4 | 15·24 | 531·5 | 658·9 |
| | | 21h. | | | 1h. | | | 5h. | | | 9h. | |
| 0 | 25 14·53 | 518·1 | 630·2 | 25 26·01 | 528·0 | ,, | 25 16·90 | 524·9 | 663·2 | 25 15·91 | 532·7 | 657·2 |
| 5 | 14·87 | 517·9 | ,, | 26·16 | 527·6 | 641·8 | 15·99 | 532·3 | 661·5 | 16·23 | 532·3 | 654·9 |
| 10 | 15·54 | 513·5 | 630·8 | 25·68 | 527·0 | ,, | 15·78 | 537·3 | 659·6 | 16·05 | 531·6 | 653·6 |
| 15 | 15·59 | 512·7 | ,, | 25·90 | 531·8 | 643·9 | 16·43 | 545·0 | 657·6 | 15·92 | 531·6 | 651·2 |
| 20 | 15·41 | 514·1 | 629·5 | 26·55 | 531·4 | 646·9 | 16·35 | 541·1 | 658·2 | 16·72 | 532·5 | 649·5 |
| 25 | 16·82 | 516·3 | ,, | 26·55 | 531·5 | 649·6 | 16·01 | 539·0 | 658·6 | 16·15 | 533·1 | 647·1 |
| 30 | 17·94 | 514·3 | 628·2 | 25·85 | 531·9 | 650·9 | 16·28 | 538·9 | 659·3 | 15·69 | 531·6 | 646·2 |
| 35 | 16·55 | 513·1 | ,, | 26·27 | 536·1 | ,, | 16·70 | 540·9 | 659·2 | 16·05 | 531·3 | 644·9 |
| 40 | 17·02 | 511·8 | 625·2 | 26·38 | 536·1 | ,, | 17·09 | 538·7 | 659·6 | 15·39 | 531·4 | 642·8 |
| 45 | 16·79 | 512·4 | ,, | 26·03 | 533·6 | 654·0 | 16·79 | 535·4 | 660·1 | 15·44 | 532·2 | 641·4 |
| 50 | 17·33 | 510·9 | 623·2 | 26·25 | 529·4 | 656·0 | 16·72 | 533·8 | 659·8 | 15·49 | 530·8 | 640·6 |
| 55 | 17·15 | 509·3 | ,, | 26·61 | 528·0 | 655·6 | 17·37 | 536·5 | 658·3 | 15·27 | 531·3 | 638·9 |

BIFILAR. Observed $2^m$ after the Declination, $k=0{\cdot}000140$. BALANCE. Observed $3^m$ after the Declination, $k=0{\cdot}0000085$.

The temperature of the bifilar and balance magnets, and the observers' initials, will be found at the corresponding hours in the Hourly Observations of Magnetometers.

When double commas (,,) occur in the column for the balance magnetometer, the needle was examined, and no change from the previous observation being appreciable, the micrometers were not altered.

| Göttingen Mean Time of Declination Observation. | September 18, 19. | | | | | | | | | | | |
|---|---|---|---|---|---|---|---|---|---|---|---|---|
| | Declination. | Bifilar Corrected. | Balance Corrected. | Declination. | Bifilar Corrected. | Balance Corrected. | Declination. | Bifilar Corrected. | Balance Corrected. | Declination. | Bifilar Corrected. | Balance Corrected. |
| Min. | ° ′ | Sc. Div. | Mic. Div. | ° ′ | Sc. Div. | Mic. Div. | ° ′ | Sc. Div. | Mic. Div. | ° ′ | Sc. Div. | Mic. Div. |
| | | 10h. | | | 14h. | | | 18h. | | | 22h. | |
| 0 | 25 12·55 | 545·8 | 632·0 | 25 16·97 | 538·4 | 617 1 | 25 15·61 | 534·8 | 627·9 | 25 15·86 | 523·5 | 636·7 |
| 5 | 13·59 | 542·9 | 632·7 | 16·60 | 536·9 | 619·1 | 15·54 | 535·3 | 627·9 | 16·12 | 522·7 | 638·2 |
| 10 | 14·41 | 539·6 | 633·0 | 16·82 | 535·8 | 619·6 | 15·39 | 535·2 | 628·2 | 15·99 | 523·0 | ,, |
| 15 | 14·87 | 537·7 | 634·6 | 16·82 | 535·9 | 618·6 | 15·17 | 535·6 | ,, | 16·18 | 523·7 | ,, |
| 20 | 15·59 | 535·4 | 632·8 | 16·63 | 536·1 | 617·3 | 15·07 | 531·2 | ,, | 16·52 | 524·2 | 637·6 |
| 25 | 16·05 | 535·2 | ,, | 16·12 | 535·8 | 617·2 | 15·07 | 536·1 | 629·0 | 16·77 | 524·8 | ,, |
| 30 | 16·45 | 535·0 | 630·9 | 16·13 | 535·6 | 617·5 | 14·98 | 535·5 | 629·4 | 17·04 | 524·4 | ,, |
| 35 | 16·82 | 535·4 | ,, | 15·32 | 535·6 | ,, | 14·84 | 535·8 | 630·1 | 17·65 | 524·6 | 639·0 |
| 40 | 16·92 | 535·3 | 628·5 | 15·27 | 534·8 | ,, | 14·77 | 536·2 | 630·8 | 18·10 | 525·0 | ,, |
| 45 | 16·95 | 536·1 | ,, | 15·44 | 533·8 | ,, | 15·07 | 535·7 | 631·4 | 18·20 | 523·2 | ,, |
| 50 | 16·80 | 536·2 | 626·3 | 15·45 | 533·4 | 617·8 | 14·53 | 535·5 | 630·4 | 18·35 | 522·0 | 639·4 |
| 55 | 16·68 | 536·5 | ,, | 15·64 | 533·4 | ,, | 14·58 | 535·3 | 630·8 | 18·23 | 522·4 | ,, |
| | | 11h. | | | 15h. | | | 19h. | | | 23h. | |
| 0 | 25 16·72 | 537·4 | ,, | 25 15·45 | 533·8 | 616·5 | 25 14·67 | 535·2 | 629·4 | 25 17·26 | 522·6 | 639·8 |
| 5 | 17·17 | 541·2 | 623·6 | 14·80 | 536·0 | 616·5 | 14·80 | 535·0 | 630·8 | 18·92 | 523·0 | ,, |
| 10 | 17·71 | 542·1 | 623·5 | 14·38 | 537·6 | 615·3 | 14·35 | 534·5 | 630·6 | 18·99 | 521·4 | ,, |
| 15 | 17·91 | 540·8 | 622·3 | 13·50 | 535·9 | 615·5 | 13·66 | 536·1 | ,, | 18·90 | 519·8 | 639·8 |
| 20 | 17·65 | 539·4 | 621·5 | 13·12 | 533·9 | 616·0 | 14·28 | 537·5 | ,, | 19·12 | 518·6 | ,, |
| 25 | 17·13 | 538·5 | 620·0 | 12·35 | 531·9 | 616·7 | 15·02 | 536·3 | 630·7 | 19·61 | 519·5 | ,, |
| 30 | 16·65 | 537·9 | ,, | 11·59 | 531·2 | 619·0 | 15·32 | 535·1 | 631·3 | 20·23 | 520·2 | 638·8 |
| 35 | 16·25 | 536·3 | 621·1 | 12·35 | 531·9 | 621·0 | 15·36 | 534·3 | ,, | 20·82 | 519·6 | ,, |
| 40 | 15·83 | 536·9 | ,, | 13·49 | 530·8 | 622·0 | 15·02 | 532·2 | 632·1 | 21·14 | 519·4 | ,, |
| 45 | 15·98 | 536·8 | ,, | 14·26 | 531·2 | 621·3 | 14·60 | 532·0 | ,, | 21·51 | 518·9 | 637·8 |
| 50 | 15·89 | 534·7 | 623·4 | 14·64 | 531·6 | ,, | 14·60 | 531·7 | 632·1 | 21·53 | 517·8 | ,, |
| 55 | 16·05 | 535·2 | ,, | 14·46 | 530·8 | ,, | 14·80 | 530·9 | ,, | 22·13 | 518·6 | 635·9 |
| | | 12h. | | | 16h. | | | 20h. | | | 0h. | |
| 0 | 25 16·06 | 535·2 | ,, | 25 14·30 | 531·6 | 621·3 | 25 14·67 | 530·9 | 634·5 | 25 22·24 | 516·3 | 636·1 |
| 5 | 16·12 | 535·2 | 622·6 | 14·26 | 532·3 | ,, | 14·71 | 530·0 | 635·7 | 22·20 | 516·0 | ,, |
| 10 | 16·26 | 537·2 | ,, | 13·79 | 532·8 | ,, | 14·75 | 528·3 | 635·2 | 22·84 | 515·6 | ,, |
| 15 | 17·13 | 538·8 | 621·8 | 13·72 | 533·6 | 621·3 | 14·40 | 529·7 | 634·5 | 23·29 | 516·1 | 635·7 |
| 20 | 17·80 | 538·2 | ,, | 13·49 | 534·0 | 621·4 | 14·43 | 529·2 | 634·5 | 23·70 | 518·0 | ,, |
| 25 | 17·60 | 537·6 | 618·7 | 13·46 | 534·9 | 621·4 | 14·11 | 528·7 | ,, | 23·66 | 516·4 | 634·9 |
| 30 | 17·22 | 538·4 | 618·3 | 13·69 | 535·3 | ,, | 13·90 | 529·3 | 634·6 | 24·12 | 514·7 | ,, |
| 35 | 17·61 | 538·1 | ,, | 13·50 | 535·6 | 621·8 | 14·20 | 529·1 | ,, | 24·22 | 515·5 | 634·6 |
| 40 | 17·84 | 537·1 | ,, | 13·57 | 535·8 | ,, | 14·40 | 528·7 | ,, | 24·72 | 518·8 | ,, |
| 45 | 17·51 | 537·1 | 616·9 | 13·39 | 535·5 | 621·8 | 14·08 | 528·0 | ,, | 24·86 | 519·7 | ,, |
| 50 | 17·12 | 536·8 | 619·6 | 13·46 | 536·2 | 621·7 | 14·37 | 528·3 | 635·1 | 24·89 | 518·7 | 631·7 |
| 55 | 16·50 | 536·5 | 617·7 | 13·83 | 535·9 | 622·8 | 14·30 | 526·8 | ,, | 24·82 | 517·5 | ,, |
| | | 13h. | | | 17h. | | | 21h. | | | 1h. | |
| 0 | 25 16·12 | 536·4 | ,, | 25 13·52 | 535·7 | 622·7 | 25 13·90 | 527·1 | 634·6 | 25 24·75 | 517·5 | 631·6 |
| 5 | 15·32 | 536·5 | ,, | 13·49 | 536·4 | ,, | 13·74 | 527·6 | ,, | 24·89 | 518·8 | ,, |
| 10 | 14·85 | 536·3 | ,, | 13·88 | 536·5 | 624·0 | 13·74 | 527·6 | ,, | 24·89 | 521·4 | ,, |
| 15 | 14·48 | 536·4 | 617·9 | 14·08 | 536·5 | 624·2 | 14·18 | 528·0 | ,, | 25·38 | 523·4 | 631·4 |
| 20 | 14·60 | 536·2 | ,, | 14·30 | 535·9 | 624·3 | 13·79 | 528·4 | 634·0 | 25·33 | 522·9 | ,, |
| 25 | 14·91 | 536·4 | 618·6 | 14·46 | 554·8 | 624·8 | 15·32 | 527·4 | ,, | 25·04 | 523·4 | 631·2 |
| 30 | 15·07 | 536·1 | 620·2 | 14·60 | 535·5 | 625·3 | 15·79 | 525·6 | 636·2 | 25·19 | 523·2 | ,, |
| 35 | 15·20 | 536·1 | ,, | 15·07 | 533·9 | 626·4 | 15·71 | 524·3 | 637·2 | 24·87 | 524·1 | ,, |
| 40 | 15·65 | 537·1 | ,, | 15·45 | 533·1 | 627·2 | 15·58 | 524·0 | 636·9 | 24·91 | 523·5 | 633·3 |
| 45 | 16·77 | 538·7 | 619·8 | 15·34 | 533·1 | 627·4 | 15·54 | 524·4 | ,, | 24·86 | 521·2 | ,, |
| 50 | 17·09 | 538·8 | ,, | 15·24 | 533·9 | 627·4 | 15·81 | 524·3 | 637·3 | 24·28 | 519·1 | ,, |
| 55 | 17·33 | 539·5 | 617·8 | 15·44 | 534·9 | 627·4 | 15·89 | 523·7 | ,, | 24·30 | 519·1 | ,, |

BIFILAR. Observed $2^m$ after the Declination, $k=0{\cdot}000140$. BALANCE. Observed $3^m$ after the Declination, $k=0{\cdot}0000085$.

The temperature of the bifilar and balance magnets, and the observers' initials, will be found at the corresponding hours in the Hourly Observations of Magnetometers.

When double commas (,,) occur in the column for the balance magnetometer, the needle was examined, and no change from the previous observation being appreciable, the micrometers were not altered.

| Göttingen Mean Time of Declination Observation. | September 18, 19. | | | | | | October 23, 24. | | | | | |
|---|---|---|---|---|---|---|---|---|---|---|---|---|
| | Declination. | Bifilar Corrected. | Balance Corrected. | Declination. | Bifilar Corrected. | Balance Corrected. | Declination. | Bifilar Corrected. | Balance Corrected. | Declination. | Bifilar Corrected. | Balance Corrected. |
| Min. | ° ′ | Sc. Div. | Mic. Div. | ° ′ | Sc. Div. | Mic. Div. | ° ′ | Sc. Div. | Mic. Div. | ° ′ | Sc. Div. | Mic. Div. |
| | | 2h. | | | 6h. | | | 10h. | | | 14h. | |
| 0 | 25 24·05 | 518·6 | 637·5 | 25 17·40 | 540·2 | 638·4 | 25 09·00 | 535·3 | 628·8 | 25 12·67 | 532·0 | ,, |
| 5 | 23·72 | 518·4 | ,, | 17·39 | 540·2 | ,, | 08·92 | 535·1 | ,, | 13·10 | 528·8 | 570·9 |
| 10 | 23·63 | 516·6 | ,, | 17·39 | 540·2 | ,, | 09·46 | 533·1 | ,, | 12·75 | 527·5 | ,, |
| 15 | 23·52 | 518·8 | 640·2 | 17·34 | 540·0 | 636·9 | 09·54 | 530·2 | 628·4 | 12·15 | 527·7 | 573·4 |
| 20 | 23·48 | 518·2 | ,, | 16·89 | 540·4 | ,, | 08·95 | 529·0 | ,, | 12·06 | 527·2 | ,, |
| 25 | 23·01 | 518·1 | 642·5 | 16·89 | 540·3 | ,, | 08·63 | 528·9 | ,, | 11·77 | 527·7 | 575·8 |
| 30 | 22·82 | 520·4 | ,, | 16·97 | 540·4 | ,, | 08·73 | 529·3 | ,, | 11·34 | 527·6 | ,, |
| 35 | 22·89 | 523·9 | ,, | 16·89 | 540·7 | 636·0 | 09·12 | 530·1 | 627·9 | 11·37 | 527·8 | 577·3 |
| 40 | 22·80 | 526·3 | 642·8 | 16·89 | 541·3 | ,, | 10·18 | 530·2 | ,, | 11·71 | 529·4 | ,, |
| 45 | 22·28 | 527·3 | ,, | 16·86 | 541·5 | ,, | 11·07 | 527·5 | ,, | 12·13 | 530·8 | 578·0 |
| 50 | 22·20 | 529·3 | ,, | 16·82 | 541·5 | 635·2 | 12·06 | 525·1 | ,, | 12·60 | 532·0 | ,, |
| 55 | 22·17 | 531·3 | ,, | 16·82 | 541·5 | ,, | 12·75 | 525·9 | 625·9 | 12·31 | 532·6 | ,, |
| | | 3h. | | | 7h. | | | 11h. | | | 15h. | |
| 0 | 25 21·54 | 530·6 | 644·5 | 25 16·82 | 541·1 | 634·8 | 25 13·52 | 527·1 | ,, | 25 11·96 | 533·4 | ,, |
| 5 | 21·57 | 532·5 | ,, | 16·62 | 541·5 | ,, | 13·09 | 529·5 | 618·7 | 11·72 | 533·2 | ,, |
| 10 | 21·44 | 533·5 | 645·2 | 15·72 | 542·2 | ,, | 13·43 | 532·4 | 615·4 | 11·42 | 532·5 | 580·4 |
| 15 | 21·54 | 534·8 | ,, | 16·21 | 543·3 | 634·2 | 12·93 | 531·8 | 611·7 | 11·32 | 532·2 | 581·1 |
| 20 | 21·43 | 532·5 | 645·6 | 16·16 | 543·5 | ,, | 12·16 | 534·4 | 607·0 | 11·05 | 531·7 | ,, |
| 25 | 21·76 | 533·8 | ,, | 16·21 | 543·4 | ,, | 10·74 | 532·3 | 603·9 | 10·83 | 531·5 | 583·1 |
| 30 | 21·70 | 533·0 | 645·8 | 16·10 | 542·6 | 633·5 | 10·09 | 531·2 | 603·3 | 10·90 | 531·5 | ,, |
| 35 | 21·71 | 534·9 | ,, | 16·26 | 541·6 | ,, | 08·83 | 530·0 | 600·1 | 11·22 | 530·8 | 585·7 |
| 40 | 21·66 | 535·4 | 644·0 | 16·21 | 540·3 | 633·1 | 07·40 | 529·7 | 598·0 | 11·71 | 530·9 | ,, |
| 45 | 21·59 | 535·2 | ,, | 16·57 | 540·0 | ,, | 07·05 | 531·2 | 597·3 | 11·84 | 531·5 | 587·0 |
| 50 | 21·46 | 534·7 | 644·1 | 16·57 | 543·2 | ,, | 08·99 | 530·1 | ,, | 12·02 | 531·2 | ,, |
| 55 | 21·26 | 535·5 | ,, | 16·39 | 542·8 | ,, | 11·62 | 525·9 | 596·7 | 12·04 | 532·1 | ,, |
| | | 4h. | | | 8h. | | | 12h. | | | 16h. | |
| 0 | 25 21·29 | 535·0 | 643·8 | 25 16·48 | 542·6 | 632·4 | 25 12·33 | 523·0 | 593·7 | 25 12·60 | 532·5 | 588·5 |
| 5 | 20·82 | 535·3 | ,, | 16·32 | 541·0 | 632·4 | 12·45 | 523·3 | 589·4 | 12·78 | 532·7 | ,, |
| 10 | 20·74 | 536·4 | 644·1 | 16·08 | 542·4 | 633·0 | 12·20 | 523·3 | 586·3 | 13·14 | 532·7 | 589·6 |
| 15 | 20·82 | 535·6 | ,, | 15·94 | 540·9 | 634·1 | 14·13 | 522·4 | ,, | 13·56 | 532·5 | ,, |
| 20 | 20·76 | 536·2 | 644·7 | 15·71 | 539·8 | 635·1 | 15·11 | 522·2 | ,, | 13·44 | 533·6 | 590·0 |
| 25 | 20·67 | 536·2 | ,, | 15·71 | 539·5 | 635·6 | 16·50 | 524·3 | ,, | 13·91 | 533·5 | ,, |
| 30 | 20·22 | 534·7 | 644·9 | 12·95 | 533·9 | 636·0 | 17·31 | 526·9 | 583·2 | 13·83 | 533·1 | ,, |
| 35 | 20·13 | 534·7 | 644·3 | 08·80 | 529·5 | 639·3 | 18·48 | 531·4 | 580·5 | 13·50 | 533·4 | 591·5 |
| 40 | 19·98 | 535·4 | 643·6 | 04·55 | 529·3 | 642·5 | 19·34 | 532·0 | 576·5 | 13·36 | 533·9 | ,, |
| 45 | 19·66 | 535·0 | 643·1 | 00·96 | 534·4 | 643·7 | 18·52 | 533·7 | 572·8 | 13·17 | 534·2 | ,, |
| 50 | 19·46 | 535·7 | 642·1 | 00·58 | 542·0 | 643·9 | 16·87 | 531·3 | 569·9 | 12·85 | 534·2 | 591·7 |
| 55 | 19·28 | 536·7 | 641·5 | 02·66 | 546·0 | 643·9 | 14·60 | 531·7 | 569·0 | 13·05 | 534·1 | ,, |
| | | 5h. | | | 9h. | | | 13h. | | | 17h. | |
| 0 | 25 18·92 | 537·1 | 640·0 | 25 05·03 | 543·8 | 644·1 | 25 13·52 | 530·4 | 569·1 | 25 12·69 | 534·0 | ,, |
| 5 | 18·81 | 537·9 | 641·0 | 06·71 | 542·3 | 643·0 | 12·78 | 530·0 | ,, | 12·69 | 534·6 | 594·6 |
| 10 | 18·81 | 537·8 | 640·9 | 08·85 | 540·3 | 640·9 | 12·28 | 529·3 | 569·0 | 13·09 | 534·6 | 595·5 |
| 15 | 18·67 | 538·2 | 639·7 | 10·61 | 537·6 | 639·6 | 12·09 | 527·8 | 570·8 | 13·25 | 534·4 | 595·7 |
| 20 | 18·30 | 538·6 | 639·7 | 11·41 | 536·7 | 637·3 | 12·23 | 529·2 | ,, | 13·46 | 533·9 | 596·1 |
| 25 | 18·16 | 538·5 | ,, | 12·08 | 537·6 | 635·1 | 13·05 | 530·3 | 571·3 | 13·34 | 533·4 | 596·4 |
| 30 | 18·08 | 537·8 | 639·6 | 12·76 | 537·0 | 632·9 | 13·32 | 530·6 | ,, | 13·39 | 533·0 | ,, |
| 35 | 17·91 | 538·4 | 638·8 | 13·96 | 536·6 | 631·3 | 12·51 | 531·7 | 568·6 | 13·41 | 533·5 | 598·1 |
| 40 | 17·54 | 538·8 | 638·2 | 14·75 | 535·4 | 630·4 | 11·96 | 532·9 | 566·6 | 13·52 | 533·5 | 598·2 |
| 45 | 17·46 | 539·3 | ,, | 14·80 | 535·2 | 629·3 | 11·75 | 534·0 | ,, | 13·86 | 532·7 | 599·1 |
| 50 | 17·46 | 539·3 | 638·4 | 14·80 | 536·2 | 627·0 | 12·16 | 532·8 | 568·7 | 13·67 | 533·3 | 598·8 |
| 55 | 17·42 | 540·2 | ,, | 15·11 | 536·4 | 625·2 | 12·35 | 531·3 | ,, | 13·50 | 533·6 | 599·0 |

BIFILAR. Observed 2m after the Declination, $k=0{\cdot}000140$.

BALANCE. Observed 3m after the Declination, $k=0{\cdot}0000085$.

The temperature of the bifilar and balance magnets, and the observers' initials will be found at the corresponding hours in the Hourly Observations of Magnetometers.

When double commas (,,) occur in the column for the balance magnetometer, the needle was examined, and no change from the previous observation being appreciable, the micrometers were not altered.

| Göttingen Mean time of Declination Observation. | October 23, 24. | | | | | | | | | | | |
|---|---|---|---|---|---|---|---|---|---|---|---|---|
| | Declination. | Bifilar Corrected. | Balance Corrected. | Declination. | Bifilar Corrected. | Balance Corrected. | Declination. | Bifilar Corrected. | Balance Corrected. | Declination. | Bifilar Corrected. | Balance Corrected. |
| Min. | ° ′ | Sc. Div. | Mic. Div. | ° ′ | Sc. Div. | Mic. Div. | ° ′ | Sc. Div. | Mic. Div. | ° ′ | Sc. Div. | Mic. Div. |
| | | 18h. | | | 22h. | | | 2h. | | | 6h. | |
| 0 | 25 13·52 | 533·1 | 599·5 | 25 14·41 | 521·5 | 611·0 | 25 19·91 | 526·8 | 625·2 | 25 13·74 | 534·8 | 619·9 |
| 5 | 13·69 | 533·3 | 600·2 | 14·53 | 521·0 | 611·6 | 20·02 | 528·1 | ,, | 13·94 | 534·2 | 619·3 |
| 10 | 13·67 | 533·0 | 600·7 | 14·60 | 520·9 | 611·2 | 19·95 | 527·8 | ,, | 13·90 | 534·2 | 618·7 |
| 15 | 13·57 | 533·6 | 600·9 | 14·80 | 520·9 | 611·4 | 19·88 | 528·2 | ,, | 13·97 | 533·9 | 617·6 |
| 20 | 13·72 | 533·3 | 601·9 | 15·25 | 520·9 | ,, | 19·51 | 527·8 | ,, | 13·93 | 534·3 | 617·4 |
| 25 | 13·43 | 532·6 | 602·5 | 15·47 | 520·9 | ,, | 19·62 | 527·7 | 630·2 | 14·17 | 534·3 | 615·7 |
| 30 | 13·67 | 532·1 | 603·3 | 15·54 | 520·3 | 610·9 | 19·55 | 527·6 | ,, | 14·13 | 534·2 | 615·6 |
| 35 | 13·52 | 531·8 | 603·0 | 15·62 | 520·6 | ,, | 19·42 | 528·2 | ,, | 14·13 | 534·6 | ,, |
| 40 | 13·66 | 532·5 | 604·1 | 15·96 | 520·5 | ,, | 19·48 | 529·2 | 631·3 | 14·10 | 534·2 | 615·3 |
| 45 | 13·69 | 532·7 | 603·8 | 16·03 | 520·5 | ,, | 19·41 | 529·9 | ,, | 13·96 | 534·8 | 615·5 |
| 50 | 14·20 | 531·9 | 605·1 | 16·41 | 520·9 | 610·1 | 19·44 | 529·7 | ,, | 13·99 | 534·7 | 614·6 |
| 55 | 14·40 | 529·7 | 606·2 | 16·59 | 521·0 | ,, | 19·55 | 528·5 | ,, | 13·83 | 534·7 | ,, |
| | | 19h. | | | 23h. | | | 3h. | | | 7h. | |
| 0 | 25 14·33 | 528·6 | 607·0 | 25 17·09 | 521·4 | 611·1 | 25 19·26 | 528·2 | 633·9 | 25 13·88 | 534·8 | 614·3 |
| 5 | 13·99 | 528·7 | 607·5 | 17·39 | 521·4 | 611·5 | 19·10 | 528·2 | ,, | 13·88 | 535·0 | ,, |
| 10 | 13·79 | 529·2 | 607·5 | 17·42 | 520·8 | ,, | 18·77 | 527·6 | 634·1 | 13·96 | 535·4 | 613·8 |
| 15 | 14·20 | 527·9 | 609·5 | 17·73 | 521·4 | 612·1 | 18·10 | 527·4 | 632·0 | 13·99 | 535·3 | ,, |
| 20 | 13·50 | 528·8 | 607·2 | 18·23 | 521·2 | 612·1 | 18·05 | 527·8 | ,, | 13·93 | 535·1 | 613·0 |
| 25 | 13·27 | 530·9 | 607·5 | 18·27 | 520·9 | 611·7 | 17·76 | 528·1 | 632·4 | 13·86 | 535·1 | 611·8 |
| 30 | 13·96 | 529·8 | 607·2 | 18·52 | 521·5 | 611·0 | 17·34 | 527·9 | 630·9 | 13·84 | 535·2 | ,, |
| 35 | 13·91 | 529·7 | 605·3 | 18·63 | 521·6 | 610·5 | 17·36 | 529·2 | 631·8 | 13·83 | 535·4 | ,, |
| 40 | 13·22 | 531·6 | 604·8 | 18·84 | 521·7 | ,, | 17·07 | 529·5 | 631·3 | 13·86 | 535·5 | 610·9 |
| 45 | 13·69 | 530·4 | 605·9 | 18·90 | 522·3 | ,, | 16·57 | 530·4 | 629·9 | 13·79 | 535·2 | ,, |
| 50 | 13·64 | 528·2 | 606·1 | 19·14 | 523·1 | ,, | 16·48 | 531·8 | 629·8 | 13·81 | 535·1 | 611·9 |
| 55 | 12·96 | 528·6 | 605·6 | 19·39 | 522·3 | 610·5 | 16·45 | 532·4 | ,, | 13·84 | 535·2 | ,, |
| | | 20h. | | | 0h. | | | 4h. | | | 8h. | |
| 0 | 25 13·12 | 530·6 | 605·5 | 25 19·82 | 525·2 | 609·8 | 25 16·30 | 532·9 | 629·6 | 25 13·72 | 535·3 | ,, |
| 5 | 12·63 | 530·6 | 606·1 | 20·40 | 525·0 | ,, | 16·23 | 533·1 | ,, | 13·72 | 535·1 | 610·4 |
| 10 | 13·14 | 530·6 | 606·6 | 20·87 | 524·3 | 610·9 | 16·21 | 533·2 | 629·1 | 13·76 | 535·0 | 612·2 |
| 15 | 12·76 | 530·3 | 606·6 | 20·67 | 524·0 | ,, | 16·10 | 533·5 | 628·9 | 13·72 | 535·0 | 612·3 |
| 20 | 13·39 | 530·7 | 606·3 | 20·89 | 525·3 | 613·2 | 16·10 | 533·5 | 628·3 | 13·69 | 535·0 | ,, |
| 25 | 13·20 | 528·9 | 607·0 | 21·27 | 524·9 | ,, | 16·01 | 533·7 | 627·0 | 13·66 | 535·1 | ,, |
| 30 | 13·25 | 528·4 | 607·0 | ..... | 525·9 | ,, | 15·76 | 533·8 | 626·5 | 13·59 | 535·2 | 612·7 |
| 35 | 13·14 | 529·7 | 606·5 | 21·07 | 525·3 | 615·9 | 15·39 | 533·7 | 625·8 | 13·61 | 535·0 | 611·9 |
| 40 | 13·69 | 530·4 | 606·1 | 20·58 | 525·3 | 616·9 | 15·24 | 534·2 | 626·0 | 13·57 | 534·9 | 611·9 |
| 45 | 14·13 | 529·6 | 606·3 | 21·06 | 525·0 | 616·5 | 15·27 | 535·2 | 625·0 | 13·57 | 534·9 | 611·5 |
| 50 | 13·97 | 528·4 | 607·1 | 20·45 | 525·3 | ,, | 15·14 | 534·6 | 624·5 | 13·56 | 534·5 | 611·8 |
| 55 | 13·76 | 527·4 | 607·0 | 20·29 | 524·5 | 619·8 | 15·04 | 534·3 | 623·8 | 13·50 | 534·3 | 611·6 |
| | | 21h. | | | 1h. | | | 5h. | | | 9h. | |
| 0 | 25 13·69 | 527·0 | 607·4 | 25 20·40 | 524·2 | 620·0 | 25 15·02 | 534·9 | 622·5 | 25 13·47 | 534·4 | 611·6 |
| 5 | 13·79 | 527·0 | 607·7 | 20·15 | 524·1 | ,, | 14·78 | 535·2 | 622·1 | 13·52 | 534·6 | 611·2 |
| 10 | 13·83 | 526·5 | 607·7 | 20·16 | 523·6 | 621·2 | 14·55 | 535·0 | 622·6 | 13·48 | 534·6 | ,, |
| 15 | 13·67 | 525·2 | 609·4 | 19·75 | 523·0 | ,, | 14·24 | 534·9 | 622·1 | 13·47 | 534·9 | 610·9 |
| 20 | 13·46 | 525·2 | 608·9 | 19·79 | 522·5 | ,, | 14·20 | 535·2 | 622·2 | 13·49 | 535·1 | ,, |
| 25 | 13·56 | 525·2 | 609·1 | 19·41 | 521·8 | ,, | 14·15 | 535·3 | 621·3 | 13·56 | 534·7 | 611·7 |
| 30 | 13·76 | 525·5 | 509·3 | 19·56 | 523·3 | 623·4 | 14·04 | 535·1 | 620·9 | 13·56 | 534·7 | ,, |
| 35 | 14·11 | 524·3 | 609·2 | 19·86 | 524·5 | ,, | 13·81 | 535·4 | 621·5 | 13·56 | 534·5 | 611·5 |
| 40 | 14·08 | 524·0 | 609·0 | 19·56 | 523·6 | ,, | 13·69 | 535·5 | 620·5 | 13·54 | 534·5 | ,, |
| 45 | 14·17 | 522·7 | 610·1 | 19·78 | 524·5 | 625·0 | 13·47 | 535·6 | 620·5 | 13·52 | 534·1 | ,, |
| 50 | 14·20 | 522·2 | 611·0 | 19·98 | 524·5 | ,, | 13·76 | 535·3 | 620·3 | 13·59 | 534·1 | ,, |
| 55 | ..... | 522·1 | 610·7 | 19·73 | 525·9 | ,, | 13·76 | 535·0 | 619·1 | 13·49 | 533·5 | 611·4 |

BIFILAR. Observed 2m after the Declination, $k=0{\cdot}000140$.

BALANCE. Observed 3m after the Declination, $k=0{\cdot}0000085$.

The temperature of the bifilar and balance magnets, and the observers' initials, will be found at the corresponding hours in the Hourly Observations of Magnetometers.

When double commas (,,) occur in the column for the balance magnetometer, the needle was examined, and no change from the previous observation being appreciable, the micrometers were not altered.

| Göttingen Mean Time of Declination Observation. | November 29, 30. | | | | | | | | | | | |
|---|---|---|---|---|---|---|---|---|---|---|---|---|
| | Declination. | Bifilar Corrected. | Balance Corrected. | Declination. | Bifilar Corrected. | Balance Corrected. | Declination. | Bifilar Corrected. | Balance Corrected. | Declination. | Bifilar Corrected. | Balance Corrected. |
| Min. | ° ′ | Sc. Div. | Mic. Div. | ° ′ | Sc. Div. | Mic. Div. | ° ′ | Sc. Div. | Mic. Div. | ° ′ | Sc. Div. | Mic. Div. |
| | | 10h. | | | 14h. | | | 18h. | | | 22h. | |
| 0 | 25 10·92 | 535·7 | 617·6 | 25 15·85 | 537·1 | 604·3 | 25 15·01 | 537·0 | 615·4 | 25 14·46 | 534·0 | 613·5 |
| 5 | 10·41 | 538·6 | 616·7 | 16·10 | 535·8 | ,, | 14·94 | 537·0 | ,, | 14·57 | 534·0 | 613·7 |
| 10 | 10·50 | 538·4 | 616·6 | 15·96 | 535·3 | 600·3 | 15·01 | 537·8 | ,, | 14·20 | 533·5 | 613·5 |
| 15 | 10·27 | 538·3 | 617·5 | 15·32 | 534·7 | 599·7 | 14·80 | 538·1 | 614·8 | 14·58 | 533·1 | ,, |
| 20 | 10·74 | 539·3 | 616·7 | 14·58 | 535·1 | 601·4 | 14·65 | 538·5 | ,, | 14·53 | 533·6 | 612·8 |
| 25 | 10·87 | 539·3 | 617·0 | 14·46 | 535·0 | ,, | 14·55 | 538·5 | ,, | 14·60 | 534·3 | 612·6 |
| 30 | 11·15 | 541·6 | 615·4 | 14·37 | 534·7 | 602·6 | 14·57 | 538·1 | 615·2 | 15·11 | 533·8 | 612·3 |
| 35 | 10·28 | 542·7 | 614·1 | 14·35 | 534·7 | 604·3 | 14·46 | 537·7 | ,, | 15·31 | 532·9 | 612·1 |
| 40 | 09·60 | 542·9 | 613·0 | 14·48 | 534·7 | ,, | 14·01 | 538·3 | ,, | 15·01 | 533·3 | ,, |
| 45 | 09·26 | 543·2 | 612·7 | 14·70 | 535·2 | 606·2 | 14·33 | 539·1 | ,, | 15·20 | 533·4 | ,, |
| 50 | 09·76 | 543·6 | 612·9 | 14·89 | 534·5 | 607·3 | 14·18 | 538·3 | 615·3 | 15·41 | 533·4 | 610·6 |
| 55 | 11·28 | 544·2 | ,, | 14·98 | 535·3 | ,, | 14·46 | 538·3 | ,, | 15·36 | 333·0 | 610·9 |
| | | 11h. | | | 15h. | | | 19h. | | | 23h. | |
| 0 | 25 12·83 | 539·5 | 613·3 | 25 15·25 | 534·3 | ,, | 25 14·33 | 538·0 | 615·2 | 25 15·32 | 532·7 | 610·6 |
| 5 | 12·92 | 536·4 | 613·2 | 15·34 | 534·5 | 608·7 | 14·01 | 537·7 | ,, | 15·64 | 532·6 | 610·6 |
| 10 | 12·62 | 535·4 | ,, | 15·34 | 535·2 | 607·6 | 13·63 | 539·0 | ,, | 15·24 | 532·3 | 610·9 |
| 15 | 12·70 | 534·4 | 613·6 | 14·55 | 535·5 | 607·9 | 14·06 | 538·8 | ,, | 15·44 | 532·6 | ,, |
| 20 | 12·46 | 534·1 | 615·3 | 15·11 | 535·5 | 607·3 | 14·10 | 538·7 | 615·5 | 15·91 | 532·7 | 611·4 |
| 25 | 12·51 | 535·1 | 614·5 | 14·91 | 535·8 | 607·6 | 13·49 | 538·1 | ,, | 15·99 | 532·7 | 611·4 |
| 30 | 12·28 | 535·5 | 614·5 | 14·91 | 535·6 | 607·8 | 13·91 | 537·9 | ,, | 16·21 | 533·4 | ,, |
| 35 | 12·26 | 537·2 | 613·6 | 14·87 | 535·8 | 606·9 | 13·49 | 538·1 | 615·1 | 16·41 | 532·7 | 611·7 |
| 40 | 12·42 | 538·5 | 612·4 | 14·82 | 535·7 | 610·7 | 13·52 | 538·6 | ,, | 16·68 | 532·6 | 612·1 |
| 45 | 13·00 | 537·9 | 611·0 | 14·71 | 535·8 | 609·4 | 14·06 | 538·5 | ,, | 16·63 | 533·4 | 612·1 |
| 50 | 13·59 | 537·0 | 610·2 | 15·11 | 535·1 | 610·4 | 14·18 | 538·2 | 614·9 | 16·72 | 533·0 | 612·2 |
| 55 | 13·79 | 535·3 | 610·5 | 15·04 | 535·5 | ,, | 14·23 | 537·9 | ,, | 16·36 | 532·5 | 610·9 |
| | | 12h. | | | 16h. | | | 20h. | | | 0h. | |
| 0 | 25 13·86 | 534·4 | 610·2 | 25 14·98 | 535·8 | 611·1 | 25 14·23 | 537·8 | 615·2 | 25 16·45 | 534·0 | 610·7 |
| 5 | 13·97 | 534·3 | 612·1 | 14·84 | 535·8 | ,, | 14·23 | 537·9 | ,, | 16·66 | 532·9 | 610·6 |
| 10 | 13·70 | 534·6 | 612·6 | 14·55 | 536·0 | 611·4 | 14·13 | 537·7 | ,, | 16·43 | 532·8 | 610·1 |
| 15 | 13·76 | 534·8 | 612·1 | 14·43 | 536·4 | ,, | 14·24 | 537·5 | ,, | 16·39 | 533·4 | 609·9 |
| 20 | 13·41 | 535·6 | 611·5 | 14·48 | 535·9 | 612·2 | 14·24 | 537·5 | 616·4 | 16·66 | 533·1 | 610·0 |
| 25 | 13·36 | 536·3 | 611·5 | 14·46 | 535·7 | 612·7 | 14·26 | 536·9 | ,, | 16·35 | 532·7 | 609·7 |
| 30 | 13·70 | 537·1 | 611·1 | 14·67 | 537·0 | 613·4 | 14·18 | 537·0 | ,, | 16·26 | 532·5 | 610·3 |
| 35 | 13·72 | 536·1 | 611·0 | 14·77 | 536·8 | 612·5 | 14·30 | 536·7 | 617·2 | 16·03 | 532·2 | 609·8 |
| 40 | 13·79 | 536·2 | 611·9 | 14·80 | 536·9 | ,, | 14·35 | 536·4 | ,, | 16·06 | 532·4 | 609·7 |
| 45 | 14·40 | 535·3 | 611·8 | 14·80 | 538·8 | 613·8 | 14·13 | 534·4 | ,, | 16·41 | 532·9 | 609·7 |
| 50 | 14·30 | 535·2 | 611·6 | 14·80 | 536·6 | 612·4 | 13·25 | 537·9 | 615·9 | 16·53 | 533·3 | 609·7 |
| 55 | 14·03 | 534·9 | ,, | 14·91 | 536·5 | ,, | 14·13 | 537·1 | ,, | 16·80 | 534·1 | 609·4 |
| | | 13h. | | | 17h. | | | 21h. | | | 1h. | |
| 0 | 25 14·10 | 536·6 | 610·9 | 25 15·01 | 537·2 | 613·0 | 25 14·20 | 536·2 | 616·0 | 25 17·31 | 534·6 | 609·4 |
| 5 | 14·13 | 536·8 | 609·8 | 14·98 | 536·9 | 613·2 | 13·94 | 535·2 | ,, | 17·61 | 535·4 | ,, |
| 10 | 14·13 | 535·5 | ,, | 14·71 | 537·1 | 613·6 | 14·01 | 534·6 | ,, | 18·00 | 534·5 | 608·3 |
| 15 | 14·21 | 535·4 | 609·5 | 14·60 | 536·9 | 612·8 | 13·83 | 534·2 | 616·0 | 17·68 | 534·1 | ,, |
| 20 | 13·97 | 534·9 | 609·4 | 14·48 | 536·8 | ,, | 13·94 | 535·3 | ,, | 17·49 | 534·3 | 608·4 |
| 25 | 14·18 | 535·5 | 610·1 | 14·44 | 536·9 | 612·8 | 14·20 | 535·1 | ,, | 17·60 | 533·9 | ,, |
| 30 | 14·71 | 534·3 | 609·1 | 14·37 | 536·7 | ,, | 14·37 | 535·3 | 615·8 | 17·81 | 534·1 | ,, |
| 35 | 14·46 | 536·7 | 610·1 | 14·23 | 536·6 | 614·2 | 14·38 | 534·3 | ,, | 17·83 | 534·2 | 609·2 |
| 40 | 15·07 | 536·2 | 608·2 | 14·40 | 536·8 | ,, | 14·46 | 533·8 | ,, | 17·84 | 534·5 | ,, |
| 45 | 15·20 | 535·9 | ,, | 14·43 | 536·9 | ,, | 14·08 | 534·3 | 615·2 | 17·93 | 535·2 | 609·3 |
| 50 | 14·84 | 534·9 | 606·1 | 14·41 | 537·2 | 615·2 | 14·37 | 534·3 | ,, | 17·94 | 535·1 | 608·6 |
| 55 | 14·94 | 536·4 | ,, | 14·75 | 537·2 | 614·3 | 14·68 | 534·7 | ,, | 17·73 | 534·9 | 609·3 |

BIFILAR. Observed 2m after the Declination, $k$=0·000140. BALANCE. Observed 3m after the Declination, $k$=0·0000085.

The temperature of the bifilar and balance magnets, and the observers' initials, will be found at the corresponding hours in the Hourly Observations of Magnetometers.

When double commas (,,) occur in the column for the balance magnetometer, the needle was examined, and no change from the previous observation being appreciable, the micrometers were not altered.

| Göttingen Mean Time of Declination Observation. | November 29, 30. | | | | | | December 18, 19. | | | | | |
|---|---|---|---|---|---|---|---|---|---|---|---|---|
| | Declination. | Bifilar Corrected. | Balance Corrected. | Declination. | Bifilar Corrected. | Balance Corrected. | Declination. | Bifilar Corrected. | Balance Corrected. | Declination. | Bifilar Corrected. | Balance Corrected. |
| Min. | ° ′ | Sc. Div. | Mic. Div. | ° ′ | Sc. Div. | Mic. Div. | ° ′ | Sc. Div. | Mic. Div. | ° ′ | Sc. Div. | Mic. Div. |
| | | 2h. | | | 6h. | | | 10h. | | | 14h. | |
| 0 | 25 17·65 | 535·6 | 610·6 | 25 14·64 | 540·5 | 610·4 | 25 14·01 | 540·5 | 595·6 | 25 13·91 | 538·0 | ,, |
| 5 | 17·98 | 535·6 | ,, | 14·71 | 540·5 | ,, | 13·72 | 540·8 | ,, | 14·33 | 537·9 | ,, |
| 10 | 17·56 | 534·9 | 613·3 | 14·64 | 540·5 | 610·2 | 13·72 | 540·4 | 598·0 | 14·35 | 538·7 | 584·6 |
| 15 | 17·36 | 535·0 | 613·1 | 14·68 | 540·3 | ,, | 13·52 | 539·8 | ,, | 14·37 | 537·8 | ,, |
| 20 | 17·22 | 535·7 | ,, | 14·58 | 540·3 | 611·2 | 13·64 | 540·5 | 598·0 | 13·83 | 536·9 | 582·9 |
| 25 | 17·06 | 536·2 | ,, | 14·51 | 540·4 | 610·0 | 13·41 | 539·9 | ,, | 13·44 | 536·4 | 583·2 |
| 30 | 16·89 | 536·1 | 613·7 | 14·43 | 540·7 | 609·8 | 13·12 | 539·6 | ,, | 13·43 | 536·4 | 583·1 |
| 35 | 16·55 | 535·1 | ,, | 14·41 | 540·6 | 609·3 | 13·12 | 539·8 | ,, | 13·72 | 536·3 | 584·3 |
| 40 | 16·52 | 535·2 | ,, | 14·40 | 540·4 | 609·7 | 12·92 | 539·1 | 599·7 | 14·40 | 537·0 | 585·6 |
| 45 | 16·55 | 535·8 | 613·6 | 14·38 | 540·7 | ,, | 12·76 | 539·0 | ,, | 15·04 | 538·4 | 583·3 |
| 50 | 16·15 | 536·2 | ,, | 14·43 | 540·4 | 609·7 | 12·42 | 538·7 | 600·5 | 14·85 | 537·8 | 583·6 |
| 55 | 16·41 | 536·3 | ,, | 14·46 | 540·2 | 609·0 | 12·69 | 537·1 | ,, | 14·62 | 537·5 | ,, |
| | | 3h. | | | 7h. | | | 11h. | | | 15h. | |
| 0 | 25 16·05 | 536·4 | 614·2 | 25 14·40 | 540·0 | ,, | 25 12·25 | 537·8 | 603·8 | 25 14·53 | 537·8 | ,, |
| 5 | 16·33 | 537·6 | 614·2 | 14·33 | 540·4 | 609·3 | 11·77 | 537·5 | ,, | 14·65 | 538·5 | 582·7 |
| 10 | 16·30 | 537·7 | 615·0 | 14·30 | 540·2 | 608·0 | 11·77 | 537·7 | ,, | 14·71 | 539·1 | 582·1 |
| 15 | 16·43 | 537·2 | 614·2 | 14·24 | 539·8 | ,, | 12·16 | 536·7 | 603·7 | 14·80 | 539·2 | ,, |
| 20 | 16·13 | 536·7 | 614·1 | 14·37 | 539·7 | 609·2 | 11·95 | 535·7 | ,, | 14·84 | 539·3 | 581·9 |
| 25 | 15·94 | 536·7 | 613·9 | 14·21 | 539·4 | ,, | 11·66 | 535·2 | ,, | 14·91 | 538·9 | ,, |
| 30 | 16·01 | 537·2 | 614·1 | 14·06 | 539·2 | 609·2 | 11·48 | 532·7 | 603·0 | 14·60 | 539·5 | 580·6 |
| 35 | 16·03 | 537·3 | 614·2 | 14·13 | 538·8 | ,, | 11·41 | 532·6 | ,, | 14·57 | 540·2 | 580·7 |
| 40 | 15·76 | 537·4 | 614·3 | 14·10 | 539·0 | ,, | 10·92 | 531·7 | 601·7 | 14·53 | 540·3 | ,, |
| 45 | 15·59 | 537·7 | 614·3 | 13·96 | 538·8 | 608·1 | 10·13 | 532·9 | ,, | 14·46 | 540·5 | 580·4 |
| 50 | 15·81 | 538·0 | 614·4 | 13·94 | 538·7 | ,, | 09·02 | 537·0 | 598·8 | 14·58 | 540·6 | 580·1 |
| 55 | 15·59 | 537·6 | 614·5 | 14·06 | 538·0 | ,, | 08·16 | 547·5 | 595·2 | 14·87 | 540·7 | ,, |
| | | 4h. | | | 8h. | | | 12h. | | | 16h. | |
| 0 | 25 15·62 | 537·6 | 617·2 | 25 14·08 | 537·8 | 608·1 | 25 08·14 | 552·6 | 592·4 | 25 14·67 | 540·8 | 580·7 |
| 5 | 15·51 | 537·5 | 617·1 | 14·06 | 537·8 | ,, | 08·11 | 553·2 | 591·1 | 14·87 | 541·7 | ,, |
| 10 | 15·20 | 537·9 | 616·1 | 12·98 | 538·1 | ,, | 08·14 | 552·3 | 589·3 | 14·80 | 541·7 | 580·0 |
| 15 | 15·27 | 538·6 | 616·2 | 14·23 | 538·7 | 606·9 | 07·81 | 550·4 | 587·8 | 15·07 | 542·2 | ,, |
| 20 | 15·34 | 538·9 | 615·4 | 14·15 | 539·0 | ,, | 07·47 | 547·9 | ,, | 14·80 | 541·7 | 580·2 |
| 25 | 14·68 | 540·2 | 614·3 | 13·96 | 539·2 | ,, | 07·51 | 545·1 | 587·5 | 14·71 | 541·5 | 579·7 |
| 30 | 14·50 | 539·5 | 616·1 | 13·79 | 538·8 | ,, | 07·71 | 543·0 | ,, | 14·77 | 543·1 | ,, |
| 35 | 14·87 | 539·1 | 617·2 | 13·99 | 539·0 | 607·4 | 07·74 | 540·0 | 587·5 | 14·44 | 543·3 | 579·4 |
| 40 | 14·73 | 538·9 | 617·3 | 13·99 | 539·0 | ,, | 07·71 | 538·8 | ,, | 14·24 | 542·6 | ,, |
| 45 | 14·71 | 538·7 | 617·3 | 13·72 | 538·8 | ,, | 08·77 | 538·3 | 586·8 | 13·79 | 541·7 | 579·9 |
| 50 | 14·65 | 539·1 | 617·0 | 13·86 | 539·1 | ,, | 09·69 | 536·0 | ,, | 14·04 | 541·9 | 579·4 |
| 55 | 14·68 | 539·6 | 617·0 | 13·83 | 539·1 | ,, | 09·96 | 534·9 | ,, | 14·31 | 542·5 | ,, |
| | | 5h. | | | 9h. | | | 13h. | | | 17h. | |
| 0 | 25 14·43 | 540·2 | 617·1 | 25 13·76 | 539·1 | 607·0 | 25 10·48 | 535·0 | 586·7 | 25 14·37 | 542·9 | 579·9 |
| 5 | 14·30 | 540·7 | 616·9 | 13·69 | 538·9 | ,, | 11·10 | 535·9 | 586·6 | 14·70 | 541·9 | 581·2 |
| 10 | 14·77 | 541·1 | 615·5 | 13·52 | 539·6 | ,, | 11·95 | 536·1 | ,, | 14·67 | 541·7 | 581·6 |
| 15 | 14·64 | 539·8 | 615·7 | 13·59 | 540·0 | 605·7 | 12·90 | 535·8 | 585·9 | 14·85 | 541·0 | ,, |
| 20 | 14·82 | 539·1 | ,, | 13·52 | 539·8 | ,, | 13·46 | 536·6 | 584·5 | 14·73 | 541·8 | 581·2 |
| 25 | 14·85 | 538·0 | 616·9 | 13·52 | 539·3 | ,, | 14·08 | 536·5 | 584·6 | 14·82 | 542·8 | 580·7 |
| 30 | 14·91 | 539·2 | 615·8 | 13·56 | 539·1 | 606·4 | 14·11 | 535·5 | 583·0 | 14·71 | 542·6 | 580·4 |
| 35 | 14·70 | 539·8 | 615·3 | ..... | ..... | ..... | 13·72 | 536·9 | ,, | 14·50 | 543·4 | 580·9 |
| 40 | 14·57 | 539·9 | 614·3 | 13·41 | 539·2 | 606·8 | 14·13 | 538·1 | 583·0 | 14·67 | 543·4 | 581·0 |
| 45 | 14·84 | 540·1 | 615·9 | 13·39 | 539·5 | ,, | 14·89 | 538·3 | ,, | 14·67 | 543·4 | 580·6 |
| 50 | 14·60 | 540·2 | 613·8 | 13·49 | 539·1 | 606·4 | 14·67 | 537·5 | 582·3 | 14·33 | 543·2 | 579·8 |
| 55 | 14·62 | 540·3 | 612·3 | 13·05 | 538·9 | ,, | 14·30 | 537·2 | ,, | 14·03 | 543·3 | 579·4 |

BIFILAR. Observed 2m after the Declination, $k=0{\cdot}000140$.

BALANCE. Observed 3m after the Declination, $k=0{\cdot}0000085$.

The temperature of the bifilar and balance magnets, and the observers' initials, will be found at the corresponding hours in the Hourly Observations of Magnetometers.

When double commas (,,) occur in the column for the balance magnetometer, the needle was examined, and no change from the previous observation being appreciable, the micrometers were not altered.

| Göttingen Mean Time of Declination Observation. | December 18, 19. | | | | | | | | | | | |
|---|---|---|---|---|---|---|---|---|---|---|---|---|
| | Declination. | Bifilar Corrected. | Balance Corrected. | Declination. | Bifilar Corrected. | Balance Corrected. | Declination. | Bifilar Corrected. | Balance Corrected. | Declination. | Bifilar Corrected. | Balance Corrected. |
| Min. | ° ′ | Sc. Div. | Mic. Div. | ° ′ | Sc. Div. | Mic. Div. | ° ′ | Sc. Div. | Mic. Div. | ° ′ | Sc. Div. | Mic. Div. |
| | | 18h. | | | 22h. | | | 2h. | | | 6h. | |
| 0 | 25 13·99 | 543·4 | 579·2 | 25 22·01 | 543·2 | 573·3 | 25 18·07 | 536·3 | 595·0 | 25 15·09 | 535·0 | 627·1 |
| 5 | 13·96 | 543·5 | 579·6 | 21·90 | 542·6 | 573·1 | 18·41 | 536·3 | ,, | 15·74 | 532·8 | 625·6 |
| 10 | 14·03 | 543·6 | 579·6 | 21·39 | 541·1 | 573·4 | 17·94 | 537·1 | 595·3 | 15·81 | 531·0 | ,, |
| 15 | 13·99 | 543·6 | 580·1 | 20·20 | 538·7 | 572·9 | 18·20 | 536·9 | ,, | 15·64 | 531·8 | 624·3 |
| 20 | 14·06 | 543·2 | 579·5 | 19·42 | 536·0 | 574·4 | 17·93 | 536·0 | 597·4 | 15·45 | 530·9 | 623·7 |
| 25 | 14·06 | 542·8 | ,, | 18·99 | 535·9 | 575·3 | 18·23 | 537·3 | ,, | 14·23 | 534·7 | 621·9 |
| 30 | 13·86 | 543·1 | 579·0 | 18·82 | 535·0 | 575·6 | 18·16 | 536·2 | ,, | 14·96 | 536·4 | 620·8 |
| 35 | 13·90 | 543·2 | 579·6 | 18·97 | 534·5 | 577·8 | 17·71 | 534·1 | 598·0 | 16·13 | 533·8 | 620·9 |
| 40 | 14·64 | 542·5 | 579·7 | 18·82 | 534·7 | 573·1 | 17·40 | 534·7 | ,, | 16·18 | 532·0 | 621·6 |
| 45 | 14·17 | 542·4 | ,, | 19·05 | 533·7 | 578·8 | 17·26 | 535·3 | 598·2 | 16·26 | 531·6 | 622·0 |
| 50 | 14·55 | 541·1 | 580·7 | 18·43 | 533·4 | 578·9 | 16·82 | 535·7 | ,, | 15·81 | 534·2 | 620·6 |
| 55 | 14·43 | 541·5 | 580·3 | 18·54 | 533·1 | 577·0 | 16·86 | 535·1 | ,, | 15·99 | 535·8 | ,, |
| | | 19h. | | | 23h. | | | 3h. | | | 7h. | |
| 0 | 25 14·03 | 542·3 | 579·9 | 25 18·34 | 533·1 | 577·1 | 25 16·45 | 535·3 | 598·3 | 25 16·10 | 535·7 | 618·4 |
| 5 | 13·63 | 544·6 | 579·1 | 18·28 | 531·7 | 576·8 | 15·81 | 538·8 | ,, | 15·81 | 535·9 | 616·9 |
| 10 | 13·66 | 545·6 | 578·1 | 17·96 | 533·0 | 576·7 | 16·41 | 542·2 | 600·1 | 16·13 | 536·2 | 615·0 |
| 15 | 13·46 | 545·7 | 579·1 | 18·07 | 532·1 | 577·7 | 16·92 | 541·0 | ,, | 16·13 | 535·1 | ,, |
| 20 | 13·72 | 546·2 | 578·5 | 18·20 | 529·0 | 579·5 | 17·63 | 539·9 | 606·4 | 16·43 | 534·6 | 614·1 |
| 25 | 13·81 | 545·0 | 579·2 | 18·20 | 528·7 | 579·5 | 17·67 | 536·7 | 608·9 | 15·78 | 534·6 | ,, |
| 30 | 13·66 | 544·3 | 579·1 | 18·27 | 530·7 | 579·9 | 18·60 | 534·7 | 609·4 | 15·20 | 535·0 | 611·5 |
| 35 | 13·93 | 542·6 | 580·4 | 17·74 | 530·1 | 579·7 | 19·21 | 532·9 | ,, | 14·96 | 535·3 | 611·8 |
| 40 | 13·90 | 542·7 | ,, | 17·91 | 530·6 | 580·4 | 19·19 | 531·0 | 609·8 | 14·91 | 535·6 | 611·3 |
| 45 | 14·13 | 542·2 | 580·3 | 17·42 | 530·2 | 582·1 | 18·94 | 530·3 | ,, | 14·78 | 535·5 | 610·1 |
| 50 | 14·43 | 542·5 | ,, | 18·10 | 526·5 | 583·9 | 18·13 | 528·5 | 613·0 | 14·57 | 535·6 | 609·6 |
| 55 | 14·46 | 542·5 | 580·6 | 17·15 | 527·6 | 585·1 | 18·25 | 522·7 | 615·7 | 14·50 | 535·9 | 609·0 |
| | | 20h. | | | 0h. | | | 4h. | | | 8h. | |
| 0 | 25 14·37 | 542·7 | 580·3 | 25 16·45 | 530·3 | 585·3 | 25 17·24 | 520·1 | 617·5 | 25 14·41 | 535·9 | 608·6 |
| 5 | 14·91 | 542·1 | ,, | 16·52 | 529·4 | 586·6 | 16·53 | 521·1 | 617·5 | 14·35 | 536·6 | 608·0 |
| 10 | 15·04 | 541·7 | 581·1 | 16·46 | 530·4 | 588·1 | 16·39 | 521·5 | 617·9 | 14·46 | 535·9 | 607·6 |
| 15 | 15·58 | 541·4 | 581·2 | 16·52 | 530·1 | 589·0 | 15·69 | 521·3 | 618·2 | 14·13 | 535·3 | 607·4 |
| 20 | 16·15 | 541·3 | ,, | 16·63 | 531·4 | 590·4 | 14·94 | 522·1 | 618·3 | 14·10 | 535·2 | 607·6 |
| 25 | 16·38 | 539·8 | 580·9 | 16·38 | 531·0 | 590·9 | 14·06 | 523·6 | 618·3 | 14·06 | 536·0 | 606·1 |
| 30 | 16·82 | 539·7 | ,, | 16·60 | 532·4 | 591·4 | 13·29 | 525·9 | 619·8 | 13·76 | 535·9 | 603·5 |
| 35 | 17·63 | 540·7 | 581·0 | 16·38 | 533·7 | 592·0 | 13·49 | 527·6 | 620·2 | 13·39 | 534·7 | 602·4 |
| 40 | 17·86 | 538·8 | 580·8 | 16·73 | 531·8 | 591·7 | 13·22 | 527·9 | 621·8 | 13·46 | 535·0 | 601·3 |
| 45 | 17·86 | 537·6 | ,, | 16·23 | 533·7 | 591·3 | 12·55 | 528·1 | 624·1 | 12·85 | 535·7 | 599·6 |
| 50 | 17·83 | 538·6 | 580·8 | 16·62 | 535·7 | ,, | 12·18 | 530·6 | 625·3 | 12·85 | 535·4 | 599·3 |
| 55 | 18·87 | 535·6 | ,, | 17·06 | 534·9 | 591·7 | 12·22 | 530·5 | 626·1 | 12·92 | 534·7 | ,, |
| | | 21h. | | | 1h. | | | 5h. | | | 9h. | |
| 0 | 25 19·22 | 533·4 | 582·5 | 25 16·23 | 537·2 | 591·6 | 25 12·80 | 530·6 | 627·2 | 25 12·72 | 532·9 | 600·1 |
| 5 | 19·75 | 533·1 | 582·0 | 18·00 | 536·2 | 592·9 | 13·52 | 529·8 | 626·7 | 12·31 | 531·7 | 600·3 |
| 10 | 20·23 | 530·5 | 583·3 | 17·54 | 535·5 | 593·4 | 14·20 | 533·3 | 626·2 | 11·51 | 530·9 | ,, |
| 15 | 21·04 | 531·4 | 583·9 | 17·83 | 536·2 | 594·1 | 16·92 | 530·8 | 628·6 | 10·97 | 532·5 | 600·0 |
| 20 | 21·19 | 529·0 | 583·5 | 17·86 | 536·0 | 593·6 | 17·07 | 525·9 | 628·7 | 11·44 | 533·1 | ,, |
| 25 | 21·64 | 532·2 | 581·8 | 18·05 | 535·6 | 594·5 | 15·51 | 527·2 | 629·4 | 11·57 | 534·8 | 598·0 |
| 30 | 22·44 | 533·7 | 580·3 | 18·07 | 537·1 | ,, | 16·60 | 524·5 | 632·5 | 11·91 | 535·7 | 596·7 |
| 35 | 23·14 | 535·7 | 578·7 | 18·16 | 537·4 | ,, | 16·05 | 524·1 | 634·5 | 12·02 | 533·0 | 596·5 |
| 40 | 23·58 | 538·9 | 577·4 | 18·50 | 537·9 | 595·6 | 15·17 | 526·2 | 635·2 | 11·79 | 530·2 | 598·4 |
| 45 | 23·98 | 541·8 | 575·3 | 18·54 | 535·6 | 596·3 | 14·89 | 528·1 | 635·1 | 11·74 | 529·3 | 598·5 |
| 50 | 23·34 | 542·7 | 574·3 | 18·48 | 536·3 | 595·6 | 12·87 | 534·8 | 630·9 | 12·11 | 529·3 | 598·2 |
| 55 | 22·84 | 541·9 | 573·6 | 18·40 | 536·4 | 595·1 | 14·24 | 535·9 | ,, | 12·02 | 530·6 | 597·2 |

BIFILAR. Observed 2m after the Declination, $k=0·000140$.

BALANCE. Observed 3m after the Declination, $k=0·0000085$.

The temperature of the bifilar and balance magnets, and the observers' initials, will be found at the corresponding hours in the Hourly Observations of Magnetometers.

When double commas (,,) occur in the column for the balance magnetometer, the needle was examined, and no change from the previous observation being appreciable, the micrometers were not altered.

# EXTRA OBSERVATIONS

OF

# MAGNETOMETERS.

MAKERSTOUN OBSERVATORY,

1844.

| Gött. Mean Time. | | Declination. | | Bifilar Corrected. | | Balance Corrected. | |
|---|---|---|---|---|---|---|---|
| d. | h. | Min. | ° ′ | Min. | Sc. Div. | Min. | Mic. Div. |
| 2 | 7 | 0 | 25 17·53 | 2 | 504·7 | 3 | 822·3 |
| | | 10 | 18·70 | 12 | 502·9 | 13 | 832·0 |
| | | 15 | 19·49 | 17 | 504·0 | 18 | 834·4 |
| | | 20 | 19·73 | 22 | 504·9 | 23 | 834·4 |
| | | 25 | 18·90 | 27 | 506·3 | 28 | 833·5 |
| | | 30 | 18·16 | 32 | 509·5 | | |
| | | 35 | 17·53 | 37 | 511·9 | | |
| 2 | 8 | 0 | 21·16 | 2 | 498·9 | 3 | 844·8 |
| | | 5 | 18·16 | 7 | 503·3 | 8 | 843·6 |
| | | 10 | 18·10 | 12 | 508·5 | | |
| | | 15 | 20·25 | 17 | 506·3 | 18 | 844·6 |
| | | 20 | 20·53 | 22 | 502·6 | | |
| | | 25 | 19·10 | 27 | 503·3 | | |
| | | 30 | 17·80 | 32 | 501·4 | | |
| | | 35 | 16·59 | 37 | 504·6 | | |
| | | 40 | 12·63 | 42 | 503·6 | 43 | 841·9 |
| | | 45 | 07·82 | 47 | 509·6 | 49 | 841·6 |
| | | 50 | 09·49 | 52 | 515·5 | | |
| | | 55 | 12·35 | 57 | 514·6 | 58 | 836·6 |
| 2 | 9 | 0 | 16·21 | 2 | 519·6 | 3 | 828·9 |
| | | 10 | 19·10 | 12 | 515·1 | 13 | 815·0 |
| | | 15 | 20·25 | 17 | 510·1 | 18 | 811·2 |
| | | 25 | 21·01 | 27 | 504·7 | 28 | 806·0 |
| | | 30 | 18·97 | 32 | 501·8 | 33 | 806·7 |
| | | 35 | 18·10 | 37 | 500·9 | 38 | 809·4 |
| | | 40 | 16·87 | 42 | 502·4 | 43 | 807·5 |
| | | 45 | 12·98 | 47 | 511·7 | 48 | 808·9 |
| | | 50 | 10·45 | 52 | 520·5 | 53 | 805·8 |
| | | 55 | 12·76 | 57 | 517·2 | 58 | 806·9 |
| 2 | 10 | 0 | 14·13 | 2 | 516·0 | 3 | 805·1 |
| | | 35 | 17·89 | 37 | 503·8 | 38 | 812·2 |
| 2 | 11 | 0 | 17·17 | 2 | 512·0 | 3 | 792·8 |
| | | 25 | 19·17 | | | | |
| 2 | 12 | 0 | 16·60 | 2 | 516·2 | 3 | 784·2 |
| 2 | 13 | 0 | 19·22 | 2 | 515·3 | 3 | 789·9 |
| | | 15 | 19·58 | | | | |
| 2 | 14 | 0 | 21·23 | 2 | 516·0 | 3 | 795·5 |
| 3 | 13 | 0 | 25 20·76 | 2 | 525·0 | 3 | 793·4 |
| | | 10 | 19·44 | 12 | 518·9 | 13 | 794·0 |
| | | 15 | 18·12 | 17 | 518·1 | 18 | 794·8 |
| | | 20 | 16·77 | 22 | 518·9 | 23 | 795·2 |
| | | 25 | 16·73 | 27 | 519·5 | | |
| | | 30 | 17·39 | 32 | 518·7 | 33 | 797·6 |
| | | 35 | 18·21 | 37 | 518·1 | | |
| | | 40 | 19·12 | 42 | 518·5 | 43 | 798·7 |
| | | 45 | 20·16 | | | | |
| 3 | 14 | 0 | 19·96 | 2 | 520·1 | 3 | 794·8 |
| 4 | 9 | 0 | 25 21·68 | 2 | 515·9 | 3 | 805·8 |
| | | 5 | 21·06 | 7 | 514·4 | | |
| | | 10 | 19·42 | 12 | 512·7 | 13 | 809·8 |
| | | 15 | 16·73 | 17 | 511·8 | 18 | 812·6 |
| | | 20 | 14·08 | 22 | 513·8 | 23 | 815·3 |
| | | 25 | 12·08 | 27 | 512·7 | 28 | 823·1 |
| | | 30 | 11·49 | 32 | 512·9 | 33 | 830·2 |
| | | 35 | 12·75 | 37 | 512·6 | 38 | 834·8 |
| | | 40 | 13·50 | 42 | 517·1 | 43 | 833·2 |
| | | 45 | 14·13 | 47 | 520·2 | 48 | 834·1 |
| | | 50 | 16·68 | 52 | 516·1 | 53 | 834·7 |
| | | 55 | 18·81 | 57 | 514·7 | 58 | 832·1 |

| Gött. Mean Time. | | Declination. | | Bifilar Corrected. | | Balance Corrected. | |
|---|---|---|---|---|---|---|---|
| d. | h. | Min. | ° ′ | Min. | Sc. Div. | Min. | Mic. Div. |
| 4 | 10 | 0 | 25 19·95 | 2 | 511·1 | 3 | 834·0 |
| | | 5 | 20·79 | 7 | 511·6 | 8 | 833·0 |
| | | 10 | 20·06 | 12 | 513·2 | 13 | 830·6 |
| | | 15 | 20·58 | 17 | 514·6 | 18 | 829·2 |
| | | 20 | 20·85 | 22 | 515·5 | 23 | 827·5 |
| | | 30 | 20·20 | 32 | 512·6 | 33 | 827·3 |
| 4 | 11 | 0 | 19·55 | 2 | 515·9 | 3 | 821·6 |
| 4 | 16 | 0 | 24·32 | 2 | 514·9 | 3 | 780·4 |
| | | 15 | 23·48 | 17 | 522·3 | 18 | 759·0 |
| | | 20 | 23·93 | 22 | 528·5 | 23 | 750·4 |
| | | 25 | 23·34 | 27 | 528·1 | 28 | 744·2 |
| | | 30 | 22·94 | 32 | 525·7 | 33 | 738·2 |
| | | 35 | 21·70 | 37 | 523·8 | 38 | 738·0 |
| | | 40 | 22·80 | 42 | 520·9 | 43 | 740·1 |
| | | 45 | 23·65 | 47 | 518·3 | 48 | 739·2 |
| | | 50 | 23·45 | 52 | 519·2 | | |
| | | 55 | 23·18 | 57 | 520·2 | 58 | 736·4 |
| 4 | 17 | 0 | 23·11 | 2 | 521·1 | 3 | 733·6 |
| 4 | 18 | 0 | 17·67 | 2 | 527·0 | 3 | 727·1 |
| 4 | 19 | 0 | 19·32 | 2 | 525·5 | 3 | 732·1 |
| | | 10 | 19·31 | 12 | 529·7 | 13 | 733·0 |
| 4 | 20 | 0 | 21·06 | 2 | 524·6 | 3 | 751·2 |
| 4 | 22 | 0 | 24·12 | 2 | 521·8 | 3 | 765·9 |
| | | 45 | 26·90 | 47 | 511·4 | 48 | 782·8 |
| | | 50 | 27·15 | 52 | 511·9 | 53 | 777·0 |
| | | 55 | 27·26 | 57 | 508·8 | 58 | 775·6 |
| 4 | 23 | 0 | 26·96 | 2 | 515·5 | 3 | 772·3 |
| | | 5 | 28·33 | 7 | 509·3 | 8 | 774·5 |
| | | 10 | 28·67 | 12 | 504·8 | 13 | 776·8 |
| | | 15 | 28·20 | 17 | 501·7 | 18 | 779·1 |
| | | 20 | 25·36 | 22 | 503·6 | 23 | 771·5 |
| | | 25 | 23·41 | 27 | 511·3 | 28 | 770·8 |
| | | 30 | 25·43 | 32 | 517·9 | 33 | 769·5 |
| | | 35 | 25·26 | 37 | 518·4 | 38 | 770·3 |
| | | 40 | 25·47 | 42 | 518·5 | 43 | 771·8 |
| 5 | 0 | 0 | 24·59 | 2 | 518·6 | 3 | 773·9 |
| | | 50 | 32·40 | 52 | 518·2 | 53 | 783·8 |
| | | 55 | 31·92 | 57 | 515·8 | 58 | 781·9 |
| 5 | 1 | 0 | 29·27 | 2 | 513·9 | 3 | 782·7 |
| | | 5 | 29·07 | 7 | 512·2 | | |
| | | 10 | 26·90 | 12 | 514·8 | 13 | 785·2 |
| | | 15 | 28·36 | 17 | 515·3 | | |
| | | 20 | 27·22 | 22 | 518·9 | 23 | 785·5 |
| | | 25 | 26·85 | 27 | 521·2 | | |
| | | 30 | 26·28 | 32 | 519·0 | 33 | 789·2 |
| | | 35 | 25·41 | 37 | 519·9 | 38 | 788·6 |
| | | 40 | 24·66 | 42 | 518·9 | 43 | 799·0 |
| | | 45 | 23·93 | 47 | 520·6 | | |
| | | 50 | 23·70 | 52 | 521·1 | 53 | 793·3 |
| | | 55 | 24·30 | | | | |
| 5 | 2 | 0 | 25·31 | 2 | 519·5 | 3 | 797·9 |
| | | 20 | 23·73 | 22 | 522·6 | 23 | 798·0 |
| 5 | 3 | 0 | 24·93 | 2 | 523·7 | 3 | 795·5 |
| 5 | 6 | 0 | 20·05 | 2 | 523·8 | 3 | 818·7 |
| | | 20 | 21·51 | 22 | 517·1 | 23 | 821·4 |
| | | 25 | 21·59 | 27 | 514·2 | 28 | 822·5 |
| | | 30 | 21·61 | 32 | 517·4 | 33 | 824·6 |
| | | 35 | 22·89 | 37 | 511·6 | 38 | 827·1 |
| | | 40 | 20·79 | 42 | 508·5 | 43 | 828·1 |
| | | 45 | 18·10 | 47 | 515·5 | 48 | 825·0 |
| | | 50 | 18·47 | 52 | 521·6 | | |

| Gött. Mean Time. | | Declination. | |
|---|---|---|---|
| d. | h. | Min. | ° ′ |
| 5 | 6 | 55 | 25 19·55 |
| 5 | 7 | 0 | 18·88 |
| | | 11 | 16·19 |
| | | 15 | 13·49 |
| | | 20 | 10·30 |
| | | 25 | 10·20 |
| | | 30 | 03·32 |
| | | 31 | 25 01·51 |
| | | 34 | 24 59·37 |
| | | 35 | 24 59·03 |
| | | 39 | 24 59·50 |
| | | 40 | 24 59·63 |
| | | 45 | 25 01·25 |
| | | 50 | 03·30 |
| | | 55 | 06·73 |
| 5 | 8 | 0 | 10·56 |
| | | 5 | 12·51 |
| | | 10 | 11·74 |
| | | 15 | 11·49 |
| | | 20 | 12·26 |
| | | 25 | 14·53 |
| | | 30 | 16·70 |
| | | 35 | 18·37 |
| | | 40 | 18·99 |
| | | 45 | 18·87 |
| | | 50 | 18·30 |
| | | 55 | 17·35 |
| 5 | 9 | 0 | 17·06 |
| | | 5 | 18·79 |
| | | 10 | 20·02 |
| | | 15 | 20·67 |
| | | 20 | 22·71 |
| | | 25 | 21·32 |
| | | 30 | 21·79 |
| | | 35 | 21·23 |
| | | 40 | 20·85 |
| | | 45 | 18·47 |
| | | 50 | 11·69 |
| | | 55 | 10·56 |
| 5 | 10 | 0 | 13·76 |
| | | 5 | 15·61 |
| | | 10 | 22·94 |
| | | 15 | 30·84 |
| | | 16 | 31·68 |
| | | 19 | 32·82 |
| | | 20 | 32·64 |
| | | 25 | 29·83 |
| | | 30 | 24·80 |
| | | 35 | 19·75 |
| | | 40 | 15·85 |
| | | 45 | 15·44 |
| | | 50 | 23·73 |
| | | 55 | 18·79 |
| 5 | 11 | 0 | 19·93 |
| | | 5 | 20·32 |
| | | 10 | 21·34 |
| | | 15 | 21·77 |
| | | 20 | 20·79 |
| | | 25 | 19·76 |
| | | 30 | 20·52 |

BIFILAR. $k$=0·000140. BALANCE. $k$=0·0000085.

| Bifilar Corrected. | | Balance Corrected. | | Gött. Mean Time. | Declination. | | Bifilar Corrected. | | Balance Corrected. | | Gött. Mean Time. | Declination. | | Bifilar Corrected. | | Balance Corrected. | |
|---|---|---|---|---|---|---|---|---|---|---|---|---|---|---|---|---|---|
| Min. | Sc. Div. | Min. | Mic. Div. | d. h. | Min. | ° ′ | Min. | Sc. Div. | Min. | Mic. Div. | d. h. | Min. | ° ′ | Min. | Sc. Div. | Min. | Mic. Div. |
| 57 | 521·4 | 58 | 819·5 | 5 11 | 35 | 25 21·09 | 37 | 519·3 | 38 | 771·4 | 6 1 | 35 | 25 25·87 | 37 | 509·4 | 38 | 796·7 |
| 2 | 519·0 | 3 | 812·3 | | 40 | 21·79 | 42 | 518·8 | 43 | 773·2 | | 40 | 25·38 | 42 | 506·5 | 43 | 795·6 |
| 12 | 511·8 | 13 | 824·5 | 5 12 | 0 | 21·16 | 2 | 514·1 | 3 | 778·0 | | 45 | 23·72 | 47 | 510·5 | 48 | 792·9 |
| 17 | 515·1 | 18 | 819·5 | 5 15 | 0 | 20·49 | 2 | 513·0 | 3 | 780·6 | | 50 | 22·84 | 52 | 514·6 | 53 | 795·0 |
| 22 | 521·1 | 23 | 817·9 | | 5 | 20·49 | 7 | 515·0 | 8 | 779·5 | | 55 | 22·64 | 57 | 517·2 | 58 | 795·7 |
| 27 | 513·5 | 28 | 821·6 | | 10 | 22·80 | 12 | 516·6 | | | 6 2 | 0 | 22·69 | 2 | 517·7 | 3 | 797·5 |
| | | | | | 15 | 24·79 | 17 | 515·9 | 18 | 774·6 | 6 3 | 0 | 23·61 | 2 | 522·2 | 3 | 803·1 |
| 32 | 513·6 | 33 | 819·7 | | 20 | 25·91 | 22 | 516·4 | 24 | 779·8 | 6 4 | 0 | 17·33 | 2 | 507·2 | 3 | 827·6 |
| 36 | 527·2 | | | | 25 | 27·62 | 27 | 513·4 | 28 | 777·0 | | 5 | 14·98 | 7 | 517·6 | 8 | 826·3 |
| 37 | 529·2 | 38 | 817·6 | | 30 | 27·14 | 32 | 513·4 | 33 | 773·1 | | 10 | 15·41 | 12 | 522·4 | 13 | 827·4 |
| | | | | | 35 | 26·81 | 37 | 513·6 | 38 | 768·2 | | 15 | 15·71 | 17 | 517·0 | 18 | 828·4 |
| 42 | 527·0 | 43 | 821·1 | | 40 | 25·74 | 42 | 515·7 | 43 | 764·4 | | 20 | 17·29 | 22 | 518·4 | | |
| 47 | 522·0 | 48 | 826·4 | | 45 | 23·88 | 47 | 517·0 | 48 | 760·2 | | 25 | 17·40 | 27 | 517·1 | | |
| 52 | 513·5 | 53 | 831·8 | | 50 | 21·70 | 52 | 516·8 | 53 | 757·2 | | 30 | 18·92 | 32 | 517·0 | | |
| 57 | 505·0 | 58 | 837·7 | | 55 | 20·49 | 57 | 516·7 | 58 | 760·3 | | 35 | 17·83 | 37 | 517·3 | 38 | 824·8 |
| 2 | 503·4 | 3 | 841·5 | 5 16 | 0 | 26·82 | 2 | 517·9 | 3 | 762·1 | | 40 | 17·61 | 42 | 517·1 | 43 | 822·9 |
| 7 | 504·3 | 8 | 837·2 | | 5 | 19·49 | 7 | 517·0 | | | | 45 | 18·25 | 47 | 520·1 | | |
| 12 | 508·4 | 13 | 829·5 | | 10 | 18·72 | 12 | 517·3 | 13 | 763·3 | | 50 | 18·84 | 52 | 524·4 | 53 | 818·8 |
| 17 | 514·8 | 18 | 824·5 | | 15 | 18·20 | 17 | 517·8 | 18 | 764·8 | | 55 | 20·13 | 57 | 524·4 | | |
| 22 | 516·9 | 23 | 820·2 | | 20 | 18·48 | 22 | 516·7 | | | 6 5 | 0 | 21·56 | 2 | 523·3 | 3 | 814·3 |
| 27 | 516·4 | 28 | 819·4 | 5 17 | 0 | 20·60 | 2 | 516·1 | 3 | 769·6 | | 5 | 21·64 | 7 | 521·0 | 8 | 811·7 |
| 32 | 517·8 | 33 | 816·6 | | 10 | 17·49 | 12 | 521·0 | 13 | 769·0 | | 10 | 22·67 | 12 | 519·0 | 13 | 810·6 |
| 37 | 516·3 | 38 | 816·1 | | 15 | 18·23 | 17 | 518·6 | 18 | 762·2 | | 15 | 21·66 | 17 | 519·1 | | |
| 42 | 517·0 | 43 | 813·8 | | 20 | 18·37 | 22 | 520·8 | 23 | 774·2 | | 20 | 21·19 | 22 | 520·7 | 23 | 810·2 |
| 47 | 516·3 | 48 | 811·3 | | 25 | 19·71 | 27 | 519·7 | | | | 25 | 22·13 | 27 | 521·6 | 28 | 808·9 |
| 52 | 513·1 | 53 | 810·7 | | 30 | 20·18 | 32 | 519·2 | 33 | 775·0 | | 30 | 21·19 | 32 | 522·1 | 33 | 806·3 |
| 57 | 512·7 | 58 | 811·4 | 5 18 | 0 | 18·63 | 2 | 523·3 | 3 | 768·5 | | 35 | 21·07 | | | | |
| 2 | 514·9 | 3 | 812·1 | | 10 | 18·61 | 12 | 523·7 | 13 | 766·8 | 6 6 | 0 | 23·18 | 2 | 519·9 | 3 | 806·2 |
| 7 | 513·5 | 8 | 816·0 | | 15 | 19·41 | 17 | 521·5 | | | | 20 | 15·01 | 22 | 521·3 | 23 | 797·3 |
| 12 | 511·4 | 13 | 817·5 | 5 19 | 0 | 26·07 | 2 | 511·7 | 3 | 774·5 | | 25 | 11·74 | 27 | 528·8 | 28 | 798·0 |
| 17 | 511·9 | 18 | 819·2 | | 10 | 24·99 | 12 | 515·1 | 13 | 771·5 | | 30 | 12·53 | 32 | 533·4 | 33 | 797·1 |
| 22 | 510·0 | 23 | 819·9 | | 15 | 25·40 | 17 | 515·8 | 18 | 771·4 | | 35 | 14·75 | 37 | 532·9 | 38 | 796·7 |
| 27 | 513·1 | 28 | 820·0 | | 20 | 25·26 | 22 | 515·5 | | | | 40 | 15·81 | 42 | 527·3 | 43 | 798·4 |
| 32 | 515·4 | 33 | 818·3 | | 25 | 24·52 | 27 | 515·4 | 28 | 769·8 | | 45 | 15·98 | 47 | 526·4 | 48 | 799·1 |
| 37 | 515·9 | 38 | 817·1 | | 30 | 23·32 | 32 | 514·1 | 33 | 770·4 | | 50 | 17·53 | 52 | 524·7 | 53 | 797·9 |
| | | | | | 35 | 22·82 | 37 | 515·9 | | | | 55 | 18·52 | 57 | 520·2 | 58 | 797·3 |
| 47 | 511·8 | 48 | 812·0 | | 40 | 23·32 | 42 | 519·0 | 43 | 768·1 | 6 7 | 0 | 18·21 | 2 | 520·9 | 3 | 796·3 |
| 52 | 521·7 | 53 | 806·6 | | 45 | 23·59 | 47 | 521·7 | 48 | 768·4 | | 5 | 18·90 | 7 | 518·4 | 8 | 797·3 |
| 57 | 528·5 | 58 | 804·0 | | 50 | 23·38 | 52 | 523·2 | | | | 10 | 19·88 | 12 | 517·4 | 13 | 799·5 |
| 2 | 525·1 | 3 | 805·3 | | 55 | 23·98 | 57 | 522·8 | 58 | 767·4 | | 15 | 20·69 | 17 | 516·1 | | |
| 7 | 532·6 | 8 | 798·8 | 5 20 | 0 | 24·26 | 2 | 520·9 | 3 | 769·7 | 6 8 | 0 | 20·96 | 2 | 520·1 | 3 | 789·7 |
| 12 | 535·4 | 13 | 794·8 | 5 23 | 0 | 25·11 | 2 | 501·7 | 3 | 794·6 | | 45 | 15·86 | 47 | 509·2 | 48 | 798·0 |
| | | | | | | | 12 | 502·3 | | | | 50 | 11·48 | 52 | 517·8 | 53 | 794·6 |
| 17 | 521·1 | 18 | 794·2 | | 15 | 24·62 | 17 | 501·5 | 18 | 795·9 | | 55 | 08·38 | 57 | 525·9 | 58 | 789·8 |
| 21 | 510·9 | | | | 20 | 24·01 | 22 | 504·0 | | | 6 9 | 0 | 03·02 | 2 | 539·5 | 3 | 778·9 |
| 22 | 508·6 | 23 | 790·6 | | 45 | 26·54 | 47 | 509·9 | 48 | 795·8 | | 1 | 02·33 | 4 | 545·4 | | |
| 26 | 502·8 | | | | 50 | 26·20 | 52 | 504·5 | | | | 5 | 04·79 | 6 | 548·9 | | |
| 27 | 501·6 | 28 | 786·5 | | 55 | 24·93 | 57 | 507·2 | 58 | 794·2 | | | | 7 | 551·1 | 8 | 773·0 |
| 32 | 502·7 | 33 | 779·0 | 6 0 | 0 | 24·66 | 2 | 508·3 | 3 | 794·7 | | 10 | 09·64 | 12 | 549·8 | 13 | 773·6 |
| 37 | 506·2 | 38 | 775·3 | | 10 | 26·58 | 12 | 513·0 | 13 | 794·2 | | 15 | 14·62 | 17 | 537·1 | 18 | 775·7 |
| 42 | 517·9 | 43 | 772·1 | | 15 | 25·83 | 17 | 512·9 | | | | 20 | 16·41 | 22 | 526·0 | 23 | 776·2 |
| 47 | 525·3 | 48 | 766·8 | | 20 | 23·31 | 22 | 508·8 | 23 | 791·0 | | 25 | 14·70 | 27 | 533·5 | 28 | 768·8 |
| 52 | 527·0 | 53 | 766·4 | | 25 | 23·54 | 27 | 510·2 | | | | 30 | 16·84 | 32 | 532·6 | 33 | 767·9 |
| 57 | 524·0 | 58 | 766·6 | | 30 | 23·51 | 32 | 511·9 | 33 | 790·4 | | 35 | 17·46 | 37 | 526·6 | 38 | 766·9 |
| 2 | 521·1 | 3 | 767·5 | | 35 | 23·16 | 37 | 510·8 | | | | 40 | 16·87 | 42 | 527·1 | 43 | 763·8 |
| 7 | 521·5 | 8 | 767·3 | | 40 | 23·24 | 42 | 512·6 | 43 | 792·3 | | 45 | 18·10 | 47 | 521·5 | 48 | 765·3 |
| 12 | 518·5 | 13 | 769·0 | 6 1 | 0 | 24·59 | 2 | 516·3 | 3 | 790·9 | | 50 | 17·04 | 52 | 516·6 | | |
| 17 | 514·8 | 18 | 770·0 | | 10 | 24·94 | 12 | 514·3 | | | | 55 | 14·85 | 57 | 515·4 | 58 | 765·6 |
| 22 | 515·9 | 23 | 770·9 | | 20 | 27·21 | 22 | 517·1 | 23 | 793·0 | 6 10 | 0 | 13·67 | 2 | 514·2 | 3 | 767·0 |
| 27 | 520·5 | 28 | 768·2 | | 25 | 27·51 | 27 | 512·7 | 28 | 793·8 | | 5 | 13·25 | 7 | 511·6 | 8 | 771·3 |
| 32 | 519·2 | | | | 30 | 27·01 | 32 | 509·9 | 33 | 796·0 | | 10 | 12·87 | 12 | 511·0 | | |

BIFILAR. $k$=0·000140. BALANCE. $k$=0·0000085.

| Gött. Mean Time. | Declination. | | Bifilar Corrected. | | Balance Corrected. | |
|---|---|---|---|---|---|---|
| d. h. | Min. | ° ′ | Min. | Sc. Div. | Min. | Mic. Div. |
| 6 10 | 15 | 25 12·73 | 17 | 511·4 | 16 | 772·0 |
| | 20 | 13·32 | 22 | 513·4 | | |
| | 25 | 14·71 | 27 | 515·6 | 28 | 771·5 |
| | 30 | 14·92 | 32 | 515·1 | 33 | 771·4 |
| 6 11 | 0 | 18·84 | 2 | 511·5 | 3 | 777·9 |
| | 10 | 19·41 | 12 | 515·0 | 13 | 778·8 |
| | 15 | 19·61 | 17 | 513·9 | | |
| 6 12 | 0 | 20·38 | 2 | 517·8 | 3 | 766·9 |
| | 10 | 22·89 | 12 | 516·1 | 13 | 767·0 |
| | 15 | 23·86 | 17 | 513·8 | | |
| | 20 | 24·40 | 22 | 513·1 | 23 | 767·7 |
| | 25 | 23·73 | 27 | 514·6 | 28 | 765·6 |
| | 30 | 22·94 | 32 | 517·0 | 33 | 763·4 |
| | 35 | 22·69 | 37 | 519·3 | 38 | 764·2 |
| | 40 | 22·87 | 42 | 520·6 | 43 | 763·7 |
| | 45 | 23·12 | 47 | 520·0 | 48 | 764·4 |
| 7 6 | 7 | 25 24· | 7 | 513· | 7 | 804· |
| | 15 | 16·79 | 17 | 505·2 | | |
| | 20 | 10·63 | 22 | 513·1 | | |
| | 25 | 05·72 | 27 | 528·8 | 28 | 797·1 |
| | 30 | 07·40 | 32 | 533·0 | 33 | 800·4 |
| | 35 | 10·56 | 37 | 528·4 | 38 | 805·2 |
| | 55 | 17·63 | 57 | 518·0 | 58 | 802·4 |
| 7 12 | 50 | 21·57 | 52 | 514·8 | 53 | 754·2 |
| 7 13 | 0 | 20·96 | 2 | 517·8 | 3 | 756·2 |
| 7 14 | 0 | 19·98 | 2 | 517·7 | 3 | 776·7 |
| | 10 | 18·30 | 12 | 516·9 | 13 | 777·2 |
| | 15 | 18·18 | 17 | 516·3 | 18 | 777·7 |
| | 35 | 19·44 | | | | |
| 7 15 | 0 | 21·84 | 2 | 517·0 | 3 | 787·2 |
| | 30 | 21·10 | 32 | 515·9 | 33 | 787·4 |
| 7 16 | 0 | 21·32 | 2 | 517·6 | 3 | 789·8 |
| 7 19 | 0 | 23·41 | 2 | 520·7 | 3 | 780·9 |
| | 30 | 21·27 | 32 | 520·9 | 33 | 780·8 |
| 7 20 | 0 | 20·74 | 2 | 520·7 | 3 | 785·3 |
| 7 21 | 0 | 20·62 | 2 | 520·6 | 3 | 793·5 |
| | 15 | 21·27 | 17 | 522·4 | 18 | 781·6 |
| | 20 | 21·36 | 22 | 520·3 | 23 | 782·5 |
| | 25 | 21·26 | 27 | 519·3 | 28 | 783·6 |
| | 30 | 20·60 | 32 | 519·1 | 33 | 783·5 |
| | 35 | 20·76 | 37 | 518·2 | 38 | 783·5 |
| 7 22 | 0 | 20·25 | 2 | 516·5 | 3 | 790·5 |
| 8 6 | 0 | 25 19·45 | 2 | 519·0 | 3 | 818·3 |
| | 10 | 22·74 | 12 | 513·1 | 13 | 821·5 |
| | 15 | 21·86 | 17 | 510·1 | 18 | 819·6 |
| | 20 | 20·49 | 22 | 510·6 | | |
| | 25 | 19·21 | 27 | 511·3 | | |
| | 30 | 19·02 | 32 | 513·2 | | |
| | 35 | 19·93 | 37 | 509·4 | 38 | 825·7 |
| | 40 | 19·37 | 42 | 510·2 | 43 | 827·2 |
| | 45 | 19·95 | 47 | 509·2 | | |
| | 50 | 18·50 | 52 | 510·2 | | |
| | 55 | 16·35 | 57 | 512·6 | 58 | 824·1 |
| 8 7 | 0 | 15·49 | 2 | 513·2 | 3 | 825·0 |
| | 5 | 15·11 | 7 | 515·2 | 8 | 824·9 |
| | 10 | 14·50 | 12 | 518·8 | | |
| | 15 | 15·91 | 17 | 522·3 | | |
| | 20 | 17·44 | 22 | 521·4 | 23 | 822·7 |
| | 25 | 18·87 | 27 | 518·9 | | |

| Gött. Mean Time. | Declination. | | Bifilar Corrected. | | Balance Corrected. | |
|---|---|---|---|---|---|---|
| d. h. | Min. | ° ′ | Min. | Sc. Div. | Min. | Mic. Div. |
| 8 7 | 30 | 25 20·53 | 32 | 517·5 | | |
| | 35 | 21·93 | 37 | 514·4 | | |
| | 40 | 21·91 | 42 | 512·7 | | |
| | 45 | 22·04 | 47 | 512·6 | 48 | 821·1 |
| | 50 | 21·36 | 52 | 512·0 | 53 | 818·8 |
| | 55 | 20·20 | 57 | 515·7 | 58 | 816·8 |
| 8 8 | 0 | 18·81 | 2 | 518·1 | 3 | 814·0 |
| | 15 | 20·22 | 17 | 509·8 | 18 | 821·6 |
| | 20 | 20·79 | 22 | 508·7 | 23 | 823·5 |
| | 30 | 21·04 | 32 | 510·9 | | |
| 8 9 | 0 | 20·05 | 2 | 519·3 | 3 | 812·6 |
| 8 10 | 0 | 18·67 | 2 | 515·3 | 3 | 813·4 |
| | 10 | 15·04 | 12 | 529·6 | 13 | 801·4 |
| | 15 | 13·97 | 17 | 546·6 | 18 | 785·2 |
| | 20 | 14·51 | 21 | 556·5 | | |
| | | | 22 | 556·7 | 23 | 774·3 |
| | | | 24 | 558·2 | | |
| | 25 | 20·13 | 26 | 556·7 | | |
| | | | 27 | 553·5 | 28 | 770·4 |
| | | | 29 | 544·9 | | |
| | 30 | 25·67 | 32 | 531·6 | 33 | 770·1 |
| | 35 | 24·30 | 37 | 514·7 | 38 | 768·3 |
| | 40 | 17·49 | 42 | 519·0 | 43 | 759·9 |
| | 45 | 16·75 | 47 | 519·2 | 48 | 752·3 |
| | 50 | 17·61 | 52 | 508·3 | 53 | 755·7 |
| | 55 | 12·78 | 57 | 514·5 | 58 | 753·6 |
| 8 11 | 0 | 12·65 | 2 | 520·4 | 3 | 751·7 |
| | 5 | 16·33 | 7 | 519·2 | 8 | 754·2 |
| | 10 | 19·84 | 12 | 515·7 | 13 | 755·2 |
| | 15 | 21·91 | 17 | 510·5 | 18 | 756·7 |
| | 20 | 22·15 | 22 | 506·1 | 23 | 760·2 |
| | 25 | 20·63 | 27 | 508·5 | 28 | 758·4 |
| | 30 | 17·84 | 32 | 515·4 | 33 | 758·7 |
| | 35 | 16·93 | 37 | 518·4 | 38 | 759·1 |
| | 40 | 16·84 | 42 | 518·8 | 43 | 759·4 |
| | 45 | 16·48 | 47 | 518·6 | 48 | 761·3 |
| | 50 | 17·06 | 52 | 515·8 | 53 | 761·8 |
| | 55 | 16·26 | 57 | 516·9 | 58 | 761·5 |
| 8 12 | 0 | 15·56 | 2 | 517·1 | 3 | 760·8 |
| | 5 | 15·54 | 7 | 513·2 | 8 | 759·0 |
| | 10 | 14·71 | 12 | 514·6 | | |
| 8 13 | 0 | 20·18 | 2 | 517·0 | 3 | 757·0 |
| 8 19 | 0 | 25 21·26 | 2 | 522·3 | 3 | 784·9 |
| | 15 | 22·13 | 17 | 527·4 | 18 | 781·6 |
| | 20 | 21·50 | 22 | 525·6 | 23 | 778·9 |
| | 25 | 22·04 | 27 | 526·5 | 28 | 780·3 |
| | 30 | 22·42 | 32 | 525·4 | | |
| | 35 | 22·10 | 37 | 524·4 | 38 | 778·8 |
| | 40 | 22·04 | 42 | 521·4 | 43 | 776·1 |
| | 45 | 21·12 | 47 | 523·1 | 48 | 777·1 |
| | 50 | 20·45 | 52 | 523·3 | | |
| | 55 | 20·49 | 57 | 523·7 | 58 | 776·6 |
| 8 20 | 0 | 20·40 | 2 | 522·3 | 3 | 779·5 |
| | 5 | 20·55 | 7 | 521·0 | 8 | 780·5 |
| | 10 | 20·58 | 12 | 520·7 | 13 | 780·3 |
| | 15 | 20·53 | 17 | 520·5 | 18 | 779·7 |
| 8 21 | 0 | 20·22 | 2 | 520·0 | 3 | 783·7 |
| 9 2 | 0 | 25 22·20 | 2 | 516·2 | 3 | 799·8 |
| | 10 | 22·40 | 12 | 520·2 | 13 | 803·0 |

| Gött. Mean Time. | Declination. | |
|---|---|---|
| d. h. | Min. | ° ′ |
| 9 2 | 15 | 25 21·98 |
| | 20 | 21·17 |
| | 25 | 22·18 |
| | 30 | 22·20 |
| | 35 | 22·03 |
| | 40 | 21·98 |
| | 45 | 21·56 |
| | 50 | 21·76 |
| | 55 | 22·06 |
| 9 3 | 0 | 22·18 |
| | 5 | 21·36 |
| | 10 | 22·96 |
| | 15 | 23·34 |
| | 20 | 22·28 |
| | 25 | 20·13 |
| | 25 | 22·82 |
| 9 4 | 0 | 21·68 |
| | 10 | 21·50 |
| 9 5 | 0 | 19·73 |
| | 10 | 20·08 |
| 9 6 | 0 | 18·68 |
| | 10 | 14·68 |
| | 15 | 12·51 |
| | 20 | 09·32 |
| | 25 | 11·91 |
| | 30 | 14·82 |
| | 35 | 17·54 |
| | 40 | 18·92 |
| | 45 | 18·40 |
| | 50 | 19·91 |
| | 55 | 22·25 |
| 9 7 | 0 | 23·34 |
| | 5 | 22·10 |
| | 10 | 22·10 |
| | 15 | 20·76 |
| | 20 | 19·89 |
| | 25 | 20·18 |
| | 30 | 20·52 |
| | 35 | 19·39 |
| | 40 | 16·06 |
| | 45 | 08·25 |
| | 50 | 16·63 |
| | 55 | 19·56 |
| 9 8 | 0 | 16·60 |
| | 5 | 16·55 |
| | 10 | 19·56 |
| | 15 | 10·92 |
| | 20 | 05·80 |
| | 25 | 04·71 |
| | 30 | 04·71 |
| | 35 | 09·49 |
| | 40 | 09·93 |
| | 45 | 12·75 |
| | 50 | 12·16 |
| | 55 | 12·80 |
| 9 9 | 0 | 15·36 |
| | 5 | 16·93 |
| | 10 | 16·75 |

BIFILAR. $k=0·000140$. BALANCE. $k=0·0000085$.

Jan. 7d 1h. The magnets appeared to be slightly disturbed.
Jan. 9d 2h 45m. The vibrations of the bifilar magnet were suddenly interrupted, and from 50m to 3h 0m the vibrations were considerable.

| Bifilar Corrected. | | Balance Corrected. | | Gött. Mean Time. | Declination. | | Bifilar Corrected. | | Balance Corrected. | | Gött. Mean Time. | Declination. | | Bifilar Corrected. | | Balance Corrected. | |
|---|---|---|---|---|---|---|---|---|---|---|---|---|---|---|---|---|---|
| Min. | Sc. Div. | Min. | Mic. Div. | d. h. | Min. | ° ′ | Min. | Sc. Div. | Min. | Mic. Div. | d. h. | Min. | ° ′ | Min. | Sc. Div. | Min. | Mic. Div. |
| 17 | 515·4 | | | 9 9 | 15 | 25 17·80 | 17 | 506·7 | 18 | 793·6 | 9 21 | 10 | 25 23·11 | 12 | 520·3 | 13 | 783·7 |
| 22 | 521·4 | 23 | 805·1 | 9 10 | 0 | 20·02 | 2 | 512·1 | 3 | 793·3 | | 15 | 23·27 | 17 | 519·6 | 18 | 784·1 |
| 27 | 524·4 | 28 | 804·4 | | 10 | 20·09 | 12 | 512·1 | 13 | 793·3 | | 20 | 23·66 | 22 | 517·7 | | |
| 30 | 523·2 | | | | 55 | 16·55 | 57 | 516·3 | 58 | 792·2 | 9 22 | 0 | 22·40 | 2 | 516·5 | 3 | 788·0 |
| 32 | 523·4 | | | 9 11 | 0 | 15·58 | 2 | 514·9 | 3 | 791·8 | | 50 | 20·45 | 52 | 514·0 | 53 | 797·6 |
| 37 | 521·3 | 38 | 806·0 | | 5 | 14·80 | 7 | 515·6 | | | 9 23 | 0 | 21·03 | 2 | 515·1 | 3 | 798·3 |
| 42 | 518·5 | 43 | 806·4 | | 10 | 14·13 | 12 | 515·9 | 13 | 795·7 | | 25 | 20·97 | 27 | 518·2 | 28 | 796·6 |
| 47 | 518·9 | | | | 15 | 14·04 | 17 | 517·7 | | | 10 0 | 0 | 21·53 | 2 | 514·1 | 3 | 795·7 |
| 52 | 519·3 | 53 | 807·8 | | 20 | 14·53 | 22 | 518·6 | 23 | 796·6 | | | | | | | |
| 57 | 519·3 | | | | 25 | 15·39 | 27 | 516·3 | | | 10 6 | 0 | 25 21·26 | 2 | 523·2 | 3 | 798·2 |
| 2 | 522·2 | 3 | 807·6 | | 30 | 15·44 | 32 | 515·6 | 33 | 796·8 | | 10 | 20·85 | 12 | 524·1 | 13 | 797·2 |
| 7 | 524·1 | | | | 35 | 15·78 | 37 | 515·6 | | | | 55 | 23·12 | 57 | 520·6 | 58 | 799·3 |
| 11 | 523·8 | | | | 40 | 16·57 | 42 | 516·2 | 43 | 797·7 | 10 7 | 0 | 23·24 | 2 | 518·2 | 3 | 800·7 |
| 12 | 523·0 | 13 | 811·9 | | 45 | 16·82 | 47 | 515·4 | | | | 5 | 22·87 | 7 | 517·2 | 8 | 801·7 |
| 17 | 520·8 | 18 | 814·8 | | 50 | 17·58 | 52 | 514·8 | 53 | 800·0 | | 10 | 22·42 | 12 | 516·3 | 13 | 802·3 |
| 21 | 519·8 | | | | 55 | 18·15 | 56 | 513·8 | | | | 55 | 24·08 | 57 | 516·8 | 58 | 809·0 |
| 22 | 518·8 | | | 9 12 | 0 | 18·95 | 2 | 515·6 | 3 | 799·6 | 10 8 | 0 | 24·1 | 2 | 514·9 | 3 | 809·5 |
| 23 | 521·4 | | | | 5 | 19·26 | 7 | 514·0 | | | | 5 | 24·20 | 7 | 514·0 | 8 | 809·7 |
| 27 | 520·6 | 28 | 814·7 | 9 13 | 0 | 20·18 | 2 | 513·9 | 3 | 793·1 | 10 9 | 0 | 21·46 | 2 | 517·8 | 3 | 816·1 |
| 2 | 518·3 | 3 | 810·0 | | 5 | 19·76 | 7 | 512·4 | 8 | 793·1 | | 25 | 18·75 | 27 | 516·3 | 28 | 817·2 |
| 12 | 520·0 | 13 | 810·5 | | 10 | 19·56 | 12 | 511·7 | 13 | 795·4 | | 30 | 17·42 | 32 | 515·2 | 33 | 819·1 |
| 2 | 520·2 | 3 | 811·1 | | 15 | 19·48 | 17 | 510·1 | 18 | 796·3 | | 35 | 16·13 | 37 | 520·3 | 38 | 817·3 |
| 12 | 522·5 | 13 | 810·3 | | 20 | 19·24 | 22 | 511·0 | 23 | 797·0 | | 40 | 17·75 | 42 | 521·0 | 43 | 817·4 |
| 2 | 509·7 | 3 | 817·1 | | 25 | 18·87 | 27 | 511·9 | | | | 45 | 19·43 | 47 | 517·4 | 48 | 819·0 |
| 12 | 505·3 | 13 | 821·9 | | 30 | 18·90 | 32 | 511·9 | 33 | 797·4 | | 50 | 19·94 | 52 | 514·6 | 53 | 820·5 |
| 17 | 501·6 | 18 | 821·2 | 9 14 | 0 | 19·82 | 2 | 515·5 | 3 | 791·3 | | 55 | 20·11 | 57 | 515·1 | 58 | 821·4 |
| 22 | 511·5 | 23 | 824·4 | | 10 | 19·04 | 12 | 513·8 | 13 | 791·0 | 10 10 | 0 | 20·29 | 2 | 515·0 | 3 | 821·9 |
| 27 | 515·4 | 28 | 826·1 | | 15 | 19·48 | 17 | 512·4 | | | | 5 | 19·21 | 7 | 515·4 | 8 | 817·3 |
| 32 | 518·5 | 33 | 824·8 | 9 15 | 0 | 21·19 | 2 | 511·1 | 3 | 789·8 | | 10 | 14·30 | 12 | 524·5 | 13 | 807·4 |
| 37 | 519·1 | | | | 10 | 20·45 | 12 | 511·5 | 13 | 787·4 | | 14 | 12·78 | | | | |
| 42 | 517·7 | 43 | 821·1 | | 15 | 20·60 | 17 | 513·9 | 18 | 786·7 | | 15 | 14·04 | 17 | 541·2 | 18 | 798·1 |
| 47 | 517·4 | 48 | 818·6 | | 20 | 20·98 | 22 | 514·9 | 23 | 785·3 | | 20 | 20·94 | 22 | 538·2 | 23 | 797·1 |
| 52 | 519·7 | | | | 25 | 20·58 | 27 | 516·3 | 28 | 784·3 | | 25 | 24·75 | 26 | 531·2 | | |
| 57 | 518·2 | 58 | 819·1 | | 30 | 21·76 | 32 | 516·3 | 33 | 783·2 | | | | 27 | 529·1 | 28 | 794·0 |
| 2 | 512·2 | 3 | 819·5 | | 35 | 22·64 | 37 | 516·0 | 38 | 780·4 | | 30 | 25·81 | 31 | 524·6 | | |
| 7 | 511·9 | 8 | 818·5 | | 40 | 22·57 | 42 | 517·1 | 43 | 778·0 | | | | 32 | 523·9 | 33 | 786·4 |
| 12 | 511·1 | | | | 45 | 22·53 | 47 | 518·9 | 48 | 775·2 | | 35 | 22·92 | 36 | 518·7 | | |
| 17 | 510·8 | 18 | 816·7 | | 50 | 22·11 | 52 | 520·4 | 53 | 770·4 | | | | 37 | 518·2 | 38 | 782·3 |
| 22 | 513·6 | | | | 55 | 22·06 | 57 | 520·2 | 58 | 768·5 | | 40 | 16·73 | 42 | 525·2 | 43 | 774·4 |
| 27 | 513·7 | 28 | 817·2 | 9 16 | 0 | 22·10 | 2 | 518·7 | 3 | 767·7 | | 45 | 15·94 | 46 | 531·2 | | |
| 32 | 510·2 | | | | 5 | 21·95 | 7 | 516·8 | 8 | 767·1 | | | | 47 | 531·4 | 48 | 766·5 |
| 37 | 504·2 | 38 | 828·3 | | 10 | 20·90 | 12 | 517·7 | 13 | 766·2 | | 50 | 17·53 | 52 | 527·4 | 53 | 757·3 |
| 42 | 507·0 | 43 | 823·8 | | 15 | 20·63 | 17 | 517·9 | 18 | 765·0 | | 55 | 18·82 | 57 | 520·2 | 58 | 755·4 |
| 47 | 535·3 | 48 | 809·6 | 9 17 | 0 | 20·18 | 2 | 517·3 | 3 | 768·0 | 10 11 | 0 | 19·02 | 2 | 516·2 | 3 | 755·7 |
| 52 | 544·2 | 53 | 805·1 | | 10 | 20·97 | 12 | 516·1 | 13 | 768·6 | | 5 | 18·28 | 7 | 510·6 | 8 | 758·6 |
| 57 | 530·3 | 58 | 800·9 | | 15 | 21·18 | 17 | 516·8 | 18 | 769·1 | | 10 | 16·82 | 12 | 508·1 | 13 | 762·3 |
| 2 | 518·8 | 3 | 792·9 | 9 18 | 0 | 20·43 | 2 | 518·0 | 3 | 772·9 | | 15 | 14·85 | 17 | 508·5 | 18 | 765·5 |
| 7 | 522·9 | 8 | 793·3 | | 5 | 20·06 | 7 | 517·8 | 8 | 773·3 | | 20 | 12·87 | 22 | 511·8 | 23 | 768·0 |
| 12 | 505·7 | 13 | 799·0 | | 10 | 19·89 | | | | | | 25 | 12·70 | 27 | 517·0 | 28 | 769·7 |
| 17 | 506·3 | 18 | 797·6 | 9 19 | 0 | 19·84 | 2 | 520·9 | 3 | 777·6 | | 30 | 14·10 | 32 | 517·0 | 33 | 770·6 |
| 22 | 520·7 | 23 | 791·4 | | 5 | 20·17 | 7 | 525·2 | 8 | 778·7 | | 35 | 15·61 | 37 | 517·8 | 38 | 771·5 |
| 27 | 527·3 | 28 | 787·2 | | 10 | 20·94 | 12 | 524·8 | 13 | 778·3 | | 40 | 17·91 | 42 | 511·8 | 43 | 778·2 |
| 32 | 536·5 | 33 | 787·2 | | 15 | 21·07 | 17 | 522·7 | 18 | 779·0 | | 45 | 18·88 | 47 | 506·1 | 48 | 784·9 |
| 37 | 526·9 | 38 | 788·5 | | 20 | 21·17 | 22 | 519·8 | 23 | 781·4 | | 50 | 17·51 | 52 | 506·2 | 53 | 787·7 |
| 42 | 523·5 | | | | 25 | 20·63 | 27 | 519·3 | 28 | 781·6 | | 55 | 15·94 | 57 | 507·9 | | |
| 47 | 513·4 | 48 | 790·6 | | 55 | 22·47 | 57 | 516·5 | 58 | 784·0 | 10 12 | 0 | 14·70 | 2 | 509·1 | 3 | 788·3 |
| 52 | 510·7 | 53 | 791·6 | 9 20 | 0 | 22·25 | 2 | 516·0 | 3 | 783·4 | | 5 | 14·28 | 7 | 510·8 | | |
| 57 | 511·2 | | | | 5 | 21·03 | 7 | 518·5 | 8 | 782·9 | | 10 | 15·24 | 12 | 511·2 | | |
| 2 | 510·1 | 3 | 792·1 | | 10 | 21·10 | 12 | 519·9 | 13 | 782·8 | | 15 | 16·82 | 17 | 504·0 | 18 | 792·3 |
| 7 | 506·3 | 8 | 792·8 | | 15 | 21·16 | 17 | 519·8 | 18 | 782·8 | | 20 | 16·08 | 22 | 500·2 | 23 | 794·7 |
| 12 | 508·1 | | | 9 21 | 0 | 19·37 | 2 | 517·9 | 3 | 783·2 | | 25 | 15·61 | 27 | 498·4 | 28 | 797·6 |

BIFILAR. $k=0{\cdot}000140$. BALANCE. $k=0{\cdot}0000085$.

Jan. $10^d$ $10^h$ $5^m$. The vibrations of the declination and bifilar magnets were suddenly interrupted.

| Gött. Mean Time. | Declination. | | Bifilar Corrected. | | Balance Corrected. | |
|---|---|---|---|---|---|---|
| d. h. | Min. | ° ′ | Min. | Sc. Div. | Min. | Mic. Div. |
| 10 12 | 30 | 25 14·33 | 32 | 499·3 | 33 | 798·7 |
| | 35 | 13·29 | 37 | 503·1 | 38 | 799·0 |
| | 40 | 13·96 | 42 | 505·9 | 43 | 800·4 |
| | 45 | 14·71 | 47 | 510·1 | 48 | 799·0 |
| | 50 | 16·01 | 52 | 511·4 | 53 | 800·8 |
| | 55 | 17·83 | 57 | 512·4 | 58 | 800·4 |
| 10 13 | 0 | 19·02 | 2 | 512·9 | 3 | 799·2 |
| | 5 | 19·44 | 7 | 513·2 | 8 | 798·1 |
| | 10 | 19·89 | 12 | 513·3 | 13 | 796·9 |
| | 15 | 19·55 | 17 | 513·5 | 18 | 795·6 |
| | 20 | 19·24 | 22 | 512·4 | 23 | 794·3 |
| | 30 | 19·24 | 32 | 508·9 | 33 | 793·7 |
| | 55 | 18·43 | 57 | 516·3 | 58 | 794·3 |
| 10 14 | 0 | 17·26 | 2 | 517·9 | 3 | 792·5 |
| | 5 | 16·48 | 7 | 516·7 | | |
| | 10 | 16·79 | 12 | 516·4 | 13 | 794·9 |
| | 15 | 16·79 | 17 | 517·8 | | |
| | 20 | 17·54 | 22 | 516·6 | | |
| | 30 | 17·63 | 32 | 519·0 | 33 | 792·4 |
| | 45 | 18·25 | 47 | 514·4 | 48 | 795·1 |
| 10 15 | 0 | 19·28 | 2 | 517·7 | 3 | 788·2 |
| 10 16 | 0 | 20·85 | 2 | 515·7 | 3 | 785·3 |
| | 5 | 20·35 | 7 | 516·5 | | |
| | 10 | 21·03 | 12 | 514·8 | 13 | 786·8 |
| | 15 | 20·99 | | | | |
| 10 17 | 0 | 21·97 | 2 | 517·3 | 3 | 787·7 |
| | 10 | 22·04 | 12 | 517·3 | 13 | 787·7 |
| 10 18 | 0 | 21·03 | 2 | 518·8 | 3 | 787·5 |
| 10 19 | 0 | 21·29 | 2 | 517·8 | 3 | 786·8 |
| | 10 | 22·67 | 12 | 516·2 | 13 | 788·6 |
| | 15 | 23·41 | 17 | 514·8 | | |
| | 20 | 23·68 | 22 | 514·4 | 23 | 789·6 |
| | 31 | 24·22 | | | | |
| | 35 | 23·68 | 37 | 512·4 | 38 | 787·4 |
| | 45 | 23·14 | 47 | 514·4 | 48 | 786·1 |
| 10 20 | 0 | 22·60 | 2 | 517·3 | 3 | 784·5 |
| | 25 | 21·53 | 27 | 517·7 | | |
| 10 21 | 0 | 21·03 | 2 | 518·9 | 3 | 778·8 |
| 11 12 | 0 | 25 17·68 | 2 | 516·1 | 3 | 796·8 |
| | 10 | 16·86 | 12 | 514·6 | 13 | 794·0 |
| | 20 | 16·75 | 22 | 510·7 | 23 | 796·9 |
| | 30 | 16·08 | 32 | 509·2 | | |
| 11 13 | 0 | 19·29 | 2 | 508·1 | 3 | 795·2 |
| 12 9 | 0 | 25 20·02 | 2 | 516·0 | 3 | 797·9 |
| | 15 | 16·79 | 17 | 516·3 | 18 | 798·4 |
| | 20 | 12·51 | 22 | 513·4 | 23 | 797·0 |
| | 25 | 09·64 | 27 | 520·2 | 28 | 793·8 |
| | 30 | 06·86 | 32 | 526·4 | 33 | 791·0 |
| | 35 | 06·67 | 37 | 526·9 | 38 | 794·5 |
| | 40 | 06·86 | 42 | 529·6 | 43 | 792·3 |
| | 45 | 08·19 | 47 | 532·1 | 48 | 791·6 |
| | 50 | 09·77 | 52 | 531·5 | 53 | 789·7 |
| | 55 | 11·28 | 57 | 529·4 | 58 | 788·1 |
| 12 10 | 0 | 12·72 | 2 | 524·5 | 3 | 787·5 |
| | 5 | 13·29 | 7 | 522·9 | 8 | 784·3 |
| | 10 | 13·74 | 12 | 521·1 | 13 | 785·2 |
| | 15 | 15·71 | 17 | 517·4 | 18 | 789·0 |
| | 20 | 16·99 | 22 | 513·1 | 23 | 791·6 |
| | 25 | 17·42 | 27 | 513·8 | | |

| Gött. Mean Time. | Declination. | | Bifilar Corrected. | | Balance Corrected. | |
|---|---|---|---|---|---|---|
| d. h. | Min. | ° ′ | Min. | Sc. Div. | Min. | Mic. Div. |
| 12 10 | 30 | 25 18·18 | 32 | 514·8 | 33 | 790·2 |
| | 35 | 18·92 | 37 | 513·7 | | |
| | 40 | 19·51 | 42 | 514·1 | 43 | 789·1 |
| | 45 | 20·15 | 47 | 516·8 | 48 | 788·6 |
| | 50 | 21·09 | 52 | 515·2 | | |
| | 55 | 21·79 | 57 | 514·5 | 58 | 792·1 |
| 12 11 | 0 | 21·53 | 2 | 515·5 | 3 | 784·5 |
| 17 8 | 0 | 25 21·68 | 2 | 516·9 | 3 | 792·4 |
| | 10 | 20·83 | 12 | 512·6 | 13 | 797·7 |
| | 15 | 20·00 | 17 | 512·4 | 18 | 798·7 |
| | 20 | 19·42 | 22 | 512·6 | 23 | 799·8 |
| | 25 | 18·74 | 27 | 514·8 | 28 | 800·8 |
| | 30 | 17·54 | 32 | 512·4 | 33 | 802·1 |
| | 35 | 16·73 | 37 | 517·2 | | |
| | 40 | 17·36 | 42 | 517·9 | 43 | 803·1 |
| | 50 | 18·70 | 52 | 517·7 | | |
| 17 9 | 0 | 19·26 | 2 | 519·4 | 3 | 801·0 |
| 18 10 | 0 | 25 19·51 | 2 | 519·2 | 3 | 779·9 |
| | 50 | 17·04 | 52 | 517·6 | 53 | 781·5 |
| | 55 | 15·32 | 57 | 516·7 | 58 | 780·4 |
| 18 11 | 0 | 13·49 | 2 | 517·1 | 3 | 780·9 |
| | 5 | 11·54 | 7 | 519·2 | 8 | 780·0 |
| | 10 | 10·97 | 12 | 520·4 | 13 | 780·7 |
| | 15 | 10·67 | 17 | 518·3 | 18 | 782·8 |
| | 20 | 10·09 | 22 | 516·5 | 23 | 784·6 |
| | 25 | 09·73 | 27 | 514·7 | 28 | 785·4 |
| | 30 | 10·70 | 32 | 512·1 | 33 | 787·8 |
| | 35 | 12·11 | 37 | 508·8 | 38 | 792·7 |
| | 40 | 16·32 | 42 | 506·3 | 43 | 794·6 |
| | 45 | 18·47 | 47 | 508·2 | 48 | 790·6 |
| | 50 | 19·44 | 52 | 513·3 | 53 | 781·8 |
| | 55 | 19·61 | 57 | 514·3 | 58 | 775·2 |
| 18 12 | 0 | 19·41 | 2 | 516·8 | 3 | 770·5 |
| | 5 | 18·75 | 7 | 518·8 | 8 | 766·1 |
| | 10 | 18·03 | 12 | 516·1 | 13 | 763·2 |
| | 15 | 15·49 | 17 | 515·3 | 18 | 760·6 |
| | 20 | 13·47 | 22 | 517·2 | 23 | 761·5 |
| | 25 | 12·85 | 27 | 519·2 | 28 | 762·0 |
| | 30 | 13·59 | 32 | 520·3 | 33 | 763·3 |
| | 35 | 15·04 | 37 | 520·1 | 38 | 766·6 |
| | 40 | 16·72 | 42 | 519·1 | 43 | 768·5 |
| | 45 | 18·05 | 47 | 519·8 | 48 | 768·7 |
| | 50 | 19·15 | 52 | 519·7 | 53 | 769·0 |
| | 55 | 20·45 | 57 | 518·5 | 58 | 770·1 |
| 18 13 | 0 | 20·85 | 2 | 515·9 | 3 | 769·5 |
| | 10 | 20·52 | 12 | 514·7 | 13 | 771·0 |
| | 15 | 19·95 | 17 | 516·2 | 18 | 770·0 |
| | 20 | 19·51 | 22 | 517·5 | 23 | 768·4 |
| | 25 | 19·07 | 27 | 518·1 | | |
| 18 14 | 0 | 20·18 | 2 | 518·8 | 3 | 769·9 |
| | 20 | 19·58 | 22 | 519·2 | 23 | 806·1 |
| 18 15 | 0 | 20·42 | 2 | 519·9 | 3 | 768·9 |
| 19 12 | 0 | 25 20·36 | 2 | 519·1 | 3 | 778·1 |
| | 10 | 20·89 | 12 | 515·4 | 13 | 777·9 |
| | 15 | 20·05 | 17 | 519·5 | | |
| | 20 | 20·38 | 22 | 518·7 | 23 | 776·6 |
| 19 13 | 0 | 18·77 | 2 | 516·5 | 3 | 781·8 |
| | 10 | 19·98 | 12 | 516·8 | 13 | 781·4 |

| Gött. Mean Time. | Declination. | |
|---|---|---|
| d. h. | Min. | ° ′ |
| 19 13 | 15 | 25 19·61 |
| | 25 | 18·81 |
| | 35 | 19·08 |
| 19 14 | 0 | 18·94 |
| 19 15 | 0 | 16·95 |
| | 10 | 16·73 |
| | 15 | 17·06 |
| | 30 | 17·47 |
| 19 16 | 0 | 18·38 |
| 20 11 | 0 | 25 18·50 |
| | 10 | 16·48 |
| | 15 | 16·18 |
| | 20 | 15·99 |
| | 25 | 15·39 |
| | 30 | 15·29 |
| | 35 | 14·80 |
| | 40 | 14·68 |
| | 45 | 15·12 |
| | 50 | 16·21 |
| | 55 | 16·84 |
| 20 12 | 0 | 17·65 |
| | 5 | 18·43 |
| | 10 | 18·90 |
| | 15 | 19·02 |
| | 20 | 19·42 |
| | 25 | 19·17 |
| | 30 | 19·31 |
| 21 14 | 0 | 25 19·10 |
| | 5 | 19·82 |
| | 30 | 19·68 |
| 21 15 | 0 | 20·09 |
| 22 3 | 0 | 24·25 |
| | 15 | 25·43 |
| | 20 | 25·06 |
| | 25 | 24·77 |
| | 30 | 24·33 |
| | 35 | 23·85 |
| | 45 | 23·54 |
| | 50 | 23·24 |
| | 55 | 23·22 |
| 22 4 | 0 | 23·05 |
| 22 6 | 0 | 22·91 |
| | 10 | 23·27 |
| | 15 | 21·32 |
| | 20 | 20·70 |
| | 25 | 20·40 |
| | 30 | 23·12 |
| | 35 | 24·46 |
| | 40 | 24·35 |
| | 45 | 24·12 |
| | 50 | 24·35 |

BIFILAR. $k$=0·000140. BALANCE. $k$=0·0000085.

| Bifilar Corrected. | | Balance Corrected. | | Gött. Mean Time. | Declination. | | Bifilar Corrected. | | Balance Corrected. | | Gött. Mean Time. | Declination. | | Bifilar Corrected. | | Balance Corrected. | |
|---|---|---|---|---|---|---|---|---|---|---|---|---|---|---|---|---|---|
| Min. | Sc. Div. | Min. | Mic. Div. | d. h. | Min. | ° ′ | Min. | Sc. Div. | Min. | Mic. Div. | d. h. | Min. | ° ′ | Min. | Sc. Div. | Min. | Mic. Div. |
| 17 | 517·2 | 18 | 779·5 | 22 6 | 55 | 25 23·01 | 57 | 512·9 | 58 | 818·5 | 27 10 | 20 | 25 10·38 | 22 | 529·9 | | |
| 27 | 514·7 | 28 | 781·7 | 22 7 | 0 | 22·10 | 2 | 513·2 | 3 | 828·1 | | 25 | 11·81 | 27 | 530·2 | | |
| 37 | 513·7 | 38 | 784·1 | | 5 | 21·50 | 7 | 513·2 | 8 | 826·8 | | 30 | 14·11 | 32 | 528·3 | | |
| 2 | 516·1 | 3 | 783·5 | | 30 | 21·24 | 32 | 517·8 | 33 | 819·5 | | 35 | 15·71 | 37 | 524·9 | | |
| 2 | 516·6 | 3 | 783·9 | | 35 | 21·06 | | | | | 27 11 | 5 | 16·62 | 7 | 520·9 | | |
| 12 | 517·5 | 13 | 782·7 | 22 8 | 0 | 21·83 | 2 | 514·7 | 3 | 813·2 | | | | | | | |
| | | | | 22 14 | 0 | 19·46 | 2 | 518·5 | 3 | 780·1 | 28 13 | 0 | 25 17·04 | 2 | 514·8 | 3 | 746·9 |
| 32 | 514·4 | 33 | 785·6 | | 7 | 18·70 | | | | | | 10 | 16·01 | | | | |
| 2 | 517·5 | 3 | 784·0 | | 15 | 19·04 | | | | | | 15 | 16·15 | 17 | 512·7 | 18 | 750·7 |
| | | | | 22 15 | 0 | 19·69 | 2 | 518·3 | 3 | 782·3 | | 25 | 17·49 | 27 | 513·8 | 28 | 749·2 |
| 2 | 519·8 | 3 | 780·5 | 22 18 | 0 | 17·71 | 2 | 523·4 | 3 | 770·1 | 28 14 | 0 | 18·82 | 2 | 516·2 | 3 | 744·9 |
| 12 | 528·6 | 13 | 771·9 | | 5 | 17·36 | | | | | 28 16 | 0 | 22·30 | 2 | 516·9 | 3 | 748·1 |
| 17 | 527·6 | 18 | 773·8 | | 15 | 17·71 | | | | | | 5 | 23·14 | 7 | 517·0 | 8 | 748·0 |
| 22 | 523·9 | 23 | 775·6 | 22 19 | 0 | 18·30 | 2 | 523·6 | 3 | 770·2 | | 10 | 23·48 | 12 | 515·8 | | |
| 27 | 522·2 | 28 | 775·9 | | | | | | | | | 15 | 22·65 | 17 | 515·8 | 18 | 744·6 |
| 32 | 520·0 | | | 23 6 | 0 | 25 24·08 | 2 | 527·9 | 3 | 777·5 | | 20 | 21·77 | 22 | 517·1 | 23 | 742·8 |
| 37 | 519·0 | 38 | 776·9 | | 10 | 23·54 | | | | | | 25 | 21·42 | | | | |
| 42 | 519·5 | | | | 20 | 23·99 | 22 | 528·5 | | | | 40 | 19·24 | 42 | 519·4 | 43 | 741·1 |
| 47 | 518·5 | 48 | 780·2 | | 25 | 23·41 | 27 | 529·6 | 28 | 777·0 | | 45 | 18·72 | | | | |
| 52 | 516·4 | | | | 30 | 23·61 | 32 | 529·9 | | | 28 17 | 0 | 17·73 | 2 | 516·7 | 3 | 745·4 |
| 57 | 516·5 | 58 | 781·1 | | 35 | 24·25 | 37 | 529·9 | 38 | 778·8 | | 10 | 18·81 | 12 | 514·5 | 13 | 750·7 |
| 2 | 517·5 | 3 | 781·2 | | 40 | 24·69 | 42 | 527·8 | 43 | 779·6 | 28 18 | 0 | 18·68 | 2 | 519·9 | 3 | 748·7 |
| 7 | 517·7 | 8 | 780·6 | | 45 | 24·85 | 47 | 527·8 | 48 | 780·3 | | | | | | | |
| 12 | 518·3 | | | | 50 | 25·17 | 52 | 527·9 | 53 | 779·6 | 29 9 | 0 | 25 20·32 | 2 | 513·7 | 3 | 793·0 |
| 17 | 519·5 | 18 | 776·4 | | 55 | 25·56 | 57 | 525·9 | 58 | 802·1 | | 10 | 19·14 | 12 | 513·3 | 13 | 795·5 |
| 22 | 520·3 | | | 23 7 | 0 | 25·58 | 2 | 524·1 | 3 | 783·6 | | 15 | 18·79 | 17 | 514·3 | | |
| 27 | 521·1 | 28 | 779·0 | | 5 | 24·75 | 7 | 526·9 | 8 | 787·0 | | 25 | 17·51 | 27 | 516·1 | 28 | 793.9 |
| 32 | 520·4 | 33 | 779·8 | | 10 | 24·46 | 12 | 527·1 | 13 | 789·6 | | 30 | 17·47 | | | | |
| | | | | | 15 | 25·24 | 17 | 526·5 | 18 | 793·4 | 29 10 | 0 | 18·20 | 2 | 516·8 | 3 | 789·3 |
| 2 | 518·3 | 3 | 779·0 | | 20 | 24·93 | 22 | 525·9 | 23 | 792·0 | 30 7 | 0 | 13·46 | 2 | 522·1 | 3 | 785·5 |
| 7 | 519·1 | 8 | 779·2 | | 25 | 24·70 | 27 | 526·0 | 28 | 793·4 | | 10 | 15·59 | 12 | 524·3 | 13 | 784·1 |
| 32 | 520·1 | 33 | 775·8 | | 30 | 24·19 | | | | | | 15 | 16·97 | 17 | 524·8 | | |
| 2 | 520·6 | 3 | 776·1 | 23 8 | 0 | 24·25 | 2 | 523·2 | 3 | 795·2 | | 20 | 18·65 | 22 | 524·1 | 23 | 782·0 |
| 2 | 511·2 | 3 | 794·5 | | | | | | | | | 25 | 19·53 | 27 | 522·5 | 28 | 781·8 |
| 17 | 513·2 | 18 | 796·0 | 25 11 | 45 | 25 19·64 | 47 | 519·5 | 48 | 763·0 | | 30 | 20·23 | 32 | 521·0 | 33 | 780·7 |
| 22 | 509·9 | | | 25 12 | 0 | 19·88 | 2 | 517·2 | 3 | 765·5 | 30 8 | 0 | 19·44 | 2 | 521·1 | 3 | 775·8 |
| 27 | 509·5 | 28 | 795·1 | | | | | | | | 30 12 | 0 | 15·44 | 2 | 529·6 | 3 | 747·0 |
| 32 | 510·2 | 33 | 794·0 | 26 11 | 0 | 25 15·12 | 2 | 513·6 | 3 | 771·7 | | 5 | 15·47 | 7 | 530·8 | 8 | 744·2 |
| 37 | 512·5 | 38 | 793·3 | | 10 | 16·86 | 12 | 515·7 | 13 | 774·9 | | 10 | 15·49 | 12 | 530·6 | 13 | 743·5 |
| 47 | 519·2 | 48 | 789·8 | | 15 | 18·35 | 17 | 518·5 | 18 | 772·5 | | 15 | 15·52 | 17 | 527·5 | 18 | 743·7 |
| 52 | 516·9 | 53 | 788·7 | | 20 | 18·75 | 22 | 517·1 | 23 | 771·6 | | 20 | 15·47 | 22 | 524·0 | 23 | 743·2 |
| 57 | 516·3 | 58 | 789·4 | | 25 | 18·99 | 27 | 515·6 | 28 | 772·7 | | 25 | 15·13 | 27 | 522·6 | 28 | 742·3 |
| 2 | 518·0 | 3 | 790·1 | | 30 | 19·28 | 32 | 516·6 | 33 | 773·2 | | 30 | 14·35 | 32 | 521·8 | 33 | 742·3 |
| 2 | 518·5 | 3 | 820·2 | | 35 | 19·35 | 37 | 517·6 | 38 | 771·8 | | 35 | 14·13 | 37 | 519·9 | 38 | 743·3 |
| 11 | 509·4 | | | | 40 | 19·46 | 42 | 518·6 | 43 | 771·1 | | 40 | 13·99 | 42 | 518·6 | 43 | 743·1 |
| 12 | 511·6 | 13 | 826·4 | | 45 | 19·22 | 47 | 517·5 | 48 | 770·0 | | 45 | 14·11 | 47 | 517·9 | 48 | 743·8 |
| 17 | 524·8 | 18 | 816·7 | | 50 | 18·77 | 52 | 518·5 | | | | 50 | 14·33 | 52 | 516·9 | 53 | 745·1 |
| 21 | 520·6 | | | | 55 | 17·73 | 57 | 519·6 | 58 | 768·5 | | 55 | 14·60 | 57 | 517·8 | 58 | 745·2 |
| 22 | 518·3 | | | 26 12 | 0 | 17·24 | 2 | 519·7 | 3 | 767·6 | 30 13 | 0 | 14·85 | 2 | 518·2 | 3 | 744·7 |
| 23 | 515·6 | 23 | 821·9 | | 5 | 17·02 | 7 | 520·2 | 8 | 767·3 | | | | | | | |
| 26 | 511·9 | | | | 10 | 16·82 | 12 | 518·7 | 13 | 769·0 | 31 8 | 0 | 25 18·16 | 2 | 510·1 | 3 | 787·2 |
| 27 | 511·3 | | | 26 13 | 0 | 17·06 | 2 | 511·7 | 3 | 772·8 | | 5 | 18·57 | 7 | 509·9 | 8 | 793·1 |
| 28 | 511·9 | 28 | 828·5 | | 10 | 18·03 | 12 | 511·4 | 13 | 774·0 | | 10 | 18·77 | 12 | 509·9 | 13 | 795·3 |
| 31 | 514·2 | | | | 15 | 18·14 | 17 | 513·7 | 18 | 774·1 | | 15 | 18·75 | 17 | 511·5 | 18 | 798·3 |
| 32 | 514·0 | | | | 20 | 17·70 | 22 | 516·9 | 23 | 773·1 | | 40 | 06·77 | 42 | 524·3 | 43 | 794·8 |
| 33 | 512·6 | 33 | 830·7 | | 25 | 17·80 | 27 | 517·1 | 28 | 772·2 | | 45 | 04·59 | 47 | 532·9 | 48 | 791·4 |
| 37 | 510·0 | | | 26 14 | 0 | 20·03 | 2 | 516·1 | 4 | 770·4 | | 50 | 06·37 | 52 | 532·7 | 53 | 789·9 |
| 38 | 509·4 | 38 | 832·5 | | 10 | 19·61 | 12 | 515·1 | 13 | 770·3 | | 55 | 08·79 | 57 | 528·3 | 58 | 788·2 |
| 42 | 509·2 | 43 | 822·8 | 26 15 | 0 | 20·85 | 2 | 515·4 | 3 | 771·6 | 31 9 | 0 | 09·88 | 2 | 522·7 | 3 | 788·6 |
| 47 | 512·5 | 48 | 821·8 | | | | | | | | | 5 | 11·25 | 7 | 516·6 | 8 | 789·7 |
| 52 | 513·0 | 53 | 820·6 | 27 10 | 0 | 25 19·46 | 2 | 516·2 | | | | 10 | 11·98 | 12 | 512·9 | 13 | 790·6 |

BIFILAR. $k$=0·000140. BALANCE. $k$=0·0000085.

Jan. 27d 10h 20m. This was the time of the least declination during this disturbance.

| Gött. Mean Time. | | Declination. | | Bifilar Corrected. | | Balance Corrected. | | Gött. Mean Time. | | Declination. | | Bifilar Corrected. | | Balance Corrected. | | Gött. Mean Time. | | Declination. | |
|---|---|---|---|---|---|---|---|---|---|---|---|---|---|---|---|---|---|---|---|
| d. | h. | Min. | ° ′ | Min. | Sc. Div. | Min. | Mic. Div. | d. | h. | Min. | ° ′ | Min. | Sc. Div. | Min. | Mic. Div. | d. | h. | Min. | ° ′ |
| 31 | 9 | 15 | 25 12·73 | 17 | 506·7 | 18 | 794·6 | 1 | 5 | 15 | 25 20·23 | 17 | 511·8 | 18 | 855·0 | 1 | 10 | 45 | 25 15·15 |
| | | 20 | 12·78 | 22 | 502·5 | 23 | 798·5 | | | 20 | 20·49 | 22 | 503·3 | 23 | 854·5 | | | 50 | 15·74 |
| | | 25 | 12·35 | 27 | 505·3 | 28 | 798·1 | | | 25 | 17·49 | 27 | 510·4 | 28 | 850·5 | | | 55 | 16·26 |
| | | 30 | 13·52 | 32 | 510·7 | 33 | 797·8 | | | 30 | 19·41 | 32 | 514·4 | 33 | 847·7 | 1 | 11 | 0 | 17·02 |
| | | 35 | 16·08 | 37 | 512·3 | 38 | 796·3 | | | 35 | 21·23 | 37 | 512·6 | 38 | 846·7 | | | 5 | 16·93 |
| | | 40 | 18·70 | 42 | 514·1 | 43 | 794·3 | | | 40 | 21·39 | 42 | 515·7 | 43 | 843·0 | | | 10 | 17·42 |
| | | 45 | 20·77 | 47 | 515·2 | 48 | 791·8 | | | 45 | 22·77 | 47 | 519·1 | 48 | 839·7 | | | 15 | 17·67 |
| | | 50 | 21·43 | 52 | 512·5 | 53 | 789·3 | | | 50 | 24·67 | 52 | 524·0 | 53 | 837·1 | | | 20 | 17·91 |
| | | 55 | 20·96 | 57 | 509·1 | 58 | 787·9 | | | 55 | 27·76 | 57 | 520·9 | 58 | 836·7 | | | 25 | 18·23 |
| 31 | 10 | 0 | 19·64 | 2 | 509·9 | 3 | 787·1 | 1 | 6 | 0 | 30·05 | 2 | 515·0 | 3 | 841·7 | | | 30 | 18·84 |
| | | 5 | 18·60 | 7 | 512·9 | 8 | 785·4 | | | 5 | 29·30 | 7 | 509·1 | 8 | 843·7 | | | 35 | 19·26 |
| | | 10 | 18·84 | 12 | 515·4 | 13 | 784·7 | | | 10 | 27·01 | 12 | 510·6 | 13 | 840·7 | | | 40 | 19·01 |
| | | 15 | 19·34 | | | | | | | 15 | 24·30 | 17 | 514·1 | 18 | 844·0 | 1 | 12 | 0 | 17·87 |
| | | 25 | 19·44 | 27 | 518·9 | 28 | 778·9 | | | 20 | 23·96 | 22 | 518·3 | 23 | 843·7 | | | | |
| | | 30 | 19·58 | | | | | | | 25 | 24·26 | 27 | 520·7 | 28 | 841·9 | 1 | 18 | 0 | 25 16·65 |
| 31 | 11 | 0 | 19·31 | 2 | 521·6 | 3 | 775·6 | | | 30 | 25·67 | 32 | 522·1 | 33 | 839·3 | | | 5 | 17·36 |
| 31 | 15 | 0 | 21·05 | 2 | 525·9 | 3 | 765·8 | | | 35 | 26·21 | 37 | 518·9 | 38 | 839·1 | | | 10 | 17·65 |
| | | 10 | 24·25 | 12 | 526·0 | 13 | 761·8 | | | 40 | 25·78 | 42 | 516·8 | 43 | 838·6 | | | 15 | 17·02 |
| | | 15 | 24·75 | 17 | 526·1 | 18 | 758·6 | | | 45 | 24·69 | 47 | 516·8 | 48 | 838·1 | | | 20 | 16·70 |
| | | 20 | 24·15 | 22 | 524·9 | 23 | 755·7 | | | 50 | 24·12 | 52 | 517·1 | 53 | 837·8 | | | 25 | 16·10 |
| | | 25 | 22·87 | 27 | 522·1 | 28 | 754·5 | | | 55 | 23·39 | 57 | 517·5 | 58 | 836·1 | | | 30 | 15·42 |
| | | 30 | 21·24 | 32 | 522·5 | 33 | 753·8 | 1 | 7 | 0 | 24·15 | 2 | 517·0 | 3 | 835·8 | | | 35 | 15·25 |
| | | 35 | 20·89 | 37 | 523·7 | | | | | 10 | 21·90 | 12 | 519·1 | 13 | 831·4 | | | 40 | 14·85 |
| | | 45 | 19·37 | 47 | 521·8 | 48 | 754·3 | | | 15 | 22·33 | 17 | 520·1 | 18 | 830·2 | | | 45 | 14·64 |
| | | 50 | 18·82 | 52 | 521·7 | 53 | 756·1 | | | 30 | 19·93 | 32 | 520·7 | 33 | 827·6 | | | 50 | 14·80 |
| | | 55 | 18·77 | 57 | 522·3 | | | | | 35 | 19·24 | 37 | 514·8 | 38 | 832·9 | | | 55 | 15·47 |
| 31 | 16 | 0 | 19·14 | 2 | 523·5 | 3 | 758·1 | | | 40 | 16·92 | 42 | 514·9 | 43 | 834·2 | 1 | 19 | 0 | 16·35 |
| 31 | 17 | 0 | 17·91 | 2 | 528·8 | 3 | 753·0 | | | 45 | 15·49 | 47 | 518·4 | 48 | 834·6 | | | 40 | 18·40 |
| | | 20 | 18·20 | 22 | 530·3 | 23 | 746·7 | | | 50 | 16·08 | 52 | 517·4 | 53 | 833·9 | 1 | 20 | 0 | 18·84 |
| | | 25 | 17·56 | 27 | 532·0 | 28 | 748·4 | | | 55 | 16·63 | 57 | 517·8 | 58 | 832·2 | | | | |
| | | 30 | 16·93 | 32 | 531·3 | | | 1 | 8 | 0 | 17·15 | 2 | 515·2 | 3 | 833·6 | 2 | 5 | 0 | 25 22·65 |
| 31 | 18 | 0 | 17·15 | 2 | 522·6 | 3 | 754·5 | | | 10 | 17·46 | 12 | 513·1 | 13 | 834·6 | | | 10 | 20·52 |
| | | 10 | 16·82 | 12 | 519·1 | 13 | 755·1 | | | 15 | 16·41 | 17 | 516·2 | 18 | 832·7 | | | 15 | 17·47 |
| | | 20 | 17·29 | 22 | 520·1 | 23 | 755·0 | | | 20 | 14·73 | 22 | 520·5 | 23 | 829·2 | | | 20 | 12·92 |
| 31 | 19 | 0 | 16·55 | 2 | 519·9 | 3 | 753·8 | | | 25 | 15·49 | 27 | 520·1 | 28 | 828·3 | | | 25 | 11·32 |
| | | | | | | | | | | 30 | 15·47 | 32 | 516·5 | 33 | 829·5 | | | 30 | 11·10 |
| 1 | 3 | 0 | 25 26·97 | 2 | 525·5 | 3 | 779·3 | | | 35 | 12·55 | 37 | 523·3 | 38 | 826·3 | | | 35 | 12·76 |
| | | 5 | 27·61 | 7 | 523·3 | 8 | 785·3 | | | 40 | 11·91 | 42 | 534·0 | 43 | 817·9 | | | 40 | 13·23 |
| | | 10 | 28·94 | 12 | 531·1 | 13 | 788·6 | | | 45 | 07·32 | 47 | 541·0 | 48 | 807·5 | | | 45 | 11·44 |
| | | 15 | 30·00 | 17 | 524·4 | 18 | 790·4 | | | 50 | 06·32 | 52 | 543·7 | 53 | 797·9 | | | 50 | 11·41 |
| | | 20 | 28·83 | 22 | 517·7 | 23 | 790·7 | | | 55 | 06·16 | 57 | 551·8 | 58 | 785·6 | | | 55 | 12·11 |
| | | 25 | 28·72 | 27 | 513·3 | 28 | 794·8 | 1 | 9 | 0 | 09·02 | 2 | 554·4 | 3 | 781·1 | 2 | 6 | 0 | 15·41 |
| | | 30 | 27·89 | 32 | 515·2 | 33 | 794·6 | | | 5 | 12·04 | 7 | 541·3 | 8 | 779·5 | | | 5 | 17·20 |
| | | 50 | 27·89 | 52 | 531·2 | 53 | 809·6 | | | 10 | 14·26 | 12 | 534·5 | 13 | 779·0 | | | 10 | 17·00 |
| | | 55 | 27·62 | 57 | 528·5 | 58 | 812·9 | | | 15 | 14·94 | 17 | 517·0 | 18 | 778·1 | | | 15 | 13·27 |
| 1 | 4 | 0 | 28·27 | 2 | 522·8 | 3 | 817·9 | | | 20 | 08·68 | 22 | 523·5 | 23 | 770·1 | | | 20 | 11·57 |
| | | 5 | 25·26 | 7 | 520·5 | 8 | 816·2 | | | 25 | 07·74 | 27 | 530·7 | 28 | 763·0 | | | 25 | 08·16 |
| | | 10 | 25·31 | 12 | 524·5 | | | | | 30 | 09·30 | 32 | 527·5 | 33 | 760·2 | | | 30 | 08·11 |
| | | 15 | 25·73 | 17 | 519·2 | 18 | 819·7 | | | 35 | 10·90 | 37 | 524·8 | 38 | 758·6 | | | 35 | 11·15 |
| | | 20 | 26·32 | 22 | 517·0 | 23 | 825·2 | | | 40 | 11·14 | 42 | 518·1 | 43 | 754·9 | | | 40 | 13·72 |
| | | 25 | 25·43 | 27 | 513·4 | 28 | 836·7 | | | 45 | 08·12 | 47 | 519·3 | 48 | 757·2 | | | 45 | 16·57 |
| | | 30 | 24·84 | 32 | 508·9 | 33 | 848·8 | | | 50 | 07·87 | 52 | 525·0 | 53 | 751·8 | | | 50 | 17·51 |
| | | 35 | 22·67 | 37 | 509·1 | 38 | 860·6 | | | 55 | 10·70 | 57 | 522·9 | 58 | 751·1 | | | 55 | 17·54 |
| | | 40 | 19·79 | 42 | 507·3 | 43 | 869·8 | 1 | 10 | 0 | 13·16 | 2 | 511·2 | 3 | 753·7 | 2 | 7 | 0 | 20·40 |
| | | 45 | 10·18 | | | | | | | 5 | 12·29 | 7 | 507·5 | 8 | 757·5 | | | 5 | 24·97 |
| | | 47 | 09·42 | 47 | 514·1 | 48 | 864·9 | | | 10 | 13·34 | 12 | 506·4 | 13 | 760·2 | | | 10 | 27·21 |
| | | 50 | 10·70 | 52 | 522·8 | 53 | 858·7 | | | 15 | 15·47 | 17 | 496·3 | 18 | 767·2 | | | 15 | 26·28 |
| | | 55 | 12·85 | 57 | 528·0 | 58 | 858·2 | | | 20 | 13·70 | 22 | 493·9 | 23 | 771·5 | | | 20 | 27·91 |
| 1 | 5 | 0 | 17·78 | 2 | 519·3 | 3 | 857·9 | | | 25 | 11·24 | 27 | 500·5 | 28 | 770·6 | | | 25 | 26·77 |
| | | 5 | 16·92 | 7 | 519·8 | 8 | 855·3 | | | 30 | 10·81 | 32 | 507·1 | 33 | 771·4 | | | 30 | 25·02 |
| | | 10 | 18·08 | 12 | 519·4 | 13 | 853·4 | | | 40 | 13·97 | 42 | 511·5 | 43 | 774·1 | | | 35 | 23·99 |

BIFILAR. $k$=0·000140. BALANCE. $k$=0·0000085.

| Bifilar Corrected. | | Balance Corrected. | | Gött. Mean Time. | Declination. | | Bifilar Corrected. | | Balance Corrected. | | Gött. Mean Time. | Declination. | | Bifilar Corrected. | | Balance Corrected. | |
|---|---|---|---|---|---|---|---|---|---|---|---|---|---|---|---|---|---|
| Min. | Sc. Div. | Min. | Mic. Div. | d. h. | Min. | ° ′ | Min. | Sc. Div. | Min. | Mic. Div. | d. h. | Min. | ° ′ | Min. | Sc. Div. | Min. | Mic. Div. |
| 47 | 512·1 | 48 | 774·8 | 2 7 | 40 | 25 24·17 | 42 | 515·4 | 43 | 818·4 | 2 13 | 55 | 25 19·21 | 57 | 509·6 | 58 | 715·8 |
| 52 | 511·0 | 53 | 776·1 | | 45 | 24·28 | 47 | 517·5 | 48 | 812·3 | 2 14 | 0 | 19·01 | 2 | 510·1 | 3 | 715·6 |
| 57 | 512·6 | 58 | 776·9 | | 50 | 23·61 | 52 | 518·1 | 53 | 808·5 | | 5 | 19·01 | 7 | 509·0 | 8 | 715·2 |
| 2 | 512·7 | 3 | 776·8 | | 55 | 22·94 | 57 | 520·8 | 58 | 803·0 | | 10 | 17·09 | 12 | 510·4 | 13 | 713·5 |
| 7 | 511·6 | 8 | 778·3 | 2 8 | 0 | 22·87 | 2 | 520·0 | 3 | 800·7 | | 15 | 15·58 | 17 | 511·3 | 18 | 711·0 |
| 12 | 511·8 | 13 | 777·7 | | 5 | 22·89 | 7 | 518·9 | 8 | 797·7 | | 20 | 13·12 | 22 | 515·5 | 23 | 708·7 |
| 17 | 512·3 | 18 | 777·5 | 2 9 | 0 | 20·02 | 2 | 520·5 | 3 | 774·9 | | 25 | 11·49 | 27 | 517·7 | 28 | 708·3 |
| 22 | 512·5 | 23 | 777·0 | 2 11 | 0 | 17·49 | 2 | 517·1 | 3 | 763·9 | | 30 | 10·41 | 32 | 516·1 | 33 | 709·1 |
| 27 | 513·5 | 28 | 776·6 | | 5 | 17·49 | | | | | | 35 | 10·21 | 37 | 512·5 | 38 | 711·6 |
| 32 | 514·6 | 33 | 776·7 | | 10 | 19·17 | 12 | 511·3 | 13 | 754·5 | | 40 | 09·52 | 42 | 511·3 | 43 | 716·1 |
| 37 | 516·0 | 38 | 776·2 | | 15 | 19·05 | 17 | 508·5 | 18 | 750·6 | | 45 | 10·77 | 47 | 508·1 | 48 | 718·8 |
| 42 | 516·2 | 43 | 774·6 | | 20 | 21·50 | 22 | 520·2 | 23 | 734·8 | | 50 | 12·56 | 52 | 503·5 | 53 | 724·9 |
| 2 | 512·2 | 3 | 777·7 | | 25 | 22·91 | 27 | 511·0 | 28 | 704·3 | | 55 | 13·16 | 57 | 501·1 | 58 | 727·3 |
| | | | | | 30 | 22·87 | 32 | 506·5 | 33 | 671·4 | 2 15 | 0 | 13·52 | 2 | 502·4 | 3 | 728·4 |
| 2 | 518·4 | 3 | 765·5 | | | | 34 | 504·5 | | | | 5 | 14·20 | 7 | 503·3 | 8 | 729·7 |
| 7 | 518·4 | 8 | 767·1 | | 35 | 24·69 | 36 | 500·5 | | | | 10 | 14·20 | 12 | 505·4 | 13 | 730·9 |
| 12 | 518·9 | 13 | 767·0 | | | | 37 | 499·7 | 38 | 655·3 | | 15 | 14·28 | 17 | 506·7 | 18 | 733·2 |
| 17 | 519·1 | | | | | | 39 | 494·0 | | | | 20 | 15·34 | 22 | 506·4 | 23 | 735·4 |
| 22 | 519·3 | 23 | 763·6 | | 40 | 25·43 | 41 | 489·9 | | | | 25 | 15·81 | 27 | 507·6 | 28 | 739·3 |
| 27 | 518·4 | | | | | | 42 | 487·8 | 43 | 653·5 | | 30 | 16·21 | 32 | 509·1 | 33 | 739·4 |
| 32 | 517·9 | 33 | 763·5 | | | | 44 | 485·5 | | | | 35 | 16·89 | 37 | 510·2 | 38 | 740·6 |
| 37 | 517·6 | | | | 45 | 21·83 | 46 | 492·7 | | | | 40 | 17·83 | | | | |
| 42 | 517·5 | 43 | 764·6 | | | | 47 | 494·7 | 48 | 660·3 | 2 16 | 0 | 17·44 | 2 | 506·9 | 3 | 735·4 |
| 47 | 517·0 | | | | | | 49 | 495·4 | | | | 5 | 16·82 | 7 | 508·5 | 8 | 736·0 |
| 52 | 517·7 | 53 | 769·8 | | 50 | 20·90 | 51 | 490·4 | | | | 10 | 16·99 | 12 | 509·8 | 13 | 735·7 |
| 57 | 516·8 | | | | | | 52 | 485·9 | 53 | 658·3 | | 15 | 18·00 | 17 | 510·1 | 18 | 739·3 |
| 2 | 516·4 | 3 | 772·1 | | | | 54 | 483·3 | | | | 20 | 18·81 | | | | |
| 42 | 513·1 | 43 | 771·2 | | 55 | 21·12 | 56 | 485·8 | | | 2 17 | 0 | 17·08 | 2 | 505·1 | 3 | 717·7 |
| 2 | 513·5 | 3 | 774·8 | | | | 57 | 482·8 | 58 | 648·3 | | 5 | 16·68 | 7 | 506·0 | 8 | 714·2 |
| | | | | | | | 59 | 480·5 | | | | 10 | 15·54 | 12 | 512·2 | 13 | 712·9 |
| 2 | 516·4 | 3 | 778·1 | 2 12 | 0 | 17·54 | 2 | 481·8 | 3 | 670·1 | | 15 | 15·49 | 17 | 514·2 | 18 | 711·1 |
| 12 | 512·3 | 13 | 776·0 | | 5 | 09·39 | 6 | 490·6 | | | | 20 | 15·81 | 22 | 513·4 | 23 | 711·4 |
| 17 | 508·4 | 18 | 791·5 | | | | 7 | 494·1 | 8 | 688·3 | | 25 | 16·50 | 27 | 513·7 | 28 | 714·6 |
| 22 | 510·5 | 23 | 797·4 | | | | 9 | 503·0 | | | | 30 | 17·78 | 32 | 517·1 | 33 | 718·5 |
| 27 | 510·3 | 28 | 805·4 | | 10 | 04·01 | 11 | 511·3 | | | | 45 | 22·62 | 47 | 518·6 | | |
| 32 | 511·7 | 33 | 813·0 | | | | 12 | 514·5 | 13 | 682·6 | | 50 | 22·57 | 52 | 516·7 | 53 | 710·9 |
| 37 | 513·4 | 38 | 815·3 | | | | 14 | 518·2 | | | | 55 | 20·92 | 57 | 522·7 | 58 | 707·4 |
| 42 | 513·4 | 43 | 812·8 | | 15 | 06·54 | 16 | 518·9 | | | 2 18 | 0 | 21·21 | 2 | 522·8 | 3 | 703·5 |
| 47 | 511·2 | 48 | 813·7 | | | | 17 | 517·8 | 18 | 675·2 | | 5 | 18·84 | 7 | 524·8 | 8 | 700·5 |
| 52 | 509·1 | 53 | 815·8 | | | | 19 | 516·9 | | | | 10 | 20·30 | 12 | 528·2 | 13 | 699·0 |
| 57 | 511·2 | 58 | 817·2 | | 20 | 10·58 | 21 | 516·0 | | | | 15 | 20·18 | 17 | 529·8 | 18 | 697·5 |
| 2 | 504·9 | 3 | 827·2 | | | | 22 | 515·1 | 23 | 678·8 | | 20 | 20·11 | 22 | 531·0 | 23 | 695·5 |
| 7 | 495·3 | 8 | 835·1 | | | | 24 | 512·7 | | | | 25 | 20·22 | 27 | 530·0 | 28 | 695·4 |
| 12 | 495·2 | 13 | 842·3 | | 25 | 13·12 | 27 | 508·7 | 28 | 690·9 | | 30 | 19·46 | 32 | 531·9 | 33 | 697·0 |
| 17 | 496·0 | 18 | 845·6 | | | | 29 | 506·7 | | | | 35 | 19·68 | 37 | 532·7 | 38 | 696·1 |
| 22 | 508·8 | 23 | 835·1 | | 30 | 13·56 | 32 | 506·9 | 33 | 705·6 | | 40 | 20·55 | 42 | 528·0 | 43 | 698·0 |
| 27 | 505·7 | 28 | 838·1 | | 35 | 11·00 | 37 | 513·4 | 38 | 711·7 | | 45 | 20·23 | 47 | 526·3 | 48 | 698·8 |
| 32 | 508·6 | 33 | 839·0 | | | | 39 | 516·7 | | | | 55 | 19·75 | 57 | 525·2 | 58 | 702·7 |
| 37 | 511·4 | 38 | 839·7 | | 40 | 11·66 | 42 | 516·7 | 43 | 715·0 | 2 19 | 0 | 19·55 | 2 | 525·0 | 3 | 704·2 |
| 42 | 515·8 | 43 | 836·6 | | | | 44 | 515·6 | | | | 5 | 18·90 | 7 | 525·7 | | |
| 47 | 520·2 | 48 | 831·1 | | 45 | 11·72 | 47 | 516·2 | 48 | 717·4 | | 10 | 18·47 | 12 | 524·9 | 13 | 707·0 |
| 52 | 517·6 | 53 | 831·4 | | | | 49 | 517·3 | | | | 15 | 17·89 | 17 | 524·9 | | |
| 57 | 520·2 | 58 | 824·8 | | 50 | 11·01 | 52 | 517·7 | 53 | 716·7 | | 20 | 17·53 | 22 | 524·6 | 23 | 710·9 |
| 2 | 514·7 | 3 | 823·5 | | 55 | 10·98 | 57 | 516·2 | 58 | 717·8 | | 25 | 17·60 | 27 | 522·0 | 28 | 714·2 |
| 7 | 507·8 | 8 | 832·9 | 2 13 | 0 | 11·00 | 2 | 513·6 | 3 | 719·6 | | 30 | 17·55 | | | | |
| 12 | 504·2 | 13 | 833·0 | | 5 | 10·07 | 7 | 515·3 | 8 | 719·5 | 2 20 | 0 | 18·60 | 2 | 516·5 | 3 | 730·8 |
| 17 | 508·6 | 18 | 829·7 | | 10 | 10·13 | 12 | 516·0 | 13 | 717·0 | | | | | | | |
| 22 | 503·7 | | | | 15 | 10·67 | 17 | 516·5 | 18 | 717·4 | 3 7 | 0 | 25 22·18 | 2 | 522·6 | 3 | 772·9 |
| 27 | 500·7 | 28 | 832·7 | | 40 | 17·09 | 42 | 511·0 | 43 | 713·8 | | 15 | 16·75 | 17 | 493·6 | 18 | 804·6 |
| 32 | 504·5 | 33 | 828·0 | | 45 | 18·07 | 47 | 508·2 | 48 | 713·8 | | 20 | 11·98 | 22 | 493·7 | 23 | 814·0 |
| 37 | 510·8 | 38 | 822·1 | | 50 | 19·51 | 52 | 506·8 | 53 | 715·8 | | 25 | 09·15 | 27 | 498·5 | 28 | 818·0 |

BIFILAR. $k=0·000140$. BALANCE. $k=0·0000085$.

| Gött. Mean Time. | Declination. | | Bifilar Corrected. | | Balance Corrected. | |
|---|---|---|---|---|---|---|
| d. h. | Min. | ° ′ | Min. | Sc. Div. | Min. | Mic. Div. |
| 3 7 | 30 | 25 09·29 | 32 | 499·9 | 33 | 823·0 |
| | 35 | 09·42 | 37 | 512·9 | 38 | 814·1 |
| | 40 | 02·73 | 42 | 540·1 | 43 | 791·4 |
| | | | 44 | 551·1 | | |
| | 45 | 04·07 | 46 | 552·9 | | |
| | | | 47 | 550·7 | 48 | 782·0 |
| | | | 49 | 550·1 | | |
| | 50 | 07·84 | 52 | 550·6 | 53 | 770·8 |
| | | | 54 | 547·5 | | |
| | 55 | 13·10 | 56 | 540·4 | | |
| | | | 57 | 536·6 | 58 | 777·4 |
| 3 8 | 0 | 12·13 | 2 | 527·8 | 3 | 776·0 |
| | 5 | 13·66 | 7 | 524·4 | 8 | 772·7 |
| | 10 | 14·77 | 12 | 526·3 | 13 | 772·3 |
| | 15 | 16·89 | 17 | 522·3 | 18 | 772·3 |
| | 20 | 17·89 | | | | |
| 3 9 | 0 | 15·47 | 2 | 516·8 | 3 | 770·8 |
| | 5 | 15·51 | 7 | 516·5 | 8 | 771·5 |
| 3 10 | 0 | 18·16 | 2 | 516 7 | 3 | 773·3 |
| 3 11 | 0 | 13·61 | 2 | 517·6 | 3 | 772·9 |
| | 10 | 14·48 | 12 | 520·0 | 13 | 764·1 |
| | 20 | 14·67 | 22 | 512·0 | 23 | 768·0 |
| | 25 | 13·16 | 27 | 515·2 | 28 | 768·2 |
| | 30 | 11·66 | 32 | 520·4 | 33 | 760·3 |
| | 35 | 10·67 | 37 | 527·6 | 38 | 759·1 |
| | 40 | 11·03 | 42 | 534·4 | 43 | 754·1 |
| | 45 | 12·73 | 47 | 533·5 | 48 | 752·6 |
| | 50 | 12·58 | 52 | 531·4 | 53 | 749·0 |
| | 55 | 12·22 | 57 | 533·8 | 58 | 744·8 |
| 3 12 | 0 | 12·20 | 2 | 532·6 | 3 | 743·4 |
| | 5 | 12·28 | 7 | 530·5 | 8 | 741·5 |
| | 10 | 12·22 | 12 | 528·8 | 13 | 739·3 |
| | 15 | 11·44 | 17 | 528·9 | 18 | 735·7 |
| | 20 | 09·62 | 22 | 532·0 | 23 | 730·4 |
| | 25 | 08·88 | 27 | 530·2 | 28 | 726·7 |
| | 30 | 08·85 | 32 | 525·2 | 33 | 725·8 |
| | 35 | 08·48 | 37 | 520·3 | 38 | 726·5 |
| | 40 | 08·14 | 42 | 516·2 | 43 | 726·5 |
| | 45 | 07·72 | 47 | 515·4 | | |
| | 50 | 07·40 | 52 | 514·4 | 53 | 723·5 |
| 3 13 | 0 | 06·05 | 2 | 509·0 | 3 | 723·0 |
| | 15 | 08·65 | 17 | 494·3 | 18 | 729·6 |
| | 20 | 08·21 | 22 | 487·2 | 23 | 735·6 |
| | 25 | 08·55 | 27 | 486·1 | 28 | 742·8 |
| | 40 | 17·70 | 42 | 494·8 | 43 | 745·3 |
| 4 0 | 50 | 25 25·26 | 52 | 510·8 | 53 | 802·0 |
| 4 1 | 2 | 24·62 | 3 | 511·0 | 3 | 802·0 |
| 4 13 | 0 | 25 18·37 | 2 | 516·8 | 3 | 760·3 |
| | 20 | 20·03 | 22 | 519·8 | 23 | 757·8 |
| | 30 | 19·61 | 32 | 518·7 | 33 | 754·7 |
| 4 14 | 0 | 23·01 | 2 | 514·5 | 3 | 750·8 |
| | 5 | 22·91 | 7 | 516·0 | 8 | 750·2 |
| | 10 | 22·65 | 12 | 515·8 | 13 | 746·7 |
| | 15 | 21·41 | 17 | 514·9 | 18 | 745·9 |
| | 20 | 20·77 | 22 | 515·2 | | |
| | 25 | 20·85 | 27 | 515·5 | | |
| 4 15 | 0 | 20·70 | 2 | 513·9 | 3 | 736·6 |
| | 15 | 18·50 | 17 | 518·4 | 18 | 735·3 |
| | 20 | 17·94 | 22 | 519·5 | 23 | 735·6 |

| Gött. Mean Time. | Declination. | | Bifilar Corrected. | | Balance Corrected. | |
|---|---|---|---|---|---|---|
| d. h. | Min. | ° ′ | Min. | Sc. Div. | Min. | Mic. Div. |
| 4 15 | 25 | 25 17·56 | 27 | 519·8 | | |
| | 30 | 17·51 | 32 | 519·9 | 33 | 736·0 |
| 4 16 | 0 | 16·62 | 2 | 516·9 | 3 | 743·7 |
| | 10 | 17·46 | 12 | 516·7 | 13 | 749·4 |
| | 15 | 18·03 | 17 | 517·2 | 18 | 749·3 |
| 4 17 | 0 | 19·05 | 2 | 517·1 | 3 | 751·4 |
| 4 18 | 0 | 17·56 | 2 | 520·9 | 3 | 747·8 |
| | 10 | 17·19 | 12 | 521·9 | 13 | 747·8 |
| | 15 | 16·99 | 17 | 521·9 | | |
| | 20 | 16·82 | 22 | 521·5 | 23 | 747·0 |
| | 25 | 16·66 | 27 | 520·3 | 28 | 749·4 |
| | 30 | 16·73 | 32 | 520·0 | 33 | 752·4 |
| | 35 | 17·76 | 37 | 519·5 | 38 | 753·5 |
| | 40 | 18·47 | 42 | 520·3 | 43 | 756·0 |
| | 45 | 18·99 | 47 | 519·4 | 48 | 755·6 |
| | 50 | 18·92 | 52 | 520·7 | 53 | 755·4 |
| | 55 | 19·68 | 57 | 520·5 | 58 | 752·5 |
| 4 19 | 0 | 18·43 | 2 | 520·9 | 3 | 754·5 |
| | 35 | 18·58 | 37 | 522·9 | 38 | 750·9 |
| 4 20 | 0 | 18·63 | 2 | 522·2 | 3 | 750·4 |
| 4 23 | 0 | 21·79 | 2 | 511·4 | 3 | 759·4 |
| | 25 | 22·84 | 27 | 504·1 | 28 | 764·4 |
| | 30 | 22·27 | 32 | 505·3 | 33 | 762·6 |
| 5 0 | 0 | 25·51 | 2 | 502·8 | 3 | 766·1 |
| | 20 | 25·63 | 22 | 501·0 | 23 | 763·9 |
| 5 1 | 0 | 25·68 | 2 | 505·7 | 3 | 765·8 |
| 5 3 | 0 | 25·76 | 2 | 523·8 | 3 | 788·0 |
| | 15 | 23·83 | 17 | 520·1 | 18 | 784·8 |
| | 20 | 23·59 | 22 | 520·2 | | |
| 5 4 | 0 | 21·59 | 2 | 512·2 | 3 | 794·2 |
| 5 7 | 0 | 19·10 | 2 | 513·9 | 3 | 839·6 |
| | 5 | 09·69 | 7 | 532·5 | 8 | 876·5 |
| | 10 | 25 01·72 | 12 | 532·3 | 13 | 893·8 |
| | 15 | 24 56·16 | 17 | 534·7 | 18 | 840·4 |
| | 20 | 25 09·02 | 22 | 537·6 | 23 | 817·1 |
| | 25 | 14·28 | 27 | 547·5 | 28 | 809·7 |
| | 30 | 17·37 | 32 | 518·8 | 33 | 806·8 |
| | 35 | 13·57 | 37 | 508·9 | 38 | 796·7 |
| | 40 | 11·28 | 42 | 523·7 | 43 | 792·8 |
| | 45 | 14·53 | 47 | 521·7 | 48 | 778·1 |
| | 50 | 15·45 | 52 | 528·1 | 53 | 770·8 |
| | 55 | 18·11 | 57 | 524·8 | 58 | 772·7 |
| 5 8 | 0 | 18·72 | 2 | 515·0 | 3 | 775·4 |
| | 5 | 18·90 | 7 | 507·5 | 8 | 782·3 |
| | 10 | 18·32 | 12 | 507·4 | 13 | 791·5 |
| | 15 | 19·62 | 17 | 505·2 | 18 | 796·6 |
| | 20 | 19·51 | 22 | 501·7 | 23 | 800·9 |
| | 25 | 18·14 | 27 | 504·8 | 28 | 804·3 |
| | 30 | 16·84 | 32 | 509·3 | 33 | 807·3 |
| | 35 | 16·12 | 37 | 509·1 | 38 | 812·5 |
| | 40 | 13·47 | 42 | 507·9 | 43 | 818·5 |
| | 45 | 12·23 | 47 | 516·0 | 48 | 815·4 |
| | 50 | 15·94 | 52 | 512·8 | 53 | 818·8 |
| | 55 | 16·82 | 57 | 511·9 | 58 | 820·7 |
| 5 9 | 0 | 16·57 | 2 | 512·5 | 3 | 819·5 |
| | 5 | 12·43 | 7 | 516·5 | 8 | 818·1 |
| | 10 | 07·69 | 12 | 531·4 | 13 | 805·3 |
| | 15 | 12·22 | 17 | 526·0 | 18 | 801·8 |
| | 20 | 16·26 | 22 | 518·8 | 23 | 799·6 |
| | 25 | 20·55 | 27 | 507·7 | 28 | 798·4 |
| | 30 | 21·34 | 32 | 509·6 | 33 | 784·9 |

| Gött. Mean Time. | Declination. | |
|---|---|---|
| d. h. | Min. | ° ′ |
| 5 9 | 35 | 25 22·20 |
| | 40 | 21·03 |
| | 45 | 15·96 |
| | 50 | 23·73 |
| | 55 | 30·25 |
| 5 10 | 0 | 27·01 |
| | 5 | 20·79 |
| | 10 | 20·79 |
| | 15 | 18·41 |
| | 20 | 13·43 |
| | 25 | 12·06 |
| | 30 | 11·51 |
| | 35 | 11·46 |
| | 40 | 13·34 |
| | 45 | 15·31 |
| | 50 | 15·81 |
| | 55 | 14·55 |
| 5 11 | 0 | 12·62 |
| | 5 | 11·42 |
| | 10 | 10·74 |
| | 15 | 15·79 |
| | 20 | 20·40 |
| | 25 | 21·81 |
| | 30 | 23·07 |
| | 35 | 23·01 |
| | 40 | 21·53 |
| | 45 | 18·61 |
| | 50 | 17·49 |
| | 55 | 21·59 |
| 5 12 | 0 | 23·34 |
| | 5 | 22·72 |
| | 10 | 23·58 |
| | 15 | 25·29 |
| | 20 | 25·96 |
| | 25 | 25·02 |
| | 30 | 21·83 |
| | 35 | 19·44 |
| | 40 | 17·46 |
| | 45 | 18·16 |
| | 50 | 18·47 |
| | 55 | 18·63 |
| 5 13 | 0 | 17·42 |
| | 5 | 17·15 |
| | 10 | 17·49 |
| | 14 | 18·16 |
| | 25 | 13·67 |
| | 30 | 11·54 |
| | 35 | 11·19 |
| | 43 | 12·38 |
| | 45 | 12·20 |
| | 50 | 13·64 |
| | 55 | 16·08 |
| 5 14 | 0 | 18·10 |
| | 5 | 18·73 |

BIFILAR. $k$=0·000140. BALANCE. $k$=0·0000085.

Feb. 4$^d$ 1$^h$ (Sunday). In the observations given the magnets have not changed their positions much, but there is evidently a disturbance: the declination and bifilar magnets are vibrating much and irregularly. At 4$^d$ 7$^h$ 50$^m$ a moderate disturbance was noticed, such as on several preceding evenings.

| Bifilar Corrected. | | Balance Corrected. | | Gött. Mean Time. | Declination. | | Bifilar Corrected. | | Balance Corrected. | | Gött. Mean Time. | Declination. | | Bifilar Corrected. | | Balance Corrected. | |
|---|---|---|---|---|---|---|---|---|---|---|---|---|---|---|---|---|---|
| Min. | Sc. Div. | Min. | Mic. Div. | d. h. | Min. | ° ′ | Min. | Sc. Div. | Min. | Mic. Div. | d. h. | Min. | ° ′ | Min. | Sc. Div. | Min. | Mic. Div. |
| 37 | 504·1 | 38 | 782·7 | 5 14 | 10 | 25 19·39 | 12 | 505·8 | 13 | 740·6 | 6 10 | 45 | 25 16·30 | | | | |
| 42 | 499·9 | 43 | 790·6 | | 15 | 19·44 | 17 | 508·5 | 18 | 741·2 | 6 11 | 0 | 16·52 | 2 | 519·0 | 3 | 739·7 |
| 47 | 516·3 | 48 | 785·3 | | 20 | 19·95 | 22 | 508·8 | 23 | 743·8 | | 15 | 17·89 | 17 | 516·0 | 18 | 741·9 |
| 52 | 521·1 | 53 | 755·5 | | 25 | 21·41 | 27 | 511·2 | 28 | 745·5 | 6 12 | 0 | 17·42 | 2 | 518·7 | 3 | 744·0 |
| 57 | 504·5 | 58 | 745·9 | | 30 | 22·28 | 32 | 511·2 | 33 | 741·2 | 6 13 | 0 | 19·39 | 2 | 516·8 | 3 | 751·5 |
| 2 | 504·0 | 3 | 746·4 | | 35 | 21·76 | 37 | 512·2 | 38 | 735·4 | | 30 | 23·25 | 32 | 514·5 | 33 | 742·2 |
| 7 | 514·1 | 8 | 756·0 | | 40 | 22·20 | 42 | 507·2 | 43 | 728·9 | | 35 | 22·33 | 37 | 513·6 | 38 | 739·6 |
| 12 | 513·7 | 13 | 770·7 | | 45 | 21·80 | 47 | 500·8 | 48 | 725·3 | | 40 | 20·80 | 42 | 514·5 | 43 | 736·7 |
| 17 | 508·3 | 18 | 773·4 | | 50 | 20·58 | 52 | 497·4 | 53 | 724·0 | | 45 | 19·75 | 47 | 515·6 | 48 | 736·7 |
| 22 | 511·6 | 23 | 775·3 | | 55 | 19·50 | 57 | 499·8 | 58 | 726·6 | | 50 | 19·31 | 52 | 516·2 | 53 | 735·6 |
| 27 | 513·8 | 28 | 773·6 | 5 15 | 0 | 18·70 | 2 | 504·2 | 3 | 729·5 | | 55 | 19·21 | 57 | 515·3 | 58 | 736·3 |
| 32 | 516·4 | 33 | 774·4 | | 5 | 19·51 | 7 | 503·4 | 8 | 706·3 | 6 14 | 0 | 18·81 | 2 | 515·4 | 3 | 737·7 |
| 37 | 520·7 | 38 | 773·5 | | 10 | 19·31 | 12 | 507·9 | 13 | 716·7 | | 15 | 19·07 | 17 | 513·8 | 18 | 742·0 |
| 42 | 522·1 | 43 | 773·3 | | 15 | 19·51 | 17 | 508·0 | 18 | 723·2 | 6 15 | 0 | 19·10 | 2 | 515·3 | 3 | 748·6 |
| 47 | 521·6 | | | | 20 | 19·71 | | | | | 6 16 | 0 | 16·79 | 2 | 513·4 | 3 | 754·4 |
| 52 | 519·2 | 53 | 777·9 | 5 16 | 0 | 19·58 | 2 | 513·3 | 3 | 759·8 | | 15 | 17·42 | 17 | 512·8 | 18 | 759·5 |
| 57 | 515·6 | 58 | 780·4 | | 10 | 18·03 | 12 | 510·4 | 13 | 759·1 | 6 17 | 0 | 18·23 | 2 | 513·9 | 3 | 758·3 |
| 2 | 515·4 | 3 | 778·0 | | 15 | 18·84 | 17 | 506·1 | 18 | 756·4 | | | | | | | |
| 7 | 518·2 | 8 | 772·6 | | 20 | 19·76 | 22 | 500·4 | 23 | 753·0 | 7 6 | 0 | 25 17·22 | 2 | 515·9 | 3 | 783·8 |
| 12 | 527·1 | 13 | 761·9 | | 25 | 20·79 | 27 | 497·7 | 28 | 749·7 | | 15 | 12·78 | 17 | 512·8 | 18 | 794·4 |
| 17 | 515·5 | 18 | 761·0 | | 30 | 20·97 | 32 | 496·0 | 33 | 743·4 | | 20 | 12·95 | 22 | 515·0 | 23 | 797·8 |
| 19 | 517·3 | | | | 35 | 20·45 | 37 | 497·5 | 38 | 738·4 | | 25 | 14·06 | 27 | 516·7 | 28 | 798·7 |
| 21 | 514·5 | | | | 40 | 20·56 | 42 | 498·9 | 43 | 736·0 | | 30 | 14·80 | 32 | 517·4 | 33 | 799·2 |
| 22 | 513·2 | 23 | 748·2 | 5 17 | 0 | 22·91 | 2 | 511·7 | 3 | 752·1 | | 35 | 15·44 | 37 | 518·7 | 38 | 796·8 |
| 24 | 509·5 | | | | 5 | 23·34 | 7 | 513·5 | 8 | 754·5 | | 50 | 16·95 | 52 | 521·5 | 53 | 790·0 |
| 27 | 504·8 | 28 | 734·6 | | 10 | 23·43 | 12 | 514·9 | 13 | 756·3 | 7 7 | 0 | 18·68 | 2 | 522·1 | 3 | 787·0 |
| 29 | 501·7 | | | | 15 | 24·32 | 17 | 514·2 | 18 | 756·0 | | 15 | 20·18 | 17 | 519·9 | 18 | 783·5 |
| 31 | 500·7 | | | | 20 | 24·32 | 22 | 513·5 | 23 | 757·6 | 7 8 | 0 | 20·85 | 2 | 520·5 | 3 | 771·5 |
| 32 | 500·7 | 33 | 723·9 | | 25 | 23·95 | | | | | | 5 | 18·60 | 7 | 516·1 | 8 | 777·9 |
| 34 | 499·8 | | | 5 18 | 0 | 21·32 | 2 | 517·8 | 3 | 747·4 | | 10 | 20·85 | 12 | 510·1 | 13 | 783·2 |
| 37 | 498·6 | 38 | 733·3 | | 10 | 19·39 | 12 | 517·3 | 13 | 749·0 | | 15 | 19·98 | 17 | 518·5 | 18 | 777·2 |
| 42 | 499·7 | 43 | 727·6 | | 15 | 18·50 | 17 | 520·0 | 18 | 751·4 | | 20 | 19·51 | 22 | 521·0 | 23 | 774·9 |
| 47 | 504·7 | 48 | 729·6 | | 20 | 18·81 | 22 | 521·2 | 23 | 754·2 | | 25 | 19·61 | 27 | 519·3 | 28 | 776·3 |
| 52 | 512·5 | | | | 25 | 19·48 | 27 | 520·3 | 28 | 755·3 | | 30 | 20·18 | 32 | 515·0 | 33 | 778·8 |
| 57 | 505·3 | 58 | 738·1 | 5 19 | 0 | 18·79 | 2 | 519·3 | 3 | 752·4 | | 35 | 19·71 | 37 | 516·4 | 38 | 778·1 |
| 2 | 502·6 | 3 | 737·9 | | | | | | | | | 40 | 19·28 | 42 | 517·4 | 43 | 778·1 |
| 7 | 504·8 | 8 | 731·5 | 6 6 | 0 | 25 16·38 | 2 | 512·7 | 3 | 798·4 | 7 9 | 0 | 09·89 | 2 | 500·7 | 3 | 785·8 |
| 12 | 505·7 | 13 | 724·4 | | 10 | 14·80 | 12 | 506·9 | 13 | 790·0 | | 5 | 06·01 | 7 | 501·7 | 8 | 786·1 |
| 17 | 499·9 | 18 | 719·5 | | 15 | 11·57 | 17 | 509·2 | 18 | 788·5 | | 10 | 25 01·12 | 12 | 506·3 | 13 | 784·0 |
| 22 | 493·5 | 23 | 714·6 | | 20 | 08·38 | 22 | 517·9 | 23 | 787·0 | | 14 | 24 59·19 | | | | |
| 27 | 492·2 | 28 | 712·6 | | 25 | 08·68 | 27 | 522·3 | 28 | 785·6 | | 15 | 25 00·18 | 17 | 523·2 | 18 | 778·9 |
| 32 | 497·5 | 33 | 713·8 | | 30 | 08·45 | 32 | 525·7 | 33 | 784·6 | | | | 19 | 526·6 | | |
| 37 | 503·3 | 38 | 713·2 | | 35 | 08·56 | 37 | 527·7 | 38 | 783·1 | | 20 | 08·18 | 22 | 522·9 | 23 | 772·6 |
| 42 | 509·9 | 43 | 714·5 | | 40 | 10·18 | 42 | 526·7 | 43 | 782·5 | | 25 | 12·22 | 27 | 521·0 | 28 | 763·4 |
| 47 | 512·8 | 48 | 717·6 | | 45 | 11·46 | | | | | | 30 | 09·02 | 32 | 520·9 | 33 | 754·1 |
| 52 | 513·0 | 53 | 716·3 | | 55 | 12·25 | 57 | 522·5 | 58 | 779·5 | | 35 | 01·78 | 37 | 531·2 | 38 | 738·2 |
| 57 | 513·4 | 58 | 710·2 | 6 7 | 0 | 12·95 | 2 | 522·8 | 3 | 779·0 | | 40 | 03·30 | 42 | 529·5 | 43 | 733·1 |
| 2 | 519·1 | 3 | 701·1 | | 5 | 13·84 | 7 | 522·3 | 8 | 775·6 | | 45 | 03·25 | 47 | 521·6 | 48 | 731·6 |
| 7 | 520·0 | 8 | 698·5 | | 10 | 15·01 | 12 | 521·3 | 13 | 774·3 | | 50 | 02·45 | 52 | 518·1 | 53 | 731·0 |
| 12 | 518·1 | 13 | 694·6 | | 15 | 15·91 | | | | | | 55 | 02·45 | 57 | 509·4 | 58 | 733·7 |
| | | | | 6 8 | 0 | 19·58 | 2 | 520·8 | 3 | 763·1 | 7 10 | 0 | 01·31 | 2 | 506·0 | 3 | 736·5 |
| 22 | 499·9 | 23 | 683·9 | 6 9 | 0 | 17·89 | 2 | 521·1 | 3 | 762·2 | | 5 | 01·21 | 7 | 508·1 | 8 | 736·4 |
| 27 | 501·3 | 28 | 689·3 | 6 10 | 0 | 20·03 | 2 | 547·4 | 3 | 735·2 | | 10 | 04·07 | 12 | 500·3 | 13 | 740·3 |
| 32 | 509·3 | 33 | 697·8 | | 5 | 19·41 | 7 | 541·9 | 8 | 731·0 | | 15 | 05·05 | 17 | 493·3 | 18 | 744·8 |
| 37 | 507·0 | 38 | 707·5 | | 10 | 19·55 | 12 | 531·8 | 13 | 729·3 | | 20 | 03·97 | 22 | 495·5 | 23 | 743·9 |
| 42 | 501·9 | 43 | 715·5 | | 15 | 18·23 | 17 | 527·6 | 18 | 728·6 | | 25 | 04·98 | 27 | 500·8 | 28 | 742·2 |
| 47 | 504·5 | 48 | 716·9 | | 20 | 16·66 | 22 | 528·1 | 23 | 728·3 | | 30 | 08·06 | 32 | 501·0 | 33 | 745·0 |
| 52 | 494·8 | 53 | 725·2 | | 25 | 16·92 | 27 | 525·3 | 28 | 729·9 | | 35 | 10·18 | 37 | 500·2 | 38 | 747·1 |
| 57 | 495·1 | 58 | 729·7 | | 30 | 17·15 | 32 | 520·0 | 33 | 731·9 | | 40 | 11·37 | 42 | 501·0 | 43 | 746·3 |
| 2 | 498·9 | 3 | 735·2 | | 35 | 16·19 | 37 | 519·3 | 38 | 733·0 | | 45 | 11·84 | 47 | 502·9 | 48 | 745·7 |
| 7 | 503·0 | 8 | 739·6 | | 40 | 16·15 | 42 | 519·0 | 43 | 732·7 | | 50 | 13·19 | 52 | 501·3 | 53 | 746·9 |

BIFILAR. $k=0{\cdot}000140$. BALANCE. $k=0{\cdot}0000085$.

| Gött. Mean Time. | Declination. | | Bifilar Corrected. | | Balance Corrected. | |
|---|---|---|---|---|---|---|
| d. h. | Min. | ° ′ | Min. | Sc. Div. | Min. | Mic. Div. |
| 7 10 | 55 | 25 13·54 | 57 | 501·0 | 58 | 746·8 |
| 7 11 | 0 | 13·41 | 2 | 502·0 | 3 | 746·8 |
| | 5 | 12·78 | 7 | 502·7 | 8 | 741·2 |
| | 10 | 12·85 | 12 | 503·9 | 13 | 742·6 |
| | 20 | 12·85 | 22 | 505·1 | 23 | 742·4 |
| | 25 | 12·96 | 27 | 506·0 | | |
| | 30 | 12·49 | 32 | 509·4 | 33 | 732·2 |
| | 35 | 11·64 | 37 | 507·5 | 38 | 732·3 |
| | 40 | 10·78 | 42 | 507·6 | 43 | 739·1 |
| | 50 | 09·44 | 52 | 505·1 | 53 | 742·6 |
| 7 12 | 0 | 08·08 | 2 | 506·8 | 3 | 745·0 |
| | 10 | 10·09 | 12 | 503·9 | 13 | 748·1 |
| | 20 | 11·69 | 22 | 507·8 | 23 | 743·8 |
| | 30 | 13·43 | 32 | 509·2 | 33 | 741·4 |
| | 40 | 15·05 | 42 | 512·8 | 43 | 742·6 |
| | 50 | 14·64 | 52 | 513·3 | | |
| 7 13 | 0 | 14·57 | 2 | 511·0 | 3 | 738·9 |
| 7 14 | 0 | 11·28 | 2 | 514·1 | 3 | 716·8 |
| | 15 | 13·29 | 17 | 511·6 | 18 | 720·5 |
| | 35 | 15·54 | 37 | 510·7 | 38 | 735·8 |
| 7 15 | 0 | 19·78 | 2 | 511·0 | 3 | 739·6 |
| 8 4 | 0 | 25 22·71 | 2 | 524·5 | 3 | 789·3 |
| | 15 | 24·66 | 17 | 517·6 | 18 | 794·9 |
| | 20 | 24·82 | 22 | 514·6 | 23 | 796·5 |
| | 25 | 23·14 | 27 | 507·4 | 28 | 803·2 |
| | 30 | 23·95 | 32 | 507·6 | 33 | 810·0 |
| | 35 | 22·80 | 37 | 505·9 | 38 | 817·5 |
| | 40 | 22·13 | 42 | 504·0 | 43 | 829·5 |
| | 45 | 20·03 | 47 | 501·7 | 48 | 841·7 |
| | 50 | 17·58 | 52 | 495·2 | 53 | 850·5 |
| | 55 | 13·12 | 57 | 504·5 | 58 | 849·8 |
| 8 5 | 0 | 13·49 | 2 | 512·5 | 3 | 846·3 |
| | 5 | 16·15 | 7 | 515·4 | 8 | 845·0 |
| | 10 | 18·90 | 12 | 515·3 | 13 | 842·2 |
| | 15 | 21·12 | 17 | 512·2 | 18 | 839·9 |
| | 20 | 22·28 | 22 | 513·1 | 23 | 835·1 |
| | 25 | 22·96 | 27 | 512·4 | 28 | 831·4 |
| | 30 | 22·80 | 32 | 514·0 | 33 | 826·7 |
| | 45 | 21·66 | 47 | 516·9 | 48 | 815·1 |
| 8 6 | 0 | 21·71 | 2 | 515·7 | 3 | 812·4 |
| | 35 | 22·20 | 37 | 512·5 | 38 | 813·1 |
| 8 7 | 0 | 19·46 | 2 | 508·8 | 3 | 817·8 |
| | 10 | 21·76 | 12 | 513·9 | 13 | 816·4 |
| 8 8 | 0 | 20·20 | 2 | 517·2 | 3 | 795·4 |
| 8 9 | 0 | 17·49 | 2 | 525·7 | 3 | 776·2 |
| | 10 | 17·49 | 12 | 518·7 | 13 | 777·5 |
| | 20 | 14·89 | 22 | 526·8 | 23 | 770·5 |
| | 25 | 13·39 | 27 | 531·5 | 28 | 767·3 |
| | 30 | 14·40 | 32 | 529·6 | 33 | 767·5 |
| | 35 | 15·27 | 37 | 523·9 | 38 | 767·7 |
| | 40 | 15·20 | 42 | 521·6 | | |
| | 45 | 15·39 | 47 | 523·3 | 48 | 765·5 |
| | 50 | 16·62 | 52 | 519·9 | 53 | 765·2 |
| | 55 | 16·79 | 57 | 517·6 | 58 | 765·0 |
| 8 10 | 0 | 17·53 | 2 | 515·5 | 3 | 764·9 |
| | 15 | 13·16 | 17 | 511·4 | 18 | 762·4 |
| | 20 | 10·58 | 22 | 513·3 | | |
| | 25 | 08·73 | 27 | 522·3 | 28 | 757·7 |
| | 30 | 08·50 | 32 | 526·7 | 33 | 756·9 |
| | 35 | 09·98 | 37 | 527·8 | | |

| Gött. Mean Time. | Declination. | | Bifilar Corrected. | | Balance Corrected. | |
|---|---|---|---|---|---|---|
| d. h. | Min. | ° ′ | Min. | Sc. Div. | Min. | Mic. Div. |
| 8 10 | 40 | 25 12·82 | 42 | 522·9 | 43 | 756·8 |
| | 55 | 12·88 | 57 | 524·3 | 58 | 746·9 |
| 8 11 | 0 | 12·65 | 2 | 526·3 | 3 | 743·0 |
| | 5 | 13·36 | 7 | 526·8 | 8 | 741·2 |
| | 10 | 14·37 | 12 | 526·2 | 13 | 739·2 |
| | 25 | 17·46 | 27 | 515·2 | 28 | 743·3 |
| | 30 | 17·56 | 32 | 513·8 | | |
| | 35 | 17·49 | 37 | 512·9 | 38 | 745·5 |
| 8 12 | 0 | 18·90 | 2 | 517·2 | 3 | 743·6 |
| | 5 | 19·10 | 7 | 516·8 | 8 | 746·6 |
| 8 13 | 0 | 18·88 | 2 | 519·0 | 3 | 748·8 |
| 8 14 | 0 | 26·52 | 2 | 528·1 | 3 | 723·2 |
| | 5 | 25·73 | 7 | 524·7 | 8 | 711·0 |
| | 10 | 24·05 | 12 | 522·6 | 13 | 700·7 |
| | 15 | 22·28 | 17 | 523·2 | 18 | 689·4 |
| | 20 | 20·18 | 22 | 521·9 | 23 | 685·0 |
| | 25 | 18·10 | 27 | 521·5 | 28 | 682·3 |
| | 30 | 17·02 | 32 | 517·7 | 33 | 680·6 |
| | 35 | 17·09 | 37 | 510·6 | 38 | 681·8 |
| | 40 | 16·32 | 42 | 513·6 | 43 | 687·1 |
| | 45 | 16·75 | 47 | 518·4 | 48 | 690·6 |
| | 50 | 17·55 | 52 | 522·4 | 53 | 693·9 |
| | 55 | 18·47 | 57 | 522·9 | 58 | 693·3 |
| 8 15 | 0 | 18·85 | 2 | 521·9 | 3 | 694·4 |
| | 5 | 18·37 | 7 | 519·2 | 8 | 694·0 |
| | 10 | 17·54 | 12 | 516·9 | 13 | 695·6 |
| | 15 | 16·76 | 17 | 515·1 | 18 | 697·7 |
| | 20 | 16·16 | 22 | 515·0 | | |
| | 30 | 16·30 | 32 | 514·8 | 33 | 706·8 |
| | 35 | 16·77 | 37 | 514·7 | 38 | 710·0 |
| 8 16 | 0 | 18·13 | 2 | 513·6 | 3 | 724·9 |
| | 5 | 18·16 | | | | |
| 8 17 | 0 | 18·70 | 2 | 517·5 | 3 | 744·9 |
| | 5 | 18·77 | 7 | 517·7 | 8 | 744·7 |
| 8 18 | 0 | 18·16 | 2 | 520·2 | 3 | 747·9 |
| 10 9 | 0 | 25 07·13 | 2 | 523·7 | 3 | 766·8 |
| | 5 | 07·20 | 7 | 520·1 | 8 | 769·3 |
| | 10 | 07·91 | 12 | 514·5 | 13 | 772·2 |
| | 15 | 07·37 | 17 | 514·7 | 18 | 772·4 |
| | 20 | 08·83 | 22 | 516·6 | 23 | 773·9 |
| | 25 | 10·87 | 27 | 514·1 | 28 | 775·7 |
| | 30 | 11·66 | 32 | 512·9 | 33 | 776·2 |
| | 35 | 12·78 | 37 | 513·3 | 38 | 775·1 |
| | 40 | 13·93 | 42 | 509·9 | 43 | 776·9 |
| | 45 | 13·99 | 47 | 507·3 | 48 | 777·4 |
| | 50 | 13·52 | 52 | 507·8 | 53 | 776·2 |
| | 55 | 13·46 | 57 | 509·0 | 58 | 775·7 |
| 10 10 | 0 | 13·46 | 2 | 509·2 | 3 | 775·5 |
| | 30 | 17·39 | 32 | 510·6 | 33 | 772·2 |
| | 35 | 17·10 | 37 | 508·5 | 38 | 772·6 |
| | 40 | 16·21 | 42 | 509·8 | 43 | 772·0 |
| | 50 | 15·61 | 52 | 510·6 | 53 | 771·4 |
| 10 11 | 0 | 16·46 | 2 | 511·0 | 3 | 772·5 |
| | 10 | 16·16 | 12 | 516·1 | 13 | 764·5 |
| | 20 | 18·25 | 22 | 518·6 | 23 | 762·7 |
| | 30 | 20·38 | 32 | 521·3 | 33 | 739·1 |
| | 35 | 23·70 | 37 | 526·7 | 38 | 725·6 |
| | 40 | 24·75 | 42 | 521·3 | 43 | 716·1 |
| | 45 | 24·32 | 47 | 518·5 | 48 | 704·0 |
| | 50 | 23·49 | 52 | 516·7 | 53 | 695·3 |

| Gött. Mean Time. | Declination. | |
|---|---|---|
| d. h. | Min. | ° ′ |
| 10 11 | 55 | 25 22·37 |
| 10 12 | 0 | 21·44 |
| | 5 | 19·81 |
| | 10 | 17·60 |
| | 15 | 14·92 |
| | 20 | 12·78 |
| | 25 | 12·80 |
| 11 13 | 0 | 25 14·68 |
| * | 5 | 14·13 |
| | 10 | 14·03 |
| | 15 | 14·05 |
| | 20 | 14·30 |
| | 40 | 16·32 |
| 11 14 | 0 | 17·46 |
| | 5 | 17·48 |
| | 30 | 16·18 |
| 11 15 | 0 | 19·53 |
| 11 16 | 0 | 17·40 |
| | 30 | 18·67 |
| 11 17 | 0 | 17·29 |
| | 5 | 17·09 |
| | 10 | 16·79 |
| | 15 | 17·00 |
| | 20 | 17·37 |
| | 25 | 17·49 |
| | 30 | 17·33 |
| 11 18 | 0 | 17·84 |
| 13 8 | 0 | 25 17·00 |
| | 15 | 18·16 |
| | 45 | 19·64 |
| 13 9 | 0 | 19·53 |
| 13 11 | 0 | 17·42 |
| | 15 | 18·74 |
| 13 12 | 0 | 18·23 |
| | 10 | 18·70 |
| 13 13 | 0 | 18·79 |
| 15 5 | 0 | 25 17·98 |
| | 20 | 18·02 |
| | 30 | 19·28 |
| | 40 | 20·18 |
| 15 6 | 0 | 20·67 |
| | 15 | 20·40 |
| | 25 | 20·40 |
| 15 7 | 0 | 19·58 |
| 15 10 | 0 | 15·54 |
| | 5 | 16·30 |
| | 10 | 17·58 |
| 15 11 | 0 | 18·70 |
| 16 9 | 0 | 25 19·01 |
| | 10 | 16·48 |
| | 15 | 14·48 |
| | 20 | 12·78 |
| | 25 | 12·22 |
| | 30 | 12·20 |
| | 35 | 11·84 |
| | 40 | 13·49 |
| | 45 | 15·11 |

BIFILAR. $k$=0·000140. BALANCE. $k$=0·0000085.

* See notes on the Aurora Borealis, *after* the *Extra Observations of Magnetometers.*

| Bifilar Corrected. | | Balance Corrected. | | Gött. Mean Time. | | Declination. | | Bifilar Corrected. | | Balance Corrected. | | Gött. Mean Time. | | Declination. | | Bifilar Corrected. | | Balance Corrected. | |
|---|---|---|---|---|---|---|---|---|---|---|---|---|---|---|---|---|---|---|---|
| Min. | Sc. Div. | Min. | Mic. Div. | d. | h. | Min. | ° ′ | Min. | Sc. Div. | Min. | Mic. Div. | d. | h. | Min. | ° ′ | Min. | Sc. Div. | Min. | Mic. Div. |
| 57 | 515·1 | 58 | 690·3 | 16 | 9 | 50 | 25 15·02 | 52 | 520·6 | 53 | 740·9 | 22 | 7 | 20 | 25 15·14 | 22 | 526·6 | | |
| 2 | 511·8 | 3 | 685·1 | 16 | 10 | 0 | 16·35 | 2 | 521·3 | 3 | 739·2 | | | 25 | 14·84 | 27 | 528·2 | 28 | 747·8 |
| 7 | 508·1 | 8 | 679·3 | | | 30 | 14·87 | 32 | 521·0 | 33 | 734·2 | | | 30 | 13·46 | 32 | 533·7 | 33 | 746·9 |
| 12 | 509·3 | 13 | 680·7 | | | 40 | 15·47 | 42 | 516·2 | 43 | 738·6 | | | 35 | 15·04 | 37 | 535·4 | 38 | 745·9 |
| 17 | 512·9 | 18 | 681·8 | | | 50 | 14·84 | 52 | 519·5 | 53 | 738·1 | | | 40 | 17·02 | 42 | 532·3 | | |
| 22 | 515·8 | 23 | 685·5 | 16 | 11 | 0 | 15·36 | 2 | 519·5 | 3 | 737·3 | | | 45 | 19·71 | 47 | 526·3 | 48 | 746·4 |
| 27 | 516·0 | 28 | 689·6 | | | | | | | | | | | 50 | 20·42 | 52 | 519·5 | | |
| | | | | 16 | 18 | 0 | 25 19·04 | 2 | 535·7 | 3 | 701·4 | | | 55 | 20·79 | 57 | 512·9 | 58 | 750·9 |
| 2 | 516·0 | 3 | 741·3 | | | 10 | 17·24 | 12 | 534·7 | 13 | 701·3 | 22 | 8 | 0 | 18·72 | 2 | 515·2 | 3 | 752·4 |
| 7 | 514·9 | 8 | 740·8 | | | 20 | 15·24 | 22 | 531·7 | 23 | 705·7 | | | 5 | 17·54 | 7 | 521·0 | 8 | 752·5 |
| 12 | 514·9 | 13 | 743·1 | | | 25 | 15·94 | 27 | 530·1 | 28 | 706·8 | | | 10 | 18·61 | 12 | 523·0 | 13 | 754·8 |
| 17 | 513·4 | 18 | 744·9 | | | 30 | 16·13 | 32 | 527·0 | 33 | 705·9 | | | 15 | 20·06 | 17 | 518·2 | 18 | 757·8 |
| 22 | 513·0 | 23 | 746·1 | | | 35 | 16·08 | 37 | 526·7 | 38 | 711·4 | | | 20 | 20·33 | 22 | 514·3 | 23 | 759·8 |
| 42 | 508·5 | 43 | 751·0 | 16 | 19 | 0 | 17·53 | 2 | 523·8 | 3 | 713·9 | | | 25 | 20·18 | 27 | 512·0 | 28 | 763·7 |
| 2 | 513·3 | 3 | 747·4 | | | | | | | | | | * | 30 | 20·43 | 32 | 508·1 | 33 | 766·8 |
| 7 | 514·3 | 8 | 747·1 | 17 | 10 | 0 | 25 12·13 | 2 | 542·0 | 3 | 713·8 | | | 35 | 20·18 | 37 | 503·3 | 38 | 770·2 |
| 32 | 516·6 | 33 | 750·3 | | | 5 | 11·81 | 7 | 541·8 | 8 | 711·0 | | | 40 | 17·68 | 42 | 505·2 | 43 | 772·0 |
| 2 | 514·2 | 3 | 749·7 | | | 10 | 12·04 | 12 | 538·9 | 13 | 712·9 | | | 45 | 16·13 | 47 | 510·0 | 48 | 771·9 |
| 2 | 515·4 | 3 | 745·3 | | | 15 | 11·81 | 17 | 533·4 | 18 | 714·5 | | | 50 | 15·69 | 52 | 512·1 | 53 | 772·6 |
| 32 | 518·3 | 33 | 745·5 | | | 20 | 11·41 | 22 | 528·9 | 23 | 715·8 | | | 55 | 16·52 | 57 | 513·2 | 58 | 773·5 |
| 2 | 519·2 | 3 | 746·6 | | | 25 | 11·88 | 27 | 524·6 | 28 | 717·6 | 22 | 9 | 0 | 16·68 | 2 | 515·9 | 3 | 771·8 |
| 7 | 518·9 | 8 | 746·5 | | | 30 | 11·59 | 32 | 520·1 | 33 | 720·3 | | | 10 | 17·22 | 12 | 518·7 | 13 | 769·2 |
| 12 | 518·0 | | | | | 35 | 12·08 | 37 | 518·6 | 38 | 721·3 | | | 25 | 16·82 | 27 | 519·5 | 28 | 765·2 |
| 17 | 517·8 | 18 | 750·4 | | | 40 | 12·87 | 42 | 517·0 | 43 | 723·9 | 22 | 10 | 0 | 17·56 | 2 | 521·4 | 3 | 758·6 |
| 22 | 518·3 | 23 | 749·8 | | | 45 | 14·41 | 47 | 516·9 | 48 | 724·6 | 22 | 11 | 0 | 18·16 | 2 | 522·5 | 3 | 749·5 |
| 27 | 518·9 | 28 | 750·2 | 17 | 11 | 0 | 18·72 | 2 | 523·6 | 3 | 723·5 | | | 10 | 18·86 | 12 | 522·0 | 13 | 755·8 |
| 32 | 518·9 | | | | | 5 | 18·88 | 7 | 523·6 | 8 | 720·7 | 22 | 12 | 0 | 17·60 | 2 | 523·5 | 3 | 739·6 |
| 2 | 520·2 | 3 | 749·3 | | | 10 | 18·84 | 12 | 527·8 | 13 | 716·0 | | | | | | | | |
| | | | | | | 15 | 18·85 | 17 | 530·7 | 18 | 710·7 | 26 | 4 | 0 | 25 19·91 | 2 | 523·5 | 3 | 745·7 |
| 2 | 522·2 | 3 | 751·3 | | | 20 | 18·70 | 22 | 530·9 | 23 | 706·7 | | | 20 | 18·90 | 22 | 520·7 | 23 | 752·1 |
| 17 | 524·0 | 18 | 751·6 | | | 25 | 18·43 | 27 | 529·7 | 28 | 704·2 | 26 | 5 | 0 | 18·23 | 2 | 525·6 | 3 | 751·8 |
| | | | | | | 30 | 18·13 | 32 | 528·7 | 33 | 703·0 | | | | | | | | |
| 2 | 523·8 | 3 | 748·3 | | | 35 | 17·29 | 37 | 527·2 | 38 | 701·7 | 28 | 5 | 0 | 25 17·98 | 2 | 535·3 | 3 | 751·2 |
| 2 | 522·6 | 3 | 754·6 | | | 40 | 16·79 | 42 | 525·4 | 43 | 701·2 | | | 5 | 18·45 | 7 | 533·6 | 8 | 749·5 |
| 17 | 521·8 | 18 | 753·4 | | | 45 | 15·92 | 47 | 524·6 | 48 | 700·1 | | | 10 | 18·72 | 12 | 533·1 | 13 | 748·7 |
| 2 | 528·5 | 3 | 734·0 | | | 50 | 15·47 | 52 | 522·4 | 53 | 700·8 | 28 | 6 | 0 | 18·75 | 2 | 533·1 | 3 | 746·3 |
| 12 | 525·5 | 13 | 733·1 | | | 55 | 15·44 | 57 | 520·3 | 58 | 703·3 | 28 | 7 | 0 | 20·30 | 2 | 518·5 | 3 | 764·9 |
| 2 | 522·7 | 3 | 737·2 | 17 | 12 | 0 | 15·66 | 2 | 519·3 | 3 | 706·7 | | | 5 | 14·46 | 7 | 512·7 | 8 | 766·7 |
| | | | | | | 5 | 16·54 | 7 | 518·8 | 8 | 707·2 | | | 10 | 09·26 | 12 | 514·9 | 13 | 776·0 |
| 2 | 515·7 | 3 | 725·7 | | | 10 | 16·25 | 12 | 518·5 | 13 | 708·0 | | | 15 | 06·70 | 17 | 515·7 | 18 | 783·6 |
| 22 | 521·9 | 23 | 730·8 | | | 15 | 16·08 | 17 | 518·9 | 18 | 707·5 | | | 20 | 04·71 | 22 | 510·7 | 23 | 794·3 |
| 32 | 522·8 | 33 | 730·6 | | | 20 | 16·08 | 22 | 520·5 | 23 | 707·0 | | | 25 | 03·40 | 27 | 515·7 | 28 | 804·8 |
| 42 | 521·9 | 43 | 729·1 | | | 25 | 17·09 | 27 | 521·6 | 28 | 705·1 | | | 30 | 03·06 | 32 | 513·1 | 33 | 813·7 |
| 2 | 520·9 | 3 | 727·2 | | | 30 | 18·85 | 32 | 521·4 | 33 | 704·0 | | | 35 | 04·91 | 37 | 504·4 | 38 | 813·0 |
| 17 | 522·2 | 18 | 724·7 | | | 35 | 19·49 | | | | | | | 40 | 03·34 | 42 | 505·0 | 43 | 810·7 |
| 27 | 522·1 | | | | | | | | | | | | | 45 | 03·92 | 47 | 507·7 | 48 | 807·0 |
| 2 | 523·7 | 3 | 723·4 | 21 | 13 | 0 | 25 14·84 | 2 | 532·7 | 3 | 709·4 | | | 50 | 04·28 | 52 | 506·3 | 53 | 805·3 |
| 2 | 516·0 | 3 | 742·9 | | | 10 | 14·87 | 12 | 530·0 | 13 | 708·7 | | | 55 | 05·90 | 57 | 502·6 | 58 | 809·2 |
| 7 | 516·8 | 8 | 743·2 | | | 20 | 14·67 | 22 | 525·8 | 23 | 711·0 | 28 | 8 | 0 | 06·51 | 2 | 500·7 | 3 | 813·6 |
| 12 | 516·8 | 13 | 744·8 | | | 30 | 14·10 | 32 | 521·6 | 33 | 713·7 | | | 5 | 07·44 | 7 | 504·4 | 8 | 816·5 |
| 2 | 516·7 | 3 | 738·3 | | | 40 | 13·99 | 42 | 517·7 | 43 | 717·5 | | | 10 | 09·42 | 12 | 505·0 | 13 | 819·1 |
| | | | | | | 50 | 14·10 | 52 | 517·2 | 53 | 720·5 | | | 15 | 11·10 | 17 | 505·8 | 18 | 817·1 |
| 2 | 522·2 | 3 | 730·4 | 21 | 14 | 0 | 14·78 | 2 | 517·9 | 3 | 723·4 | | | 20 | 12·08 | 22 | 511·4 | 23 | 816·4 |
| 12 | 517·8 | 13 | 732·5 | | | 30 | 15·22 | 32 | 517·8 | 33 | 725·6 | | | 25 | 13·25 | 27 | 510·2 | 28 | 813·7 |
| 17 | 519·0 | | | | | 40 | 16·72 | 42 | 519·4 | 43 | 725·9 | | | 30 | 13·39 | 32 | 509·6 | 33 | 810·3 |
| 22 | 520·0 | 23 | 735·3 | 21 | 15 | 0 | 16·16 | 2 | 517·5 | 3 | 727·1 | | | 35 | 14·60 | 37 | 507·2 | 38 | 809·1 |
| 27 | 520·0 | 28 | 737·2 | | | 20 | 16·12 | 22 | 517·2 | 23 | 730·1 | | | 40 | 15·14 | 42 | 501·7 | 43 | 811·0 |
| | | | | 21 | 16 | 0 | 16·75 | 2 | 518·3 | 3 | 731·4 | | | 45 | 13·44 | 47 | 500·2 | 48 | 810·0 |
| 37 | 524·4 | 38 | 737·9 | | | | | | | | | | | 50 | 11·98 | 52 | 502·6 | 53 | 805·1 |
| 42 | 520·8 | 43 | 741·1 | 22 | 7 | 0 | 25 20·74 | 2 | 525·1 | 3 | 746·2 | | | 55 | 12·45 | 57 | 504·5 | 58 | 800·2 |
| 47 | 520·4 | 48 | 741·5 | | | 15 | 18·23 | 17 | 522·5 | 18 | 746·1 | 28 | 9 | 0 | 13·32 | 2 | 505·3 | 3 | 800·0 |

BIFILAR. $k=0{\cdot}000140$. BALANCE. $k=0{\cdot}0000085$.

Feb. 22d 12h. The declination magnet moving slightly.
Feb. 28d 7h 30m. Clock 16s slow; set right.
* See notes on Aurora Borealis, *after* the *Extra Observations of Magnetometers.*

| Gött. Mean Time. | Declination. | | Bifilar Corrected. | | Balance Corrected. | |
|---|---|---|---|---|---|---|
| d. h. | Min. | ° ′ | Min. | Sc. Div. | Min. | Mic. Div. |
| 28 9 | 15 | 25 13·46 | 17 | 504·2 | 18 | 802·2 |
| | 20 | 13·32 | 22 | 506·3 | 23 | 803·8 |
| | 25 | 14·53 | 27 | 507·8 | 28 | 805·6 |
| | 35 | 15·47 | 37 | 520·9 | 38 | 804·5 |
| | 40 | 14·67 | 42 | 521·7 | 43 | 796·7 |
| | 45 | 13·83 | 47 | 521·6 | 48 | 789·8 |
| | 50 | 11·84 | 52 | 518·8 | 53 | 784·3 |
| | 55 | 09·98 | 57 | 513·5 | 58 | 776·8 |
| 28 10 | 0 | 08·70 | 2 | 507·1 | 3 | 765·4 |
| | 5 | 06·51 | 7 | 501·2 | 8 | 753·9 |
| | 10 | 06·16 | 12 | 496·3 | 13 | 743·0 |
| | 15 | 05·65 | 17 | 495·8 | 18 | 735·2 |
| | 20 | 05·30 | 22 | 488·6 | 23 | 735·2 |
| | 25 | 04·95 | 27 | 485·4 | 28 | 741·5 |
| | 30 | 03·21 | 32 | 487·4 | 33 | 748·7 |
| | 35 | 01·14 | 37 | 496·4 | 38 | 749·5 |
| | 40 | 00·85 | 42 | 490·8 | 43 | 749·0 |
| | 45 | 02·13 | 47 | 487·5 | 48 | 749·0 |
| | 50 | 02·53 | 52 | 490·1 | 53 | 747·4 |
| | 55 | 02·72 | 57 | 491·1 | 58 | 742·8 |
| 28 11 | 0 | 03·99 | 2 | 491·2 | 3 | 741·3 |
| | 5 | 05·83 | 7 | 490·3 | 8 | 746·3 |
| | 10 | 06·56 | 12 | 494·3 | 13 | 751·5 |
| | 15 | 07·85 | 17 | 497·7 | 18 | 756·8 |
| | 20 | 09·46 | 22 | 500·7 | 23 | 758·3 |
| | 25 | 10·61 | 27 | 505·8 | | |
| | 30 | 11·89 | 32 | 507·2 | 33 | 758·5 |
| | 35 | 12·78 | 37 | 511·6 | 38 | 755·9 |
| | 40 | 12·80 | 42 | 516·5 | 43 | 751·3 |
| | 45 | 13·54 | 47 | 516·6 | 48 | 750·5 |
| | 50 | 13·94 | 52 | 517·1 | 53 | 745·3 |
| | 55 | 12·78 | 57 | 517·4 | 58 | 742·5 |
| 28 12 | 0 | 13·16 | 2 | 514·0 | 3 | 743·7 |
| | 5 | 13·17 | 7 | 514·2 | 8 | 744·0 |
| | 10 | 13·20 | 12 | 516·3 | | |
| | 15 | 12·93 | 17 | 515·6 | 18 | 745·5 |
| | 20 | 12·72 | 22 | 512·2 | 23 | 750·4 |
| | 25 | 12·20 | 27 | 513·4 | | |
| | 30 | 12·62 | 32 | 515·0 | 33 | 753·3 |
| | 35 | 13·69 | 37 | 516·4 | 38 | 755·6 |
| | 40 | 14·60 | 42 | 516·5 | | |
| | 45 | 14·70 | 47 | 518·1 | 48 | 758·5 |
| | 50 | 15·47 | 52 | 519·5 | | |
| | 55 | 16·55 | 57 | 519·2 | 58 | 759·6 |
| 28 13 | 0 | 16·86 | 2 | 518·6 | 3 | 761·6 |
| | 5 | 18·10 | 7 | 519·3 | | |
| | 10 | 18·57 | 12 | 517·5 | 13 | 762·6 |
| | 45 | 17·58 | 47 | 517·5 | 48 | 762·2 |
| 28 14 | 0 | 14·94 | 2 | 512·6 | 3 | 759·1 |
| | 5 | 13·47 | 7 | 510·1 | 8 | 759·0 |
| | 10 | 12·69 | 12 | 509·9 | | |
| | 15 | 12·78 | 17 | 510·1 | 18 | 761·3 |
| | 20 | 13·44 | 22 | 512·4 | | |
| | 25 | 13·59 | 27 | 509·0 | 28 | 763·1 |
| | 30 | 14·46 | 32 | 509·7 | 33 | 765·6 |
| | 35 | 15·56 | 37 | 511·1 | | |
| | 40 | 15·74 | 42 | 510·5 | 43 | 764·5 |
| | 45 | 15·38 | 47 | 509·4 | 48 | 761·2 |
| | 50 | 14·70 | 52 | 507·5 | 53 | 759·7 |
| | 55 | 14·53 | 57 | 506·2 | 58 | 757·7 |
| 28 15 | 0 | 15·81 | 2 | 504·9 | 3 | 756·7 |

| Gött. Mean Time. | Declination. | | Bifilar Corrected. | | Balance Corrected. | |
|---|---|---|---|---|---|---|
| d. h. | Min. | ° ′ | Min. | Sc. Div. | Min. | Mic. Div. |
| 28 15 | 5 | 25 17·46 | 7 | 505·6 | | |
| | 10 | 19·98 | 12 | 506·3 | 13 | 751·7 |
| | 15 | 22·72 | 17 | 507·2 | 18 | 746·1 |
| | 20 | 23·56 | 22 | 508·1 | 23 | 736·0 |
| | 25 | 22·91 | 27 | 508·9 | 28 | 724·9 |
| | 30 | 21·48 | 32 | 509·6 | 33 | 715·1 |
| | 35 | 21·51 | 37 | 511·4 | 38 | 703·9 |
| | 40 | 22·01 | 42 | 512·3 | 43 | 691·0 |
| | 45 | 24·26 | 47 | 516·6 | 48 | 678·7 |
| | 50 | 25·56 | 52 | 521·9 | 53 | 664·0 |
| | 55 | 22·96 | 57 | 516·2 | 58 | 640·1 |
| 28 16 | 0 | 20·08 | 2 | 520·4 | 3 | 617·4 |
| | 5 | 15·81 | 7 | 515·2 | 8 | 596·2 |
| | 10 | 11·27 | 12 | 507·4 | 13 | 575·3 |
| | 15 | 06·98 | 17 | 488·0 | 18 | 553·1 |
| | 20 | 25 02·66 | 22 | 483·0 | 23 | 545·1 |
| | 25 | 24 59·51 | 27 | 481·3 | 28 | 547·9 |
| | 30 | 24 57·35 | 32 | 481·8 | 33 | 562·4 |
| | 35 | 24 56·40 | 37 | 486·3 | 38 | 578·0 |
| | 40 | 24 57·59 | 42 | 495·0 | 43 | 598·3 |
| | 45 | 24 59·24 | 47 | 497·4 | 48 | 613·7 |
| | 50 | 25 01·36 | 52 | 499·1 | 53 | 628·6 |
| | 55 | 02·37 | 57 | 503·7 | 58 | 635·5 |
| 28 17 | 0 | 03·21 | 2 | 505·1 | 3 | 641·6 |
| | 5 | 03·37 | 7 | 511·3 | 8 | 642·8 |
| | 10 | 02·53 | 12 | 514·6 | 13 | 642·9 |
| | 15 | 01·25 | 17 | 518·8 | 18 | 644·6 |
| | 20 | 01·34 | 22 | 521·4 | 23 | 648·1 |
| | 25 | 02·79 | 27 | 523·0 | 28 | 651·6 |
| | 30 | 04·53 | 32 | 520·4 | 33 | 656·9 |
| | 35 | 06·74 | 37 | 518·5 | 38 | 660·3 |
| | 40 | 08·19 | 42 | 519·3 | 43 | 662·0 |
| | 45 | 09·35 | 47 | 518·9 | 48 | 665·2 |
| | 50 | 09·47 | 52 | 525·8 | | |
| 28 18 | 0 | 12·65 | 2 | 527·6 | 3 | 664·5 |
| | 10 | 13·54 | 12 | 527·8 | 13 | 663·3 |
| | 35 | 14·80 | 37 | 520·7 | 38 | 678·4 |
| 28 19 | 0 | 17·31 | 2 | 513·9 | 3 | 695·5 |
| | 10 | 17·80 | 12 | 514·9 | 13 | 698·7 |
| | 15 | 16·05 | 17 | 519·2 | 18 | 698·8 |
| | 20 | 16·01 | 22 | 522·1 | 23 | 698·6 |
| | 25 | 16·08 | 27 | 523·0 | 28 | 700·6 |
| | 35 | 16·21 | 37 | 520·4 | 38 | 705·7 |
| 28 20 | 0 | 15·81 | 2 | 518·9 | 3 | 717·7 |
| | 30 | 14·98 | 32 | 520·0 | 33 | 724·9 |
| 28 21 | 0 | 15·64 | 2 | 521·2 | 3 | 724·2 |
| | 5 | 16·75 | 7 | 522·7 | 8 | 724·1 |
| | 10 | 16·99 | 12 | 521·1 | 13 | 722·8 |
| 28 22 | 0 | 17·00 | 2 | 513·5 | 3 | 735·1 |
| 28 23 | 0 | 20·52 | 2 | 509·6 | 3 | 739·7 |
| | 10 | 21·06 | 12 | 513·0 | 13 | 738·6 |
| 29 0 | 0 | 22·27 | 2 | 510·6 | 3 | 752·3 |
| 29 7 | 0 | 25 17·83 | 2 | 511·3 | 3 | 778·9 |
| | 20 | 14·80 | 22 | 513·0 | 23 | 784·6 |
| 29 8 | 0 | 18·16 | 2 | 519·5 | 3 | 777·4 |
| 29 10 | 0 | 13·23 | 2 | 535·2 | 3 | 753·7 |
| | 5 | 12·87 | 7 | 544·3 | 8 | 747·0 |
| | 10 | 14·80 | 12 | 541·5 | 13 | 746·9 |
| | 15 | 17·58 | 17 | 530·3 | 18 | 749·6 |
| | 20 | 17·73 | 22 | 526·9 | 23 | 748·1 |

| Gött. Mean Time. | Declination. | |
|---|---|---|
| d. h. | Min. | ° ′ |
| 29 10 | 25 | 25 15·01 |
| | 30 | 13·32 |
| | 35 | 13·43 |
| | 40 | 15·44 |
| | 45 | 14·87 |
| | 50 | 13·99 |
| 29 11 | 0 | 15·49 |
| | 5 | 14·83 |
| | 10 | 13·61 |
| | 15 | 12·33 |
| | 20 | 12·65 |
| | 40 | 16·13 |
| | 45 | 16·65 |
| | 50 | 16·78 |
| | 55 | 16·42 |
| 29 12 | 0 | 16·15 |
| | 5 | 16·38 |
| | 10 | 16·01 |
| 29 13 | 0 | 16·55 |
| 29 15 | 0 | 15·01 |
| | 5 | 15·51 |
| | 10 | 16·32 |
| | 15 | 16·08 |
| 29 16 | 0 | 15·54 |
| 1 10 | 0 | 25 16·06 |
| | 5 | 15·71 |
| | 10 | 15·74 |
| | 15 | 14·59 |
| | 20 | 13·10 |
| | 25 | 11·82 |
| | 30 | 10·95 |
| | 35 | 10·94 |
| | 40 | 12·03 |
| | 45 | 12·83 |
| | 50 | 14·11 |
| | 55 | 15·36 |
| 1 11 | 0 | 16·08 |
| | 15 | 16·80 |
| | 25 | 15·45 |
| | 35 | 15·27 |
| 1 12 | 0 | 14·96 |
| 1 19 | 0 | 25 16·05 |
| | 10 | 16·75 |
| | 15 | 16·64 |
| | 20 | 16·60 |
| | 25 | 16·21 |
| | 30 | 16·33 |
| 1 20 | 0 | 15·31 |
| | 5 | 15·52 |
| | 10 | 15·45 |
| 1 21 | 0 | 16·80 |
| 2 2 | 0 | 25 26·27 |
| | 10 | 29·66 |
| | 35 | 24·52 |
| | 40 | 24·19 |
| | 45 | 24·59 |
| | 50 | 24·03 |

BIFILAR. $k$=0·000140. BALANCE. $k$=0·0000085.

Feb. 29d. The magnets appear to have been unsteady during the whole of this day.
March 1d. Magnets slightly disturbed throughout the day.

| Bifilar Corrected. | | Balance Corrected. | | Gött. Mean Time. | Declination. | | Bifilar Corrected. | | Balance Corrected. | | Gött. Mean Time. | Declination. | | Bifilar Corrected. | | Balance Corrected. | |
|---|---|---|---|---|---|---|---|---|---|---|---|---|---|---|---|---|---|
| Min. | Sc. Div. | Min. | Mic. Div. | d. h. | Min. | ° ′ | Min. | Sc. Div. | Min. | Mic. Div. | d. h. | Min. | ° ′ | Min. | Sc. Div. | Min. | Mic. Div. |
| 27 | 533·9 | 28 | 743·4 | 2 3 | 0 | 25 24·22 | 2 | 519·4 | 3 | 750·5 | 2 10 | | | 53 | 518·6 | 53 | 562·0 |
| 32 | 539·1 | 33 | 738·7 | | | | | | | | | | | 54 | 513·3 | | |
| 37 | 541·5 | 38 | 735·4 | 2 8 | 0 | 25 19·79 | 2 | 524·8 | 3 | 761·2 | | 55 | 25 17·02 | 55 | 504·5 | | |
| 42 | 533·9 | 43 | 737·7 | | 5 | 17·26 | 7 | 519·7 | 8 | 764·5 | | | | 56 | 509·1 | 56 | 526·9 |
| 47 | 530·4 | 48 | 736·9 | | 10 | 16·05 | 12 | 520·1 | 13 | 770·2 | | 57 | 21·27 | 57 | 517·5 | | |
| 52 | 529·0 | | | | 15 | 16·35 | 17 | 518·8 | 18 | 774·5 | | | | 58 | 522·5 | 58 | 506·7 |
| 2 | 516·3 | 3 | 740·5 | | 20 | 11·69 | 22 | 514·9 | 23 | 776·3 | | 59 | 21·63 | 59 | 513·7 | | |
| 7 | 512·1 | 8 | 746·4 | | 25 | 08·68 | 27 | 516·6 | 28 | 778·6 | 2 11 | 0⅓ | 21·12 | 0 | 505·8 | | |
| 12 | 510·0 | 13 | 748·7 | | 30 | 06·03 | 32 | 523·7 | 33 | 778·5 | | | | 1 | 499·6 | 1 | 454·4 |
| 17 | 512·5 | 18 | 750·4 | | 35 | 04·88 | 37 | 528·4 | 38 | 770·7 | | 2 | 16·92 | 2 | 497·0 | | |
| | | | | | 40 | 01·18 | 42 | 532·0 | 43 | 768·7 | | | | 3 | 498·3 | 3 | 497·0 |
| 42 | 516·9 | 43 | 755·3 | | 45 | 00·62 | 47 | 526·1 | 48 | 771·0 | | 4 | 16·66 | 4 | 496·9 | | |
| 47 | 516·2 | 48 | 755·7 | | 50 | 01·95 | 52 | 524·4 | 53 | 773·5 | | 5 | 17·15 | 6 | 491·4 | 6 | 495·7 |
| 52 | 515·7 | 53 | 755·2 | | 55 | 04·75 | 57 | 519·8 | 58 | 773·7 | | 7 | 14·92 | 7 | 489·2 | 8 | 499·1 |
| 57 | 515·0 | 58 | 754·8 | 2 9 | 0 | 07·94 | 2 | 515·0 | 3 | 774·3 | | 9 | 14·33 | 9 | 488·9 | | |
| 2 | 517·8 | 3 | 753·5 | | 5 | 12·76 | 7 | 506·6 | 8 | 779·9 | | | | 10 | 486·4 | 10 | 484·8 |
| 7 | 516 9 | 8 | 754·4 | | 10 | 15·17 | 12 | 507·7 | 13 | 779·2 | | 11 | 16·12 | 12 | 485·1 | 12 | 478·4 |
| | | | | | 15 | 23·31 | 17 | 519·6 | 18 | 759·9 | | | | 13 | 482·6 | 13 | 480·5 |
| 2 | 516·8 | 3 | 756·2 | | 16 | 26·84 | 19 | 517·3 | | | | 14 | 17·39 | 14 | 481·0 | | |
| 2 | 515·0 | 3 | 753·8 | | 20 | 31·61 | 22 | 515·7 | 23 | 720·1 | | 15 | 15·81 | 15 | 480·9 | | |
| 7 | 514·2 | 8 | 755·4 | | 21 | 32·51 | 24 | 518·2 | | | | | | 16 | 485·7 | 16 | 504·3 |
| 12 | 513·4 | 13 | 755·5 | * | 25 | 26·23 | 27 | 536·1 | 28 | 666·7 | | 17 | 13·90 | 17 | 483·7 | | |
| 17 | 513·0 | 18 | 755·3 | | 26 | 27·39 | 29 | 531·4 | | | | | | 18 | 480·2 | 18 | 507·6 |
| 2 | 515·5 | 3 | 752·2 | | 30 | 34·05 | 32 | 521·0 | 33 | 624·5 | | 19 | 13·69 | 19 | 478·1 | | |
| | | | | | 31 | 35·31 | 34 | 514·8 | | | | 20 | 12·04 | 20 | 482·0 | 21 | 523·8 |
| 2 | 519·7 | 3 | 769·3 | | 35 | 37·01 | 37 | 496·0 | 38 | 605·1 | | 22 | 08·92 | 22 | 495·6 | | |
| 7 | 518·7 | 8 | 770·6 | | 36 | 36·20 | 39 | 498·6 | | | | | | 23 | 501·6 | 23 | 537·1 |
| 12 | 516·5 | 13 | 772·5 | | 40 | 27·82 | 42 | 507·6 | 43 | 608·1 | | 24 | 09·71 | 24 | 504·6 | | |
| 17 | 517·1 | 18 | 773·0 | | 41 | 25·87 | 44 | 502·6 | | | | 25 | 09·84 | 25 | 504·4 | | |
| 22 | 517·5 | 23 | 772·4 | | 45 | 26·25 | 47 | 490·7 | 48 | 620·8 | | | | 26 | 505·6 | 26 | 554·0 |
| 27 | 519·6 | 28 | 772·3 | | | | 49 | 489·4 | | | | 27 | 10·51 | 27 | 503·8 | | |
| 32 | 520·9 | 33 | 772·0 | | 50 | 15·25 | 52 | 492·6 | 53 | 601·4 | | | | 28 | 500·8 | 28 | 565·0 |
| 37 | 522·8 | 38 | 771·9 | | 51 | 13·05 | 54 | 498·8 | | | | 29 | 09·84 | 29 | 498·6 | | |
| 42 | 522·7 | 43 | 771·8 | | 55 | 08·18 | 57 | 510·1 | 58 | 596·3 | | 30 | 09·39 | 30 | 498·2 | | |
| 47 | 521·7 | 48 | 771·9 | 2 10 | 0 | 06·03 | 2 | 509·6 | 3 | 584·4 | | | | 31 | 499·6 | 31 | 585·5 |
| 52 | 520·2 | 53 | 772·4 | | | | 4 | 510·6 | | | | 32 | 08·55 | 32 | 500·5 | 33 | 596·0 |
| 57 | 523·3 | 58 | 769·2 | | 5 | 09·10 | 7 | 509·7 | 8 | 580·9 | | 34 | 08·63 | | | | |
| 2 | 523·9 | 3 | 768·8 | | | | 9 | 501·0 | | | | 35 | 08·79 | 37 | 512·1 | 38 | 606·9 |
| 17 | 520·3 | 18 | 766·7 | | 10 | 12·25 | 12 | 485·9 | 13 | 567·0 | | 40 | 10·07 | 42 | 512·3 | 43 | 619·1 |
| 27 | 521·4 | | | | | | 14 | 481·6 | | | | 45 | 10·78 | 47 | 511·4 | 48 | 628·1 |
| 37 | 521·5 | 38 | 765·5 | | 15 | 13·09 | 16 | 474·3 | | | | 50 | 11·49 | 52 | 506·7 | 53 | 635·4 |
| 2 | 521·2 | 3 | 763·5 | | | | 17 | 474·7 | 18 | 556·2 | | 55 | 09·66 | 57 | 507·7 | 58 | 629·0 |
| | | | | | | | 19 | 470·6 | | | 2 12 | 0 | 08·85 | | | | |
| 2 | 521·5 | 3 | 754·0 | | 20 | 12·31 | 21 | 479·8 | | | | 2 | 07·52 | 2 | 543·4 | 3 | 581·8 |
| 12 | 521·5 | 13 | 755·1 | | | | 22 | 478·5 | 23 | 559·2 | | 4 | 08·73 | 4 | 564·6 | | |
| 17 | 520·8 | | | | | | 24 | 480·7 | | | | 5 | 10·31 | 5 | 567·5 | | |
| 22 | 521·2 | 23 | 754·3 | | 25 | 12·18 | 27 | 479·5 | 28 | 559·3 | | | | 6 | 567·9 | 6 | 552·8 |
| 27 | 522·3 | | | | | | 29 | 473·3 | | | | 7 | 09·71 | 7 | 565·5 | | |
| | | | | | 30 | 12·75 | 31 | 461·1 | | | | | | 8 | 562·6 | 8 | 535·6 |
| 2 | 525·2 | 3 | 749·6 | | | | 32 | 458·4 | 33 | 574·2 | | 9 | 14·89 | 9 | 557·3 | | |
| 7 | 523·7 | | | | | | 34 | 455·1 | | | | 10 | 15·42 | 10 | 552·5 | | |
| | | | | | 35 | 08·46 | 36 | 461·7 | | | | | | 11 | 549·2 | 11 | 523·6 |
| 2 | 512·2 | 3 | 750·1 | | | | 37 | 463·8 | 38 | 605·5 | | 12 | 16·39 | 12 | 546·0 | | |
| | | | | | | | 39 | 467·9 | | | | | | 13 | 541·8 | 13 | 520·9 |
| 2 | 531·8 | 3 | 744·7 | | 40 | 03·54 | 42 | 468·7 | 43 | 622·3 | | 14 | 17·67 | 14 | 536·0 | | |
| 10 | 543·5 | | | | 41 | 03·30 | 44 | 478·1 | | | | 15 | 18·47 | 15 | 529·0 | | |
| 32 | 504·2 | 33 | 761·4 | | 45 | 02·79 | 46 | 479·5 | | | | | | 16 | 520·2 | 16 | 519·8 |
| 37 | 506·3 | 38 | 760·3 | | 46 | 03·00 | 47 | 477·3 | 48 | 599·3 | | 17 | 18·99 | 17 | 513·1 | | |
| 42 | 509·0 | | | | 48 | 04·08 | 49 | 507·2 | 50 | 584·8 | | | | 18 | 509·4 | 18 | 520·8 |
| 47 | 510·6 | 48 | 757·9 | | 51 | 08·97 | 51 | 513·7 | | | | 19 | 17·39 | 19 | 505·9 | | |
| 52 | 512·7 | 53 | 755·9 | | 52 | 16·05 | 52 | 512·1 | | | | 20 | 16·32 | 20 | 502·7 | | |

BIFILAR. $k$=0·000140. BALANCE. $k$=0·0000085.

March 2d 8h 20m. Clock 30s slow; set right.
March 2d 10h. Clock 3s fast.
March 2d 11h 0m. The observation of the declination was taken 18s after the 0m.
March 2d 12h 0m. The declination magnet commenced to vibrate about 13′. 12h 0m—10m. The bifilar magnet vibrating about 15 divisions.
* See notes on the Aurora Borealis, *after* the *Extra Observations of Magnetometers*.
March 2d 9h 16m. The vibration of the declination magnet suddenly checked.
March 2d 10h 44m—59m. The bifilar magnet vibrating 20 to 30 divisions.

| Gött. Mean Time. | Declination. | | Bifilar Corrected. | | Balance Corrected. | | Gött. Mean Time. | Declination. | | Bifilar Corrected. | | Balance Corrected. | | Gött. Mean Time. | Declination. | |
|---|---|---|---|---|---|---|---|---|---|---|---|---|---|---|---|---|
| d. h. | Min. | ° ′ | Min. | Sc. Div. | Min. | Mic. Div. | d. h. | Min. | ° ′ | Min. | Sc. Div. | Min. | Mic. Div. | d. h. | Min. | ° ′ |
| 2 12 | | | 21 | 499·7 | 21 | 525·6 | 3 16 | 25 | 25 16·72 | 27 | 514·3 | 28 | 695·1 | 4 7 | 10 | 24 56·13 |
| | 22 | 25 13·69 | 22 | 500·5 | | | | 30 | 16·33 | 32 | 513·1 | 33 | 693·8 | | 11 | 56·20 |
| | | | 23 | 502·9 | 23 | 532·8 | | 35 | 15·45 | 37 | 513·7 | 38 | 695·1 | | 14 | 51·46 |
| | 24 | 11·82 | 24 | 504·7 | | | | 40 | 15·30 | 42 | 515·8 | 43 | 695·3 | | 15 | 49·75 |
| | 25 | 11·74 | 25 | 503·7 | | | | 45 | 15·12 | 47 | 516·6 | | | | 16 | 50·38 |
| | | | 26 | 507·5 | 26 | 541·6 | 3 17 | 0 | 15·41 | 2 | 517·0 | 3 | 697·8 | | 19 | 51·50 |
| | 27 | 11·77 | 27 | 514·6 | | | | 5 | 15·09 | 7 | 517·0 | 8 | 699·8 | | 20 | 52·20 |
| | | | 28 | 518·2 | 28 | 546·8 | | 10 | 14·80 | 12 | 517·3 | 13 | 700·9 | | 21 | 52·67 |
| | 29 | 11·27 | 29 | 519·2 | | | | 15 | 15·11 | | | | | | 24 | 54·26 |
| | 30 | 11·05 | 30 | 520·6 | | | 3 18 | 0 | 14·43 | 2 | 520·1 | 3 | 704·6 | | 26 | 53·45 |
| | | | 31 | 521·5 | 31 | 552·6 | | 5 | 15·04 | 7 | 518·4 | 8 | 708·3 | | | |
| | 32 | 10·87 | 32 | 523·4 | | | | 10 | 15·83 | 12 | 516·6 | 13 | 711·0 | | 30 | 52·37 |
| | | | 33 | 525·3 | 33 | 553·9 | | 15 | 16·13 | 17 | 515·0 | 18 | 711·6 | | 34 | 51·66 |
| | 34 | 10·40 | | | | | | 20 | 15·79 | 22 | 516·1 | 23 | 711·1 | | 35 | 51·56 |
| | 35 | 10·51 | | | 36 | 557·0 | 3 19 | 0 | 16·55 | 2 | 517·6 | 3 | 713·5 | | | |
| | 37 | 10·23 | 37 | 535·3 | | | 3 20 | 0 | 17·04 | 2 | 509·8 | 3 | 718·9 | | 40 | 54·15 |
| | | | 38 | 537·7 | 38 | 558·2 | | 10 | 18·90 | 12 | 506·0 | 13 | 723·2 | | 45 | 54·90 |
| | 39 | 10·63 | 39 | 538·8 | | | | 15 | 19·78 | 17 | 504·7 | 18 | 730·0 | | 50 | 54·35 |
| | 40 | 10·88 | 40 | 540·9 | | | | 20 | 20·09 | 22 | 504·1 | 23 | 728·8 | | 55 | 56·28 |
| | | | 41 | 543·1 | 41 | 557·2 | 3 21 | 0 | 22·62 | 2 | 511·9 | 3 | 727·9 | 4 8 | 0 | 59·51 |
| | 42 | 12·18 | 42 | 544·7 | | | | 10 | 20·53 | 12 | 515·9 | 13 | 726·5 | | 5 | 59·16 |
| | | | 43 | 545·5 | 43 | 556·7 | | 35 | 17·46 | 37 | 514·6 | 38 | 733·6 | | 10 | 59·46 |
| | 44 | 13·63 | 44 | 546·0 | | | 3 22 | 0 | 18·13 | 2 | 518·1 | 3 | 733·8 | | 15 | 59·66 |
| | 45 | 14·53 | | | 46 | 557·0 | 4 0 | 0 | 23·79 | 2 | 520·1 | 3 | 727·0 | | 20 | 24 59·68 |
| | 47 | 15·96 | 47 | 545·0 | 48 | 558·1 | | 45 | 23·14 | 47 | 512·9 | 48 | 730·0 | | 25 | 25 00·61 |
| | 49 | 17·15 | | | | | | 50 | 23·11 | 52 | 516·4 | 53 | 729·4 | | 30 | 03·32 |
| | 50 | 17·61 | 52 | 534·2 | 53 | 554·2 | 4 1 | 0 | 22·98 | 2 | 515·8 | 3 | 732·3 | | 35 | 06·03 |
| | 55 | 18·30 | 57 | 527·7 | 58 | 556·2 | 4 3 | 0 | 20·43 | 2 | 513·1 | 3 | 781·5 | | 40 | 07·27 |
| | | | | | | | | 5 | 20·42 | 7 | 515·2 | 8 | 784·7 | | 45 | 09·22 |
| 3 12 | | | 52 | 527·2 | 53 | 632·5 | | 15 | 20·67 | 17 | 521·7 | 18 | 788·4 | | 50 | 11·03 |
| | 55 | 25 24·19 | 57 | 521·2 | 58 | 623·5 | | 20 | 19·71 | 22 | 524·8 | | | | 55 | 12·60 |
| 3 13 | 0 | 24·15 | 2 | 515·1 | 3 | 616·0 | | 50 | 20·56 | 52 | 533·4 | 53 | 781·0 | 4 9 | 0 | 12·08 |
| | 5 | 22·27 | 7 | 512·6 | 8 | 608·3 | | 55 | 19·76 | 57 | 530·7 | | | | 5 | 12·96 |
| | 10 | 19·64 | 12 | 512·5 | 13 | 599·1 | 4 4 | 0 | 20·40 | 2 | 522·6 | 3 | 785·7 | | 10 | 12·93 |
| | 15 | 18·14 | 17 | 511·3 | 18 | 589·6 | | 15 | 20·83 | 17 | 492·1 | 18 | 802·0 | | 15 | 13·22 |
| | 20 | 17·54 | 22 | 508·5 | 23 | 582·9 | | 20 | 17·71 | 22 | 489·9 | 23 | 802·9 | 4 10 | 0 | 25·60 |
| | 25 | 17·86 | 27 | 502·1 | 28 | 580·0 | | 25 | 13·27 | 27 | 503·4 | 28 | 800·0 | | 5 | 27·26 |
| | 30 | 17·78 | 32 | 493·9 | 33 | 579·8 | | 30 | 11·44 | 32 | 518·6 | 33 | 797·3 | | | |
| | 35 | 15·56 | 37 | 488·3 | 38 | 583·8 | | 35 | 11·44 | 37 | 523·8 | 38 | 798·7 | | | |
| | 40 | 11·61 | 42 | 493·5 | 43 | 583·2 | | 40 | 12·36 | 42 | 528·2 | | | | 10 | 22·82 |
| | 45 | 08·65 | 47 | 503·2 | 48 | 584·4 | | 45 | 13·63 | 47 | 532·8 | 48 | 798·3 | | | |
| | 50 | 09·00 | 52 | 511·9 | 53 | 591·8 | | 50 | 14·92 | 52 | 532·2 | 53 | 798·3 | | 14 | 17·06 |
| | 55 | 11·30 | 57 | 514·0 | 58 | 600·3 | | 55 | 16·45 | 57 | 532·0 | 58 | 795·8 | | 15 | 14·65 |
| 3 14 | 0 | 12·11 | 2 | 512·5 | 3 | 606·7 | 4 5 | 0 | 17·53 | 2 | 530·7 | 3 | 794·3 | | | |
| | 5 | 12·11 | 7 | 510·5 | 8 | 612·3 | | 15 | 19·01 | 17 | 527·9 | 18 | 786·0 | | | |
| | 10 | 11·99 | 12 | 509·6 | 13 | 616·9 | | 40 | 18·68 | 42 | 525·6 | 43 | 771·5 | | 19 | 08·75 |
| | 15 | 11·39 | 17 | 510·9 | 18 | 621·9 | | 50 | 18·63 | 52 | 526·7 | | | | 20 | 08·70 |
| | 20 | 11·44 | 22 | 512·0 | 23 | 626·2 | | 55 | 19·15 | | | | | | | |
| | 25 | 12·16 | 27 | 512·1 | 28 | 630·8 | 4 6 | 0 | 17·96 | 2 | 525·2 | 3 | 775·0 | | 24 | 10·36 |
| | 30 | 12·45 | 32 | 510·9 | 33 | 636·8 | | 15 | 18·78 | 17 | 521·9 | 18 | 779·5 | | 25 | 10·54 |
| | 35 | 12·73 | 37 | 508·8 | 38 | 642·3 | | 25 | 19·17 | 27 | 515·4 | 28 | 779·9 | | | |
| | 40 | 12·72 | 42 | 509·0 | 43 | 647·4 | | 30 | 19·14 | 32 | 521·6 | 33 | 778·0 | | | |
| | 45 | 12·75 | 47 | 508·9 | 48 | 651·6 | | 35 | 19·14 | 37 | 519·9 | 38 | 773·9 | | 30 | 15·61 |
| | 50 | 12·04 | 52 | 509·6 | 53 | 655·0 | | 40 | 19·28 | 42 | 521·1 | 43 | 771·2 | | | |
| | 55 | 11·40 | 57 | 511·0 | 58 | 658·8 | | 45 | 18·67 | 47 | 523·5 | 48 | 769·6 | | 34 | 19·51 |
| 3 15 | 0 | 10·77 | 2 | 512·9 | 3 | 662·9 | | 50 | 17·31 | 52 | 525·7 | 53 | 769·7 | | 35 | 19·95 |
| | 5 | 11·34 | 7 | 511·3 | 8 | 666·5 | | 55 | 14·30 | 57 | 510·1 | 58 | 776·7 | | | |
| | 10 | 12·01 | 12 | 509·8 | 13 | 669·2 | 4 7 | 0 | 25 06·48 | 2 | 503·4 | 3 | 782·3 | | 39 | 22·53 |
| | 15 | 11·98 | 17 | 510·4 | 18 | 672·3 | | 5 | 24 59·98 | 6 | 507·5 | | | | 40 | 23·02 |
| 3 16 | 0 | 13·39 | 2 | 512·6 | 3 | 688·8 | | | | 7 | 508·7 | 8 | 784·0 | | | |
| | 20 | 16·15 | 22 | 513·8 | 23 | 695·6 | | 9 | 56·82 | | | | | | 44 | 24·33 |

BIFILAR. $k=0{\cdot}000140$. BALANCE. $k=0{\cdot}0000085$.

March $4^d$ $3^h$ $52^m$. The bifilar attained its highest reading at this time.
March $4^d$ $6^h$ $57^m$. Bifilar magnet vibrating 10 divisions.
March $4^d$ $10^h$ $12^m$. Bifilar magnet vibrating 10 divisions.

| Bifilar Corrected. | | Balance Corrected. | | Gött. Mean Time. | Declination. | | Bifilar Corrected. | | Balance Corrected. | | Gött. Mean Time. | Declination. | | Bifilar Corrected. | | Balance Corrected. | |
|---|---|---|---|---|---|---|---|---|---|---|---|---|---|---|---|---|---|
| Min. | Sc. Div. | Min. | Mic. Div. | d. h. | Min. | ° ′ | Min. | Sc. Div. | Min. | Mic. Div. | d. h. | Min. | ° ′ | Min. | Sc. Div. | Min. | Mic. Div. |
| | | | | 4 10 | 45 | 25 24·48 | 46 | 523·6 | | | 4 20 | 15 | 25 19·46 | 17 | 496·5 | 18 | 731·7 |
| 12 | 508·9 | 13 | 788·9 | | | | 47 | 522·8 | 48 | 613·4 | | | | 19 | 494·2 | | |
| | | | | | 49 | 24·60 | | | | | | 20 | 20·67 | 22 | 490·3 | 23 | 734·8 |
| | | | | | 50 | 24·69 | 51 | 514·3 | | | | | | 24 | 489·1 | | |
| 17 | 530·4 | 18 | 780·4 | | | | 52 | 512·8 | 53 | 618·7 | | 25 | 21·53 | 27 | 487·8 | 28 | 736·9 |
| | | | | | 54 | 22·92 | | | | | | 30 | 22·78 | 32 | 486·7 | 33 | 738·1 |
| | | | | | 55 | 22·69 | 56 | 508·4 | | | | 35 | 24·28 | 37 | 489·1 | 38 | 737·1 |
| 22 | 531·9 | 23 | 781·3 | | | | 57 | 506·9 | 58 | 623·3 | | 40 | 23·79 | 42 | 497·8 | 43 | 732·0 |
| 25 | 536·7 | | | | 59 | 20·79 | | | | | | 45 | 24·22 | 47 | 494·1 | 48 | 733·0 |
| 27 | 528·6 | 28 | 779·3 | 4 11 | 0 | 19·82 | 1 | 506·0 | | | | 50 | 22·71 | 52 | 496·8 | 53 | 731·3 |
| 29 | 528·2 | | | | | | 2 | 507·0 | 3 | 629·3 | | 55 | 19·98 | 57 | 506·1 | 58 | 728·3 |
| 32 | 521·5 | 33 | 777·8 | | 4 | 16·38 | | | | | 4 21 | 0 | 21·16 | 2 | 512·0 | 3 | 729·7 |
| | | | | | 5 | 15·52 | 6 | 509·2 | | | | 5 | 23·48 | 7 | 514·3 | 8 | 732·5 |
| 36 | 525·3 | | | | | | 7 | 511·2 | 8 | 637·0 | | 10 | 23·48 | 12 | 513·0 | | |
| 37 | 526·9 | 38 | 774·2 | | 9 | 12·73 | | | | | | 15 | 23·43 | 17 | 514·2 | 18 | 731·8 |
| 42 | 529·2 | 43 | 773·5 | | 10 | 12·72 | 12 | 517·9 | 13 | 645·1 | | 20 | 23·78 | 22 | 520·5 | 23 | 726·3 |
| 47 | 528·4 | 48 | 770·0 | | 15 | 12·60 | 17 | 519·2 | 18 | 655·3 | | 25 | 22·96 | 27 | 514·5 | 28 | 727·1 |
| 52 | 531·1 | 53 | 764·8 | | 20 | 12·92 | 22 | 517·9 | 23 | 663·5 | | 30 | 25·34 | 32 | 502·4 | 33 | 729·6 |
| 57 | 535·1 | 58 | 760·5 | | 25 | 13·25 | 27 | 516·7 | 28 | 671·2 | | 35 | 23·98 | 37 | 509·9 | 38 | 727·8 |
| 2 | 533·8 | 3 | 757·5 | | 40 | 15·27 | 42 | 516·4 | 43 | 693·3 | | 40 | 22·77 | 42 | 511·0 | 43 | 728·6 |
| 7 | 532·1 | 8 | 751·8 | | 45 | 15·78 | 47 | 515·7 | 48 | 699·0 | | 45 | 21·71 | 47 | 511·9 | 48 | 726·7 |
| 12 | 527·0 | 13 | 751·6 | | 55 | 16·41 | 57 | 516·5 | 58 | 707·7 | | 50 | 20·29 | 52 | 515·8 | | |
| 17 | 518·5 | 18 | 754·5 | 4 12 | 0 | 16·12 | 2 | 517·3 | 3 | 711·7 | | 55 | 19·81 | 57 | 507·3 | 58 | 730·9 |
| 22 | 514·7 | 23 | 755·9 | 4 14 | 0 | 22·13 | 2 | 512·3 | 3 | 677·1 | 4 22 | 0 | 19·98 | 2 | 512·8 | 3 | 732·2 |
| 27 | 515·8 | 28 | 757·0 | | 5 | 21·57 | 7 | 513·9 | 8 | 676·7 | | 5 | 19·61 | 7 | 509·1 | 8 | 735·1 |
| 32 | 513·2 | 33 | 758·8 | | 10 | 22·65 | 12 | 516·1 | 13 | 675·5 | | 10 | 18·65 | 12 | 512·2 | 13 | 734·9 |
| 37 | 512·7 | 38 | 760·2 | | 15 | 23·46 | 17 | 519·8 | 18 | 675·0 | | 15 | 20·27 | 17 | 514·6 | 18 | 735·9 |
| 42 | 517·5 | 43 | 754·9 | | 20 | 25·13 | 22 | 521·3 | 23 | 673·3 | | 20 | 21·53 | 22 | 511·8 | 23 | 739·0 |
| 47 | 517·5 | 48 | 754·0 | | 25 | 26·13 | 27 | 520·3 | 28 | 669·0 | | 25 | 22·01 | 27 | 500·3 | 28 | 740·8 |
| 52 | 513·8 | 53 | 753·3 | | 30 | 26·41 | 32 | 518·6 | 33 | 661·2 | | | | 29 | 502·7 | | |
| 57 | 514·0 | 58 | 751·0 | | 35 | 25·38 | 37 | 515·2 | 38 | 655·0 | | 30 | 19·84 | 32 | 505·0 | 33 | 737·9 |
| 2 | 515·5 | 3 | 748·7 | | 40 | 22·77 | 42 | 514·5 | 43 | 647·6 | | | | 34 | 505·1 | | |
| 7 | 516·2 | 8 | 747·6 | | 45 | 20·30 | 47 | 516·7 | 48 | 641·1 | | 35 | 18·97 | 37 | 508·6 | 38 | 739·0 |
| 12 | 516·8 | 13 | 744·7 | | 50 | 18·20 | 52 | 517·9 | 53 | 634·9 | | | | 39 | 502·1 | | |
| 17 | 516·8 | 18 | 754·5 | | 55 | 17·37 | 57 | 515·9 | 58 | 634·5 | | 40 | 18·97 | 41 | 504·1 | | |
| 2 | 523·8 | 3 | 655·8 | 4 15 | 0 | 17·33 | 2 | 511·9 | 3 | 634·7 | | | | 42 | 506·6 | 43 | 738·3 |
| 6 | 506·7 | | | | 10 | 14·80 | 12 | 511·4 | 13 | 639·2 | | | | 44 | 504·9 | | |
| 7 | 503·3 | 8 | 622·3 | | 15 | 14·64 | 17 | 507·1 | 18 | 644·9 | | 45 | 20·23 | 47 | 503·6 | 48 | 738·7 |
| 9 | 495·1 | | | | 20 | 14·89 | 22 | 505·9 | 23 | 650·1 | | 50 | 20·65 | 52 | 503·2 | 53 | 742·0 |
| 11 | 500·6 | | | | 30 | 13·99 | 32 | 505·7 | 33 | 658·7 | | 55 | 18·77 | 57 | 508·5 | 58 | 738·8 |
| 12 | 503·8 | 13 | 600·8 | | 35 | 14·50 | 37 | 507·6 | 38 | 667·9 | 4 23 | 0 | 19·64 | 2 | 517·1 | 3 | 742·2 |
| | | | | | 40 | 16·80 | 42 | 509·4 | 43 | 673·1 | | 5 | 22·48 | 7 | 499·4 | 8 | 748·3 |
| 15 | 500·9 | | | | 45 | 18·23 | 47 | 506·9 | 48 | 680·6 | | 10 | 20·90 | 12 | 497·6 | 13 | 746·0 |
| 16 | 505·4 | | | | 50 | 19·71 | 52 | 505·6 | 53 | 683·1 | | 15 | 17·07 | 17 | 506·4 | 18 | 747·5 |
| 17 | 509·1 | 18 | 585·3 | | 55 | 20·87 | 57 | 504·0 | 58 | 686·0 | | 20 | 18·60 | 22 | 511·2 | 23 | 748·0 |
| | | | | 4 16 | 0 | 21·10 | 2 | 505·2 | 3 | 688·1 | | 25 | 19·12 | 27 | 509·3 | 28 | 751·2 |
| 21 | 524·3 | | | | 5 | 21·76 | 7 | 504·8 | 8 | 688·2 | | 30 | 19·86 | 32 | 507·6 | 33 | 754·4 |
| 22 | 526·9 | 23 | 676·6 | | 10 | 21·64 | 12 | 505·6 | 13 | 688·8 | | 35 | 22·00 | 37 | 504·3 | 38 | 755·2 |
| | | | | | 25 | 21·71 | 27 | 511·3 | 28 | 681·4 | | 40 | 21·73 | 42 | 501·4 | 43 | 758·6 |
| 26 | 534·7 | | | | 30 | 21·24 | 32 | 510·1 | 33 | 678·8 | | 45 | 21·61 | 47 | 507·7 | 48 | 759·3 |
| 27 | 535·5 | 28 | 584·7 | | 50 | 18·87 | 52 | 513·2 | 53 | 682·8 | | 50 | 25·51 | 52 | 503·3 | 53 | 767·1 |
| 29 | 541·7 | | | 4 17 | 0 | 18·94 | 2 | 515·0 | 3 | 686·9 | | 55 | 22·00 | 57 | 497·8 | 58 | 767·2 |
| 31 | 545·2 | | | 4 19 | 0 | 16·32 | 2 | 518·0 | 3 | 715·9 | 5 0 | 0 | 21·59 | 2 | 500·2 | 3 | 763·9 |
| 32 | 543·8 | 33 | 595·5 | | 5 | 15·47 | 7 | 516·3 | 8 | 716·0 | | 5 | 21·36 | 7 | 504·7 | 8 | 763·5 |
| | | | | | 15 | 15·01 | 17 | 516·3 | 18 | 715·0 | | 10 | 22·69 | 12 | 511·6 | 13 | 763·3 |
| 36 | 539·3 | | | | 20 | 15·22 | 22 | 517·9 | | | | 15 | 22·30 | 17 | 508·9 | 18 | 764·8 |
| 37 | 537·8 | 38 | 603·1 | 4 20 | 0 | 18·65 | 2 | 509·5 | 3 | 722·2 | | 20 | 23·51 | 22 | 504·8 | 23 | 765·4 |
| | | | | | 5 | 18·10 | 7 | 501·8 | 8 | 728·2 | | 25 | 22·84 | 27 | 503·7 | 28 | 764·4 |
| 41 | 532·3 | | | | | | 9 | 499·9 | | | | 30 | 22·89 | 32 | 503·8 | 33 | 763·4 |
| 42 | 530·5 | 43 | 608·0 | | 10 | 18·72 | 12 | 499·4 | 13 | 729·0 | | 35 | 22·74 | 37 | 502·8 | 38 | 763·7 |
| | | | | | | | 14 | 498·0 | | | | | | 52 | 503·0 | 53 | 762·1 |

BIFILAR. $k=0{\cdot}000140$. BALANCE. $k=0{\cdot}0000085$.

March $4^d$ $21^h$ $30^m$. The declination magnet vibrating about 3′.
March $4^d$ $23^h$ $52^m$. The bifilar magnet vibrating 12 divisions.

| Gött. Mean Time. | Declination. | | Bifilar Corrected. | | Balance Corrected. | |
|---|---|---|---|---|---|---|
| d. h. | Min. | ° ′ | Min. | Sc. Div. | Min. | Mic. Div. |
| 5 0 | 55 | 25 22·04 | 57 | 509·5 | 58 | 762·4 |
| 5 1 | 0 | 22·40 | 2 | 510·8 | 3 | 762·6 |
| | 5 | 22·64 | 7 | 512·6 | 8 | 763·6 |
| | 10 | 22·62 | 12 | 513·6 | 13 | 763·7 |
| | 15 | 22·27 | 17 | 514·5 | 18 | 764·2 |
| | 35 | 22·77 | 37 | 519·9 | 38 | 764·6 |
| | 40 | 24·19 | 42 | 531·0 | 43 | 765·3 |
| | 45 | 26·72 | 47 | 534·3 | 48 | 769·2 |
| | 50 | 26·94 | 52 | 529·7 | 53 | 773·0 |
| | 55 | 27·32 | 57 | 526·8 | 58 | 776·1 |
| 5 2 | 0 | 24·17 | 2 | 524·8 | 3 | 778·0 |
| | 5 | 27·12 | 7 | 525·3 | 8 | 780·0 |
| | 10 | 27·19 | 12 | 526·2 | 13 | 783·2 |
| | 15 | 28·65 | 17 | 528·2 | 18 | 785·0 |
| | 20 | 28·62 | 22 | 518·6 | 23 | 789·3 |
| | 25 | 28·04 | 27 | 510·1 | 28 | 794·7 |
| | 30 | 24·94 | 32 | 505·2 | 33 | 800·4 |
| | 35 | 22·11 | 37 | 503·4 | 38 | 810·1 |
| | 39 | 19·53 | | | | |
| | 40 | 19·48 | 41 | 513·9 | | |
| | | | 42 | 514·6 | 43 | 812·9 |
| | 45 | 18·48 | 47 | 523·5 | 48 | 812·8 |
| | 50 | 19·21 | 52 | 526·0 | 53 | 814·8 |
| | 55 | 18·81 | 57 | 523·6 | 58 | 819·5 |
| 5 3 | 0 | 17·22 | 2 | 521·0 | 3 | 823·0 |
| | 5 | 16·38 | 7 | 517·2 | 8 | 825·4 |
| | 10 | 15·69 | 12 | 521·7 | 13 | 823·6 |
| | 15 | 15·89 | 17 | 527·0 | 18 | 822·3 |
| | 20 | 16·60 | 22 | 529·4 | 23 | 820·7 |
| | 25 | 17·44 | 27 | 529·6 | 28 | 818·7 |
| | 30 | 18·57 | 32 | 529·3 | 33 | 816·6 |
| | 35 | 18·77 | 37 | 528·2 | 38 | 812·9 |
| | 40 | 18·85 | 42 | 528·0 | 43 | 810·3 |
| | 45 | 19·37 | 47 | 526·8 | 48 | 806·6 |
| | 50 | 19·44 | 52 | 527·2 | 53 | 801·8 |
| | 55 | 19·53 | 57 | 526·5 | 58 | 808·2 |
| 5 4 | 0 | 19·58 | 2 | 527·1 | 3 | 796·6 |
| | 40 | 19·46 | 42 | 521·8 | 43 | 784·7 |
| | 45 | 19·41 | 47 | 523·6 | 48 | 783·4 |
| | 50 | 19·17 | 52 | 522·6 | 53 | 781·7 |
| 5 5 | 0 | 19·22 | 2 | 524·1 | 3 | 777·7 |
| | 50 | 16·79 | 52 | 520·1 | 53 | 784·5 |
| | | | 54 | 516·7 | | |
| | 55 | 15·62 | 57 | 512·3 | 58 | 784·8 |
| 5 6 | 0 | 15·31 | 2 | 509·5 | 3 | 785·9 |
| | 5 | 13·67 | 7 | 511·5 | 8 | 784·4 |
| | 10 | 12·09 | 12 | 520·4 | 13 | 782·3 |
| | 15 | 13·14 | 17 | 523·4 | 18 | 782·8 |
| | 20 | 14·08 | 22 | 523·4 | 23 | 782·2 |
| | 25 | 14·80 | 27 | 521·0 | 28 | 781·0 |
| | 30 | 15·38 | 32 | 521·6 | 33 | 780·1 |
| | 40 | 14·06 | 42 | 519·5 | | |
| | 50 | 12·78 | 52 | 517·1 | | |
| | 55 | 09·22 | 57 | 518·0 | 58 | 778·5 |
| 5 7 | 0 | 04·34 | 2 | 519·9 | 3 | 775·7 |
| | 5 | 01·48 | 7 | 529·1 | 8 | 778·3 |
| | 10 | 03·45 | 12 | 524·7 | 13 | 780·6 |
| | 15 | 03·67 | 17 | 525·2 | 18 | 781·7 |
| | 20 | 05·53 | 22 | 521·9 | 23 | 784·0 |
| | 25 | 05·79 | 27 | 511·2 | 28 | 787·2 |
| | 30 | 05·25 | 32 | 505·4 | 33 | 786·6 |

| Gött. Mean Time. | Declination. | | Bifilar Corrected. | | Balance Corrected. | |
|---|---|---|---|---|---|---|
| d. h. | Min. | ° ′ | Min. | Sc. Div. | Min. | Mic. Div. |
| 5 7 | 35 | 24 58·56 | | | | |
| | 36 | 24 57·58 | 37 | 512·6 | 38 | 783·7 |
| | 39 | 24 55·63 | | | | |
| | 40 | 24 55·15 | 42 | 527·6 | 43 | 777·9 |
| | 41 | 24 54·89 | 44 | 534·5 | | |
| | 45 | 24 56·58 | 46 | 537·4 | | |
| | | | 47 | 538·4 | 48 | 774·0 |
| | 50 | 25 00·24 | 52 | 540·7 | 53 | 770·8 |
| | 55 | 03·47 | 57 | 537·8 | 58 | 767·9 |
| 5 8 | 0 | 05·69 | 2 | 527·9 | 3 | 767·9 |
| | 5 | 05·89 | 7 | 526·4 | 8 | 766·1 |
| | 10 | 07·35 | 12 | 526·8 | 13 | 763·0 |
| | 15 | 08·29 | 17 | 523·7 | 18 | 761·2 |
| | 20 | 10·04 | 22 | 522·7 | 23 | 760·0 |
| | 25 | 13·19 | 27 | 516·5 | 28 | 762·2 |
| | 30 | 11·89 | 32 | 510·3 | 33 | 756·1 |
| | 35 | 07·67 | 37 | 520·4 | 38 | 752·1 |
| | 40 | 05·63 | 42 | 525·2 | 43 | 748·7 |
| | 45 | 02·32 | 47 | 543·1 | 48 | 739·4 |
| | | | 49 | 547·9 | | |
| | 50 | 06·50 | 52 | 546·1 | 53 | 738·0 |
| | 55 | 11·68 | 57 | 536·0 | 58 | 738·7 |
| 5 9 | 0 | 14·84 | 2 | 525·2 | 3 | 738·9 |
| | 5 | 15·47 | 7 | 515·1 | 8 | 739·0 |
| | 10 | 13·67 | 12 | 512·7 | 13 | 740·1 |
| | 15 | 12·20 | 17 | 512·3 | 18 | 738·9 |
| | 20 | 10·72 | 22 | 519·2 | 23 | 736·9 |
| | 25 | 11·00 | 27 | 525·0 | 28 | 733·4 |
| | 31 | 12·06 | 32 | 527·4 | 33 | 729·2 |
| | 35 | 13·22 | 37 | 525·2 | 38 | 727·2 |
| | 40 | 14·80 | 42 | 517·6 | 43 | 727·3 |
| | 45 | 12·95 | 47 | 515·4 | 48 | 726·8 |
| | 50 | 11·42 | 52 | 514·7 | 53 | 725·0 |
| | 55 | 10·68 | 57 | 513·4 | 58 | 721·9 |
| 5 10 | 0 | 09·98 | 2 | 512·1 | 3 | 717·2 |
| | 5 | 09·53 | 7 | 510·9 | 8 | 701·9 |
| | 20 | 12·38 | 22 | 528·4 | 23 | 653·1 |
| | 25 | 14·60 | 27 | 512·3 | 28 | 638·8 |
| | 30 | 14·87 | 32 | 507·1 | 33 | 632·3 |
| | 35 | 14·92 | 37 | 499·4 | 38 | 629·0 |
| | 40 | 16·21 | 42 | 498·6 | 43 | 641·9 |
| | | | 44 | 493·7 | | |
| | 45 | 24·72 | | | | |
| | 46 | 25·70 | 47 | 469·6 | 48 | 615·4 |
| | | | 49 | 458·1 | | |
| | 50 | 26·90 | 51 | 448·1 | | |
| | 54 | 25·14 | 52 | 448·8 | 53 | 575·1 |
| | 55 | 22·45 | 55 | 456·7 | | |
| | | | 56 | 462·4 | 56 | 574·9 |
| | 57 | 18·84 | 57 | 467·3 | | |
| | | | 58 | 472·7 | 58 | 576·1 |
| | 59 | 16·57 | 59 | 475·0 | | |
| 5 11 | 0 | 16·36 | 0 | 474·4 | | |
| | | | 1 | 474·6 | 1 | 568·6 |
| | 2 | 16·72 | 2 | 474·7 | | |
| | | | 3 | 477·1 | 3 | 563·3 |
| | 4 | 15·99 | 4 | 479·2 | | |
| | 5 | 15·54 | 5 | 480·2 | | |
| | | | 6 | 482·8 | 6 | 570·0 |
| | 7 | 14·91 | 7 | 484·6 | | |
| | | | 8 | 485·0 | 8 | 575·0 |

| Gött. Mean Time. | Declination. | |
|---|---|---|
| d. h. | Min. | ° ′ |
| 5 11 | 9 | 25 13·19 |
| | 10 | 11·99 |
| | 15 | 06·81 |
| | 20 | 11·28 |
| | 24 | 14·43 |
| | 25 | 14·77 |
| | 30 | 13·09 |
| | 32 | 12·23 |
| | 35 | 11·68 |
| | 40 | 10·78 |
| | 45 | 09·57 |
| | 50 | 08·93 |
| | 55 | 07·25 |
| 5 12 | 0 | 07·65 |
| | 5 | 06·76 |
| | 10 | 06·34 |
| | 15 | 07·35 |
| | 20 | 07·04 |
| | 25 | 08·34 |
| | 30 | 09·79 |
| | 35 | 13·54 |
| | 40 | 17·96 |
| | 44 | 20·60 |
| | 45 | 21·46 |
| | 50 | 22·11 |
| | 54 | 19·82 |
| | 55 | 19·05 |
| 5 13 | 0 | 16·28 |
| | 5 | 13·44 |
| | 10 | 11·12 |
| | 15 | 10·03 |
| | 20 | 10·27 |
| | 25 | 09·67 |
| | 30 | 09·35 |
| | 35 | 07·02 |
| | 40 | 05·03 |
| | 45 | 03·70 |
| | 50 | 03·21 |
| | 55 | 02·60 |
| 5 14 | 0 | 03·00 |
| | 5 | 03·87 |
| | 10 | 04·10 |
| | 15 | 04·04 |
| | 20 | 04·28 |
| | 25 | 04·82 |
| | 30 | 05·99 |
| | 35 | 07·55 |
| | 40 | 08·97 |
| | 45 | 09·59 |
| | 50 | 11·00 |
| | 55 | 12·28 |
| 5 15 | 0 | 13·37 |
| | 30 | 12·13 |
| | 35 | 11·10 |
| | 40 | 11·79 |
| | 45 | 12·62 |
| | 55 | 13·22 |
| 5 16 | 0 | 13·02 |

BIFILAR. $k$=0·000140. BALANCE. $k$=0·0000085.

| Bifilar Corrected. | | Balance Corrected. | | Gött. Mean Time. | Declination. | | Bifilar Corrected. | | Balance Corrected. | | Gött. Mean Time. | Declination. | | Bifilar Corrected. | | Balance Corrected. | |
|---|---|---|---|---|---|---|---|---|---|---|---|---|---|---|---|---|---|
| Min. | Sc. Div. | Min. | Mic. Div. | d. h. | Min. | ° ′ | Min. | Sc. Div. | Min. | Mic. Div. | d. h. | Min. | ° ′ | Min. | Sc. Div. | Min. | Mic. Div. |
| | | | | 5 16 | 10 | 25 15·76 | 12 | 485·4 | 13 | 569·9 | 6 2 | 45 | 25 24·22 | 47 | 507·9 | 48 | 840·3 |
| 12 | 498·4 | 13 | 579·3 | | 15 | 18·81 | 17 | 482·3 | 18 | 568·0 | | 50 | 18·87 | 52 | 509·6 | 53 | 852·2 |
| 16 | 517·0 | | | | 20 | 19·73 | 22 | 495·0 | 23 | 573·4 | | 55 | 19·64 | 57 | 511·8 | 58 | 859·5 |
| 17 | 517·5 | 17 | 586·7 | | 25 | 22·92 | 27 | 492·1 | 28 | 576·1 | 6 3 | 0 | 18·88 | 2 | 513·3 | 3 | 872·8 |
| 19 | 514·2 | 18 | 585·3 | | 30 | 23·11 | 32 | 495·8 | | | | 5 | 18·54 | 7 | 507·5 | 8 | 882·3 |
| 21 | 513·5 | 22 | 586·3 | | 35 | 25·47 | | | | | | 10 | 19·56 | 12 | 510·7 | 13 | 883·9 |
| 22 | 510·0 | 23 | 585·0 | 5 17 | 0 | 26·16 | 2 | 498·7 | 3 | 549·6 | | 15 | 23·66 | 17 | 517·3 | 18 | 885·4 |
| 27 | 500·9 | 28 | 585·7 | | 5 | 24·70 | 7 | 504·9 | 8 | 557·5 | | 20 | 24·93 | 22 | 518·1 | 23 | 885·3 |
| 29 | 502·3 | 30 | 588·3 | | 10 | 23·52 | 12 | 514·9 | 13 | 560·0 | | 25 | 25·22 | 27 | 521·2 | 28 | 883·7 |
| 32 | 500·3 | 33 | 586·8 | | 15 | 23·07 | 17 | 517·4 | 18 | 562·4 | | 30 | 25·04 | 32 | 528·7 | 33 | 880·7 |
| 34 | 497·7 | | | | 20 | 22·80 | 22 | 514·8 | 23 | 566·1 | | 35 | 26·87 | 37 | 531·6 | 38 | 875·2 |
| 37 | 497·5 | 38 | 591·0 | | 25 | 21·46 | 27 | 510·6 | 28 | 567·4 | | 40 | 29·44 | 42 | 521·5 | 43 | 875·5 |
| 42 | 495·5 | 43 | 584·8 | | 30 | 19·76 | 32 | 508·9 | 33 | 569·2 | | 45 | 27·29 | 47 | 508·5 | 48 | 873·7 |
| 47 | 503·0 | 48 | 586·1 | 5 18 | 0 | 13·43 | 2 | 520·8 | 3 | 606·2 | | 50 | 23·54 | 52 | 514·1 | 53 | 864·2 |
| 52 | 510·5 | 53 | 592·2 | | 5 | 13·61 | 7 | 523·7 | 8 | 614·9 | | 55 | 23·99 | 57 | 523·9 | 58 | 853·2 |
| 57 | 515·3 | 58 | 604·4 | | 10 | 14·73 | 12 | 518·9 | 13 | 622·0 | 6 4 | 0 | 25·41 | 2 | 530·6 | 3 | 846·3 |
| 2 | 517·0 | 3 | 608·8 | | 15 | 13·84 | 17 | 520·0 | 18 | 629·3 | | 5 | 26·72 | 7 | 528·9 | 8 | 842·8 |
| 7 | 515·1 | 8 | 609·8 | | 25 | 14·64 | 27 | 520·6 | 28 | 639·9 | | 10 | 26·27 | 12 | 529·2 | 13 | 841·6 |
| 12 | 513·7 | 13 | 612·3 | 5 19 | 0 | 16·80 | 2 | 517·9 | 3 | 678·9 | | 15 | 25·78 | 17 | 526·6 | 18 | 841·6 |
| 17 | 508·7 | 18 | 616·2 | | | | | | | | | 20 | 24·70 | 22 | 528·5 | 23 | 842·9 |
| 22 | 509·4 | 23 | 615·5 | 5 23 | 0 | 25 16·38 | 2 | 516·2 | 3 | 709·8 | | 25 | 25·22 | 27 | 526·5 | 28 | 844·1 |
| 27 | 508·9 | 28 | 617·3 | | 10 | 20·89 | 12 | 500·9 | 13 | 741·4 | | 30 | 23·31 | 32 | 517·0 | 33 | 843·4 |
| 32 | 507·5 | 33 | 617·2 | | 25 | 21·32 | 27 | 502·5 | 28 | 739·5 | | 35 | 23·25 | 37 | 519·3 | 38 | 844·3 |
| 37 | 518·1 | 38 | 622·0 | | 40 | 22·64 | 42 | 495·3 | 43 | 744·5 | | 40 | 24·22 | 42 | 498·2 | 43 | 852·5 |
| 41 | 517·6 | | | | 45 | 22·44 | 47 | 493·1 | 48 | 744·5 | | | | 44 | 494·5 | | |
| 42 | 517·4 | 43 | 614·8 | | 50 | 23·25 | 52 | 493·9 | | | | 45 | 19·51 | 47 | 498·9 | 48 | 856·4 |
| 46 | 512·9 | 48 | 606·8 | | 55 | 22·96 | 57 | 495·6 | | | | 49 | 13·50 | | | | |
| 52 | 498·1 | 53 | 594·8 | 6 0 | 0 | 23·78 | 2 | 497·9 | 3 | 745·0 | | 50 | 12·23 | 51 | 510·6 | | |
| 56 | 495·4 | | | | 10 | 24·86 | 12 | 503·5 | 13 | 746·2 | | 51 | 11·44 | 52 | 515·4 | 53 | 853·1 |
| 57 | 495·6 | 58 | 583·8 | | 15 | 24·64 | 17 | 501·9 | 18 | 749·0 | | 53 | 11·28 | 54 | 519·9 | | |
| 2 | 499·2 | 3 | 581·0 | | 20 | 24·96 | 22 | 497·1 | 23 | 750·3 | | 55 | 09·98 | 55 | 518·6 | | |
| 7 | 501·5 | 8 | 579·8 | | 25 | 24·60 | 27 | 500·0 | 28 | 752·2 | | 56 | 09·91 | | | 56 | 851·7 |
| 12 | 505·1 | 13 | 580·8 | | 30 | 27·17 | 32 | 488·8 | 33 | 761·4 | | 57 | 10·03 | 57 | 524·0 | | |
| 17 | 507·2 | 18 | 584·4 | | | | 34 | 491·2 | | | | 58 | 09·98 | | | 58 | 857·3 |
| 22 | 506·2 | 23 | 584·7 | | 35 | 24·97 | 37 | 497·5 | 38 | 761·7 | | | | 59 | 529·3 | | |
| 27 | 507·2 | 28 | 587·4 | | 40 | 23·63 | 42 | 498·6 | 43 | 763·1 | 6 5 | 0 | 10·67 | 2 | 530·5 | 3 | 848·3 |
| 32 | 505·7 | 33 | 588·1 | | 45 | 24·52 | 47 | 515·2 | 48 | 765·1 | | 5 | 11·77 | 7 | 528·7 | 8 | 844·3 |
| 37 | 501·6 | 38 | 583·5 | | 50 | 24·87 | 52 | 512·2 | 53 | 766·8 | | 10 | 12·85 | 12 | 528·0 | 13 | 850·9 |
| 42 | 503·9 | 43 | 579·4 | | 55 | 24·77 | 57 | 508·9 | 58 | 769·4 | | 15 | 13·67 | 17 | 525·3 | 18 | 839·7 |
| 47 | 499·0 | 48 | 575·7 | 6 1 | 0 | 23·99 | 2 | 507·9 | 3 | 771·0 | | 20 | 14·96 | 22 | 523·1 | 23 | 837·2 |
| 52 | 498·4 | | | | 5 | 22·78 | 7 | 506·7 | 8 | 772·0 | | 25 | 16·77 | 27 | 516·5 | 28 | 832·8 |
| 57 | 496·0 | 58 | 571·4 | | 10 | 23·16 | 12 | 509·9 | 13 | 769·6 | | 30 | 17·61 | 32 | 514·5 | 33 | 825·8 |
| 2 | 497·1 | 3 | 571·6 | | 15 | 22·53 | 17 | 514·9 | 18 | 768·7 | | 35 | 18·35 | 37 | 513·5 | 38 | 820·5 |
| 7 | 497·5 | 8 | 572·2 | | 20 | 23·34 | 22 | 521·3 | 23 | 769·4 | | 40 | 19·04 | 42 | 513·6 | 43 | 814·5 |
| 12 | 485·7 | | | | 25 | 25·46 | 27 | 520·9 | 28 | 771·3 | | 50 | 19·78 | 52 | 514·7 | 53 | 811·7 |
| 17 | 497·3 | 18 | 568·4 | | 30 | 26·27 | | | | | 6 6 | 0 | 20·94 | 2 | 515·2 | 3 | 804·6 |
| 22 | 500·3 | | | | 31 | 26·52 | 32 | 515·3 | 33 | 774·9 | | 15 | 21·56 | 17 | 518·4 | 18 | 800·4 |
| 27 | 503·6 | 28 | 570·0 | | 35 | 25·61 | 37 | 510·5 | 38 | 776·2 | | 40 | 20·58 | 42 | 517·7 | 43 | 792·2 |
| 32 | 508·6 | | | | 40 | 25·29 | 42 | 512·6 | 43 | 775·9 | 6 7 | 0 | 19·35 | 2 | 517·3 | 3 | 787·9 |
| 37 | 510·0 | 38 | 573·4 | | 45 | 25·22 | 47 | 515·9 | 48 | 774·7 | | 10 | 16·75 | 12 | 513·2 | 13 | 785·6 |
| 42 | 510·6 | | | | 50 | 25·19 | 52 | 519·4 | 53 | 775·1 | | 20 | 17·29 | 22 | 518·5 | 23 | 783·1 |
| 47 | 512·9 | 48 | 575·5 | | 55 | 26·16 | 57 | 522·2 | 58 | 775·7 | 6 8 | 0 | 18·00 | 2 | 514·7 | 3 | 762·6 |
| 52 | 510·0 | | | 6 2 | 0 | 27·07 | 2 | 523·3 | 3 | 775·5 | 6 9 | 0 | 15·71 | 2 | 519·0 | 3 | 759·1 |
| 57 | 505·4 | 58 | 578·1 | | 5 | 28·92 | 7 | 525·0 | 8 | 775·4 | | 15 | 12·42 | 17 | 526·4 | 18 | 752·7 |
| 2 | 502·9 | 3 | 581·3 | | 10 | 30·44 | 12 | 522·1 | 13 | 779·1 | | 20 | 11·88 | 22 | 529·9 | 23 | 750·3 |
| 32 | 498·2 | 33 | 584·5 | | 15 | 31·72 | 17 | 518·0 | 18 | 784·6 | | 25 | 13·29 | 27 | 527·7 | 28 | 749·0 |
| 37 | 496·5 | | | | 20 | 30·91 | 22 | 521·0 | 23 | 789·8 | | 30 | 14·62 | 32 | 525·6 | | |
| 42 | 491·2 | 43 | 588·2 | | 25 | 28·02 | 27 | 527·4 | 28 | 793·9 | 6 10 | 0 | 17·10 | 2 | 519·5 | 3 | 743·1 |
| 47 | 491·4 | | | | 30 | 26·58 | 32 | 527·8 | 33 | 801·0 | 6 11 | 0 | 16·19 | 2 | 520·8 | 3 | 743·4 |
| 57 | 487·7 | 58 | 583·4 | | 35 | 23·78 | 37 | 520·9 | 38 | 813·4 | | 10 | 15·45 | 12 | 521·0 | 13 | 741·1 |
| 2 | 484·5 | 3 | 579·9 | | 40 | 22·65 | 42 | 520·8 | 43 | 825·0 | | 15 | 14·57 | 17 | 521·1 | 18 | 738·8 |

BIFILAR. $k$=0·000140. BALANCE. $k$=0·0000085.

| Gött. Mean Time. | Declination. | | Bifilar Corrected. | | Balance Corrected. | |
|---|---|---|---|---|---|---|
| d. h. | Min. | ° ′ | Min. | Sc. Div. | Min. | Mic. Div. |
| 6 11 | 20 | 25 13·20 | 22 | 518·2 | 23 | 739·2 |
| | 25 | 10·90 | 27 | 518·0 | 28 | 737·7 |
| | 30 | 09·44 | 32 | 522·1 | 33 | 735·8 |
| | 35 | 10·25 | 37 | 522·1 | 38 | 736·1 |
| | 40 | 10·11 | 42 | 520·7 | 43 | 735·3 |
| | 45 | 10·04 | 47 | 518·7 | 48 | 735·5 |
| | 50 | 10·00 | 52 | 513·3 | 53 | 736·2 |
| | 55 | 08·82 | 57 | 511·1 | 58 | 737·9 |
| 6 12 | 0 | 08·80 | 2 | 511·3 | 3 | 738·7 |
| | 5 | 10·01 | 7 | 511·0 | 8 | 739·2 |
| | 10 | 11·42 | 12 | 510·2 | 13 | 740·7 |
| | 25 | 15·99 | 27 | 518·6 | 28 | 740·7 |
| | 30 | 17·49 | 32 | 518·1 | 33 | 737·9 |
| | 35 | 16·86 | 37 | 521·5 | 38 | 732·3 |
| | 40 | 15·59 | 42 | 526·0 | 43 | 724·8 |
| | 45 | 15·67 | 47 | 526·0 | 48 | 717·7 |
| | 50 | 14·75 | 52 | 523·8 | 53 | 711·6 |
| | 55 | 13·16 | 57 | 523·7 | 58 | 706·2 |
| 6 13 | 0 | 12·06 | 2 | 523·4 | 3 | 701·5 |
| | 5 | 11·89 | 7 | 520·4 | 8 | 699·9 |
| | 10 | 11·24 | 12 | 519·3 | 13 | 700·3 |
| | 15 | 10·77 | 17 | 518·2 | 18 | 701·1 |
| | 20 | 10·23 | 22 | 515·4 | 23 | 702·4 |
| | 25 | 09·89 | 27 | 513·9 | 28 | 701·5 |
| | 30 | 09·08 | 32 | 516·3 | 33 | 704·4 |
| | 35 | 11·02 | 37 | 515·6 | 38 | 707·1 |
| | 40 | 11·96 | | | | |
| | 50 | 13·12 | 52 | 514·2 | 53 | 713·6 |
| | 55 | 14·13 | 57 | 514·0 | 58 | 718·1 |
| 6 14 | 0 | 14·87 | 2 | 513·8 | 3 | 721·8 |
| | 5 | 15·97 | 7 | 515·2 | 8 | 723·5 |
| | 10 | 16·75 | 12 | 514·8 | 13 | 724·8 |
| | 15 | 17·49 | | | | |
| 6 15 | 0 | 19·10 | 2 | 517·5 | 3 | 733·3 |
| | 30 | 18·94 | 32 | 518·2 | 33 | 732·3 |
| 6 16 | 0 | 17·12 | 2 | 513·0 | 3 | 717·0 |
| | 5 | 17·54 | 7 | 512·9 | 8 | 717·5 |
| | 10 | 17·50 | 12 | 512·9 | | |
| 6 17 | 0 | 27·79 | 2 | 485·1 | 3 | 620·0 |
| | 5 | 27·14 | 7 | 485·2 | 8 | 600·2 |
| | 10 | 26·14 | 12 | 489·6 | 13 | 587·7 |
| | 15 | 25·91 | 17 | 495·1 | 18 | 582·4 |
| | 20 | 26·07 | 21 | 498·3 | | |
| | | | 22 | 497·6 | 23 | 582·4 |
| | 25 | 25·61 | 27 | 495·6 | 28 | 581·0 |
| | 30 | 23·48 | 32 | 495·1 | 33 | 580·7 |
| | 35 | 22·28 | 37 | 496·0 | 38 | 588·2 |
| | 40 | 21·88 | 42 | 499·4 | 43 | 597·3 |
| | 45 | 22·06 | 47 | 502·1 | 48 | 607·6 |
| | 50 | 23·93 | 52 | 502·4 | 53 | 612·4 |
| | 55 | 26·48 | 57 | 500·4 | 58 | 614·1 |
| 6 18 | 0 | 28·40 | 2 | 498·3 | 3 | 611·4 |
| | 5 | 29·14 | 7 | 499·6 | 8 | 606·5 |
| | 10 | 28·35 | 12 | 500·3 | 13 | 604·3 |
| | 15 | 29·19 | 17 | 504·3 | 18 | 604·3 |
| | 20 | 29·61 | 22 | 506·9 | 23 | 603·8 |
| | 25 | 32·26 | | | | |
| | 26 | 32·66 | 27 | 506·9 | 28 | 606·0 |
| | 29 | 33·75 | | | | |
| | 30 | 34·21 | 32 | 502·1 | 33 | 605·6 |
| | 35 | 33·63 | | | | |

| Gött. Mean Time. | Declination. | | Bifilar Corrected. | | Balance Corrected. | |
|---|---|---|---|---|---|---|
| d. h. | Min. | ° ′ | Min. | Sc. Div. | Min. | Mic. Div. |
| 6 18 | 36 | 25 33·68 | 37 | 503·8 | 38 | 601·1 |
| | 40 | 32·49 | 42 | 505·8 | 43 | 597·9 |
| | 45 | 30·54 | 47 | 511·1 | 48 | 596·4 |
| | 50 | 29·31 | 52 | 511·2 | 53 | 597·0 |
| | 55 | 26·74 | 57 | 510·9 | 58 | 596·3 |
| 6 19 | 0 | 25·14 | 2 | 516·5 | 3 | 601·0 |
| | 5 | 23·81 | 7 | 517·3 | 8 | 604·4 |
| | 10 | 22·31 | 12 | 519·9 | 13 | 609·3 |
| | 15 | 21·76 | 17 | 518·0 | 18 | 614·8 |
| | 20 | 22·89 | 22 | 513·3 | 23 | 623·6 |
| | 25 | 21·34 | 27 | 509·0 | 28 | 628·8 |
| | 30 | 20·36 | 32 | 524·5 | 33 | 632·6 |
| | 35 | 22·85 | 37 | 518·2 | 38 | 639·4 |
| | 40 | 21·34 | 42 | 518·3 | 43 | 646·2 |
| | 45 | 20·15 | 47 | 518·4 | 48 | 652·2 |
| | 50 | 19·49 | 52 | 511·9 | 53 | 662·3 |
| | 55 | 18·41 | 57 | 518·4 | 58 | 663·9 |
| 6 20 | 0 | 17·74 | 2 | 519·9 | 3 | 668·7 |
| | 5 | 18·81 | 7 | 515·5 | 8 | 677·1 |
| | 10 | 17·27 | 12 | 512·0 | 13 | 683·2 |
| | 15 | 17·89 | 17 | 510·9 | 18 | 688·6 |
| | 20 | 18·03 | 22 | 510·8 | 23 | 692·7 |
| | 30 | 18·25 | 32 | 515·2 | 33 | 695·3 |
| | 35 | 18·16 | 37 | 515·7 | 38 | 697·7 |
| | 40 | 18·25 | 42 | 514·6 | 43 | 699·7 |
| | 50 | 16·84 | 52 | 515·3 | 53 | 703·8 |
| | 55 | 16·92 | 57 | 516·2 | 58 | 705·0 |
| 6 21 | 0 | 16·75 | 2 | 513·9 | 3 | 707·5 |
| | 10 | 15·47 | 12 | 511·9 | 13 | 713·6 |
| | 25 | 19·17 | 27 | 507·9 | 28 | 725·0 |
| | 30 | 19·55 | 32 | 507·0 | 33 | 725·3 |
| 6 22 | 0 | 18·20 | 2 | 507·3 | 3 | 729·0 |
| | 20 | 17·51 | 22 | 509·9 | 23 | 732·4 |
| | 30 | 20·03 | 32 | 509·8 | 33 | 736·5 |
| 6 23 | 0 | 19·55 | 2 | 504·6 | 3 | 742·4 |
| | 25 | 17·60 | 27 | 511·8 | 28 | 745·9 |
| | 40 | 21·48 | 42 | 511·5 | 43 | 751·3 |
| | 45 | 22·33 | 47 | 506·9 | 48 | 751·5 |
| | 50 | 21·21 | 52 | 512·3 | 53 | 750·6 |
| | 55 | 20·53 | 57 | 511·0 | | |
| 7 0 | 0 | 20·96 | 2 | 508·4 | 3 | 750·0 |
| | 5 | 21·43 | 7 | 509·2 | 8 | 749·3 |
| | 10 | 21·83 | 12 | 512·3 | | |
| | 15 | 21·41 | 17 | 513·8 | 18 | 748·6 |
| | 20 | 21·63 | 22 | 509·5 | | |
| | 25 | 20·85 | 27 | 512·2 | 28 | 749·6 |
| 7 1 | 0 | 21·03 | 2 | 514·9 | 3 | 745·2 |
| | 25 | 23·45 | 27 | 519·6 | 28 | 747·9 |
| 7 2 | 0 | 25·19 | 2 | 509·9 | 3 | 762·8 |
| 7 3 | 0 | 18·47 | 2 | 528·2 | 3 | 813·1 |
| | 5 | 17·07 | 7 | 528·6 | 8 | 817·5 |
| | 10 | 19·12 | 12 | 529·3 | 13 | 820·3 |
| | 15 | 20·11 | 17 | 531·5 | 18 | 822·6 |
| | 20 | 21·39 | 22 | 532·6 | | |
| | 25 | 22·03 | 27 | 529·1 | 28 | 825·3 |
| | 30 | 20·62 | 32 | 524·5 | | |
| | 35 | 21·06 | 37 | 528·4 | 38 | 826·2 |
| | 40 | 21·12 | 42 | 525·7 | | |
| | 45 | 21·32 | 47 | 531·1 | 48 | 830·9 |
| | 50 | 22·40 | 52 | 527·4 | 53 | 837·7 |
| | 55 | 21·23 | 57 | 512·4 | 58 | 848·1 |

| Gött. Mean Time. | Declination. | |
|---|---|---|
| d. h. | Min. | ° ′ |
| 7 4 | 0 | 25 16·28 |
| | 5 | 13·99 |
| | 10 | 10·95 |
| | 15 | 10·33 |
| | 20 | 13·59 |
| | 25 | 15·47 |
| | 30 | 17·06 |
| | 35 | 18·90 |
| | 40 | 20·43 |
| | 45 | 20·67 |
| | 50 | 17·68 |
| | 55 | 17·20 |
| 7 5 | 0 | 18·77 |
| | 5 | 19·48 |
| | 10 | 20·89 |
| | 15 | 21·50 |
| | 20 | 20·76 |
| | 25 | 17·37 |
| | 30 | 14·23 |
| | 35 | 05·83 |
| | 37 | 25 01·76 |
| | 40 | 24 59·07 |
| | 42 | 24 58·25 |
| | 44 | 24 59·79 |
| | 45 | 25 01·90 |
| | 47 | 05·89 |
| | 50 | 12·09 |
| | 55 | 03·84 |
| | 57 | 00·84 |
| 7 6 | 0 | 01·11 |
| | 4 | 04·24 |
| | 5 | 05·38 |
| | 7 | 05·63 |
| | 9 | 05·03 |
| | 10 | 04·95 |
| | 15 | 07·00 |
| | 19 | 02·32 |
| | 20 | 01·59 |

BIFILAR. $k$=0·000140. BALANCE. $k$=0·0000085.

March 7d 5h 30m—40m. The declination magnet vibrating 3′ – 5′.

| Bifilar Corrected. | | Balance Corrected. | | Gött. Mean Time. | Declination. | | Bifilar Corrected. | | Balance Corrected. | | Gött. Mean Time. | Declination. | | Bifilar Corrected. | | Balance Corrected. | |
|---|---|---|---|---|---|---|---|---|---|---|---|---|---|---|---|---|---|
| Min. | Sc. Div. | Min. | Mic. Div. | d. h. | Min. | ° ′ | Min. | Sc. Div. | Min. | Mic. Div. | d. h. | Min. | ° ′ | Min. | Sc. Div. | Min. | Mic. Div. |
| 2 | 521·1 | 3 | 850·8 | 7 6 | 25 | 25 05·90 | 25 | 519·4 | | | 7 10 | 10 | 25 15·38 | 12 | 507·2 | 13 | 739·5 |
| 7 | 529·1 | 8 | 855·2 | | | | 27 | 520·7 | | | | 15 | 12·51 | 17 | 516·1 | 18 | 736·2 |
| 12 | 530·8 | 13 | 858·4 | | | | 28 | 522·2 | 28 | 835·7 | | | | 19 | 533·8 | | |
| 17 | 540·0 | 18 | 859·3 | | 30 | 24 57·98 | 32 | 523·9 | 33 | 834·9 | | 20 | 09·12 | | | | |
| 22 | 532·5 | | | | 35 | 24 59·84 | 37 | 522·2 | 38 | 838·0 | | 21 | 11·41 | 22 | 547·8 | 23 | 713·7 |
| 27 | 522·9 | 28 | 855·4 | | 40 | 25 00·96 | 42 | 516·5 | 43 | 839·3 | | | | 24 | 539·6 | | |
| 32 | 516·4 | | | | 45 | 03·34 | 47 | 512·6 | 48 | 840·3 | | 25 | 20·58 | | | | |
| 37 | 517·0 | 38 | 851·9 | | 50 | 04·81 | 52 | 511·4 | 53 | 839·5 | | 26 | 21·21 | 27 | 527·2 | 28 | 698·9 |
| 42 | 513·8 | 43 | 849·1 | | 55 | 06·48 | 57 | 513·2 | | | | | | 29 | 527·4 | | |
| 47 | 506·6 | 48 | 849·4 | 7 7 | 0 | 09·51 | 2 | 508·0 | 3 | 844·0 | | 30 | 24·82 | | | | |
| 52 | 517·1 | 53 | 847·4 | | 5 | 07·81 | 7 | 508·7 | 8 | 841·5 | | 31 | 26·00 | 32 | 518·8 | 33 | 683·7 |
| 57 | 531·6 | 58 | 844·7 | | 10 | 06·43 | 12 | 508·4 | 13 | 840·6 | | | | 34 | 513·6 | | |
| 2 | 529·5 | 3 | 846·7 | | 15 | 05·09 | 17 | 516·7 | 18 | 834·7 | | 35 | 26·97 | | | | |
| 7 | 527·9 | 8 | 846·9 | | 20 | 07·18 | 22 | 515·7 | 23 | 832·1 | | 36 | 26·68 | 37 | 508·9 | 38 | 669·9 |
| 12 | 527·8 | 13 | 848·2 | | 25 | 08·19 | 27 | 516·5 | 28 | 828·4 | | | | 39 | 506·5 | | |
| 17 | 529·5 | 18 | 852·4 | | 30 | 09·39 | 32 | 519·1 | 33 | 824·9 | | 40 | 26·13 | | | | |
| 22 | 514·0 | 23 | 860·7 | | 35 | 12·06 | 37 | 508·7 | 38 | 828·2 | | 41 | 27·22 | 42 | 509·3 | 43 | 654·1 |
| 27 | 520·3 | 28 | 867·2 | | 40 | 12·35 | 42 | 506·4 | 43 | 828·5 | | | | 44 | 500·8 | | |
| 32 | 518·8 | 33 | 879·0 | | 45 | 13·77 | 47 | 504·4 | 48 | 833·2 | | 45 | 24·22 | | | | |
| | | | | | 50 | 12·89 | 52 | 505·0 | 53 | 835·0 | | 46 | 20·77 | 47 | 506·6 | 48 | 637·7 |
| 37 | 531·8 | 38 | 875·0 | | 55 | 14·46 | 57 | 506·5 | 58 | 835·5 | | | | 49 | 520·0 | | |
| 40 | 546·8 | | | 7 8 | 0 | 14·85 | 2 | 507·6 | 3 | 834·6 | | 50 | 19·91 | | | | |
| 42 | 558·7 | 43 | 864·0 | | 5 | 15·05 | 7 | 512·3 | 8 | 830·7 | | 51 | 21·01 | 52 | 518·9 | 53 | 616·9 |
| 44 | 570·4 | | | * | 25 | 15·54 | 27 | 510·7 | 28 | 822·4 | | | | 54 | 515·9 | | |
| 45 | 574·3 | | | | 30 | 14·77 | 32 | 509·6 | 33 | 818·9 | | 55 | 22·15 | | | | |
| 46 | 573·2 | 46 | 856·4 | | 35 | 12·38 | 37 | 517·6 | 38 | 807·4 | | 56 | 22·28 | 57 | 516·2 | 58 | 606·0 |
| 47 | 572·0 | | | | | | 39 | 526·1 | | | | | | 59 | 517·8 | | |
| 48 | 569·3 | 48 | 856·4 | | 40 | 12·58 | 42 | 526·6 | 43 | 787·1 | 7 11 | 0 | 22·31 | 2 | 514·7 | 3 | 601·1 |
| 49 | 563·2 | | | | 44 | 16·72 | | | | | | 5 | 22·87 | 7 | 513·5 | 8 | 602·5 |
| 50 | 553·7 | | | | 45 | 18·72 | 47 | 524·1 | 48 | 779·3 | | 10 | 24·22 | 12 | 504·7 | 13 | 599·4 |
| 51 | 542·6 | | | | 49 | 27·07 | 49 | 512·7 | | | | 15 | 24·96 | 17 | 498·8 | 18 | 590·8 |
| 52 | 534·0 | | | | 50 | 26·90 | 50 | 507·3 | | | | | | 19 | 500·2 | | |
| 53 | 526·9 | 53 | 868·9 | | | | 51 | 504·0 | 51 | 770·6 | | 20 | 24·73 | 22 | 502·2 | 23 | 590·9 |
| 54 | 521·3 | | | | 52 | 26·92 | 52 | 506·4 | | | | | | 24 | 496·0 | | |
| 55 | 521·6 | | | | | | 53 | 511·1 | 53 | 758·5 | | 25 | 25·04 | 27 | 489·5 | 28 | 585·6 |
| 56 | 528·1 | 56 | 862·1 | | 54 | 25·88 | 54 | 511·6 | | | | 30 | 21·93 | 32 | 487·7 | 33 | 580·9 |
| 57 | 538·7 | | | | 55 | 24·99 | 55 | 514·4 | | | | 35 | 16·75 | 37 | 494·1 | 38 | 575·3 |
| 58 | 547·2 | 58 | 853·6 | | | | 56 | 514·1 | 56 | 736·1 | | | | 39 | 506·0 | | |
| 59 | 550·4 | | | | 57 | 24·23 | 57 | 511·9 | | | | 40 | 13·52 | 42 | 515·9 | 43 | 585·0 |
| 0 | 552·3 | | | | | | 58 | 510·4 | 58 | 724·5 | | | | 44 | 516·1 | | |
| 1 | 556·5 | | | | 59 | 22·94 | 59 | 508·7 | | | | 45 | 11·39 | 47 | 516·3 | 48 | 590·5 |
| 2 | 559·2 | | | 7 9 | 0 | 21·95 | 0 | 507·8 | | | | | | 49 | 524·7 | | |
| 3 | 559·5 | 3 | 841·2 | | | | 1 | 506·4 | 1 | 712·6 | | 50 | 10·21 | 52 | 520·7 | 53 | 594·6 |
| 4 | 559·1 | | | | 2 | 20·13 | 2 | 508·0 | 3 | 710·3 | | | | 54 | 518·0 | | |
| 5 | 556·8 | | | | | | 4 | 509·1 | | | | 55 | 08·95 | 57 | 515·5 | 58 | 598·5 |
| 6 | 553·0 | 6 | 840·2 | | 5 | 17·00 | 5 | 510·2 | | | 7 12 | 0 | 06·21 | 2 | 519·6 | 3 | 605·7 |
| 7 | 548·2 | | | | | | 6 | 511·3 | 6 | 714·2 | | 5 | 02·23 | 7 | 528·0 | 8 | 609·4 |
| 8 | 546·7 | 8 | 840·3 | | 7 | 15·98 | 7 | 510·1 | | | | | | 9 | 531·4 | | |
| 9 | 546·0 | | | | | | 8 | 510·1 | 8 | 717·0 | | 10 | 01·07 | 12 | 527·9 | 13 | 609·0 |
| 10 | 546·1 | | | | | | 9 | 510·2 | | | | 15 | 01·18 | 17 | 527·2 | 18 | 611·1 |
| 11 | 547·7 | 11 | 838·0 | | 10 | 13·19 | 12 | 515·9 | 13 | 734·2 | | 20 | 03·41 | 22 | 521·5 | 23 | 618·1 |
| 12 | 548·5 | | | | | | 14 | 520·4 | | | | 25 | 05·62 | 27 | 513·3 | 28 | 625·8 |
| 13 | 545·1 | 13 | 836·5 | | 15 | 09·27 | 17 | 522·8 | 18 | 739·5 | | 30 | 06·43 | 32 | 506·5 | 33 | 633·4 |
| 14 | 540·4 | | | | 20 | 10·75 | 22 | 517·9 | 23 | 746·7 | | 35 | 06·12 | 37 | 506·0 | 38 | 637·2 |
| 15 | 535·7 | | | | 25 | 09·54 | 27 | 516·4 | 28 | 756·5 | | 40 | 06·12 | 42 | 503·7 | 43 | 642·5 |
| 17 | 526·4 | 17 | 839·8 | | 30 | 07·27 | 32 | 516·8 | 33 | 761·7 | | 45 | 06·01 | 47 | 507·4 | 48 | 646·9 |
| 18 | 525·1 | 18 | 838·4 | | 35 | 06·77 | 37 | 517·6 | 38 | 765·3 | | 50 | 06·81 | 52 | 504·4 | 53 | 647·9 |
| 19 | 525·4 | | | | | | 52 | 515·4 | 53 | 751·6 | | | | 54 | 502·5 | | |
| 20 | 526·2 | | | | 55 | 13·27 | 57 | 518·2 | 58 | 744·4 | | 55 | 06·66 | 57 | 498·3 | 59 | 648·6 |
| 22 | 521·6 | | | 7 10 | 0 | 15·07 | 2 | 514·7 | 3 | 740·7 | 7 13 | 0 | 07·35 | 2 | 496·2 | 3 | 649·4 |
| 23 | 519·8 | 23 | 836·0 | | 5 | 15·91 | 7 | 508·1 | 8 | 740·0 | | 5 | 08·72 | 7 | 497·4 | 8 | 656·5 |

BIFILAR. $k=0{\cdot}000140$. BALANCE. $k=0{\cdot}0000085$.

March $7^d$ $8^h$ $35^m$—$50^m$. The declination magnet vibrating 3′, and the bifilar 10—20 divisions. $10^h$ $21^m$. Declination magnet vibrating 5′, and bifilar 8—10 divisions. $10^h$ $46^m$. Declination magnet 3′, and bifilar 11 divisions.

* See notes on the Aurora Borealis, *after* the *Extra Observations of Magnetometers*.

| Gött. Mean Time. | Declination. | | Bifilar Corrected. | | Balance Corrected. | |
|---|---|---|---|---|---|---|
| d. h. | Min. | ° ′ | Min. | Sc. Div. | Min. | Mic. Div. |
| 7 13 | 10 | 25 10·23 | 12 | 488·5 | 13 | 655·7 |
| | | | 14 | 487·5 | | |
| | 15 | 11·35 | 17 | 487·4 | 18 | 655·7 |
| | 20 | 12·58 | 22 | 487·7 | 23 | 652·4 |
| | 25 | 14·03 | 27 | 485·9 | 28 | 651·6 |
| | | | 29 | 485·6 | | |
| | 30 | 16·05 | 32 | 489·9 | 33 | 652·1 |
| | | | 34 | 490·0 | | |
| | 35 | 17·24 | 37 | 493·3 | 38 | 653·2 |
| | 40 | 18·50 | 42 | 498·1 | 43 | 653·0 |
| | 45 | 18·21 | 47 | 507·4 | 48 | 654·5 |
| | 50 | 18·87 | 52 | 517·1 | 53 | 654·7 |
| | 55 | 19·46 | 57 | 508·2 | 58 | 655·6 |
| 7 14 | 0 | 18·68 | 2 | 512·3 | 3 | 660·2 |
| | 31 | 20·09 | 32 | 500·3 | 33 | 655·6 |
| | 35 | 20·15 | 37 | 495·8 | 38 | 650·3 |
| | 40 | 22·44 | 42 | 491·8 | 43 | 638·9 |
| | | | 44 | 483·8 | | |
| | 45 | 23·34 | 47 | 480·0 | 48 | 621·5 |
| | | | 49 | 483·2 | | |
| | 50 | 25·87 | | | | |
| | 51 | 26·58 | 52 | 483·8 | 53 | 610·2 |
| | | | 54 | 483·6 | | |
| | 55 | 30·58 | | | | |
| | 56 | 31·75 | 57 | 485·9 | 58 | 599·6 |
| | | | 59 | 486·2 | | |
| 7 15 | 0 | 32·62 | 2 | 489·7 | 3 | 582·6 |
| | 1 | 32·32 | 4 | 492·2 | | |
| | 5 | 31·05 | 7 | 496·1 | 8 | 553·7 |
| | | | 9 | 495·1 | | |
| | 10 | 31·25 | | | | |
| | 11 | 31·14 | 12 | 492·2 | 13 | 533·9 |
| | | | 14 | 492·5 | | |
| | 15 | 30·44 | | | | |
| | 16 | 29·93 | 17 | 493·5 | 18 | 533·1 |
| | | | 19 | 495·3 | | |
| | 20 | 26·79 | | | | |
| | 21 | 26·11 | 22 | 491·0 | 23 | 537·7 |
| | | | 24 | 492·1 | | |
| | 25 | 22·82 | 27 | 491·0 | 28 | 540·3 |
| | | | 29 | 491·4 | | |
| | 30 | 19·26 | 32 | 492·3 | 33 | 540·9 |
| | | | 34 | 498·2 | | |
| | 35 | 16·95 | 37 | 505·4 | 38 | 544·6 |
| | | | 39 | 500·0 | | |
| | 40 | 15·54 | 42 | 501·1 | 43 | 549·4 |
| | 45 | 17·37 | 47 | 501·4 | 48 | 559·5 |
| | 50 | 18·55 | 52 | 493·2 | 53 | 558·2 |
| | 55 | 17·70 | 57 | 485·7 | 58 | 547·4 |
| | | | 59 | 487·5 | | |
| 7 16 | 0 | 17·60 | 2 | 491·5 | 3 | 547·8 |
| | 5 | 18·84 | 7 | 489·8 | 8 | 558·8 |
| | 10 | 16·60 | 12 | 496·3 | 13 | 575·8 |
| | 15 | 15·94 | 17 | 501·3 | 18 | 590·5 |
| | 20 | 15·44 | 22 | 502·0 | 23 | 602·6 |
| | 25 | 15·17 | 27 | 499·3 | 28 | 609·2 |
| | 40 | 11·68 | 42 | 508·8 | 43 | 618·5 |
| | 45 | 11·42 | 47 | 511·2 | 48 | 623·5 |
| | 50 | 11·62 | 52 | 514·8 | 53 | 622·7 |
| 7 17 | 0 | 11·32 | 2 | 518·6 | 3 | 626·0 |
| | 10 | 09·79 | 12 | 519·2 | 13 | 641·8 |

| Gött. Mean Time. | Declination. | | Bifilar Corrected. | | Balance Corrected. | |
|---|---|---|---|---|---|---|
| d. h. | Min. | ° ′ | Min. | Sc. Div. | Min. | Mic. Div. |
| 7 17 | 15 | 25 10·74 | 17 | 519·1 | 18 | 650·3 |
| | 20 | 12·35 | 22 | 516·3 | 23 | 655·5 |
| | 40 | 18·16 | 42 | 507·2 | 43 | 667·3 |
| 7 18 | 0 | 18·08 | 2 | 503·2 | 3 | 666·0 |
| | 15 | 18·90 | 17 | 499·4 | 18 | 662·6 |
| | 20 | 18·88 | 22 | 500·8 | 23 | 659·5 |
| | 25 | 17·15 | 27 | 505·0 | 28 | 659·6 |
| | 30 | 16·82 | 32 | 508·1 | 33 | 673·9 |
| | | | 42 | 517·1 | 43 | 684·1 |
| | 45 | 19·35 | 47 | 516·8 | 48 | 692·7 |
| | 50 | 21·17 | 52 | 512·7 | 53 | 696·2 |
| | 55 | 21·71 | 57 | 511·6 | 58 | 695·4 |
| 7 19 | 0 | 22·24 | 2 | 517·6 | 3 | 695·6 |
| | 5 | 22·35 | 7 | 519·2 | 8 | 692·8 |
| | 10 | 22·25 | 12 | 523·7 | 13 | 691·2 |
| | 15 | 24·08 | 17 | 520·5 | 18 | 690·0 |
| | 20 | 22·47 | 22 | 519·7 | 23 | 686·0 |
| | 25 | 20·89 | 27 | 518·0 | 28 | 686·2 |
| | 30 | 20·58 | 32 | 518·3 | 33 | 685·4 |
| | 35 | 19·82 | 37 | 520·4 | 38 | 687·8 |
| | 40 | 20·85 | 42 | 518·6 | 43 | 693·9 |
| | 45 | 22·00 | 47 | 514·5 | 48 | 697·7 |
| | 50 | 21·48 | 52 | 515·1 | 53 | 696·2 |
| | 55 | 20·80 | 57 | 520·7 | 58 | 696·3 |
| 7 20 | 0 | 24·59 | 2 | 523·8 | 3 | 699·0 |
| | 5 | 24·15 | 7 | 515·7 | 8 | 700·6 |
| | 10 | 23·39 | | | | |
| | 11 | 22·13 | 12 | 506·8 | 13 | 704·3 |
| | 14 | 21·36 | | | | |
| | 15 | 21·01 | 16 | 506·7 | | |
| | | | 17 | 508·5 | 18 | 705·6 |
| | 19 | 19·91 | | | | |
| | 20 | 19·59 | 22 | 511·4 | 23 | 705·1 |
| | 25 | 19·53 | 27 | 510·7 | 28 | 709·5 |
| | 29 | 21·36 | | | | |
| | 30 | 21·97 | 31 | 506·4 | | |
| | | | 32 | 504·7 | 33 | 716·3 |
| | | | 34 | 501·3 | | |
| | 35 | 21·73 | 37 | 499·2 | 38 | 721·8 |
| | | | 39 | 497·3 | | |
| | 40 | 21·59 | | | | |
| | 41 | 21·06 | 42 | 494·6 | 43 | 724·0 |
| | | | 44 | 493·7 | | |
| | 45 | 20·08 | 47 | 494·0 | 48 | 726·4 |
| | | | 49 | 494·5 | | |
| | 50 | 20·99 | 52 | 496·5 | 53 | 728·2 |
| | 55 | 20·40 | 57 | 497·9 | 58 | 728·1 |
| 7 21 | 0 | 20·72 | 2 | 496·9 | 3 | 731·0 |
| | 5 | 21·66 | 7 | 492·9 | 8 | 738·1 |
| | 10 | 22·37 | 12 | 490·3 | 13 | 747·7 |
| | 15 | 25·02 | 17 | 485·1 | 18 | 755·3 |
| | 20 | 25·53 | 22 | 488·9 | 23 | 757·6 |
| | 25 | 27·41 | 27 | 488·0 | 28 | 755·9 |
| | 30 | 27·58 | 32 | 496·5 | 33 | 753·0 |
| | 35 | 25·47 | 37 | 494·6 | 38 | 749·1 |
| | 40 | 25·24 | 42 | 502·2 | 43 | 744·4 |
| | 45 | 25·31 | | | | |
| | 46 | 24·73 | 47 | 504·4 | 48 | 742·7 |
| | 49 | 25·16 | | | | |
| | 50 | 25·09 | 52 | 501·3 | 53 | 742·9 |
| | 55 | 22·80 | 57 | 506·0 | 58 | 741·1 |

| Gött. Mean Time. | Declination. | |
|---|---|---|
| d. h. | Min. | ° ′ |
| 7 22 | 0 | 25 21·06 |
| | 5 | 19·64 |
| | 10 | 19·21 |
| | 15 | 19·37 |
| | 19 | 20·63 |
| | 20 | 20·62 |
| | 25 | 21·21 |
| | 30 | 19·34 |
| | 35 | 18·99 |
| | 40 | 18·14 |
| | 45 | 17·83 |
| | 50 | 18·82 |
| | 55 | 20·79 |
| 7 23 | 0 | 18·23 |
| | 5 | 20·22 |
| | 10 | 20·45 |
| | 15 | 19·98 |
| | 20 | 20·03 |
| | 25 | 19·78 |
| | 30 | 19·98 |
| | 35 | 19·58 |
| 8 0 | 0 | 20·90 |
| 8 5 | 0 | 25 20·49 |
| | 5 | 19·84 |
| | 10 | 19·53 |
| | 15 | 19·49 |
| | 20 | 19·68 |
| | 25 | 19·96 |
| | 30 | 19·32 |
| | 35 | 19·19 |
| | 40 | 19·73 |
| | 45 | 20·06 |
| | 50 | 18·57 |
| | 55 | 18·47 |
| 8 6 | 0 | 18·27 |
| | 5 | 18·37 |
| | 10 | 18·79 |
| | 15 | 16·10 |
| | 20 | 16·79 |
| | 25 | 16·97 |
| | 30 | 15·56 |
| | 35 | 14·65 |
| | 40 | 13·41 |
| | 45 | 10·75 |
| | 50 | 06·56 |
| | 55 | 05·74 |
| 8 7 | 0 | 05·40 |
| | 5 | 06·07 |
| | 10 | 08·75 |
| | 15 | 10·23 |
| | 20 | 10·28 |
| | 25 | 09·00 |
| | 30 | 06·86 |
| | 35 | 05·35 |
| | 40 | 05·33 |
| | 45 | 07·18 |
| | 50 | 08·18 |
| | 55 | 09·49 |
| 8 8 | 0 | 11·21 |

BIFILAR. $k$=0·000140. BALANCE. $k$=0·0000085.

March 7d 20h 5m. Declination magnet vibrating 3′.
March 8d 6h 20m. Clock 2s fast; set right.

| Bifilar Corrected. | | Balance Corrected. | | Gött. Mean Time. | Declination. | | Bifilar Corrected. | | Balance Corrected. | | Gött. Mean Time. | Declination. | | Bifilar Corrected. | | Balance Corrected. | |
|---|---|---|---|---|---|---|---|---|---|---|---|---|---|---|---|---|---|
| Min. | Sc. Div. | Min. | Mic. Div. | d. h. | Min. | ° ′ | Min. | Sc. Div. | Min. | Mic. Div. | d. h. | Min. | ° ′ | Min. | Sc. Div. | Min. | Mic. Div. |
| 2 | 508·7 | 3 | 740·3 | 8 8 | 10 | 25 11·84 | 12 | 518·4 | 13 | 801·0 | 8 15 | 20 | 25 16·15 | 22 | 516·1 | 23 | 669·9 |
| 7 | 512·7 | 8 | 738·5 | | 20 | 12·85 | 22 | 515·1 | 23 | 800·3 | | 25 | 15·51 | 27 | 515·1 | 28 | 676·3 |
| 12 | 514·4 | 13 | 740·4 | | 30 | 13·46 | 32 | 517·7 | 33 | 796·4 | | 30 | 15·39 | 32 | 515·8 | 33 | 682·3 |
| 17 | 518·8 | 18 | 738·8 | | 45 | 14·40 | 47 | 519·9 | 48 | 792·1 | | 35 | 15·02 | 37 | 515·3 | 38 | 689·8 |
| | | | | 8 9 | 0 | 14·13 | 2 | 518·1 | 3 | 791·6 | | 40 | 15·29 | 42 | 515·5 | 43 | 697·8 |
| 22 | 514·7 | 23 | 741·7 | | 40 | 18·27 | 42 | 516·8 | 43 | 719·8 | | 45 | 15·72 | 47 | 515·9 | 48 | 703·5 |
| 27 | 508·3 | 28 | 744·5 | | 45 | 17·68 | 47 | 522·5 | 48 | 708·8 | | 50 | 15·47 | 52 | 515·4 | 53 | 705·9 |
| 32 | 508·0 | 33 | 743·8 | | 50 | 18·57 | 52 | 523·6 | 53 | 701·3 | | 55 | 15·05 | 57 | 517·7 | 58 | 708·0 |
| 37 | 511·6 | 38 | 742·1 | | 55 | 18·84 | 57 | 525·5 | 58 | 695·1 | 8 16 | 0 | 15·51 | 2 | 517·6 | 3 | 710·7 |
| 42 | 514·4 | 43 | 741·2 | 8 10 | 0 | 19·86 | 2 | 520·6 | 3 | 691·9 | | 30 | 15·52 | 32 | 514·3 | 33 | 722·6 |
| 47 | 512·3 | 48 | 740·9 | | 5 | 18·45 | 7 | 516·3 | 8 | 686·5 | 8 17 | 0 | 17·76 | 2 | 516·9 | 3 | 729·8 |
| 52 | 513·2 | 53 | 744·3 | | 10 | 15·61 | 12 | 516·0 | 13 | 679·7 | | 10 | 17·80 | 12 | 517·5 | 13 | 731·7 |
| 57 | 513·4 | 58 | 744·7 | | 15 | 13·41 | 17 | 516·4 | 18 | 677·4 | | 20 | 17·42 | 22 | 518·4 | 23 | 733·6 |
| 2 | 509·5 | 3 | 745·9 | | 20 | 13·36 | 22 | 515·5 | 23 | 677·8 | 8 18 | 0 | 17·24 | 2 | 517·5 | 3 | 740·7 |
| 7 | 511·2 | 8 | 747·7 | | 25 | 14·26 | 27 | 505·7 | 28 | 683·6 | 8 21 | 0 | 17·49 | 2 | 515·9 | 3 | 756·5 |
| 12 | 511·3 | 13 | 748·1 | | 30 | 12·95 | 32 | 501·2 | 33 | 685·5 | | 10 | 17·91 | 12 | 514·8 | 13 | 756·0 |
| 17 | 512·6 | 18 | 747·3 | | 35 | 10·85 | 37 | 504·7 | 38 | 694·5 | | 15 | 18·18 | 17 | 509·6 | | |
| 22 | 511·6 | | | | 40 | 08·92 | 42 | 510·0 | 43 | 699·7 | | 20 | 17·81 | 22 | 515·1 | 23 | 753·1 |
| 27 | 511·8 | 28 | 746·5 | | 45 | 10·60 | 47 | 507·2 | 48 | 703·5 | | 25 | 17·44 | | | | |
| 32 | 512·8 | | | | 50 | 11·98 | 52 | 504·6 | 53 | 708·6 | 8 22 | 0 | 18·07 | 2 | 510·2 | 3 | 759·2 |
| 37 | 513·7 | | | | 55 | 12·76 | 57 | 504·2 | 58 | 711·5 | | | | | | | |
| 2 | 513·5 | 3 | 747·3 | 8 11 | 0 | 11·52 | 2 | 513·7 | 3 | 707·0 | 9 6 | 0 | 25 13·46 | 2 | 525·5 | 3 | 799·2 |
| | | | | | 5 | 09·62 | 7 | 526·5 | 8 | 702·2 | | 20 | 10·74 | 22 | 515·7 | 23 | 799·8 |
| 2 | 526·6 | 3 | 783·8 | | 10 | 12·45 | 12 | 523·1 | 13 | 700·0 | | 30 | 10·33 | 32 | 517·8 | 33 | 796·4 |
| 7 | 523·9 | 8 | 782·1 | | 15 | 14·08 | 17 | 518·0 | 18 | 699·5 | | 35 | 10·65 | 37 | 528·8 | 38 | 797·7 |
| 12 | 520·1 | 13 | 783·0 | | 20 | 15·29 | 22 | 514·4 | 23 | 699·8 | | 40 | 11·61 | 42 | 524·5 | | |
| 17 | 528·8 | 18 | 781·5 | | 25 | 15·47 | 27 | 515·2 | | | | 45 | 12·31 | 47 | 525·6 | 48 | 796·5 |
| 22 | 527·1 | 23 | 782·4 | | 30 | 15·07 | 32 | 518·5 | 33 | 698·3 | | 50 | 13·39 | 52 | 525·3 | | |
| 27 | 531·5 | 28 | 785·6 | | 35 | 14·84 | 37 | 523·8 | | | 9 7 | 0 | 15·54 | 2 | 525·9 | 3 | 793·0 |
| 32 | 524·4 | 33 | 788·2 | | 40 | 15·42 | 42 | 523·5 | 43 | 700·5 | 9 8 | 0 | 17·56 | 2 | 524·5 | 3 | 768·5 |
| 37 | 525·8 | 38 | 789·7 | | 45 | 15·41 | 47 | 521·7 | 48 | 703·1 | 9 9 | 0 | 05·35 | 2 | 535·0 | 3 | 760·1 |
| 42 | 527·2 | 43 | 792·3 | | 50 | 15·58 | 52 | 519·6 | 53 | 707·8 | | 5 | 07·02 | 7 | 528·9 | 8 | 761·4 |
| 47 | 519·9 | 48 | 794·7 | | 55 | 15·12 | 57 | 518·0 | 58 | 711·5 | | 10 | 10·31 | 12 | 521·5 | 13 | 763·1 |
| 52 | 525·1 | 53 | 793·3 | 8 12 | 0 | 14·13 | 2 | 516·8 | 3 | 713·2 | | 15 | 12·08 | 17 | 513·7 | 18 | 765·0 |
| 57 | 534·4 | 58 | 794·4 | | 5 | 12·85 | 7 | 518·7 | 8 | 715·4 | | 20 | 14·10 | 22 | 510·9 | 23 | 766·3 |
| 2 | 526·7 | 3 | 801·2 | | 10 | 12·83 | 12 | 519·9 | 13 | 717·2 | | 25 | 16·10 | 27 | 512·2 | 28 | 763·2 |
| 7 | 521·7 | 8 | 809·6 | | 15 | 13·93 | 17 | 517·6 | 18 | 720·3 | | 30 | 15·44 | 32 | 519·6 | 33 | 754·0 |
| 12 | 513·7 | 13 | 816·5 | | 30 | 14·73 | 32 | 516·6 | 33 | 722·7 | | 35 | 15·04 | 37 | 521·3 | 38 | 747·8 |
| 17 | 520·5 | 18 | 817·7 | 8 13 | 0 | 15·36 | 2 | 513·6 | 3 | 726·8 | | 40 | 14·11 | 42 | 519·8 | 43 | 743·6 |
| 22 | 515·7 | 23 | 822·3 | | 10 | 15·85 | 12 | 517·4 | 13 | 729·1 | | 45 | 13·09 | 47 | 517·1 | 48 | 741·2 |
| 27 | 516·4 | 28 | 823·9 | | 25 | 17·13 | 27 | 517·8 | 28 | 722·7 | | 50 | 11·54 | 52 | 521·1 | 53 | 738·7 |
| 32 | 514·9 | 33 | 825·7 | | 40 | 20·00 | 42 | 511·8 | 43 | 712·0 | | 55 | 10·36 | 57 | 526·4 | | |
| 37 | 518·4 | 38 | 827·8 | | 45 | 22·37 | 47 | 506·8 | 48 | 704·6 | 9 10 | 0 | 10·11 | 2 | 529·7 | 3 | 733·3 |
| 42 | 512·5 | 43 | 828·7 | | 50 | 24·82 | 52 | 501·9 | 53 | 697·5 | | 5 | 09·96 | 7 | 530·1 | 8 | 732·5 |
| 47 | 510·0 | 48 | 832·0 | | 55 | 26·87 | 57 | 499·2 | 58 | 686·3 | | 10 | 09·91 | 12 | 531·1 | 13 | 733·6 |
| 49 | 505·1 | | | 8 14 | 0 | 28·50 | 2 | 493·4 | 3 | 667·0 | | 15 | 10·41 | 17 | 529·9 | | |
| 52 | 509·7 | 53 | 833·4 | | 5 | 29·41 | 7 | 491·7 | 8 | 649·6 | | 25 | 10·63 | 27 | 527·8 | | |
| 57 | 512·4 | 58 | 833·8 | | 10 | 28·94 | 12 | 492·6 | 13 | 633·6 | 9 11 | 0 | 14·06 | 2 | 517·3 | 3 | 728·6 |
| 2 | 516·8 | 3 | 831·6 | | 15 | 28·27 | 17 | 495·8 | 18 | 624·2 | | 5 | 13·44 | 7 | 514·0 | 8 | 730·7 |
| 7 | 527·1 | 8 | 830·7 | | 20 | 27·17 | 22 | 496·7 | 23 | 616·9 | | 10 | 11·98 | 12 | 515·1 | 13 | 731·1 |
| 12 | 525·9 | 13 | 829·2 | | 25 | 27·59 | 27 | 498·3 | 28 | 616·9 | | 15 | 11·44 | 17 | 516·9 | 18 | 730·6 |
| 17 | 521·9 | 18 | 828·0 | | 30 | 27·41 | 32 | 499·5 | 33 | 619·3 | | 20 | 12·22 | | | | |
| 22 | 510·2 | 23 | 828·6 | | 35 | 26·54 | 37 | 501·3 | 38 | 619·8 | | 30 | 12·98 | 32 | 516·0 | 33 | 730·1 |
| 27 | 508·5 | 28 | 826·4 | | 40 | 24·48 | 42 | 504·8 | | | 9 12 | 0 | 16·32 | 2 | 508·0 | 3 | 734·8 |
| 32 | 510·6 | 33 | 822·6 | | 45 | 23·81 | 47 | 507·6 | 48 | 625·6 | | 5 | 18·81 | 7 | 507·4 | 8 | 734·0 |
| 37 | 520·1 | 38 | 816·9 | | 50 | 22·27 | 52 | 511·4 | 53 | 629·8 | | 10 | 19·53 | 12 | 507·0 | 13 | 730·2 |
| 42 | 526·5 | 43 | 813·2 | | 55 | 20·90 | 57 | 514·4 | 58 | 634·8 | | 15 | 19·41 | 17 | 510·2 | 18 | 723·6 |
| 47 | 526·3 | 48 | 810·7 | 8 15 | 0 | 19·64 | 2 | 516·4 | 3 | 644·2 | | 20 | 19·44 | 22 | 514·2 | 23 | 718·4 |
| 52 | 524·2 | 53 | 807·5 | | 5 | 18·13 | 7 | 517·3 | 8 | 646·1 | | 25 | 19·39 | 27 | 517·4 | 28 | 712·5 |
| 57 | 523·5 | 58 | 806·0 | | 10 | 16·87 | 12 | 517·6 | 13 | 656·0 | | 30 | 19·64 | 32 | 517·2 | 33 | 705·3 |
| 2 | 519·9 | 3 | 804·1 | | 15 | 16·80 | 17 | 516·9 | 18 | 661·5 | | 35 | 19·55 | 37 | 513·4 | 38 | 699·7 |

BIFILAR. $k$=0·000140. BALANCE. $k$=0·0000085.

| Gött. Mean Time. | Declination. | | Bifilar Corrected. | | Balance Corrected. | |
|---|---|---|---|---|---|---|
| d. h. | Min. | ° ′ | Min. | Sc. Div. | Min. | Mic. Div. |
| 9 12 | 40 | 25 18·54 | 42 | 511·8 | 43 | 695·8 |
| * | 45 | 18·11 | 47 | 513·3 | 48 | 697·0 |
| 10 17 | 0 | 25 14·04 | 2 | 515·7 | 3 | 741·4 |
| | 10 | 15·07 | 12 | 515·7 | 13 | 746·0 |
| | 20 | 16·82 | 22 | 517·7 | 23 | 747·9 |
| | 45 | 17·56 | | | | |
| 10 18 | 0 | 17·42 | 2 | 519·8 | 3 | 746·1 |
| 10 19 | 0 | 16·01 | 2 | 520·3 | 3 | 745·7 |
| | 15 | 17·42 | 17 | 517·6 | 18 | 748·2 |
| 10 20 | 0 | 16·95 | 2 | 517·7 | 3 | 752·7 |
| 11 10 | 0 | 25 14·73 | 2 | 517·4 | 3 | 741·7 |
| | 10 | 13·86 | 12 | 513·7 | 13 | 744·9 |
| | 20 | 13·44 | 22 | 508·5 | 23 | 750·3 |
| | 25 | 12·11 | 27 | 510·7 | 28 | 752·7 |
| | 30 | 11·57 | 32 | 510·8 | 33 | 754·1 |
| | 35 | 10·74 | 37 | 513·6 | 38 | 754·9 |
| | 40 | 11·61 | 42 | 515·5 | 43 | 754·0 |
| | 45 | 11·84 | 47 | 514·4 | 48 | 757·2 |
| | 50 | 14·41 | 52 | 511·9 | 53 | 757·8 |
| 11 11 | 0 | 15·11 | 2 | 512·1 | 3 | 757·7 |
| | 5 | 14·87 | 7 | 512·2 | 8 | 755·8 |
| | 10 | 14·84 | 12 | 512·6 | | |
| | 15 | 14·65 | 17 | 511·4 | 18 | 756·3 |
| | 20 | 17·13 | 22 | 510·5 | 23 | 756·2 |
| | 25 | 17·07 | 27 | 510·3 | 28 | 754·0 |
| | 30 | 16·26 | 32 | 513·2 | 33 | 751·9 |
| | 35 | 16·21 | 37 | 514·3 | 38 | 751·7 |
| | 45 | 16·08 | 47 | 515·0 | 48 | 750·0 |
| 11 12 | 0 | 15·47 | 2 | 519·5 | 3 | 746·1 |
| 12 2 | 0 | 25 25·33 | 2 | 517·1 | 3 | 763·2 |
| | 30 | 24·82 | 32 | 518·4 | 33 | 766·6 |
| 12 3 | 0 | 25·16 | 2 | 517·4 | 3 | 769·6 |
| 12 11 | 0 | 19·46 | 2 | 532·3 | 3 | 736·0 |
| * | 5 | 18·14 | 7 | 527·0 | 8 | 731·2 |
| | 10 | 16·25 | 12 | 524·9 | 13 | 726·4 |
| | 15 | 14·94 | 17 | 525·7 | 18 | 725·1 |
| | 20 | 14·73 | 22 | 525·5 | 23 | 722·4 |
| | 25 | 14·68 | 27 | 525·7 | 28 | 720·5 |
| | 30 | 14·37 | 32 | 526·6 | 33 | 719·6 |
| | 35 | 15·47 | 37 | 525·2 | 38 | 716·9 |
| | 40 | 15·98 | | | | |
| 12 12 | 0 | 14·06 | 2 | 520·7 | 3 | 711·8 |
| | 5 | 13·76 | 7 | 519·3 | 8 | 712·1 |
| | 10 | 13·46 | 12 | 517·9 | 13 | 711·7 |
| | 15 | 12·95 | 17 | 517·1 | 18 | 712·1 |
| | 20 | 12·78 | 22 | 517·7 | 23 | 712·0 |
| | 25 | 12·73 | 27 | 517·8 | 28 | 713·4 |
| | 30 | 13·19 | 32 | 515·8 | 33 | 715·3 |
| | 35 | 13·43 | 37 | 514·7 | 38 | 716·3 |
| | 40 | 13·97 | 42 | 513·5 | 43 | 717·6 |
| | 45 | 14·20 | 47 | 512·5 | 48 | 720·3 |
| | 50 | 14·38 | 52 | 511·5 | 53 | 721·5 |
| | 55 | 14·33 | 57 | 511·2 | 58 | 722·8 |
| 12 13 | 0 | 14·40 | 2 | 510·9 | 3 | 723·7 |
| | 5 | 14·20 | 7 | 512·1 | 8 | 724·7 |
| | 10 | 14·68 | | | | |
| 12 14 | 0 | 14·18 | 2 | 517·7 | 3 | 718·6 |

| Gött. Mean Time. | Declination. | | Bifilar Corrected. | | Balance Corrected. | |
|---|---|---|---|---|---|---|
| d. h. | Min. | ° ′ | Min. | Sc. Div. | Min. | Mic. Div. |
| 17 17 | 0 | 25 19·34 | 2 | 519·1 | 3 | 734·2 |
| | 25 | 18·72 | 27 | 524·9 | 28 | 724·4 |
| | 30 | 18·05 | 32 | 526·1 | 33 | 722·2 |
| | 35 | 17·42 | 37 | 526·9 | | |
| | 40 | 16·82 | 42 | 527·3 | | |
| 17 18 | 0 | 15·91 | 2 | 524·4 | 3 | 723·0 |
| 17 21 | 0 | 13·69 | 2 | 519·0 | 3 | 739·3 |
| | 10 | 13·83 | 12 | 529·5 | 13 | 740·2 |
| | 15 | 13·12 | | | | |
| 17 22 | 0 | 14·17 | 2 | 514·6 | 3 | 738·9 |
| 18 9 | 0 | 25 11·22 | 2 | 519·7 | 3 | 767·2 |
| | 5 | 07·11 | 7 | 525·0 | 8 | 768·0 |
| | 10 | 06·19 | 12 | 524·7 | 13 | 772·4 |
| | 15 | 05·70 | 17 | 524·0 | 18 | 775·6 |
| | 20 | 06·12 | 22 | 521·7 | 23 | 777·4 |
| | 25 | 07·72 | 27 | 518·8 | 28 | 777·7 |
| | 30 | 09·15 | 32 | 516·7 | 33 | 779·2 |
| | 35 | 10·51 | 37 | 515·2 | 38 | 778·4 |
| | 40 | 10·36 | 42 | 520·0 | 43 | 773·6 |
| | 45 | 11·12 | 47 | 526·5 | 48 | 768·7 |
| | 50 | 11·98 | 52 | 527·3 | 53 | 763·2 |
| | 55 | 12·38 | 57 | 525·9 | 58 | 760·7 |
| 18 10 | 0 | 12·93 | 2 | 523·3 | 3 | 759·1 |
| | 15 | 11·44 | 17 | 510·9 | 18 | 754·0 |
| | 20 | 11·03 | 22 | 522·3 | 23 | 751·8 |
| | 25 | 10·70 | 27 | 523·1 | 28 | 749·5 |
| | 30 | 10·70 | 32 | 523·1 | 33 | 747·0 |
| | 40 | 10·63 | 42 | 522·0 | 43 | 742·1 |
| | 45 | 09·54 | 47 | 522·5 | 48 | 738·8 |
| | 50 | 09·27 | 52 | 519·4 | 53 | 739·2 |
| | 55 | 09·60 | 57 | 517·5 | 58 | 740·3 |
| 18 11 | 0 | 09·59 | 2 | 518·3 | 3 | 740·8 |
| | 5 | 08·97 | 7 | 519·7 | 8 | 740·0 |
| | 10 | 08·75 | 12 | 519·4 | 13 | 740·9 |
| | 15 | 09·08 | 17 | 519·3 | 18 | 741·1 |
| | 20 | 08·97 | 22 | 518·6 | 23 | 741·8 |
| | 25 | 08·70 | | | | |
| | 30 | 09·49 | | | | |
| | 35 | 10·07 | 37 | 522·4 | 38 | 741·5 |
| | 45 | 11·39 | 47 | 523·8 | 48 | 740·6 |
| | 55 | 12·78 | 57 | 525·1 | 58 | 738·8 |
| 18 12 | 0 | 13·44 | 2 | 524·7 | 3 | 738·6 |
| | 5 | 14·06 | 7 | 524·5 | 8 | 739·0 |
| 18 13 | 0 | 15·98 | 2 | 512·9 | 3 | 735·5 |
| 18 17 | 0 | 11·41 | 2 | 520·9 | 3 | 724·9 |
| | 15 | 13·59 | 17 | 524·0 | 18 | 725·9 |
| | 20 | 14·48 | 22 | 523·3 | 23 | 726·6 |
| | | | 42 | 524·0 | 43 | 723·5 |
| | 45 | 14·85 | 47 | 525·0 | 48 | 722·4 |
| | 50 | 14·81 | 52 | 527·8 | 53 | 721·2 |
| | 55 | 14·60 | 57 | 527·9 | 58 | 720·5 |
| 18 18 | 0 | 14·06 | 2 | 528·9 | 3 | 720·1 |
| | 10 | 13·12 | 12 | 530·6 | 13 | 718·0 |
| | 15 | 13·36 | | | | |
| 18 19 | 0 | 14·80 | 2 | 523·0 | 3 | 721·4 |
| 18 22 | 0 | 16·36 | 2 | 497·1 | 3 | 732·7 |
| | 10 | 18·16 | 12 | 492·3 | 13 | 736·0 |
| | 15 | 19·31 | 17 | 489·3 | 18 | 737·8 |
| | 20 | 18·70 | 22 | 486·0 | 23 | 738·6 |
| | 25 | 19·48 | 27 | 486·9 | 28 | 737·0 |

| Gött. Mean Time. | Declination. | |
|---|---|---|
| d. h. | Min. | ° ′ |
| 18 22 | 30 | 25 20·82 |
| | 35 | 22·25 |
| | 40 | 23·54 |
| | 45 | 24·96 |
| | 50 | 26·21 |
| | 55 | 26·57 |
| 18 23 | 0 | 26·94 |
| | 5 | 27·22 |
| | 10 | 26·25 |
| | 15 | 25·19 |
| | 20 | 23·72 |
| | 25 | 22·89 |
| | 30 | 22·18 |
| | 35 | 21·29 |
| | 40 | 20·58 |
| | 45 | 20·18 |
| | 50 | 20·25 |
| | 55 | 19·86 |
| 19 0 | 0 | 20·11 |
| 19 8 | 0 | 25 10·09 |
| | 5 | 10·09 |
| | 10 | 10·83 |
| | 30 | 12·09 |
| | 35 | 14·89 |
| | 40 | 16·15 |
| | 45 | 16·80 |
| | 50 | 17·46 |
| | 55 | 17·02 |
| 19 9 | 0 | 17·15 |
| | 5 | 17·49 |
| | 10 | 18·10 |
| | 15 | 16·84 |
| | 20 | 17·87 |
| | 25 | 16·63 |
| | 30 | 16·65 |
| | 35 | 16·72 |
| 19 10 | 0 | 15·32 |
| | 5 | 15·38 |
| | 10 | 15·41 |
| 19 11 | 0 | 15·56 |
| 19 17 | 0 | 25 19·93 |
| | 10 | 20·72 |
| | 15 | 20·70 |
| | 20 | 20·16 |
| | 25 | 19·61 |
| 19 18 | 0 | 17·02 |
| 19 19 | 0 | 17·84 |
| | 35 | 17·47 |
| | 40 | 17·56 |
| 19 20 | 0 | 17·17 |
| 21 11 | 0 | 25 14·77 |
| | 10 | 14·17 |
| | 20 | 15·54 |
| 21 12 | 0 | 15·62 |
| 22 9 | 0 | 25 15·56 |
| | 5 | 14·53 |

BIFILAR. $k=0{\cdot}000140$. BALANCE. $k=0{\cdot}0000085$.

March 19d 8h 30m—40m. Declination magnet vibrating 4′.

* See notes on the Aurora Borealis, *after* the *Extra Observations of Magnetometers*.

| Bifilar Corrected. | | Balance Corrected. | | Gött. Mean Time. | Declination. | | Bifilar Corrected. | | Balance Corrected. | | Gött. Mean Time. | Declination. | | Bifilar Corrected. | | Balance Corrected. | |
|---|---|---|---|---|---|---|---|---|---|---|---|---|---|---|---|---|---|
| Min. | Sc. Div. | Min. | Mic. Div. | d. h. | Min. | ° ′ | Min. | Sc. Div. | Min. | Mic. Div. | d. h. | Min. | ° ′ | Min. | Sc. Div. | Min. | Mic. Div. |
| 32 | 489·7 | 33 | 736·5 | 22 9 | 10 | 25 15·44 | 12 | 527·1 | 13 | 745·4 | 29 10 | | | 2 | 457·6 | | |
| 37 | 490·0 | 38 | 737·4 | | 15 | 16·21 | 17 | 525·5 | 18 | 747·3 | | | | 3 | 462·6 | 3 | 679·1 |
| 42 | 492·3 | 43 | 736·1 | | 20 | 16·68 | 22 | 525·5 | 23 | 748·6 | | 5 | 25 25·78 | 4 | 461·9 | | |
| 47 | 493·6 | 48 | 735·8 | | 25 | 16·77 | | | | | | 6 | 24·93 | 7 | 463·0 | 8 | 635·9 |
| 52 | 492·4 | | | | 30 | 16·66 | 32 | 525·3 | 33 | 748·8 | | 10 | 19·93 | 9 | 470·6 | | |
| 57 | 495·4 | 58 | 730·7 | 22 10 | 0 | 16·01 | 2 | 520·2 | 3 | 750·8 | | | | 11 | 478·3 | 11 | 625·8 |
| 2 | 491·6 | 3 | 729·3 | | 5 | 15·34 | 7 | 522·1 | 8 | 750·3 | | | | 12 | 477·9 | | |
| 7 | 503·6 | 8 | 726·5 | | 10 | 14·23 | 12 | 522·5 | 13 | 750·3 | | 14 | 16·99 | 13 | 479·4 | 13 | 620·9 |
| 12 | 496·7 | 13 | 720·3 | | 15 | 14·15 | 17 | 524·6 | 18 | 750·2 | | 15 | 16·23 | 16 | 480·2 | 16 | 612·6 |
| 17 | 498·1 | 18 | 717·0 | | 20 | 14·03 | | | | | | | | 17 | 479·0 | 18 | 604·1 |
| 22 | 498·3 | 23 | 713·7 | 22 11 | 0 | 12·83 | 2 | 526·2 | 3 | 734·3 | | 20 | 18·58 | 19 | 485·8 | | |
| 27 | 501·0 | 28 | 712·9 | | | | | | | | | 21 | 06·90 | 22 | 493·3 | 23 | 630·5 |
| 32 | 501·6 | 33 | 712·4 | 26 10 | 0 | 25 18·16 | 2 | 529·3 | 3 | 736·0 | | 25 | 01·92 | 24 | 507·6 | | |
| 37 | 502·1 | 38 | 713·8 | | 10 | 18·43 | 12 | 533·4 | 13 | 734·7 | | 26 | 25 00·53 | 27 | 509·5 | 28 | 660·4 |
| 42 | 504·0 | 43 | 714·6 | | 20 | 18·27 | 22 | 530·4 | 23 | 736·2 | | 30 | 24 57·14 | 29 | 514·5 | | |
| 47 | 506·8 | 48 | 716·5 | 26 11 | 0 | 18·16 | 2 | 530·7 | 3 | 733·0 | | 31 | 56·08 | 32 | 520·5 | 33 | 675·5 |
| 52 | 508·4 | | | | | | | | | | | 34 | 55·83 | | | | |
| 57 | 509·4 | 58 | 719·9 | 27 7 | 0 | 25 14·71 | 2 | 524·4 | 3 | 793·7 | | 35 | 54·63 | 37 | 506·9 | 38 | 670·0 |
| 2 | 513·4 | 3 | 719·9 | | 30 | 19·62 | 32 | 520·9 | 33 | 785·3 | | 36 | 53·83 | 39 | 513·2 | | |
| | | | | 27 8 | 0 | 19·56 | 2 | 527·4 | 3 | 772·4 | | 40 | 52·84 | | | | |
| 2 | 518·4 | 3 | 770·4 | 27 13 | 0 | 10·70 | 2 | 539·4 | 3 | 684·0 | | 41 | 53·05 | 42 | 504·1 | 43 | 662·5 |
| 7 | 518·7 | 8 | 773·8 | | 15 | 09·40 | 17 | 524·6 | 18 | 674·3 | | 45 | 53·96 | 44 | 497·8 | | |
| | | | | | 20 | 08·61 | 22 | 525·0 | 23 | 673·7 | | 46 | 54·18 | 47 | 499·3 | 48 | 657·8 |
| 32 | 537·4 | 33 | 759·0 | | 25 | 08·82 | 27 | 525·2 | 28 | 673·8 | | 50 | 55·15 | 52 | 490·5 | 53 | 663·2 |
| 37 | 536·8 | 38 | 755·7 | | 30 | 10·56 | 32 | 524·7 | 33 | 673·6 | | | | 54 | 484·1 | | |
| 42 | 534·4 | 43 | 754·0 | | 35 | 11·24 | 37 | 523·1 | 38 | 681·2 | | 55 | 55·58 | 57 | 479·8 | 58 | 657·6 |
| 47 | 528·7 | 48 | 754·1 | | 55 | 12·65 | 57 | 519·6 | 58 | 685·8 | 29 11 | 0 | 52·13 | 2 | 476·7 | 3 | 652·8 |
| 52 | 524·1 | 53 | 754·2 | 27 14 | 0 | 12·98 | 2 | 518·5 | 3 | 689·9 | | 5 | 48·50 | | | | |
| 56 | 538·9 | | | | 5 | 13·49 | 7 | 517·4 | 8 | 692·0 | | 6 | 48·00 | 7 | 477·0 | | |
| 57 | 541·8 | 58 | 741·3 | | 10 | 13·93 | 12 | 516·7 | 13 | 694·6 | | 8 | 47·22 | | | 8 | 633·9 |
| 2 | 542·7 | 3 | 734·0 | | 15 | 14·13 | 17 | 516·3 | 18 | 699·3 | | 10 | 47·35 | | | | |
| 7 | 539·5 | 8 | 731·2 | 27 15 | 0 | 14·70 | 2 | 519·3 | 3 | 720·2 | | 11 | 47·77 | 12 | 478·3 | 13 | 619·5 |
| 12 | 532·1 | 13 | 729·7 | | | | | | | | | 15 | 48·75 | 14 | 477·1 | | |
| 17 | 531·4 | 18 | 730·5 | 28 8 | 0 | 25 15·51 | 2 | 524·5 | 3 | 773·5 | | 16 | 49·15 | 17 | 478·9 | 18 | 616·0 |
| 22 | 524·7 | 23 | 732·5 | | 15 | 14·98 | 17 | 519·8 | 18 | 779·5 | | | | 19 | 479·3 | | |
| 27 | 524·6 | 28 | 735·8 | | 20 | 13·54 | 22 | 522·9 | 23 | 780·0 | | 20 | 49·91 | 21 | 477·0 | 22 | 619·2 |
| 32 | 522·7 | 33 | 738·3 | | 25 | 13·67 | 27 | 526·2 | 28 | 779·0 | | | | 23 | 479·0 | | |
| | | | | | 30 | 15·51 | 32 | 527·5 | 33 | 779·0 | | 25 | 51·50 | | | | |
| 2 | 521·7 | 3 | 745·6 | | 35 | 16·21 | 37 | 526·9 | 38 | 777·4 | * | 26 | 51·69 | 27½ | 483·6 | 28 | 633·0 |
| 7 | 522·2 | 8 | 747·6 | | 40 | 16·79 | | | | | | | | 29 | 481·7 | | |
| 12 | 523·0 | 13 | 747·4 | 28 9 | 0 | 18·08 | 2 | 530·9 | 3 | 764·0 | | 30 | 52·77 | 31 | 477·3 | | |
| 2 | 525·7 | 3 | 740·8 | 28 10 | 0 | 18·11 | 2 | 528·1 | 3 | 753·4 | | | | 32 | 476·9 | 33 | 624·5 |
| | | | | | 30 | 18·27 | 32 | 526·0 | 33 | 755·7 | | 35 | 53·24 | 37 | 471·7 | 38 | 617·5 |
| 2 | 517·2 | 3 | 735·9 | 28 11 | 0 | 18·16 | 2 | 528·0 | 3 | 751·1 | | 40 | 53·79 | 42½ | 472·6 | 43 | 612·1 |
| 12 | 519·6 | 13 | 732·2 | | | | | | | | | 45 | 54·97 | 47 | 472·4 | 48 | 608·0 |
| 17 | 520·1 | | | 29 0 | 0 | 25 22·15 | 2 | 516·2 | 3 | 731·9 | | 50 | 56·25 | 52 | 479·9 | 53 | 617·8 |
| 22 | 521·5 | 23 | 729·8 | | 25 | 22·33 | 27 | 513·6 | 28 | 731·4 | | 55 | 24 58·97 | 57 | 474·3 | 58 | 621·8 |
| 27 | 522·2 | 28 | 727·8 | | 30 | 22·08 | 32 | 513·4 | 33 | 731·2 | 29 12 | 0 | 25 00·53 | 2 | 475·0 | 3 | 619·0 |
| 2 | 517·8 | 3 | 720·1 | 29 1 | 0 | 22·85 | 2 | 514·0 | 3 | 733·0 | * | 5 | 01·96 | 7 | 482·5 | 8 | 619·4 |
| 2 | 525·4 | 3 | 709·8 | | | | | | | | | 10 | 04·42 | 12 | 485·1 | 13 | 607·2 |
| 37 | 525·7 | 38 | 710·9 | 29 8 | 0 | 25 18·21 | 2 | 540·6 | 3 | 739·0 | | 15 | 06·79 | 17 | 489·8 | 18 | 586·0 |
| 42 | 526·4 | 43 | 711·4 | | 10 | 18·82 | 12 | 530·1 | 13 | 740·5 | | 20 | 07·31 | 22 | 495·5 | 23 | 560·9 |
| 2 | 525·8 | 3 | 712·4 | | 15 | 18·57 | 17 | 534·1 | | | | 25 | 08·12 | 27 | 492·9 | 28 | 538·2 |
| | | | | | 20 | 17·61 | 22 | 541·8 | 23 | 739·4 | | 30 | 07·10 | 32 | 485·4 | 33 | 497·3 |
| 2 | 522·9 | 3 | 717·5 | | 25 | 17·98 | 27 | 536·1 | | | | 35 | 25 03·27 | 37 | 493·0 | 38 | 480·2 |
| 12 | 524·2 | 13 | 721·2 | | 30 | 18·16 | 32 | 539·5 | 33 | 739·1 | | 40 | 24 59·91 | 42 | 496·6 | 43 | 471·0 |
| 22 | 524·7 | 23 | 723·5 | 29 9 | 0 | 17·46 | 2 | 533·2 | 3 | 748·9 | | 45 | 56·68 | 47 | 488·8 | 48 | 455·9 |
| 2 | 526·1 | 3 | 723·4 | | 56 | 21·0 | 56 | 484·7 | | | | 50 | 55·04 | 52 | 489·2 | 53 | 444·1 |
| | | | | | | | 57 | 479·2 | 58 | 744·1 | | 55 | 52·60 | 57 | 490·5 | 58 | 431·9 |
| 2 | 523·9 | 3 | 735·5 | | | | 59 | 466·4 | | | 29 13 | 0 | 53·27 | 2 | 489·7 | 3 | 419·1 |
| 7 | 526·6 | 8 | 741·8 | 29 10 | 0 | 26·23 | 1 | 457·2 | 1 | 703·0 | * | 5 | 54·99 | 7 | 488·8 | 8 | 399·1 |

BIFILAR. $k=0{\cdot}000140$. BALANCE. $k=0{\cdot}0000085$.

March 26d 10h 20m. The bifilar magnetometer seems to be slightly disturbed; the declination is quite steady.

* See notes on the Aurora Borealis, *after* the *Extra Observations of Magnetometers*.

| Gött. Mean Time. | Declination. | | Bifilar Corrected. | | Balance Corrected. | | Gött. Mean Time. | Declination. | | Bifilar Corrected. | | Balance Corrected. | | Gött. Mean Time. | Declination. | |
|---|---|---|---|---|---|---|---|---|---|---|---|---|---|---|---|---|
| d. h. | Min. | ° ′ | Min. | Sc. Div. | Min. | Mic. Div. | d. h. | Min. | ° ′ | Min. | Sc. Div. | Min. | Mic. Div. | d. h. | Min. | ° ′ |
| 29 13 | 10 | 24 54·38 | 12 | 474·8 | 13 | 378·1 | 29 14 | 25 | 25 22·45 | 25 | 423·4 | | | 29 16 | 55 | 25 11·44 |
| | 15 | 50·46 | 17 | 485·2 | 18 | 358·2 | | | | 26 | 425·8 | 26 | 377·3 | 29 17 | 0 | 10·77 |
| | 20 | 48·40 | 22 | 466·1 | 23 | 324·8 | | 27 | 23·95 | 27 | 427·8 | | | | 30 | 13·66 |
| | 25 | 50·90 | 26 | 439·7 | | | | 28 | 24·48 | 28 | 431·9 | | | | 35 | 15·74 |
| | | | 27 | 435·6 | 28 | 289·0 | | | | 29 | 431·8 | 29 | 364·8 | | 40 | 17·89 |
| | | | 29 | 431·2 | | | | 30 | 23·22 | 30 | 434·4 | | | | 45 | 20·27 |
| | 30 | 55·27 | 30 | 426·7 | | | | | | 31 | 437·5 | 31 | 369·5 | | 50 | 17·87 |
| | | | 31 | 423·8 | 31 | 286·9 | | 32 | 22·04 | 32 | 423·6 | | | | 55 | 15·78 |
| | 32 | 55·56 | 32 | 419·2 | | | | 33 | 22·53 | 33 | 452·0 | | | 29 18 | 0 | 12·46 |
| | 33 | 55·15 | 33 | 416·1 | | | | | | 34 | 448·8 | 34 | 387·2 | | 5 | 10·47 |
| | | | 34 | 412·8 | 34 | 283·6 | | 35 | 23·43 | 35 | 445·5 | | | | | |
| | 35 | 56·95 | 35 | 407·7 | | | | | | 36 | 446·0 | 36 | 391·1 | | 10 | 15·24 |
| | | | 36 | 407·0 | 36 | 286·6 | | 37 | 24·48 | 37 | 441·3 | | | | | |
| | 37 | 57·98 | 37 | 408·6 | | | | 38 | 24·33 | 38 | 437·2 | | | | | |
| | 38 | 24 59·16 | 38 | 412·4 | | | | | | 39 | 440·5 | 39 | 382·4 | | 15 | 21·16 |
| | | | 39 | 412·4 | 39 | 298·6 | | 40 | 23·54 | 40 | 441·4 | | | | | |
| | 40 | 25 00·75 | 40 | 415·2 | | | | | | 41 | 441·2 | 41 | 376·2 | | | |
| | | | 41 | 416·7 | 41 | 308·7 | | 42 | 23·25 | 42 | 438·8 | | | | 20 | 24·82 |
| | 42 | 25 00·53 | 42 | 416·8 | | | | 43 | 23·07 | 43 | 437·8 | | | | | |
| | 43 | 25 00·38 | 43 | 412·5 | | | | | | 44 | 434·4 | 44 | 374·9 | | | |
| | | | 44 | 405·9 | 44 | 318·3 | | 45 | 23·72 | 45 | 434·1 | | | | 25 | 28·35 |
| | 45 | 24 59·10 | 45 | 402·2 | | | | | | 47 | 426·4 | 48 | 387·4 | | | |
| | | | 46 | 395·7 | 46 | 324·4 | * | 50 | 26·99 | 52 | 413·9 | 53 | 364·3 | | | |
| | 47 | 24 56·99 | 47 | 383·6 | | | | 55 | 21·91 | 57 | 410·9 | 58 | 362·3 | | 30 | 28·43 |
| | 48 | 24 59·09 | 48 | 379·8 | | | 29 15 | 0 | 18·38 | 2 | 414·1 | 3 | 308·3 | | | |
| | | | 49 | 382·1 | 49 | 328·7 | | 5 | 13·74 | 7 | 417·8 | 8 | 317·0 | | | |
| | 50 | 24 58·76 | 50 | 383·6 | | | | 10 | 16·82 | 12 | 419·7 | 13 | 323·8 | | 35 | 27·08 |
| | | | 51 | 387·5 | 51 | 340·4 | | 15 | 22·82 | 17 | 403·1 | 18 | 302·9 | | 40 | 27·26 |
| | 52 | 24 57·58 | 52 | 390·9 | | | | 20 | 23·75 | 22 | 396·7 | 23 | 294·5 | | 45 | 26·25 |
| | 53 | 25 00·30 | 53 | 393·9 | | | | 25 | 23·83 | 27 | 395·7 | 28 | 281·0 | | 50 | 24·37 |
| | | | 54 | 400·3 | 54 | 326·3 | | 30 | 19·05 | 32 | 456·4 | | | | 55 | 22·92 |
| | 55 | 04·96 | 55 | 397·6 | | | | | | 33 | 468·5 | 33 | 281·8 | 29 19 | 0 | 21·88 |
| | | | 56 | 394·0 | 56 | 354·1 | | | | 34 | 471·2 | | | | 5 | 19·37 |
| | 57 | 05·49 | 57 | 390·2 | | | | 35 | 11·95 | 35 | 469·7 | | | | 10 | 19·41 |
| | 58 | 06·43 | 58 | 388·3 | | | | | | 36 | 471·4 | 36 | 332·9 | | 15 | 21·07 |
| | | | 59 | 384·0 | 59 | 332·7 | | 37 | 12·92 | 37 | 478·1 | | | | 20 | 17·19 |
| 29 14 | 0 | 07·40 | 0 | 384·5 | | | | 38 | 11·57 | 38 | 481·8 | | | | 25 | 18·11 |
| | | | 1 | 386·2 | 1 | 336·6 | | | | 39 | 494·0 | 39 | 348·3 | | 30 | 18·57 |
| | 2 | 08·73 | 2 | 387·6 | | | | 40 | 08·56 | 40 | 495·3 | | | | 35 | 16·52 |
| | 3 | 07·92 | 3 | 385·9 | | | | | | 41 | 490·6 | | | | 40 | 19·86 |
| | | | 4 | 382·6 | 4 | 397·4 | | | | 42 | 494·1 | 42 | 358·4 | | 45 | 20·94 |
| | 5 | 09·51 | 5 | 393·3 | | | | 43 | 05·77 | 43 | 485·2 | | | | 50 | 18·63 |
| | | | 6 | 402·6 | 6 | 362·3 | | | | 44 | 487·6 | 44 | 369·1 | | 55 | 18·20 |
| | 7 | 15·83 | 7 | 416·4 | | | | 45 | 04·78 | 46 | 497·8 | | | 29 20 | 0 | 22·42 |
| | 8 | 17·49 | 8 | 409·3 | | | | | | 47 | 500·9 | 48 | 368·4 | | 5 | 22·00 |
| | | | 9 | 410·7 | 9 | 357·0 | | | | 49 | 507·8 | | | | 10 | 24·55 |
| | 10 | 20·74 | 10 | 415·2 | | | | 50 | 03·23 | 51 | 511·0 | | | | 15 | 24·20 |
| | | | 11 | 413·5 | 11 | 342·2 | | | | 52 | 510·2 | 53 | 367·9 | | 20 | 23·24 |
| | 12 | 21·03 | 12 | 410·3 | | | | | | 54 | 513·9 | | | | 25 | 22·31 |
| | 13 | 21·12 | 13 | 407·9 | | | | 55 | 03·48 | 57 | 513·5 | 58 | 373·2 | | 30 | 20·82 |
| | | | 14 | 408·3 | 14 | 310·6 | 29 16* | 0 | 03·50 | 2 | 506·5 | 3 | 379·4 | | 35 | 19·24 |
| | 15 | 20·25 | 15 | 403·4 | | | | 5 | 02·30 | 7 | 505·3 | 8 | 401·2 | | 40 | 19·93 |
| | | | 16 | 403·3 | 16 | 307·6 | | 10 | 02·57 | 12 | 511·9 | 13 | 432·9 | | 45 | 18·05 |
| | 17 | 21·23 | 17 | 400·3 | | | | 15 | 02·89 | 17 | 519·4 | 18 | 463·6 | | 50 | 17·65 |
| | 18 | 21·29 | 18 | 400·0 | | | | 20 | 04·37 | 22 | 515·6 | 23 | 486·2 | | 55 | 21·03 |
| | | | 19 | 402·1 | 19 | 318·9 | | 25 | 05·40 | 27 | 515·1 | 28 | 502·0 | 29 21 | 0 | 22·78 |
| | 20 | 21·86 | 20 | 404·7 | | | | 30 | 07·20 | 32 | 514·3 | 33 | 513·6 | | 5 | 23·34 |
| | | | 21 | 411·0 | 21 | 339·7 | | 35 | 08·79 | 37 | 513·2 | 38 | 527·0 | | 10 | 23·78 |
| | 22 | 23·29 | 22 | 417·8 | | | | 40 | 10·06 | 42 | 513·7 | 43 | 537·8 | | 15 | 22·89 |
| | 23 | 22·85 | 23 | 419·9 | | | | 45 | 10·85 | 47 | 514·3 | 48 | 544·4 | | 20 | 23·65 |
| | | | 24 | 423·0 | 24 | 367·3 | | 50 | 12·45 | 52 | 509·9 | 53 | 549·3 | | 25 | 26·70 |

BIFILAR. $k$=0·000140. BALANCE. $k$=0·0000085.

March 29d 13h 38m—14h 20m. The declination magnet vibrating 3′—5′, and the bifilar 8—15 divisions.
March 29d 15h 0m—25m. Declination magnet vibrating 4′; 20m—40m, bifilar vibrating 8—20 divisions.
* See notes on the Aurora Borealis, *after* the *Extra Observations of Magnetometers*.

| Bifilar Corrected. | | Balance Corrected. | | Gött. Mean Time. | Declination. | | Bifilar Corrected. | | Balance Corrected. | | Gött. Mean Time. | Declination. | | Bifilar Corrected. | | Balance Corrected. | |
|---|---|---|---|---|---|---|---|---|---|---|---|---|---|---|---|---|---|
| Min. | Sc. Div. | Min. | Mic. Div. | d. h. | Min. | ° ′ | Min. | Sc. Div. | Min. | Mic. Div. | d. h. | Min. | ° ′ | Min. | Sc. Div. | Min. | Mic. Div. |
| 57 | 511·4 | 58 | 553·0 | 29 21 | 30 | 25 28·90 | 32 | 482·3 | 33 | 663·9 | 30 1 | 26 | 25 33·90 | 27 | 510·4 | 28 | 795·4 |
| 2 | 515·8 | 3 | 552·3 | | 35 | 30·81 | | | | | | 29 | 35·33 | 29 | 508·9 | | |
| 32 | 532·4 | 33 | 527·1 | | 36 | 31·38 | 37 | 472·7 | 38 | 669·0 | | 30 | 35·87 | 30 | 504·2 | | |
| 37 | 525·1 | 38 | 522·4 | | | | 39 | 480·8 | | | | 31 | 34·35 | 31 | 506·2 | | |
| 42 | 512·1 | 43 | 520·1 | | 40 | 31·21 | | | | | | 32 | 33·33 | 32 | 506·0 | | |
| 47 | 490·6 | 48 | 511·0 | | 41 | 31·18 | 42 | 474·9 | 43 | 676·0 | | | | 33 | 501·8 | 33 | 802·6 |
| 52 | 476·5 | 53 | 487·7 | | | | 44 | 470·8 | | | | 34 | 35·09 | 34 | 499·8 | | |
| 57 | 467·5 | 58 | 455·3 | | 45 | 33·20 | | | | | | 35 | 35·62 | 35 | 500·1 | | |
| 2 | 427·5 | 3 | 397·7 | | 46 | 32·94 | 47 | 471·9 | 48 | 676·9 | | | | 36 | 498·1 | 36 | 809·6 |
| 6 | 423·6 | | | | | | 49 | 474·0 | | | | 37 | 34·75 | 37 | 493·0 | | |
| 7 | 425·0 | 8 | 378·6 | | 50 | 32·22 | 52 | 477·0 | 53 | 671·6 | | | | 38 | 496·5 | 38 | 814·7 |
| 11 | 441·8 | | | | 55 | 29·81 | 57 | 482·4 | 58 | 668·7 | | 39 | 34·32 | 39 | 498·7 | | |
| 12 | 445·5 | | | 29 22 | 0 | 28·55 | 2 | 488·7 | 3 | 671·8 | | 40 | 34·37 | 40 | 499·7 | | |
| 13 | 452·9 | 14 | 401·5 | | 5 | 28·77 | 7 | 491·4 | 8 | 671·4 | | | | 41 | 494·6 | | |
| 16 | 465·5 | | | | 10 | 29·07 | 12 | 492·2 | 13 | 672·7 | | 42 | 31·75 | 42 | 494·0 | | |
| 17 | 478·1 | 18 | 462·4 | | 15 | 28·58 | | | | | | | | 43 | 501·2 | 43 | 807·8 |
| 19 | 479·5 | | | | 20 | 27·01 | 22 | 489·3 | 23 | 679·6 | | | | 44 | 502·6 | | |
| 21 | 490·7 | | | | 25 | 26·77 | 27 | 490·5 | 28 | 683·7 | | 45 | 30·51 | 45 | 497·3 | | |
| 22 | 493·1 | 23 | 467·4 | 29 23 | 0 | 26·63 | 2 | 493·9 | 3 | 702·5 | | | | 46 | 505·5 | | |
| 24 | 496·3 | | | | 10 | 26·77 | 12 | 498·7 | 13 | 706·6 | | 47 | 31·32 | 47 | 510·6 | | |
| 26 | 498·1 | | | | 20 | 28·45 | 22 | 483·5 | 23 | 722·5 | | | | 48 | 522·0 | 48 | 846·6 |
| 27 | 500·4 | 28 | 460·3 | | 25 | 27·61 | 27 | 486·7 | 28 | 730·9 | | | | 49 | 517·0 | | |
| 29 | 502·1 | | | | 30 | 29·66 | 32 | 486·4 | 33 | 746·1 | | 50 | 31·43 | 50 | 523·8 | | |
| 31 | 500·1 | | | | 31 | 30·78 | 34 | 484·5 | | | | | | 51 | 523·6 | 51 | 854·8 |
| 32 | 501·7 | 33 | 402·1 | | 35 | 26·87 | | | | | | 52 | 29·59 | 52 | 521·9 | | |
| 34 | 502·7 | | | | 36 | 25·44 | 37 | 491·0 | 38 | 764·2 | | | | 53 | 521·2 | 53 | 859·4 |
| 37 | 507·3 | 38 | 401·7 | | | | 39 | 499·2 | | | | 55 | 27·51 | 55 | 523·8 | | |
| 42 | 512·0 | 43 | 396·9 | | 40 | 23·38 | 42 | 504·5 | 43 | 770·5 | | 57 | 26·94 | 58 | 517·7 | 58 | 864·1 |
| 47 | 511·4 | 48 | 406·0 | | 45 | 22·22 | 47 | 511·4 | 48 | 779·2 | 30 2 | 0 | 25·51 | 0 | 516·3 | | |
| 52 | 512·0 | 53 | 389·9 | | 50 | 24·64 | 52 | 510·9 | 53 | 791·0 | | | | 3 | 520·7 | 3 | 857·8 |
| 57 | 504·0 | 58 | 394·1 | | 55 | 27·10 | 57 | 507·4 | 58 | 801·8 | | 5 | 24·82 | 5 | 525·8 | | |
| 2 | 504·6 | 3 | 418·5 | 30 0 | 0 | 28·82 | 2 | 500·7 | 3 | 808·4 | | | | 8 | 520·2 | 8 | 858·2 |
| 7 | 516·4 | 8 | 386·8 | | 5 | 28·77 | 7 | 502·6 | 8 | 814·0 | | 10 | 25·93 | 10 | 537·1 | | |
| 12 | 521·0 | 13 | 454·7 | | 10 | 28·09 | 12 | 492·8 | 13 | 827·5 | | 11 | 24·28 | 11 | 525·0 | | |
| 17 | 515·0 | 18 | 482·3 | | 15 | 29·06 | 17 | 494·0 | 18 | 826·9 | | | | 12 | 523·6 | | |
| 22 | 521·8 | 23 | 497·3 | | 20 | 28·08 | 22 | 502·0 | 23 | 823·4 | | | | 13 | 535·6 | 13 | 853·7 |
| 27 | 523·4 | 28 | 513·8 | | 25 | 28·72 | 27 | 491·1 | 28 | 820·7 | | 14 | 25·54 | 14 | 537·3 | | |
| 32 | 516·8 | 33 | 527·4 | | 30 | 28·08 | 32 | 485·4 | 33 | 817·7 | | 15 | 25·53 | 15 | 531·9 | | |
| 37 | 522·6 | 38 | 533·8 | | 35 | 27·82 | 37 | 480·8 | 38 | 807·7 | | | | 16 | 527·4 | 16 | 855·5 |
| 42 | 517·2 | 43 | 545·4 | | 40 | 26·34 | 42 | 506·7 | 43 | 793·2 | | | | 17 | 525·4 | 18 | 858·0 |
| 47 | 511·4 | 48 | 552·0 | | 45 | 29·46 | 47 | 523·5 | 48 | 788·4 | | | | 19 | 528·2 | | |
| 52 | 501·7 | 53 | 558·3 | | 46 | 29·77 | 49 | 526·2 | | | | 20 | 26·77 | 20 | 526·7 | | |
| 57 | 504·5 | 58 | 567·3 | | 50 | 30·89 | | | | | | | | 21 | 525·1 | | |
| 2 | 498·1 | 3 | 575·0 | | 51 | 32·02 | 52 | 523·4 | 53 | 790·9 | | | | 22 | 522·1 | | |
| 7 | 501·8 | 8 | 584·4 | | | | 54 | 533·2 | | | | | | 23 | 518·4 | 23 | 851·7 |
| 12 | 498·3 | 13 | 596·4 | | 55 | 31·43 | | | | | | | | 24 | 517·6 | | |
| 17 | 496·7 | 18 | 601·1 | | 56 | 32·89 | 57 | 512·5 | 58 | 797·5 | | 25 | 25·53 | 25 | 516·1 | | |
| 22 | 503·5 | 23 | 602·7 | | | | 59 | 503·7 | | | | | | 26 | 522·6 | | |
| 27 | 496·6 | 28 | 609·0 | 30 1 | 0 | 30·69 | 2 | 503·9 | 3 | 799·1 | | | | 27 | 530·0 | | |
| 32 | 497·9 | 33 | 613·4 | | 5 | 30·10 | 7 | 498·0 | 8 | 799·1 | | | | 28 | 529·6 | 28 | 836·3 |
| 37 | 495·0 | 38 | 621·8 | | | | 9 | 494·5 | | | | | | 29 | 531·0 | | |
| 42 | 492·6 | 43 | 627·3 | | 10 | 31·53 | | | | | | 30 | 27·14 | 31 | 530·3 | | |
| 47 | 485·8 | 48 | 631·6 | | 11 | 32·26 | 12 | 500·5 | 13 | 798·4 | | 32 | 26·23 | 32 | 532·1 | 33 | 839·5 |
| 52 | 490·9 | 53 | 639·9 | | 14 | 33·36 | | | | | | 35 | 25·98 | 37 | 528·7 | 38 | 837·5 |
| 57 | 486·5 | 58 | 645·3 | | 15 | 32·00 | | | | | | | | 39 | 532·4 | | |
| 2 | 490·5 | 3 | 646·8 | | 16 | 32·12 | 17 | 511·1 | 18 | 790·7 | | 40 | 26·90 | 42 | 529·8 | 43 | 836·1 |
| 7 | 490·9 | | | | 19 | 34·61 | | | | | | 45 | 26·21 | 47 | 526·9 | 48 | 829·5 |
| 12 | 491·9 | 13 | 649·8 | | 20 | 35·63 | | | | | | 50 | 25·87 | 52 | 519·3 | 53 | 824·3 |
| 17 | 487·0 | 18 | 650·6 | | 21 | 35·92 | 22 | 519·5 | 23 | 790·5 | | 55 | 26·45 | 57 | 516·7 | 58 | 815·6 |
| 22 | 487·3 | 23 | 652·2 | | 24 | 36·91 | | | | | 30 3 | 0 | 28·18 | 2 | 514·3 | 3 | 809·1 |
| 27 | 488·4 | 28 | 656·3 | | 25 | 34·27 | | | | | | 5 | 31·03 | 7 | 517·0 | 8 | 808·6 |

BIFILAR. $k$=0·000140. BALANCE. $k$=0·0000085.

March 29d 21h 35m. The vibrations of the bifilar seem to be suddenly checked occasionally.
March 30d 1h 25m—30m. Declination magnet vibrating 3′—4′; 30m—50m, bifilar vibrating 8—12 divisions. 2h 8m—3h 40m. Declination vibrating 3′—5′, and bifilar 8—15 divisions.

| Gött. Mean Time. | | Declination. | | Bifilar Corrected. | | Balance Corrected. | | Gött. Mean Time. | | Declination. | | Bifilar Corrected. | | Balance Corrected. | | Gött. Mean Time. | | Declination. | |
|---|---|---|---|---|---|---|---|---|---|---|---|---|---|---|---|---|---|---|---|
| d. | h. | Min. | ° ′ | Min. | Sc. Div. | Min. | Mic. Div. | d. | h. | Min. | ° ′ | Min. | Sc. Div. | Min. | Mic. Div. | d. | h. | Min. | ° ′ |
| 30 | 3 | 10 | 25 33·23 | 12 | 507·4 | 13 | 813·4 | 30 | 7 | 0 | 25 02·55 | 2 | 523·0 | 3 | 813·2 | 30 | 9 | 45 | 25 11·61 |
| | | | | 14 | 505·7 | | | | | 5 | 04·14 | 7 | 526·9 | 8 | 809·8 | | | 50 | 12·48 |
| | | 15 | 31·11 | 16 | 499·8 | | | | | 10 | 07·27 | 12 | 519·7 | 13 | 813·3 | | | 55 | 00·57 |
| | | | | 17 | 495·4 | 18 | 821·9 | | | 15 | 07·31 | 17 | 517·5 | | | 30 | 10 | 0 | 12·82 |
| | | 20 | 30·85 | 19 | 492·7 | | | | | 20 | 07·40 | 22 | 517·1 | 23 | 809·3 | | | 5 | 12·25 |
| | | 21 | 29·50 | 22 | 478·2 | 23 | 840·1 | | | 25 | 07·31 | 27 | 518·0 | 28 | 805·6 | | | 10 | 10·33 |
| | | | | 24 | 477·6 | | | | | 30 | 08·25 | 32 | 516·5 | 33 | 805·0 | | | 15 | 11·77 |
| | | 25 | 22·42 | | | | | | | 50 | 13·63 | 52 | 515·7 | 53 | 790·9 | | | 20 | 18·18 |
| | | 26 | 21·06 | 27 | 490·3 | 28 | 848·8 | | | 55 | 14·80 | | | | | | | 25 | 26·68 |
| | | | | 29 | 501·9 | | | | | 56 | 15·14 | 57 | 555·9 | 58 | 755·9 | | | 30 | 28·76 |
| | | 30 | 17·02 | | | | | | | | | 59 | 563·6 | | | | | 35 | 26·54 |
| | | 31 | 16·15 | 32 | 505·4 | 33 | 861·9 | 30 | 8 | 0 | 29·93 | | | | | | | 40 | 24·46 |
| | | | | 34 | 516·3 | | | | | 1 | 31·79 | 2 | 545·6 | 3 | 723·8 | | | 45 | 22·22 |
| | | 35 | 08·75 | | | | | | | | | 4 | 524·9 | | | | | 50 | 20·82 |
| | | 36 | 07·29 | 37 | 534·3 | 38 | 866·0 | | | 5 | 32·46 | | | | | | | 55 | 20·82 |
| | | | | 39 | 550·0 | | | | | 6 | 30·24 | 7 | 494·9 | 8 | 707·9 | 30 | 11 | 0 | 20·16 |
| | | 40 | 06·37 | | | | | | | | | 9 | 501·0 | | | | | 5 | 19·49 |
| | | 41 | 06·56 | 42 | 552·3 | 43 | 858·6 | | | 10 | 12·83 | | | | | | | 10 | 20·15 |
| | | | | 44 | 550·5 | | | | | 11 | 12·33 | 12 | 523·4 | 13 | 656·3 | | | 20 | 18·95 |
| | | 45 | 11·72 | | | | | | | | | 14 | 535·3 | | | | | 25 | 16·36 |
| | | 46 | 11·84 | 47 | 550·5 | 48 | 848·4 | | | 15 | 18·20 | | | | | | | 30 | 14·91 |
| | | . | | 49 | 549·6 | | | | | 16 | 20·96 | 17 | 538·7 | 18 | 636·7 | | | 35 | 15·59 |
| | | 50 | 14·98 | 52 | 549·1 | 53 | 844·0 | | | | | 19 | 538·4 | | | | | 50 | 16·10 |
| | | 55 | 15·91 | 57 | 537·5 | 58 | 836·8 | | | 20 | 26·45 | | | | | | | 55 | 14·80 |
| 30 | 4 | 0 | 16·97 | 2 | 531·7 | 3 | 825·7 | | | 21 | 27·26 | 22 | 527·1 | 23 | 638·8 | 30 | 12 | 0 | 14·87 |
| | | 5 | 19·29 | 7 | 529·6 | 8 | 819·4 | | | | | 24 | 521·5 | | | | | 5 | 16·15 |
| | | 10 | 20·22 | 12 | 525·8 | 13 | 813·2 | | | 25 | 29·34 | 27 | 496·7 | 28 | 634·2 | | | 10 | 17·13 |
| | | 15 | 20·55 | 17 | 518·7 | 18 | 804·5 | | | 30 | 17·80 | 30 | 468·5 | | | | | 20 | 17·89 |
| | | 20 | 22·72 | 22 | 521·7 | 23 | 792·2 | | | 31 | 25 08·41 | 31 | 469·2 | | | | | 35 | 17·73 |
| | | 25 | 23·05 | 27 | 521·3 | 28 | 782·6 | | | | | 32 | 474·9 | | | | | | |
| | | 30 | 24·35 | 32 | 520·3 | 33 | 773·7 | | | 33 | 24 55·49 | 33 | 483·8 | 33 | 665·6 | 30 | 21 | 50 | 25 19·64 |
| | | 40 | 24·19 | 42 | 513·9 | 43 | 760·3 | | | 34 | 50·93 | 34 | 494·1 | | | | | | |
| | | 50 | 25·40 | 52 | 519·7 | 53 | 750·0 | | | 35 | 48·97 | 35 | 505·6 | 35 | 661·2 | 30 | 23 | 30 | 25 23·81 |
| 30 | 5 | 0 | 24·66 | 2 | 517·9 | 3 | 756·8 | | | 36 | 47·84 | 36 | 516·6 | 36 | 655·7 | | | | |
| | | 15 | 26·01 | 17 | 530·6 | 18 | 759·1 | | | 37 | 47·51 | 37 | 525·8 | 37 | 651·0 | 31 | 2 | 5 | 25 24·48 |
| | | 20 | 26·20 | 22 | 536·5 | 23 | 767·1 | | | 38 | 48·28 | 38 | 531·9 | 38 | 646·5 | | | 55 | 23·41 |
| | | 25 | 24·59 | 27 | 533·6 | 28 | 776·8 | | | 39 | 49·41 | 39 | 536·1 | 39 | 644·1 | | | | |
| | | 30 | 24·55 | 32 | 526·7 | 33 | 793·9 | | | 40 | 50·93 | 40 | 540·1 | 40 | 643·1 | 31 | 13 | 0 | 25 21·88 |
| | | 35 | 23·73 | 37 | 514·0 | 38 | 809·0 | | | 41 | 52·67 | 41 | 543·0 | 41 | 642·7 | | | 5 | 20·25 |
| | | 40 | 19·86 | 42 | 507·3 | 43 | 826·0 | | | 42 | 54·39 | 42 | 545·5 | 42 | 644·6 | | | 10 | 19·49 |
| | | 45 | 17·12 | 47 | 509·4 | 48 | 840·4 | | | 43 | 55·84 | 43 | 547·0 | 43 | 644·4 | | | 15 | 19·02 |
| | | 50 | 09·54 | | | | | | | 44 | 56·87 | 44 | 547·8 | | | | | 25 | 18·90 |
| | | 51 | 25 07·00 | 52 | 495·5 | 53 | 859·6 | | | 45 | 57·96 | 45 | 547·3 | 45 | 644·5 | | | 35 | 17·63 |
| | | | | 54 | 501·4 | | | | | 46 | 58·96 | 46 | 545·3 | | | | | 40 | 16·63 |
| | | 55 | 24 57·32 | | | | | | | 47 | 59·32 | | | | | 31 | 14 | 0 | 17·98 |
| | | 56 | 24 55·20 | 57 | 515·0 | 58 | 858·8 | | | 48 | 24 59·88 | 48 | 541·2 | 48 | 651·8 | | | 25 | 17·00 |
| | | | | 59 | 523·9 | | | | | 49 | 25 00·18 | | | | | 31 | 15 | 0 | 16·75 |
| 30 | 6 | 0 | 24 51·16 | | | | | | | 50 | 00·37 | | | 50 | 653·0 | | | 35 | 16·46 |
| | | 1 | 24 51·05 | 2 | 530·1 | 3 | 848·3 | | | 51 | 00·84 | 52 | 535·5 | 53 | 655·5 | 31 | 16 | 0 | 16·26 |
| | | | | 4 | 534·8 | | | | | 55 | 03·13 | 57 | 534·3 | 58 | 660·0 | | | 35 | 17·60 |
| | | 5 | 24 52·75 | 7 | 542·9 | 8 | 843·6 | | | 59 | 05·13 | | | | | 31 | 17 | 0 | 17·54 |
| | | 10 | 24 55·83 | 12 | 549·8 | 13 | 842·3 | 30 | 9 | | | 2 | 532·9 | 3 | 660·1 | | | 55 | 22·33 |
| | | 15 | 24 59·95 | 17 | 544·4 | 18 | 843·4 | | | 5 | 10·67 | 7 | 526·1 | | | 31 | 18 | 0 | 22·87 |
| | | 20 | 25 00·98 | 22 | 539·4 | 23 | 840·1 | | | 10 | 12·45 | 12 | 506·0 | 13 | 671·0 | | | 5 | 23·22 |
| | | 25 | 25 02·50 | 27 | 537·5 | 28 | 836·2 | | | | | 14 | 503·8 | | | | | 10 | 23·48 |
| | | 30 | 25 02·15 | 32 | 527·0 | 33 | 832·9 | | | 15 | 08·58 | 17 | 506·0 | 18 | 674·8 | | | 15 | 23·88 |
| | | 35 | 24 58·13 | 37 | 534·8 | 38 | 823·0 | | | 20 | 05·82 | 22 | 507·4 | 23 | 675·1 | | | 20 | 23·24 |
| | | 40 | 24 58·80 | 42 | 537·9 | 43 | 819·4 | | | 25 | 04·64 | 27 | 510·8 | 28 | 676·3 | | | 25 | 22·62 |
| | | 45 | 25 01·11 | 47 | 533·9 | 48 | 816·7 | | | 30 | 04·34 | 32 | 511·7 | 33 | 673·2 | | | 30 | 22·74 |
| | | 50 | 02·99 | 52 | 523·4 | 53 | 816·9 | | | 35 | 05·74 | 37 | 517·9 | 38 | 666·1 | | | 35 | 22·58 |
| | | 55 | 02.93 | 57 | 522·5 | 58 | 814·1 | | | 40 | 07·78 | 42 | 521·3 | 43 | 664·9 | 31 | 19 | 0 | 19·55 |

BIFILAR. $k$=0·000140. BALANCE. $k$=0·0000085.

March 30$^d$ 5$^h$ 54$^m$. The vibrations of the bifilar seem to be sometimes suddenly checked.

March 30$^d$ 8$^h$ 30$^m$—37$^m$. The declination has been steadily diminishing. 8$^h$ 41$^m$. The bifilar readings have been steadily increasing since 30$^m$, never having gone back a tenth of a division; the bifilar attained its maximum about 44½$^m$.

| Bifilar Corrected. | | Balance Corrected. | | Gött. Mean Time. | | Declination. | | Bifilar Corrected. | | Balance Corrected. | | Gött. Mean Time. | | Declination. | | Bifilar Corrected. | | Balance Corrected. | |
|---|---|---|---|---|---|---|---|---|---|---|---|---|---|---|---|---|---|---|---|
| Min. | Sc. Div. | Min. | Mic. Div. | d. | h. | Min. | ° ′ | Min. | Sc. Div. | Min. | Mic. Div. | d. | h. | Min. | ° ′ | Min. | Sc. Div. | Min. | Mic. Div. |
| 47 | 514·3 | 48 | 664·5 | 31 | 19 | 5 | 25 20·53 | 7 | 523·8 | 8 | 669·7 | 1 | 9 | 45 | 25 22·08 | 47 | 524·5 | 48 | 673·3 |
| 52 | 510·4 | 53 | 664·5 | | | 10 | 19·73 | 12 | 521·0 | 13 | 672·6 | | | 50 | 20·43 | 52 | 522 6 | 53 | 675·2 |
| 57 | 509·1 | 58 | 665·0 | | | 15 | 18·50 | 17 | 519·4 | 18 | 676·3 | | | 55 | 20·82 | 57 | 516·2 | 58 | 683·0 |
| 2 | 507·5 | 3 | 664·2 | | | 20 | 18·84 | 22 | 517·6 | 23 | 682·0 | 1 | 10 | 0 | 19·55 | 2 | 501·0 | 3 | 692·9 |
| 7 | 508·7 | 8 | 658·2 | | | 25 | 21·32 | 27 | 515·5 | 28 | 687·1 | | | 5 | 14·03 | 7 | 502·9 | 8 | 701·7 |
| 12 | 530·3 | 13 | 644·3 | | | 30 | 20·80 | 32 | 512·2 | 33 | 690·9 | | | 10 | 09·06 | 12 | 512·4 | 13 | 705·8 |
| 17 | 538·8 | 18 | 630·3 | | | 35 | 18·90 | 37 | 513·3 | 38 | 693·8 | | | 15 | 08·16 | 17 | 515·7 | 18 | 706·5 |
| 22 | 536·1 | 23 | 619·5 | | | 40 | 18·30 | 42 | 513·3 | 43 | 695·6 | | | 20 | 08·14 | 22 | 517·9 | 23 | 707·8 |
| 27 | 522·0 | 28 | 614·5 | | | 45 | 18·65 | 47 | 512·6 | 48 | 699·4 | | | 25 | 09·46 | 27 | 518·9 | 28 | 710·6 |
| 32 | 510·2 | 33 | 603·7 | 31 | 20 | 0 | 17·10 | 2 | 514·6 | 3 | 706·3 | | | 30 | 11·48 | 32 | 518·7 | | |
| 37 | 506·1 | 38 | 589·6 | | | | | | | | | | | 40 | 14·10 | 42 | 512·1 | 43 | 709·0 |
| 42 | 507·2 | 43 | 581·2 | 1 | 3 | 0 | 25 17·81 | 2 | 511·5 | 3 | 788·0 | 1 | 11 | 0 | 12·67 | 2 | 516·0 | 3 | 710·7 |
| 47 | 507·1 | 48 | 575·9 | | | 35 | 19·48 | 37 | 523·7 | 38 | 792·0 | | | 20 | 11·61 | 22 | 519·5 | 23 | 717·8 |
| 52 | 509·2 | 53 | 575·1 | 1 | 4 | 0 | 21·81 | 2 | 516·8 | 3 | 785·4 | | | 30 | 12·72 | 32 | 518·8 | 33 | 717·9 |
| 57 | 516·1 | 58 | 576·2 | | | 30 | 22·28 | 32 | 524·9 | 33 | 766·6 | | | 40 | 13·91 | 42 | 513·7 | 43 | 713·5 |
| 2 | 518·3 | 3 | 576·0 | | | 35 | 21·39 | 37 | 520·1 | 38 | 766·8 | 1 | 12 | 0 | 15·76 | 2 | 514·6 | 3 | 710·6 |
| 7 | 523·2 | 8 | 581·8 | | | 40 | 20·85 | 42 | 521·9 | 43 | 767·5 | | | 45 | 19·64 | 47 | 519·4 | 48 | 671·5 |
| 12 | 522·8 | 13 | 586·1 | | | 55 | 17·40 | 57 | 516·5 | 58 | 777·1 | 1 | 13 | 0 | 18·84 | 2 | 520·4 | 3 | 671·9 |
| 22 | 518·3 | 23 | 604·6 | 1 | 5 | 0 | 15·04 | 2 | 516·1 | 3 | 780·3 | 1 | 14 | 0 | 17·20 | 2 | 516·2 | 3 | 673·0 |
| 27 | 522·6 | 28 | 609·4 | | | 5 | 13·09 | 7 | 521·4 | 8 | 782·8 | 1 | 15 | 0 | 21·50 | 2 | 507·5 | 3 | 594·9 |
| 32 | 527·5 | 33 | 615·0 | | | 10 | 12·26 | 12 | 527·0 | 13 | 785·8 | | | 10 | 17·09 | 12 | 508·9 | 13 | 591·4 |
| 37 | 528·2 | 38 | 622·5 | | | 15 | 12·70 | 17 | 528·4 | 18 | 790·7 | | | 15 | 16·72 | 17 | 510·6 | 18 | 598·7 |
| 52 | 518·9 | 53 | 640·5 | | | 25 | 11·35 | 27 | 523·8 | 28 | 799·3 | | | 20 | 15·44 | 22 | 511·4 | 23 | 608·5 |
| 57 | 521·0 | 58 | 644·3 | | | 30 | 11·37 | 32 | 523·4 | 33 | 800·9 | | | 25 | 14·01 | 27 | 512·4 | 28 | 611·2 |
| 2 | 520·8 | 3 | 651·6 | | | 40 | 09·37 | 42 | 535·0 | 43 | 798·7 | | | 30 | 14·15 | 32 | 511·2 | 33 | 621·4 |
| 7 | 520·1 | 8 | 656·4 | | | 45 | 11·12 | 47 | 532·2 | 48 | 804·1 | | | 35 | 13·19 | 37 | 511·7 | 38 | 630·3 |
| 12 | 518·7 | 13 | 660·7 | | | 50 | 11·49 | 52 | 530·1 | 53 | 808·0 | | | 40 | 12·78 | 42 | 512·9 | 43 | 640·8 |
| 22 | 518·2 | 23 | 668·2 | | | 55 | 11·24 | 57 | 529·7 | | | | | 45 | 12·80 | 47 | 514·9 | 48 | 644·6 |
| 37 | 518·6 | 38 | 679·3 | 1 | 6 | 0 | 12·87 | 2 | 529·6 | 3 | 810·9 | | | 50 | 13·43 | 52 | 515·0 | 53 | 646·4 |
| | | | | | | 10 | 14·13 | 12 | 526·6 | 13 | 815·0 | | | 55 | 12·98 | 57 | 515·6 | | |
| 52 | 505·0 | 53 | 717·8 | | | 20 | 17·36 | 22 | 525·0 | 23 | 816·8 | 1 | 16 | 0 | 13·46 | 2 | 516·5 | 3 | 649·9 |
| | | | | | | 25 | 16·79 | 27 | 522·2 | 28 | 813·8 | | | 30 | 15·98 | 32 | 517·0 | 33 | 661·0 |
| 32 | 498·9 | 33 | 756·3 | | | 30 | 16·79 | 32 | 523·3 | | | 1 | 17 | 0 | 16·39 | 2 | 514·5 | 3 | 663·7 |
| | | | | | | 40 | 16·72 | 42 | 514·2 | 43 | 813·9 | 1 | 20 | 0 | 18·23 | 2 | 508·8 | 3 | 697·9 |
| 7 | 511·5 | 8 | 748·0 | | | 45 | 16·01 | 47 | 517·7 | 48 | 811·0 | | | 20 | 18·87 | 22 | 508·2 | 23 | 701·8 |
| 57 | 516·0 | 58 | 742·8 | | | 50 | 16·66 | 52 | 518·6 | | | 1 | 21 | 0 | 20·11 | 2 | 507·6 | 3 | 706·5 |
| | | | | 1 | 7 | 0 | 16·35 | 2 | 520·9 | 3 | 805·9 | 1 | 22 | 0 | 21·23 | 2 | 494·6 | 3 | 726·8 |
| 2 | 514·6 | 3 | 609·9 | | | 15 | 18·10 | 17 | 521·3 | 18 | 802·7 | | | 15 | 22·20 | 17 | 495·3 | 18 | 729·4 |
| 7 | 519·4 | 8 | 617·0 | | | 55 | 18·16 | 57 | 523·7 | | | | | 31 | 22·15 | 32 | 500·9 | 33 | 724·6 |
| 12 | 522·9 | 13 | 624·6 | 1 | 8 | 0 | 19·19 | 2 | 526·2 | 3 | 781·5 | | | 45 | 22·58 | 47 | 501·4 | 48 | 724·9 |
| 17 | 523·1 | 18 | 631·2 | | | 10 | 17·56 | 12 | 527·6 | 13 | 779·7 | 1 | 23 | 0 | 23·76 | 2 | 500·8 | 3 | 724·1 |
| 27 | 519·9 | 28 | 644·6 | | | 15 | 18·84 | 17 | 525·9 | 18 | 778·6 | 2 | 0 | 0 | 24·84 | 2 | 506·9 | 3 | 725·5 |
| 37 | 515·5 | 38 | 657·2 | | | 20 | 16·72 | 22 | 524·4 | | | 2 | 1 | 0 | 25·58 | 2 | 513·7 | 3 | 728·9 |
| 42 | 516·3 | 43 | 663·9 | | | 25 | 15·71 | 27 | 521·8 | 28 | 777·2 | | | 16 | 27·07 | 17 | 518·8 | 18 | 732·2 |
| 2 | 515·9 | 3 | 684·3 | | | 30 | 14·20 | 32 | 520·1 | | | 2 | 2 | 0 | 26·35 | 2 | 519·7 | 3 | 738·0 |
| 27 | 516·2 | 28 | 705·9 | | | 35 | 12·55 | | | | | 2 | 3 | 0 | 27·44 | 2 | 530·2 | 3 | 750·7 |
| 2 | 516·1 | 3 | 719·4 | | | 40 | 12·65 | 42 | 521·2 | 43 | 779·0 | | | 15 | 27·28 | 17 | 521·7 | 18 | 758·2 |
| 37 | 516·7 | 38 | 727·1 | | | 45 | 13·52 | 47 | 518·2 | 48 | 780·7 | 2 | 4 | 0 | 23·43 | 2 | 518·4 | 3 | 767·9 |
| 2 | 514·7 | 3 | 724·4 | | | 50 | 12·85 | 52 | 514·6 | 53 | 781·7 | 2 | 6 | 0 | 18·85 | 2 | 503·8 | 3 | 824·7 |
| 37 | 512·5 | 38 | 729·0 | | | 55 | 12·42 | 57 | 516·0 | | | | | 10 | 12·87 | 12 | 507·1 | 13 | 827·8 |
| 2 | 514·5 | 3 | 716·8 | 1 | 9 | 0 | 12·92 | 2 | 514·1 | 3 | 782·0 | | | 15 | 11·48 | 17 | 513·8 | 18 | 825·8 |
| 57 | 501·5 | 58 | 679·6 | | | 15 | 19·39 | 17 | 532·6 | 18 | 740·8 | | | 20 | 09·40 | 22 | 519·9 | 23 | 823·1 |
| 2 | 503·3 | 3 | 675·1 | | | 19 | 15·45 | | | | | | | 25 | 07·98 | 27 | 534·8 | 28 | 819·1 |
| 7 | 506·2 | 8 | 670·0 | | | 20 | 12·51 | | | | | | | 30 | 09·20 | 32 | 539·6 | 33 | 819·2 |
| 12 | 506·5 | 13 | 667·4 | | | 21 | 10·27 | 22 | 536·9 | 23 | 711·7 | | | 35 | 10·51 | 37 | 537·9 | 38 | 819·8 |
| 17 | 510·5 | 18 | 665·1 | | | 25 | 11·64 | | | | | | | 40 | 12·11 | 42 | 534·9 | 43 | 815·9 |
| 22 | 512·0 | 23 | 664·6 | | | 26 | 12·72 | 27 | 548·4 | 28 | 691·1 | | | 45 | 13·90 | 47 | 530·4 | 48 | 813·0 |
| 27 | 513·1 | 28 | 665·7 | | | | | 29 | 546·6 | | | | | 50 | 15·81 | 52 | 527·7 | 53 | 806·7 |
| 32 | 513·9 | 33 | 666·1 | | | 30 | 17·04 | 32 | 540·7 | 33 | 680·0 | | | 55 | 17·27 | 57 | 525·4 | 58 | 801·9 |
| 37 | 514·3 | 38 | 666·3 | | | 35 | 20·69 | 37 | 529·8 | 38 | 675·5 | 2 | 7 | 0 | 18·25 | 2 | 526·4 | 3 | 796·4 |
| 2 | 524·5 | 3 | 666·4 | | | 40 | 23·34 | 42 | 522·4 | 43 | 673·5 | | | 5 | 19·51 | 7 | 523·6 | 8 | 789·5 |

BIFILAR. $k=0{\cdot}000140$. BALANCE. $k=0{\cdot}0000085$.

April 1d 9h 20m. The declination magnet vibrating 5′ – 6′.

| Gött. Mean Time. | Declination. | | Bifilar Corrected. | | Balance Corrected. | |
|---|---|---|---|---|---|---|
| d. h. | Min. | ° ′ | Min. | Sc. Div. | Min. | Mic. Div. |
| 2 7 | 10 | 25 19·88 | 12 | 524·9 | 13 | 786·1 |
| 2 8 | 0 | 16·08 | 2 | 520·7 | 3 | 792·7 |
| | 10 | 12·58 | 12 | 517·4 | 13 | 790·2 |
| | 20 | 07·02 | 22 | 519·0 | 23 | 785·0 |
| | 25 | 06·83 | 27 | 521·5 | 28 | 781·6 |
| | 30 | 09·20 | 32 | 517·6 | 33 | 782·5 |
| | 40 | 11·95 | 42 | 512·8 | 43 | 784·3 |
| | 50 | 15·47 | 52 | 510·8 | | |
| | 55 | 18·50 | | | | |
| | 56 | 24·39 | 57 | 520·1 | 58 | 766·6 |
| | | | 59 | 516·2 | | |
| 2 9 | 0 | 29·68 | | | | |
| | 1 | 29·97 | 2 | 515·6 | 3 | 742·9 |
| | | | 4 | 516·7 | | |
| | 5 | 26·81 | | | | |
| | 6 | 26·82 | 7 | 519·4 | 8 | 712·8 |
| | | | 9 | 518·3 | | |
| | 10 | 26·92 | 12 | 515·6 | 13 | 690·0 |
| | 15 | 26·14 | 17 | 514·0 | 18 | 687·1 |
| | 20 | 22·84 | 22 | 509·5 | 23 | 682·5 |
| | 25 | 18·77 | 27 | 517·2 | 28 | 703·5 |
| | 30 | 16·08 | 32 | 521·2 | 33 | 713·4 |
| | 35 | 15·71 | 37 | 521·6 | 38 | 720·9 |
| | 40 | 15·29 | 42 | 521·6 | 43 | 727·1 |
| | 45 | 15·45 | 47 | 518·4 | 48 | 731·4 |
| | 50 | 14·21 | 52 | 518·4 | 53 | 735·7 |
| | 55 | 13·43 | 57 | 521·9 | 58 | 735·7 |
| 2 10 | 0 | 13·96 | 2 | 523·3 | 3 | 743·9 |
| | 10 | 16·08 | 12 | 522·3 | 13 | 748·1 |
| | 20 | 16·82 | 25 | 520·7 | 27 | 751·4 |
| | 40 | 17·70 | 42 | 520·4 | 43 | 753·5 |
| 2 11 | 0 | 16·35 | 2 | 524·0 | 3 | 747·5 |
| | 15 | 16·48 | 17 | 520·5 | 18 | 745·5 |
| 2 12 | 0 | 18·40 | 2 | 520·9 | 3 | 744·7 |
| 2 16 | 0 | 21·29 | 2 | 509·5 | 3 | 728·1 |
| | 5 | 21·97 | 7 | 511·2 | 8 | 725·2 |
| | 15 | 22·89 | 17 | 514·4 | 18 | 711·2 |
| | 20 | 23·16 | 22 | 515·0 | 23 | 706·3 |
| | 25 | 23·29 | | | | |
| | 40 | 21·19 | 42 | 512·9 | 43 | 682·1 |
| | 45 | 19·71 | 47 | 513·9 | 48 | 681·4 |
| | 55 | 18·45 | 57 | 515·6 | 58 | 681·2 |
| 2 17 | 0 | 17·85 | 2 | 519·7 | 3 | 680·1 |
| | 5 | 17·76 | 7 | 520·8 | 8 | 682·9 |
| | 10 | 18·00 | | | | |
| | 55 | 11·88 | 57 | 516·0 | 58 | 698·8 |
| 2 18 | 0 | 12·38 | 2 | 515·3 | 3 | 702·5 |
| | 5 | 13·12 | 7 | 513·3 | 8 | 706·7 |
| | 10 | 14·28 | 12 | 513·0 | 13 | 709·1 |
| | 15 | 15·05 | 17 | 513·1 | 18 | 711·7 |
| | 20 | 15·54 | | | | |
| 2 19 | 0 | 14·85 | 2 | 517·5 | 3 | 721·3 |
| 2 21 | 0 | 19·88 | 2 | 492·1 | 3 | 746·7 |
| | 10 | 22·20 | 12 | 487·9 | 13 | 750·3 |
| | 15 | 23·61 | 17 | 483·7 | 18 | 755·6 |
| | 20 | 24·55 | 22 | 480·5 | 23 | 755·9 |
| | 25 | 22·10 | 27 | 487·6 | 28 | 752·9 |
| | 30 | 22·00 | 32 | 494·1 | 33 | 748·5 |
| | 35 | 23·14 | 37 | 496·9 | 38 | 746·6 |
| | 45 | 25·83 | 47 | 491·5 | 48 | 746·2 |
| 2 22 | 0 | 27·05 | 2 | 490·8 | 3 | 746·2 |

| Gött. Mean Time. | Declination. | | Bifilar Corrected. | | Balance Corrected. | |
|---|---|---|---|---|---|---|
| d. h. | Min. | ° ′ | Min. | Sc. Div. | Min. | Mic. Div. |
| 2 22 | 15 | 25 26·50 | 17 | 488·3 | 18 | 749·2 |
| | 25 | 27·75 | 27 | 491·1 | 28 | 749·3 |
| | 40 | 24·13 | 42 | 501·6 | 43 | 740·9 |
| | 50 | 26·37 | 52 | 498·7 | 53 | 743·5 |
| 2 23 | 0 | 24·13 | 2 | 503·9 | 3 | 743·0 |
| | 20 | 23·99 | 22 | 515·1 | 23 | 746·0 |
| 3 0 | 0 | 20·94 | 2 | 520·1 | 3 | 738·7 |
| 3 5 | 0 | 25 23·51 | 2 | 527·6 | 3 | 827·7 |
| | 5 | 24·35 | 7 | 526·7 | 8 | 832·9 |
| | 10 | 25·44 | 12 | 525·4 | 13 | 843·2 |
| | 15 | 23·72 | 17 | 525·7 | 18 | 857·1 |
| | 20 | 22·22 | 22 | 517·8 | 23 | 874·9 |
| | 25 | 16·99 | 27 | 521·4 | 28 | 873·9 |
| | 30 | 18·01 | 32 | 523·8 | 33 | 870·3 |
| | 35 | 17·94 | 37 | 518·2 | 38 | 873·7 |
| | 40 | 15·78 | 42 | 519·5 | 43 | 875·7 |
| | 45 | 16·72 | 47 | 527·1 | 48 | 888·5 |
| | 50 | 04·64 | 52 | 544·6 | 53 | 909·2 |
| | 51 | 25 02·77 | 54 | 554·8 | | |
| | 55 | 24 58·74 | | | | |
| | 56 | 25 00·08 | 57 | 568·6 | 58 | 864·5 |
| 3 6 | 0 | 12·35 | 0 | 559·1 | | |
| | 1 | 13·76 | 1 | 554·2 | | |
| | | | 2 | 550·4 | 3 | 851·1 |
| | 5 | 17·02 | 7 | 537·5 | 8 | 846·9 |
| | 10 | 20·16 | 12 | 525·1 | 13 | 847·8 |
| | 15 | 21·26 | 17 | 517·0 | 18 | 850·5 |
| | 20 | 20·25 | 22 | 508·0 | 23 | 861·5 |
| | 25 | 12·33 | 27 | 520·3 | 28 | 855·5 |
| | 30 | 10·38 | 32 | 530·0 | 33 | 849·9 |
| | 35 | 11·71 | 37 | 520·9 | 38 | 857·1 |
| | 40 | 25 05·43 | | | | |
| | 42 | 24 58·36 | 42 | 519·6 | | |
| | | | 43 | 527·5 | 43 | 856·2 |
| | 44 | 24 57·64 | 44 | 535·5 | | |
| | 45 | 24 58·15 | 45 | 542·7 | | |
| | 46 | 25 00·06 | 46 | 547·9 | | |
| | 47 | 02·45 | | | 47 | 836·5 |
| | 48 | 05·38 | 48 | 551·6 | | |
| | 49 | 07·40 | 49 | 555·6 | | |
| | 50 | 09·73 | 50 | 552·5 | | |
| | | | 51 | 549·7 | 51 | 829·8 |
| | 52 | 12·06 | 52 | 546·8 | | |
| | | | 53 | 542·2 | 53 | 826·3 |
| | | | 54 | 538·1 | | |
| | 55 | 13·23 | 55 | 535·7 | | |
| | | | 56 | 533·2 | | |
| | | | 57 | 530·4 | 58 | 820·9 |
| 3 7 | 0 | 13·66 | 2 | 511·4 | 3 | 818·6 |
| | 5 | 06·90 | 7 | 514·4 | 8 | 809·9 |
| | 10 | 03·16 | 12 | 524·5 | 13 | 799·1 |
| | 15 | 04·15 | 17 | 523·5 | 18 | 796·5 |
| | 20 | 03·55 | 22 | 523·7 | 23 | 792·6 |
| | 25 | 04·41 | | | | |
| | 30 | 05·38 | 32 | 527·4 | 33 | 791·6 |
| | 35 | 09·15 | 37 | 521·9 | 38 | 793·5 |
| | 40 | 11·17 | 42 | 514·6 | 43 | 794·3 |
| | 45 | 11·37 | 47 | 515·1 | 48 | 792·7 |
| | 50 | 12·48 | 52 | 514·2 | 53 | 791·5 |
| | 55 | 13·72 | 57 | 512·1 | 58 | 788·8 |

| Gött. Mean Time. | Declination. | |
|---|---|---|
| d. h. | Min. | ° ′ |
| 3 8 | 0 | 25 14·23 |
| | 5 | 16·82 |
| | 10 | 18·03 |
| | 15 | 18·20 |
| | 30 | 18·81 |
| 3 9 | 0 | 17·53 |
| 3 12 | 0 | 13·63 |
| | 15 | 16·75 |
| | 25 | 18·16 |
| | 35 | 18·97 |
| | 45 | 19·78 |
| 3 13 | 0 | 17·63 |
| 3 15 | 0 | 21·06 |
| | 20 | 20·42 |
| 3 16 | 0 | 24·25 |
| | 5 | 24·26 |
| | 10 | 23·12 |
| | 15 | 22·08 |
| | 30 | 18·85 |
| | 35 | 18·27 |
| | 45 | 15·91 |
| 3 17 | 0 | 13·94 |
| | 25 | 14·11 |
| 3 18 | 0 | 14·46 |
| 4 7 | 0 | 25 17·63 |
| | 15 | 09·47 |
| | 20 | 10·68 |
| | 30 | 11·17 |
| 4 8 | 0 | 14·60 |
| 4 10 | 0 | 15·34 |
| | 10 | 18·21 |
| | 20 | 15·61 |
| 4 11 | 0 | 14·13 |
| | 30 | 15·69 |
| 4 12 | 0 | 14·58 |
| 4 16 | 0 | 11·39 |
| | 10 | 11·30 |
| | 20 | 11·77 |
| 4 17 | 0 | 12·92 |
| 5 12* | 0 | 25 13·16 |
| | 5 | 10·03 |
| | 10 | 08·88 |
| | 15 | 09·35 |
| | 20 | 08·01 |
| | 25 | 06·83 |
| | 30 | 07·35 |
| | 35 | 08·01 |
| | 40 | 13·56 |
| | 45 | 30·60 |
| | 46 | 32·32 |
| | 50 | 37·17 |
| | 51 | 37·91 |
| | 55 | 36·09 |
| | 56 | 35·45 |

BIFILAR. $k$=0·000140. BALANCE. $k$=0·0000085.

April 2d 8h 55m. The declination magnet vibrating 12′, and the bifilar 30 divisions.

April 5d 12h 40m. The declination magnet vibrating 4′, and the bifilar 10 divisions. 12h 45m. The declination steadily increasing, the bifilar being very steady.

* See notes on the Aurora Borealis, *after* the *Extra Observations of Magnetometers*.

| Bifilar Corrected. | | Balance Corrected. | | Gött. Mean Time. | Declination. | | Bifilar Corrected. | | Balance Corrected. | | Gött. Mean Time. | Declination. | | Bifilar Corrected. | | Balance Corrected. | |
|---|---|---|---|---|---|---|---|---|---|---|---|---|---|---|---|---|---|
| Min. | Sc. Div. | Min. | Mic. Div. | d. h. | Min. | ° ′ | Min. | Sc. Div. | Min. | Mic. Div | d. h. | Min. | ° ′ | Min. | Sc. Div. | Min. | Mic. Div. |
| 2 | 515·3 | 3 | 784·0 | 5 13 | 0 | 25 34·12 | | | | | 8 8 | 0 | 25 13·46 | 2 | 525·9 | 3 | 744·7 |
| 7 | 514·1 | 8 | 782·0 | * | 1 | 34·01 | 2 | 517·2 | 3 | 583·9 | | 10 | 11·77 | 12 | 529·3 | 13 | 747·3 |
| 12 | 513·2 | 13 | 778·2 | | 5 | 32·24 | 7 | 513·2 | 8 | 556·1 | | 15 | 11·66 | 17 | 531·3 | 18 | 751·3 |
| 17 | 511·6 | 18 | 780·2 | | 10 | 31·19 | 12 | 509·3 | 13 | 549·4 | | 20 | 12·13 | 22 | 531·2 | | |
| 32 | 517·5 | 33 | 768·1 | | 15 | 28·92 | 17 | 508·0 | 18 | 555·6 | | 30 | 13·54 | 32 | 527·3 | 33 | 750·5 |
| 2 | 519·3 | 3 | 757·1 | | 20 | 26·01 | 22 | 515·7 | 23 | 572·8 | 8 9 | 0 | 15·07 | 2 | 526·0 | 3 | 751·1 |
| 2 | 513·0 | 3 | 713·7 | | 25 | 23·63 | 27 | 513·2 | 28 | 589·4 | 8 10 | 0 | 13·59 | 2 | 524·0 | 3 | 749·0 |
| 17 | 513·1 | 18 | 718·4 | | 30 | 19·71 | 32 | 513·8 | 33 | 604·3 | | 20 | 15·45 | 22 | 525·8 | 23 | 740·6 |
| 27 | 514·3 | 28 | 716·5 | | 35 | 16·84 | 37 | 513·2 | 38 | 613·5 | 8 11 | 0 | 16·28 | 2 | 522·2 | 3 | 744·7 |
| 37 | 519·9 | 38 | 714·1 | * | 40 | 14·75 | 42 | 513·7 | 43 | 624·3 | | | | | | | |
| 47 | 519·8 | 48 | 713·1 | | 45 | 12·78 | 47 | 515·3 | 48 | 637·9 | 9 2 | 0 | 25 24·10 | 2 | 518·1 | 3 | 725·7 |
| 2 | 517·7 | 3 | 713·5 | | 50 | 10·20 | 52 | 520·3 | 53 | 651·3 | | 5 | 20·83 | 7 | 523·6 | 8 | 728·8 |
| 2 | 514·1 | 3 | 716·3 | | 55 | 09·13 | 57 | 524·9 | 58 | 661·0 | | 10 | 19·93 | 12 | 523·9 | 13 | 728·2 |
| 22 | 516·5 | 23 | 696·5 | 5 14 | 0 | 10·28 | 2 | 525·0 | 3 | 667·4 | | 15 | 19·01 | 17 | 524·2 | 18 | 728·8 |
| 2 | 510·6 | 3 | 676·2 | | 5 | 10·60 | 7 | 526·3 | 8 | 672·9 | | 20 | 18·30 | | | | |
| 7 | 512·4 | 8 | 670·3 | | 10 | 11·77 | 12 | 527·1 | 13 | 672·7 | 9 3 | 0 | 22·87 | 2 | 518·3 | 3 | 731·1 |
| 12 | 513·7 | 13 | 663·1 | | | | 37 | 521·0 | 38 | 663·6 | | | | | | | |
| 17 | 513·6 | 18 | 657·7 | | 40 | 10·85 | 42 | 519·9 | 43 | 658·5 | 10 13 | 0 | 25 08·63 | 2 | 526·9 | 3 | 703·2 |
| 32 | 512·8 | 33 | 656·0 | | 45 | 09·87 | 47 | 518·9 | 48 | 657·2 | | 5 | 08·41 | 7 | 525·1 | 8 | 705·3 |
| 37 | 513·7 | | | | 50 | 09·44 | 52 | 517·7 | 53 | 654·3 | | 10 | 08·45 | 12 | 524·0 | 13 | 707·7 |
| 47 | 516·6 | 48 | 658·9 | | 55 | 09·02 | 57 | 519·6 | 58 | 649·8 | | 15 | 09·29 | 17 | 521·6 | 18 | 700·8 |
| 2 | 517·0 | 3 | 665·2 | 5 15 | 0 | 10·07 | 2 | 518·0 | 3 | 646·9 | | 20 | 09·79 | 22 | 520·6 | 23 | 704·3 |
| 27 | 518·7 | 28 | 677·6 | | 5 | 10·81 | 7 | 516·0 | 8 | 640·6 | | 25 | 10·23 | 27 | 519·7 | 28 | 714·4 |
| 2 | 518·1 | 3 | 691·8 | | 10 | 11·46 | 12 | 516·4 | 13 | 634·6 | | 30 | 10·78 | 32 | 520·6 | 33 | 716·6 |
| | | | | | 15 | 11·46 | 17 | 513·8 | 18 | 624·8 | | 35 | 11·77 | 37 | 521·3 | 38 | 718·3 |
| 2 | 517·0 | 3 | 776·8 | | 20 | 10·48 | 22 | 511·8 | 23 | 612·3 | | 40 | 12·46 | 42 | 521·3 | 43 | 718·3 |
| 17 | 529·5 | 18 | 775·7 | | 25 | 09·03 | 27 | 510·4 | 28 | 603·7 | | 45 | 12·73 | 47 | 521·3 | | |
| 22 | 529·3 | 23 | 779·5 | | 30 | 07·20 | 32 | 513·7 | 33 | 599·2 | | 50 | 13·44 | 52 | 521·1 | 53 | 724·8 |
| 32 | 527·2 | | | | 35 | 05·38 | 37 | 511·9 | 38 | 597·6 | | 55 | 13·97 | 57 | 521·1 | 58 | 725·8 |
| 2 | 524·2 | 3 | 773·5 | | 40 | 03·60 | 42 | 507·2 | 43 | 598·3 | 10 14 | 0 | 14·73 | 2 | 520·3 | 3 | 726·9 |
| 2 | 524·7 | 3 | 757·7 | | 45 | 04·15 | 47 | 511·8 | 48 | 595·6 | | 10 | 15·31 | 12 | 522·9 | 13 | 725·6 |
| 12 | 519·0 | 13 | 756·2 | | 50 | 05·40 | 52 | 499·8 | 53 | 590·6 | | 30 | 14·73 | 32 | 521·5 | 33 | 729·0 |
| 22 | 519·2 | 23 | 754·0 | | 55 | 07·94 | 57 | 496·4 | 58 | 585·4 | 10 15 | 0 | 15·32 | 2 | 522·9 | 3 | 731·8 |
| 2 | 522·4 | 3 | 746·5 | 5 16 | 0 | 10·60 | 2 | 499·5 | 3 | 580·3 | | | | | | | |
| 32 | 525·5 | 33 | 731·8 | | 5 | 13·43 | 7 | 503·3 | 8 | 573·4 | 14 17 | 0 | 25 18·28 | 2 | 526·0 | 3 | 716·8 |
| 2 | 524·5 | 3 | 718·0 | | 10 | 13·47 | 12 | 511·4 | 13 | 572·7 | | 10 | 20·42 | 12 | 528·7 | 13 | 713·7 |
| 2 | 517·9 | 3 | 721·5 | | 15 | 11·61 | 17 | 515·3 | 18 | 572·8 | | 15 | 20·63 | 17 | 528·4 | 18 | 711·4 |
| 12 | 517·8 | | | | 20 | 11·69 | | | | | | 20 | 19·79 | 22 | 530·8 | 23 | 709·1 |
| 22 | 517·2 | | | 5 17 | 0 | 04·91 | 2 | 519·7 | 3 | 578·0 | | 35 | 18·90 | 37 | 531·8 | 38 | 706·4 |
| 2 | 520·5 | 3 | 725·5 | | 5 | 03·34 | 7 | 519·0 | 8 | 586·1 | | 40 | 18·23 | | | | |
| | | | | | 10 | 02·01 | 12 | 517·4 | 13 | 594·1 | 14 18 | 0 | 17·47 | 2 | 531·3 | 3 | 705·9 |
| | | | | | 15 | 01·99 | 17 | 516·6 | 18 | 600·9 | | | | | | | |
| 2 | 528·2 | 3 | 747·5 | | 20 | 02·45 | 22 | 512·1 | 23 | 604·5 | 15 8 | 0 | 25 14·70 | 2 | 529·1 | 3 | 745·0 |
| 7 | 533·6 | 8 | 742·9 | | 25 | 03·47 | 27 | 510·4 | 28 | 624·2 | | 10 | 14·67 | 12 | 524·0 | 13 | 747·2 |
| 12 | 532·5 | 13 | 739·3 | | 30 | 04·48 | 32 | 508·7 | 33 | 635·0 | | 15 | 14·26 | 17 | 523·8 | 18 | 747·1 |
| 17 | 529·7 | 18 | 737·5 | | 35 | 07·84 | 37 | 505·2 | 38 | 642·1 | 15 9 | 0 | 13·81 | 2 | 538·5 | 3 | 733·2 |
| 22 | 526·8 | 23 | 734·9 | | 40 | 10·41 | 42 | 502·5 | 43 | 646·7 | | 5 | 10·77 | 7 | 544·1 | 8 | 726·9 |
| 27 | 520·0 | 28 | 736·3 | | 45 | 12·04 | 47 | 501·3 | 48 | 649·6 | | 10 | 12·13 | 12 | 544·5 | 13 | 724·8 |
| 32 | 513·8 | 33 | 738·9 | | 50 | 12·33 | 52 | 504·0 | 53 | 663·0 | | 15 | 12·78 | 17 | 536·9 | 18 | 724·2 |
| 37 | 509·1 | 38 | 738·6 | | 55 | 12·92 | 57 | 505·2 | 58 | 656·5 | | 25 | 12·18 | 27 | 534·5 | | |
| 42 | 523·0 | 43 | 734·8 | 5 18 | 0 | 14·13 | 2 | 507·0 | 3 | 661·3 | | 40 | 15·22 | 42 | 522·7 | 43 | 729·5 |
| 44 | 522·9 | | | | 5 | 16·18 | 7 | 510·0 | 8 | 665·5 | | | | 47 | 518·6 | | |
| | | | | | 15 | 16·72 | 17 | 513·1 | 18 | 674·1 | | 50 | 15·34 | 52 | 518·9 | 53 | 731·8 |
| 47 | 521·1 | 48 | 703·6 | 5 19 | 0 | 15·74 | 2 | 514·9 | 3 | 705·9 | 15 10 | 0 | 15·47 | 2 | 517·4 | 3 | 733·8 |
| 49 | 522·6 | | | | | | | | | | | 30 | 14·55 | 32 | 525·0 | 33 | 731·3 |
| | | | | 6 10 | 0 | 25 16·12 | 2 | 530·0 | 3 | 710·2 | 15 11 | 0 | 14·75 | 2 | 523·6 | 3 | 728·4 |
| 52 | 518·2 | 53 | 657·0 | | 5 | 13·59 | 7 | 533·6 | 8 | 706·9 | | | | | | | |
| 54 | 515·6 | | | | 10 | 14·40 | 12 | 533·1 | 13 | 703·8 | 16 13 | 0¾ | 25 10·20 | 2¾ | 516·9 | 3¾ | 725·5 |
| | | | | | 15 | 14·84 | 17 | 530·9 | 18 | 705·5 | | 5¾ | 11·64 | 7¾ | 518·0 | 8¾ | 725·0 |
| 57 | 515·1 | 58 | 614·0 | | 20 | 14·73 | 22 | 529·1 | 23 | 705·5 | | 10¾ | 13·67 | 12¾ | 517·8 | 13¾ | 720·9 |
| 59 | 517·5 | | | 6 11 | 0 | 16·55 | 2 | 526·6 | 3 | 707·3 | | 15¾ | 14·89 | 17¾ | 519·1 | 18¾ | 715·1 |

BIFILAR. $k=0{\cdot}000140$. BALANCE. $k=0{\cdot}0000085$.

April 6d 0h. Clock 3½s fast.

* See notes on the Aurora Borealis, *after* the *Extra Observations of Magnetometers*.

| Gött. Mean Time. | Declination. | | Bifilar Corrected. | | Balance Corrected. | |
|---|---|---|---|---|---|---|
| d. h. | Min. | ° ′ | Min. | Sc. Div. | Min. | Mic. Div. |
| 16 13 | 20¾ | 25 15·41 | 22¾ | 521·3 | 23¾ | 709·3 |
| | 25¾ | 15·49 | 27¾ | 522·4 | 28¾ | 705·3 |
| | 30¾ | 15·59 | 32¾ | 523·5 | 33¾ | 698·9 |
| | 35¾ | 15·47 | 37¾ | 526·0 | 38¾ | 692·8 |
| | 40¾ | 15·67 | 42¾ | 526·9 | 43¾ | 682·1 |
| | 45¾ | 15·41 | 47¾ | 525·2 | 48¾ | 673·4 |
| | 50¾ | 14·13 | 52¾ | 525·1 | 53¾ | 666·8 |
| | 55¾ | 13·94 | 57¾ | 525·5 | 58¾ | 659·3 |
| 16 14 | 0¾ | 12·65 | 2¾ | 522·3 | 3¾ | 653·0 |
| | 5¾ | 11·68 | 7¾ | 522·0 | 8¾ | 648·4 |
| | 10¾ | 11·17 | 12¾ | 522·8 | 13¾ | 642·6 |
| | 15¾ | 10·60 | 17¾ | 521·7 | 18¾ | 637·8 |
| | 20¾ | 10·40 | 22¾ | 519·9 | 23¾ | 630·2 |
| | 25¾ | 09·42 | 27¾ | 514·9 | 28¾ | 627·7 |
| | 30¾ | 06·93 | 32¾ | 516·7 | 33¾ | 627·1 |
| | 35¾ | 06·98 | 37¾ | 515·6 | | |
| | 40¾ | 05·58 | 42¾ | 517·0 | 43¾ | 626·1 |
| | 45¾ | 05·22 | 47¾ | 517·3 | 48¾ | 626·0 |
| | 50¾ | 04·75 | 52¾ | 516·9 | 53¾ | 628·2 |
| | 55¾ | 05·67 | 57¾ | 515·4 | 58¾ | 633·5 |
| 16 15 | 0¾ | 06·54 | 2¾ | 517·5 | 3¾ | 635·1 |
| | 5¾ | 07·42 | 7¾ | 519·2 | 8¾ | 638·5 |
| | 10¾ | 08·48 | 12¾ | 519·7 | 13¾ | 640·2 |
| | 15¾ | 08·31 | 17¾ | 520·4 | 18¾ | 640·9 |
| | 20¾ | 08·52 | 22¾ | 520·5 | | |
| | 25¾ | 07·72 | 27¾ | 520·7 | 28¾ | 642·0 |
| | 30¾ | 07·18 | 32¾ | 521·3 | | |
| | 35¾ | 06·59 | 37¾ | 522·8 | 38¾ | 642·2 |
| | 40¾ | 07·60 | 42¾ | 521·7 | 43¾ | 643·9 |
| 16 16 | 0¾ | 07·08 | 2¾ | 522·8 | 3¾ | 659·3 |
| | 15¾ | 08·18 | 17¾ | 525·2 | 18¾ | 665·7 |
| | 30¾ | 08·08 | 32¾ | 524·7 | 33¾ | 668·5 |
| | 45¾ | 09·42 | 47¾ | 521·0 | 48¾ | 672·9 |
| 16 17 | 0¾ | 12·11 | 2¾ | 524·8 | 3¾ | 670·7 |
| 16 18 | 0¾ | 22·22 | 2¾ | 549·2 | 3¾ | 554·5 |
| | 5¾ | 22·40 | 7¾ | 550·2 | 8¾ | 554·3 |
| | 10¾ | 21·76 | 12¾ | 549·5 | | |
| | 15¾ | 22·03 | 17¾ | 544·7 | 18¾ | 556·0 |
| | 20¾ | 20·03 | 22¾ | 542·5 | | |
| | 25¾ | 18·87 | 27¾ | 538·8 | 28¾ | 559·8 |
| | 30¾ | 18·11 | 32¾ | 535·5 | 33¾ | 564·4 |
| | 35¾ | 18·58 | 37¾ | 533·2 | | |
| | 40¾ | 19·19 | 42¾ | 528·9 | 43¾ | 573·9 |
| | 45¾ | 20·49 | 47¾ | 527·6 | 48¾ | 588·5 |
| | 50¾ | 24·99 | 52¾ | 519·9 | 53¾ | 595·8 |
| | 55¾ | 25·60 | 57¾ | 524·1 | 58¾ | 596·6 |
| 16 19 | 0¾ | 28·35 | 2¾ | 520·9 | 3¾ | 599·8 |
| | 5¾ | 30·24 | 7¾ | 520·1 | 8¾ | 601·6 |
| | 10¾ | 30·76 | 12¾ | 519·8 | 13¾ | 600·1 |
| | 15¾ | 31·97 | 17¾ | 521·1 | | |
| | 20¾ | 31·28 | 22¾ | 524·0 | 23¾ | 598·0 |
| | 25¾ | 29·90 | | | | |
| | 35¾ | 28·79 | 37¾ | 506·0 | 38¾ | 617·4 |
| | 40¾ | 29·73 | 42¾ | 498·4 | 43¾ | 623·1 |
| | 45¾ | 29·93 | 47¾ | 501·0 | 48¾ | 625·7 |
| | 50¾ | 29·10 | 52¾ | 498·2 | 53¾ | 629·0 |
| | 55¾ | 27·29 | 57¾ | 496·6 | | |
| 16 20 | 0¾ | 27·58 | 2¾ | 490·5 | 3¾ | 643·7 |
| | 5¾ | 27·56 | 7¾ | 482·1 | 8¾ | 649·0 |
| | 10¾ | 27·31 | 12¾ | 478·7 | 13¾ | 656·4 |
| | 15¾ | 28·18 | 17¾ | 475·8 | 18¾ | 662·6 |

| Gött. Mean Time. | Declination. | | Bifilar Corrected. | | Balance Corrected. | |
|---|---|---|---|---|---|---|
| d. h. | Min. | ° ′ | Min. | Sc. Div. | Min. | Mic. Div. |
| 16 20 | 20¾ | 25 27·24 | 22¾ | 475·4 | 23¾ | 661·8 |
| | 25¾ | 26·30 | 27¾ | 476·3 | 28¾ | 652·4 |
| | 30¾ | 25·58 | 32¾ | 473·9 | 33¾ | 665·0 |
| | 35¾ | 25·80 | 37¾ | 475·8 | 38¾ | 666·4 |
| | 40¾ | 26·94 | 42¾ | 479·5 | 43¾ | 667·3 |
| | 45¾ | 27·53 | 47¾ | 475·2 | 48¾ | 671·6 |
| | 50¾ | 29·86 | 52¾ | 476·2 | 53¾ | 674·2 |
| | 55¾ | 28·60 | 57¾ | 466·0 | 58¾ | 681·9 |
| 16 21 | 0¾ | 28·80 | 2¾ | 462·2 | 3¾ | 688·0 |
| | 5¾ | 23·79 | 7¾ | 449·9 | 8¾ | 700·6 |
| | 10¾ | 24·72 | 12¾ | 447·0 | 13¾ | 708·5 |
| | 15¾ | 28·96 | | | | |
| | 16¾ | 30·15 | 17¾ | 451·8 | 18¾ | 708·0 |
| | 20¾ | 30·91 | | | | |
| | 21¾ | 30·78 | 22¾ | 451·9 | 23¾ | 698·3 |
| | 25¾ | 29·04 | 27¾ | 446·8 | 28¾ | 695·7 |
| | 30¾ | 26·30 | 32¾ | 445·5 | 33¾ | 697·1 |
| | 35¾ | 24·20 | 37¾ | 453·2 | 38¾ | 702·6 |
| | 40¾ | 26·63 | 42¾ | 456·3 | 43¾ | 703·8 |
| | 45¾ | 27·49 | 47¾ | 458·4 | 48¾ | 705·5 |
| | 50¾ | 26·40 | 52¾ | 456·4 | 53¾ | 708·0 |
| | 55¾ | 26·28 | 57¾ | 456·5 | 58¾ | 708·7 |
| 16 22 | 0¾ | 27·55 | 2¾ | 457·9 | 3¾ | 707·7 |
| | 5¾ | 28·04 | 7¾ | 461·8 | 8¾ | 708·9 |
| | 10¾ | 27·95 | 12¾ | 464·0 | 13¾ | 714·0 |
| | 15¾ | 27·04 | 17¾ | 468·8 | 18¾ | 720·9 |
| | 20¾ | 26·57 | 22¾ | 468·2 | 23¾ | 726·5 |
| | 25¾ | 26·87 | 27¾ | 466·4 | 28¾ | 731·2 |
| | 30¾ | 27·41 | 32¾ | 462·7 | 33¾ | 734·5 |
| | 35¾ | 27·71 | 37¾ | 466·0 | 38¾ | 735·7 |
| | 40¾ | 28·52 | 42¾ | 464·2 | 43¾ | 741·0 |
| | 45¾ | 27·31 | 47¾ | 467·3 | 48¾ | 742·2 |
| | | | 52¾ | 471·2 | | |
| 16 23 | 0¾ | 29·73 | 2¾ | 472·0 | 3¾ | 754·9 |
| | 5¾ | 30·51 | 7¾ | 466·6 | 8¾ | 762·0 |
| | 10¾ | 29·50 | 12¾ | 469·9 | 13¾ | 765·0 |
| | 15¾ | 29·26 | 17¾ | 471·8 | 18¾ | 768·8 |
| | 20¾ | 28·96 | 22¾ | 468·7 | 23¾ | 778·6 |
| | 25¾ | 31·14 | 27¾ | 465·7 | 28¾ | 790·2 |
| | 30¾ | 32·73 | 32¾ | 463·4 | 33¾ | 799·0 |
| | 35¾ | 32·35 | 37¾ | 466·9 | 38¾ | 805·9 |
| | 40¾ | 32·91 | 42¾ | 470·0 | 43¾ | 815·1 |
| | 45¾ | 31·93 | 47¾ | 465·0 | 48¾ | 826·7 |
| | 50¾ | 31·93 | 52¾ | 473·7 | 53¾ | 834·6 |
| | 55¾ | 29·16 | 57¾ | 485·8 | 58¾ | 833·5 |
| 17 0 | 0¾ | 27·29 | 2¾ | 480·6 | 3¾ | 837·7 |
| | 5¾ | 24·53 | 7¾ | 476·8 | 8¾ | 843·8 |
| | 10¾ | 27·98 | 12¾ | 491·5 | 13¾ | 844·9 |
| | 15¾ | 27·58 | 17¾ | 489·0 | 18¾ | 859·2 |
| | 20¾ | 25·78 | 22¾ | 486·8 | 23¾ | 866·7 |
| | 25¾ | 24·55 | 27¾ | 495·9 | 28¾ | 863·9 |
| | 30¾ | 24·19 | 32¾ | 503·0 | 33¾ | 856·1 |
| | 35¾ | 26·84 | 37¾ | 506·5 | 38¾ | 859·4 |
| | 40¾ | 30·67 | 42¾ | 509·2 | 43¾ | 872·5 |
| | 45¾ | 33·11 | 47¾ | 520·8 | 48¾ | 906·0 |
| | 50¾ | 35·63 | 52¾ | 527·8 | 53¾ | 965·4 |
| | 55¾ | 38·04 | | | | |
| | 56¾ | 39·55 | 57¾ | 528·2 | 58¾ | 1019·0 |
| | 59¾ | 42·34 | | | | |
| 17 1 | 0¾ | 43·00 | | | | |
| | 1¾ | 41·37 | 2¾ | 559·8 | 3¾ | 1082·9 |

| Gött. Mean Time. | Declination. | |
|---|---|---|
| d. h. | Min. | ° ′ |
| 17 1 | | |
| | 5¾ | 25 37·20 |
| | 10¾ | 36·70 |
| | 15¾ | 32·39 |
| | 20¾ | 32·51 |
| | 25¾ | 30·32 |
| | 30¾ | 28·79 |
| | 35 | 25·85 |
| | 40 | 23·70 |
| | 45 | 23·38 |
| | 50 | 24·52 |
| | 55 | 25·56 |
| 17 2 | 0 | 25·56 |
| | 5 | 25·19 |
| | 10 | 26·30 |
| | 15 | 25·81 |
| | 20 | 29·12 |
| | 25 | 29·77 |
| | 30 | 28·22 |
| | 35 | 29·70 |
| | 40 | 28·15 |
| | 45 | 28·42 |
| | 50 | 31·34 |
| | 55 | 30·87 |
| 17 3 | 0 | 26·72 |
| | 5 | 27·78 |
| | 10 | 22·62 |
| | 15 | 28·83 |
| | 20 | 26·45 |
| | 25 | 27·10 |
| | 30 | 28·35 |
| | 35 | 30·69 |
| | 40 | 30·74 |
| | 45 | 30·58 |
| | 50 | 26·81 |
| | 55 | 28·04 |
| 17 4 | 0 | 27·61 |
| | 5 | 30·69 |
| | 10 | 25·41 |
| | 15 | 26·75 |
| | 20 | 24·22 |
| | 25 | 27·31 |
| | 30 | 20·36 |
| | 35 | 23·04 |
| | 40 | 25·58 |
| | 45 | 24·35 |
| | 50 | 24·39 |
| | 55 | 25·61 |
| 17 5 | 0 | 26·16 |
| | 5 | 25·44 |
| | 10 | 25·96 |
| | 15 | 27·41 |
| | 20 | 26·90 |
| | 25 | 24·72 |
| | 30 | 24·84 |

BIFILAR. $k$=0·000140. BALANCE. $k$=0·0000085.

April 17d 1h 31m, Clock 43s slow; set right. The minutes of observation have been given to the nearest quarter since 16d 13h.

| Bifilar Corrected. | | Balance Corrected. | | Gött. Mean Time. | Declination. | | Bifilar Corrected. | | Balance Corrected. | | Gött. Mean Time. | Declination. | | Bifilar Corrected. | | Balance Corrected. | |
|---|---|---|---|---|---|---|---|---|---|---|---|---|---|---|---|---|---|
| Min. | Sc. Div. | Min. | Mic. Div. | d. h. | Min. | ° ′ | Min. | Sc. Div. | Min. | Mic. Div. | d. h. | Min. | ° ′ | Min. | Sc. Div. | Min. | Mic. Div. |
| 4¾ | 574·5 | | | 17 5 | 35 | 25 23·78 | 37 | 553·0 | 38 | 940·5 | 17 9 | 0 | 25 15·65 | 2 | 523·7 | 3 | 847·1 |
| 6¾ | 587·2 | 7¾ | 1141·8 | | 40 | 21·77 | 42 | 555·9 | 43 | 941·4 | | 20 | 08·72 | 22 | 531·5 | 23 | 829·6 |
| 8¾ | 589·5 | 9¾ | 1133·8 | | 45 | 20·55 | 47 | 551·3 | 48 | 944·9 | | 30 | 09·42 | 32 | 532·0 | 33 | 830·3 |
| 11¾ | 595·1 | | | | 50 | 20·65 | 52 | 544·6 | 53 | 945·2 | | 35 | 10·06 | 37 | 540·3 | 38 | 830·1 |
| 12¾ | 598·0 | 12¾ | 1138·9 | | 55 | 10·83 | 57 | 582·6 | 58 | 926·3 | | 40 | 12·93 | 42 | 524·9 | 43 | 827·9 |
| 14¾ | 607·8 | 13¾ | 1133·0 | 17 6 | 0 | 19·93 | 2 | 593·2 | 3 | 931·8 | | 45 | 13·05 | 47 | 512·6 | 48 | 822·5 |
| | | 16¾ | 1108·8 | | 5 | 34·44 | | | | | | 50 | 10·83 | 52 | 513·9 | 53 | 811·0 |
| 17¾ | 599·5 | 18¾ | 1084·5 | | 7 | 35·70 | 7 | 564·0 | | | | 55 | 08·83 | 57 | 521·3 | 58 | 804·6 |
| 19¾ | 602·8 | | | | 8 | 35·02 | | | 8 | 963·5 | 17 10 | 0 | 07·91 | 2 | 515·7 | 3 | 797·1 |
| 21¾ | 601·5 | 22¾ | 1056·0 | | 10 | 32·60 | 12 | 554·9 | 13 | 984·8 | | 5 | 06·06 | 7 | 516·2 | 8 | 793·7 |
| 23¾ | 593·3 | 24¾ | 1058·9 | | 15 | 28·22 | 15 | 569·4 | | | | 10 | 04·86 | 12 | 515·9 | 13 | 787·2 |
| 27¾ | 580·9 | 28¾ | 1051·4 | | | | 17 | 571·1 | 18 | 975·6 | | 15 | 03·45 | 17 | 518·7 | 18 | 779·5 |
| 32 | 568·4 | 33 | 1037·9 | | 20 | 32·13 | 20 | 570·8 | | | | 20 | 02·62 | 22 | 515·5 | 23 | 768·7 |
| 37 | 569·1 | 38 | 1039·3 | | | | 21 | 561·8 | | | | 25 | 01·39 | 27 | 520·4 | 28 | 758·1 |
| 42 | 567·0 | 43 | 1024·1 | | | | 22 | 551·0 | 22 | 972·1 | | 30 | 00·77 | 32 | 527·2 | 33 | 750·9 |
| 47 | 552·7 | 48 | 998·1 | | 23 | 34·27 | 23 | 541·5 | | | | 35 | 02·60 | 37 | 520·0 | 38 | 746·5 |
| 52 | 550·4 | 53 | 974·7 | | | | 24 | 539·8 | 24 | 971·9 | | 40 | 04·98 | 42 | 516·8 | 43 | 743·3 |
| 57 | 553·6 | 58 | 957·1 | | 25 | 28·82 | 25 | 541·8 | | | | 45 | 06·06 | 47 | 513·2 | 48 | 737·0 |
| 2 | 546·3 | 3 | 948·3 | | | | 26 | 547·4 | | | | 50 | 05·08 | 52 | 520·5 | 53 | 733·1 |
| 7 | 554·4 | 8 | 935·9 | | 27 | 23·96 | 27 | 562·2 | | | * | 55 | 02·12 | 57 | 533·1 | 58 | 733·4 |
| 12 | 560·8 | 13 | 923·4 | | 28 | 23·52 | 28 | 566·3 | | | 17 11 | 0 | 04·61 | 2 | 530·0 | 3 | 727·3 |
| 17 | 566·1 | 18 | 918·1 | | | | 29 | 580·2 | 29 | 980·2 | | 5 | 06·86 | 7 | 520·4 | 8 | 728·3 |
| 22 | 568·3 | 23 | 916·5 | | 30 | 26·70 | 30 | 577·2 | | | | 10 | 06·70 | 12 | 514·6 | 13 | 734·7 |
| 27 | 552·6 | 28 | 921·8 | | | | 31 | 573·6 | 31 | 983·0 | | 15 | 05·89 | 17 | 514·9 | 18 | 739·9 |
| 32 | 561·0 | 33 | 916·5 | | 32 | 29·53 | 32 | 572·0 | | | | 20 | 06·39 | 22 | 515·9 | 23 | 742·4 |
| 37 | 554·3 | 38 | 924·6 | | 33 | 32·19 | 33 | 568·3 | | | | 25 | 07·49 | 27 | 513·6 | 28 | 746·9 |
| 42 | 561·9 | 43 | 932·2 | | | | 34 | 558·3 | 34 | 983·7 | | | | 32 | 519·2 | 33 | 754·4 |
| 47 | 564·1 | 48 | 937·1 | | 35 | 34·07 | 35 | 549·2 | | | | 35 | 08·83 | 37 | 513·3 | 38 | 755·6 |
| 52 | 566·7 | 53 | 943·9 | | | | 36 | 545·7 | 36 | 985·6 | | 40 | 07·94 | 42 | 517·9 | 43 | 755·6 |
| 57 | 564·6 | 58 | 951·9 | | 37 | 31·34 | 37 | 546·6 | | | | 45 | 08·56 | 47 | 516·6 | 48 | 755·5 |
| 2 | 562·8 | 3 | 945·2 | | 38 | 30·57 | 38 | 547·6 | | | 17 12 | 0 | 10·38 | 2 | 504·1 | 3 | 749·8 |
| 7 | 558·2 | 8 | 943·0 | | | | 39 | 546·8 | 39 | 985·3 | | 5 | 09·30 | 7 | 505·3 | 8 | 753·6 |
| 12 | 569·6 | 13 | 939·4 | | 40 | 30·24 | 40 | 545·2 | | | | 10 | 07·44 | 12 | 506·2 | 13 | 750·9 |
| 17 | 555·3 | 18 | 954·4 | | | | 41 | 541·2 | 41 | 983·4 | | 15 | 06·50 | 17 | 508·2 | 18 | 742·7 |
| 22 | 556·6 | 23 | 949·7 | | 42 | 29·81 | 42 | 537·1 | | | | 20 | 06·03 | 22 | 506·6 | 23 | 738·0 |
| 27 | 560·5 | 28 | 948·2 | | 43 | 28·65 | 43 | 535·9 | | | | 25 | 06·07 | 27 | 514·5 | 28 | 726·5 |
| 32 | 565·9 | 33 | 955·4 | | | | 44 | 535·8 | 44 | 974·2 | | | | 29 | 517·4 | | |
| 37 | 568·6 | 38 | 964·4 | | 45 | 26·72 | | | 46 | 967·6 | | 30 | 06·03 | 32 | 517·6 | 33 | 723·5 |
| 42 | 570·9 | 43 | 979·9 | | | | 47 | 535·1 | 48 | 967·7 | | 35 | 06·12 | 37 | 505·8 | 38 | 730·2 |
| 47 | 570·8 | 48 | 1006·4 | | 50 | 25·02 | 52 | 529·1 | 53 | 954·8 | | 40 | 06·09 | 42 | 499·7 | 43 | 732·5 |
| 52 | 576·0 | 53 | 1005·5 | | 55 | 19·69 | 57 | 534·1 | 58 | 942·7 | | 45 | 04·71 | 47 | 511·7 | 48 | 743·8 |
| 57 | 577·7 | 58 | 1017·0 | 17 7 | 0 | 20·06 | 2 | 539·8 | 3 | 940·7 | | 50 | 05·72 | 52 | 514·2 | 53 | 721·2 |
| 2 | 577·5 | 3 | 1016·0 | | 5 | 17·96 | 7 | 552·5 | 8 | 941·8 | | | | 54 | 504·5 | 54 | 730·9 |
| 7 | 572·6 | 8 | 1029·0 | | 10 | 23·32 | 12 | 535·9 | 13 | 934·3 | | 55 | 11·72 | 56 | 495·4 | | |
| 12 | 572·7 | 13 | 1013·3 | | 15 | 24·39 | 17 | 528·5 | 18 | 946·4 | | | | 57 | 491·0 | 58 | 700·7 |
| 17 | 559·9 | 18 | 1009·1 | | 20 | 20·23 | 22 | 525·9 | 23 | 938·5 | | | | 59 | 489·6 | | |
| 22 | 558·7 | 23 | 995·1 | | 25 | 16·70 | 27 | 535·7 | 28 | 942·1 | 17 13 | 0 | 15·41 | 1 | 486·1 | 2 | 681·0 |
| 27 | 546·9 | 28 | 1000·8 | | 30 | 16·19 | 32 | 535·6 | 33 | 936·8 | | | | 3 | 488·6 | | |
| 32 | 553·0 | 33 | 974·9 | | 35 | 15·47 | 37 | 537·4 | 38 | 933·4 | | 5 | 15·62 | 7 | 483·1 | 8 | 647·9 |
| 37 | 555·1 | 38 | 961·7 | | 40 | 13·88 | 42 | 537·8 | 43 | 927·8 | | | | 9 | 484·8 | | |
| 42 | 551·6 | 43 | 952·3 | | 45 | 14·10 | 47 | 532·8 | 48 | 929·5 | | 10 | 11·75 | 12 | 494·6 | 13 | 648·1 |
| 47 | 557·7 | 48 | 936·2 | | 50 | 13·72 | 52 | 534·3 | 53 | 935·2 | | 15 | 10·47 | 17 | 502·8 | 18 | 652·3 |
| 52 | 561·3 | 53 | 928·3 | | 55 | 13·23 | 57 | 533·5 | 58 | 923·0 | | 20 | 13·29 | 22 | 503·5 | 23 | 650·4 |
| 57 | 563·2 | 58 | 920·5 | 17 8 | 0 | 18·10 | 2 | 526·7 | 3 | 929·9 | | 25 | 15·92 | 27 | 504·3 | 28 | 627·6 |
| 2 | 565·0 | 3 | 915·6 | | 5 | 15·99 | 7 | 520·1 | 8 | 893·2 | | 30 | 16·45 | | | 31 | 618·8 |
| 7 | 559·4 | 8 | 915·9 | | 10 | 12·13 | 12 | 522·8 | 13 | 904·7 | | | | 32 | 502·9 | 33 | 615·2 |
| 12 | 559·4 | 13 | 917·5 | | 15 | 11·30 | 17 | 521·5 | 18 | 895·8 | | 35 | 16·15 | 36 | 495·3 | | |
| 17 | 552·2 | 18 | 927·7 | | 20 | 11·35 | 22 | 523·9 | 23 | 890·0 | | | | 37 | 497·5 | 38 | 613·4 |
| 22 | 546·6 | 23 | 939·8 | | 25 | 10·13 | 27 | 523·9 | 28 | 875·6 | | | | 42 | 501·4 | 43 | 618·6 |
| 27 | 549·9 | 28 | 941·9 | | 30 | 10·38 | 32 | 525·7 | 33 | 861·8 | | 44 | 12·90 | | | | |
| 32 | 549·5 | 33 | 936·1 | | 35 | 11·12 | 37 | 527·9 | | | | 45 | 11·95 | 47 | 511·2 | 48 | 630·3 |

BIFILAR. $k=0{\cdot}000140$. BALANCE. $k=0{\cdot}0000085$.

April 17ᵈ 6ʰ 20ᵐ. The readings of the bifilar diminished slowly and without vibration from 20ᵐ till 23ᵐ 55ˢ, when they began to increase, continuing to increase till 29ᵐ 15ˢ, when they again diminished gradually till 36ᵐ, still without vibration; at 37ᵐ the magnet began to vibrate

| Gött. Mean Time. | Declination. | | Bifilar Corrected. | | Balance Corrected. | |
|---|---|---|---|---|---|---|
| d. h. | Min. | ° ′ | Min. | Sc. Div. | Min. | Mic. Div. |
| 17 13 | | | 52 | 519·7 | 53 | 643·7 |
| | 55 | 25 08·66 | 57 | 525·4 | 58 | 660·6 |
| 17 14 | 0 | 08·77 | 2 | 525·7 | 3 | 676·4 |
| | 5 | 10·18 | 7 | 520·4 | 8 | 692·0 |
| | 10 | 10·30 | 12 | 518·5 | 13 | 704·7 |
| | 25 | 13·69 | 27 | 516·5 | 28 | 732·2 |
| 17 15 | 0 | 17·00 | 2 | 513·3 | 3 | 746·5 |
| 18 9 | 0 | 25 17·12 | 2 | 531·0 | 3 | 751·4 |
| | 55 | 13·46 | 57 | 527·6 | | |
| 18 10 | 0 | 14·92 | 2 | 526·1 | 3 | 746·2 |
| | 5 | 15·05 | 7 | 524·6 | 8 | 745·5 |
| | 10 | 16·16 | 12 | 523·9 | 13 | 744·3 |
| | 15 | 16·28 | 17 | 518·2 | | |
| | 20 | 16·95 | 22 | 518·1 | 23 | 744·6 |
| | 25 | 18·97 | 27 | 519·9 | 28 | 743·5 |
| | 30 | 19·31 | 32 | 523·5 | 33 | 740·2 |
| | 35 | 19·28 | | | | |
| 18 11 | 0 | 12·73 | 2 | 528·6 | 3 | 719·9 |
| | 10 | 11·32 | 12 | 510·2 | 13 | 718·5 |
| | 15 | 10·48 | 17 | 507·7 | 18 | 716·5 |
| | 20 | 08·73 | 22 | 509·8 | 23 | 714·7 |
| | 25 | 09·12 | 27 | 512·3 | | |
| | 30 | 09·37 | 32 | 516·6 | | |
| | 40 | 12·48 | 42 | 519·0 | | |
| 18 12 | 0 | 12·55 | 2 | 517·2 | 3 | 706·9 |
| | 35 | 14·33 | 37 | 513·9 | 38 | 715·3 |
| 18 13 | 0 | 15·83 | 2 | 516·5 | 3 | 725·7 |
| 21 21 | 0 | 25 13·02 | 2 | 517·2 | 3 | 758·3 |
| | 20 | 12·89 | 22 | 516·8 | 23 | 756·1 |
| 21 22 | 0 | 13·69 | 2 | 512·9 | 3 | 748·3 |
| 22 20 | 0 | 25 12·75 | 2 | 523·5 | 3 | 733·5 |
| | 15 | 13·34 | 17 | 524·2 | 18 | 753·0 |
| | 30 | 12·78 | 32 | 522·7 | 33 | 748·4 |
| 22 21 | 0 | 12·46 | 2 | 520·0 | 3 | 763·7 |
| 25 7 | 0 | 25 13·12 | 2 | 572·3 | 3 | 922·9 |
| | 5 | 25 04·04 | 5 | 582·4 | | |
| | | | 7 | 587·1 | 8 | 988·5 |
| | 9 | 24 54·60 | 9 | 596·4 | | |
| | 10 | 24 51·27 | 10 | 605·0 | | |
| | | | 11 | 600·0 | | |
| | 12 | 24 46·79 | 12 | 610·7 | | |
| | | | 13 | 606·4 | 13 | 1015·4 |
| | 14 | 24 43·32 | 14 | 601·3 | | |
| | 15 | 24 43·70 | 15 | 694·3 | | |
| | 16 | 24 44·70 | 16 | 587·9 | | |
| | | | 17 | 583·2 | 18 | 906·6 |
| | | | 19 | 582·8 | | |
| | 20 | 25 01·34 | 22 | 561·7 | 21 | 876·5 |
| | 23 | 09·12 | | | 23 | 870·4 |
| | | | 24 | 543·1 | | |
| | 25 | 08·52 | 26 | 530·9 | | |
| | | | 27 | 528·9 | 28 | 860·4 |
| | | | 29 | 530·7 | | |
| | 30 | 04·12 | 32 | 531·8 | 33 | 853·8 |
| 25 11 | 0 | 25 16·99 | 2 | 529·3 | 3 | 728·0 |
| 25 12 | 0 | 24 48·47 | 2 | 515·8 | 3 | 640·2 |

| Gött. Mean Time. | Declination. | | Bifilar Corrected. | | Balance Corrected. | |
|---|---|---|---|---|---|---|
| d. h. | Min. | ° ′ | Min. | Sc. Div. | Min. | Mic. Div. |
| 25 12 | 5 | 24 50·46 | 7 | 493·9 | 8 | 637·1 |
| | 10 | 24 59·39 | 12 | 479·1 | 13 | 645·6 |
| | 15 | 25 08·08 | 17 | 484·4 | 18 | 646·9 |
| | 20 | 12·87 | 22 | 501·9 | 23 | 636·9 |
| | 25 | 16·23 | 27 | 497·2 | 28 | 602·5 |
| | 30 | 17·53 | 32 | 496·9 | 33 | 572·1 |
| | 35 | 17·26 | 37 | 498·0 | 38 | 554·6 |
| | 40 | 16·39 | 42 | 505·1 | 43 | 565·2 |
| | 45 | 14·20 | 47 | 509·8 | 48 | 580·2 |
| | 50 | 12·33 | 52 | 515·1 | 53 | 593·5 |
| | 55 | 11·44 | 57 | 518·6 | 58 | 610·1 |
| 25 13 | 0 | 10·61 | 2 | 522·1 | 3 | 621·4 |
| | 5 | 10·77 | 7 | 523·5 | 8 | 631·7 |
| | 10 | 12·16 | 12 | 521·9 | 13 | 642·4 |
| | 15 | 13·32 | 17 | 520·7 | 18 | 649·8 |
| | 20 | 13·93 | 22 | 519·5 | 23 | 659·9 |
| | 25 | 14·20 | 27 | 518·7 | 28 | 667·4 |
| | 45 | 14·80 | 47 | 522·8 | 48 | 689·3 |
| 25 14 | 0 | 14·40 | 2 | 522·5 | 3 | 697·6 |
| | 15 | 15·14 | 17 | 521·6 | 18 | 702·3 |
| | 30 | 14·13 | 32 | 522·4 | | |
| 25 15 | 0 | 16·82 | 2 | 521·1 | 3 | 719·8 |
| 26 0 | 0 | 25 23·54 | 2 | 499·4 | 3 | 739·5 |
| | | | 7 | 488·9 | 8 | 744·0 |
| | | | 12 | 485·2 | | |
| | 15 | 27·17 | 17 | 492·3 | 18 | 745·7 |
| | 20 | 28·13 | 22 | 488·4 | 23 | 747·3 |
| | 25 | 29·64 | 27 | 487·1 | | |
| | 30 | 32·03 | 32 | 487·1 | | |
| | 35 | 34·37 | 37 | 484·6 | 38 | 750·4 |
| | 40 | 35·73 | 42 | 477·6 | 43 | 752·8 |
| | 45 | 34·88 | 47 | 472·2 | 48 | 752·1 |
| | 50 | 34·88 | 52 | 485·9 | 53 | 749·4 |
| | 55 | 35·89 | 57 | 482·2 | 58 | 746·9 |
| 26 1 | 0 | 33·28 | 2 | 488·1 | 3 | 740·6 |
| | 5 | 32·30 | 7 | 497·6 | 8 | 733·9 |
| | 10 | 31·55 | 12 | 507·7 | 13 | 728·5 |
| | 15 | 30·91 | 17 | 507·6 | 18 | 727·2 |
| | 20 | 29·83 | 22 | 509·3 | | |
| | 25 | 28·16 | 27 | 512·9 | | |
| | 30 | 26·94 | 32 | 513·5 | | |
| | 35 | 25·87 | 37 | 515·8 | | |
| | 40 | 25·81 | 42 | 517·8 | | |
| | 50 | 26·34 | 52 | 521·9 | 53 | 727·0 |
| 26 2 | 0 | 26·23 | 2 | 525·3 | 3 | 726·1 |
| 26 4 | 0 | 26·90 | 2 | 548·6 | 3 | 765·3 |
| | | | 7 | 543·7 | | |
| | 10 | 25·26 | 12 | 541·6 | 13 | 772·0 |
| | | | 22 | 528·8 | 23 | 783·3 |
| | | | 27 | 521·4 | 28 | 788·0 |
| | 35 | 25·56 | 37 | 523·4 | | |
| 26 5 | 0 | 24·69 | 2 | 509·0 | 3 | 806·6 |
| | | | 12 | 526·8 | 13 | 810·1 |
| | 15 | 20·29 | 17 | 544·7 | 18 | 807·2 |
| | 20 | 21·10 | 22 | 541·7 | 23 | 806·8 |
| | | | 27 | 534·8 | | |
| | 50 | 18·84 | 52 | 522·5 | 53 | 820·5 |
| 26 6 | 0 | 14·08 | 2 | 518·5 | 3 | 838·0 |
| | 25 | 14·26 | 27 | 540·7 | 28 | 827·9 |
| 26 7 | 0 | 16·92 | 2 | 531·8 | 3 | 811·1 |

| Gött. Mean Time. | Declination. | |
|---|---|---|
| d. h. | Min. | ° ′ |
| 26 13 | 0 | 25 28·32 |
| | 5 | 27·55 |
| | 10 | 25·81 |
| | 15 | 24·01 |
| | 20 | 21·98 |
| | 25 | 20·20 |
| | 30 | 19·17 |
| | 35 | 17·84 |
| | 45 | 16·26 |
| | 55 | 14·23 |
| 26 14 | 0 | 13·63 |
| | 5 | 15·02 |
| 26 15 | 0 | 16·30 |
| 26 16 | 0 | 20·49 |
| | 5 | 20·82 |
| | 10 | 21·70 |
| | 25 | 22·87 |
| | 30 | 23·27 |
| | 35 | 24·32 |
| | 40 | 23·21 |
| | 45 | 23·99 |
| | 55 | 22·99 |
| 26 17 | 0 | 23·02 |
| | 10 | 22·37 |
| | 15 | 21·79 |
| 26 18 | 0 | 15·71 |
| 26 21 | 0 | 25 16·53 |
| | 5 | 18·10 |
| | 50 | 14·13 |
| | 55 | 16·48 |
| 26 22 | 0 | 16·79 |
| 27 6 | 0 | 25 18·10 |
| | 10 | 17·84 |
| | 30 | 15·62 |
| | 35 | 11·28 |
| | 36 | 09·26 |
| | 40 | 03·37 |
| | 41 | 25 02·79 |
| | 45 | 24 58·22 |
| | 46 | 24 57·48 |
| | 50 | 24 56·16 |
| | 55 | 25 04·31 |
| | 56 | 05·80 |
| 27 7 | 0 | 09·69 |
| | 5 | 12·28 |
| | 10 | 13·69 |
| | 20 | 16·13 |
| | 25 | 16·30 |
| | 35 | 15·47 |
| | 45 | 16·12 |
| | 55 | 16·50 |
| 27 8 | 0 | 16·84 |
| | 10 | 18·05 |

BIFILAR. $k$=0·000140. BALANCE. $k$=0·0000085.

April 25$^d$ 7$^h$ 0$^m$—30$^m$. For observations before and after this time, see *Term-Day Observations*.
April 27$^d$ 6$^h$ 25$^m$. The declination and bifilar magnets had not changed their position since the observation at 10$^m$.

| Bifilar Corrected. | | Balance Corrected. | | Gött. Mean Time. | Declination. | | Bifilar Corrected. | | Balance Corrected. | | Gött. Mean Time. | Declination. | | Bifilar Corrected. | | Balance Corrected. | |
|---|---|---|---|---|---|---|---|---|---|---|---|---|---|---|---|---|---|
| Min. | Sc. Div. | Min. | Mic. Div. | d. h. | Min. | ° ′ | Min. | Sc. Div. | Min. | Mic. Div. | d. h. | Min. | ° ′ | Min. | Sc. Div. | Min. | Mic. Div. |
| 2 | 510·6 | 3 | 625·4 | 27 9 | 0 | 25 17·89 | 2 | 532·9 | 3 | 747·2 | 30 17 | 15 | 25 18·54 | 17 | 509·5 | 18 | 674·2 |
| 7 | 508·7 | 8 | 615·8 | | 30 | 12·85 | 32 | 527·0 | 33 | 742·6 | | 25 | 18·84 | 27 | 512·5 | | |
| 12 | 509·8 | 13 | 609·5 | 27 10 | 0 | 16·70 | 2 | 519·6 | 3 | 738·9 | 30 18 | 0 | 14·58 | 2 | 518·8 | 3 | 672·9 |
| 17 | 508·4 | 18 | 604·3 | | 10 | 18·16 | 12 | 526·7 | 13 | 730·2 | | | | | | | |
| 22 | 509·7 | 23 | 601·5 | | 15 | 17·34 | 17 | 522·8 | 18 | 729·0 | 1 7 | 0 | 25 12·15 | 2 | 540·9 | 3 | 761·6 |
| 27 | 510·3 | 28 | 602·8 | | 25 | 14·30 | 27 | 521·8 | 28 | 727·7 | | 10 | 09·30 | 12 | 559·0 | 13 | 758·9 |
| 32 | 507·3 | 33 | 603·9 | | 30 | 16·97 | 32 | 518·8 | 33 | 726·1 | | 15 | 12·18 | 17 | 549·9 | 18 | 761·6 |
| | | | | | 35 | 17·70 | 37 | 516·7 | 38 | 723·7 | | 25 | 11·03 | 27 | 548·2 | 28 | 755·9 |
| 47 | 507·9 | 48 | 622·3 | | 40 | 16·89 | 42 | 513·1 | | | | | | 40 | 537·9 | | |
| 57 | 512·9 | 58 | 636·1 | | 50 | 20·20 | 52 | 508·1 | 53 | 716·1 | 1 8 | 0 | 14·50 | 2 | 535·7 | 3 | 754·6 |
| 2 | 516·2 | 3 | 641·6 | | 55 | 21·09 | 57 | 507·3 | 58 | 710·4 | 1 10 | 0 | 10·97 | 2 | 522·7 | 3 | 735·3 |
| 7 | 518·4 | 8 | 650·6 | 27 11 | 0 | 21·24 | 2 | 511·7 | 3 | 703·7 | | 15 | 12·04 | 17 | 520·0 | 18 | 736·6 |
| 2 | 515·8 | 3 | 676·0 | | 15 | 20·32 | 17 | 524·6 | 18 | 689·5 | 1 11 | 0 | 09·42 | 2 | 516·6 | 3 | 699·6 |
| 2 | 490·0 | 3 | 622·2 | 27 12 | 0 | 19·41 | 2 | 525·6 | 3 | 697·3 | | 5 | 08·68 | 7 | 516·4 | 8 | 698·6 |
| 7 | 491·6 | 8 | 615·6 | | | | | | | | | 10 | 08·53 | 12 | 514·4 | 13 | 699·4 |
| 12 | 494·5 | 13 | 610·4 | 29 2 | 0 | 25 26·13 | 2 | 525·5 | 3 | 742·3 | | 15 | 07·94 | 17 | 511·3 | 18 | 701·2 |
| 27 | 486·7 | 28 | 582·9 | | 30 | 26·16 | 32 | 510·0 | 33 | 735·2 | | 20 | 07·82 | 22 | 508·1 | | |
| 32 | 493·0 | 33 | 581·4 | | 45 | 26·30 | 47 | 519·2 | 48 | 729·5 | | 25 | 07·47 | 27 | 507·3 | | |
| 37 | 494·7 | 38 | 581·9 | 29 3 | 0 | 25·53 | 2 | 527·8 | 3 | 729·3 | | 30 | 07·07 | 32 | 508·1 | 33 | 697·5 |
| 42 | 499·1 | 43 | 583·9 | 29 4 | 0 | 25·11 | 2 | 516·5 | 3 | 737·5 | | 35 | 08·05 | 37 | 509·3 | | |
| 47 | 499·2 | 48 | 590·4 | | | | 37 | 518·5 | 38 | 766·4 | | 40 | 09·53 | 42 | 513·0 | 43 | 697·7 |
| 57 | 502·5 | 58 | 602·5 | 29 5 | 0 | 22·85 | 2 | 539·0 | 3 | 764·4 | | 45 | 10·13 | 47 | 517·3 | 48 | 695·0 |
| 2 | 501·5 | 3 | 612·7 | 29 7 | 0 | 17·61 | 2 | 538·2 | 3 | 787·9 | | 50 | 09·56 | 52 | 518·7 | 53 | 690·7 |
| 12 | 510·1 | 13 | 622·4 | | 40 | 09·19 | 42 | 530·2 | 43 | 810·3 | | 55 | 09·46 | 57 | 520·1 | 58 | 685·5 |
| 17 | 513·4 | 18 | 626·1 | | 45 | 09·42 | 47 | 531·8 | | | 1 12 | 0 | 08·88 | 2 | 517·5 | 3 | 680·7 |
| 2 | 519·0 | 3 | 647·6 | | 50 | 10·23 | 52 | 532·0 | | | | 5 | 07·27 | 7 | 517·8 | 8 | 675·8 |
| | | | | 29 8 | 0 | 12·78 | 2 | 529·1 | 3 | 805·2 | | 10 | 06·26 | 12 | 516·5 | 13 | 674·9 |
| 2 | 510·8 | 3 | 731·6 | | | | | | | | | 15 | 05·45 | 17 | 515·6 | 18 | 672·5 |
| 7 | 508·0 | | | 29 11 | 0 | 25 15·54 | 2 | 532·5 | 3 | 739·5 | | 40 | 09·35 | 42 | 515·0 | 43 | 679·0 |
| 52 | 511·4 | 53 | 746·9 | | 5 | 14·91 | 7 | 555·1 | 8 | 726·5 | 1 13 | 0 | 12·83 | 2 | 519·7 | 3 | 674·1 |
| 57 | 505·4 | | | | 10 | 18·60 | 12 | 557·9 | 13 | 716·9 | | | | | | | |
| 2 | 504·0 | 3 | 747·8 | | 15 | 19·64 | 17 | 552·4 | 18 | 710·9 | 2 11 | 0 | 25 12·85 | 2 | 541·8 | 3 | 696·8 |
| | | | | | 20 | 17·84 | 22 | 546·9 | 23 | 699·3 | | 5 | 12·20 | 7 | 537·7 | 8 | 695·2 |
| 2 | 547·6 | 3 | 768·0 | | 25 | 15·51 | 27 | 540·3 | 28 | 693·5 | | 10 | 11·69 | 12 | 534·2 | 13 | 692·8 |
| 12 | 547·4 | 13 | 774·1 | | 30 | 14·01 | 32 | 535·1 | 33 | 690·7 | | 15 | 11·98 | 17 | 531·7 | 18 | 690·0 |
| 32 | 528·1 | 33 | 788·2 | | 35 | 12·56 | 37 | 527·0 | 38 | 689·0 | | 20 | 12·46 | 22 | 531·1 | 23 | 687·9 |
| 34 | 518·8 | | | | 40 | 10·61 | 42 | 525·8 | 43 | 691·4 | | 40 | 15·76 | 42 | 528·9 | 43 | 668·4 |
| | | | | | 45 | 09·39 | 47 | 524·3 | 48 | 697·2 | 2 12 | 0 | 11·14 | 2 | 524·7 | 3 | 645·4 |
| 37 | 514·7 | 38 | 798·5 | | 50 | 09·42 | 52 | 527·8 | 53 | 704·1 | | 5 | 08·80 | 7 | 527·7 | 8 | 641·8 |
| 39 | 520·9 | | | | 55 | 10·85 | 57 | 528·7 | 58 | 706·4 | | 10 | 07·98 | 12 | 529·7 | 13 | 639·1 |
| | | | | 29 12 | 0 | 10·75 | 2 | 528·5 | 3 | 704·7 | | 15 | 08·05 | 17 | 527·5 | 18 | 637·5 |
| 42 | 527·3 | 43 | 804·1 | | 5 | 09·30 | 7 | 529·7 | 8 | 703·2 | | 30 | 08·05 | 32 | 515·4 | 33 | 634·7 |
| 44 | 533·6 | | | | 10 | 08·59 | 12 | 529·5 | 13 | 703·3 | | 45 | 05·79 | 47 | 513·4 | 48 | 630·9 |
| | | | | | 15 | 08·61 | 17 | 529·8 | | | | 50 | 05·36 | 52 | 511·0 | 53 | 631·4 |
| 47 | 543·6 | 48 | 800·3 | | 30 | 08·18 | 32 | 527·1 | 33 | 698·1 | | 55 | 05·79 | 57 | 507·9 | 58 | 636·9 |
| 49 | 552·1 | | | | 35 | 08·08 | 37 | 523·3 | 38 | 698·2 | 2 13 | 0 | 07·60 | 2 | 509·4 | 3 | 642·3 |
| 52 | 566·8 | 53 | 793·5 | | 40 | 07·60 | 42 | 520·6 | | | | 5 | 09·54 | 7 | 509·1 | 8 | 649·7 |
| 54 | 571·4 | | | | 50 | 08·26 | 52 | 517·4 | 53 | 702·9 | | 10 | 11·30 | 12 | 510·0 | 13 | 652·6 |
| | | | | 29 13 | 0 | 09·86 | 2 | 514·3 | 3 | 711·8 | | 15 | 12·60 | 17 | 510·3 | 18 | 656·4 |
| 57 | 569·2 | 58 | 795·8 | | 10 | 12·01 | 12 | 516·0 | 13 | 716·0 | | 30 | 16·86 | 32 | 515·2 | 33 | 659·8 |
| 59 | 563·3 | | | 29 14 | 0 | 15·76 | 2 | 520·1 | 3 | 721·4 | 2 14 | 0 | 17·34 | 2 | 516·9 | 3 | 652·2 |
| 2 | 554·5 | 3 | 798·7 | | | | | | | | 2 15 | 0 | 15·18 | 2 | 506·5 | 3 | 662·3 |
| 7 | 549·7 | 8 | 796·4 | 30 14 | 0 | 25 23·07 | 2 | 512·4 | 3 | 635·4 | | 25 | 19·51 | 27 | 512·0 | 28 | 661·4 |
| 12 | 545·1 | 13 | 792·1 | | 5 | 23·72 | 7 | 514·0 | 8 | 630·0 | | 30 | 19·69 | 32 | 511·8 | 33 | 658·5 |
| 22 | 543·8 | 23 | 783·5 | | 10 | 23·59 | 12 | 514·0 | 13 | 622·3 | | 45 | 18·72 | 47 | 517·6 | 48 | 654·0 |
| 27 | 534·4 | 28 | 782·1 | | 35 | 20·30 | 37 | 516·0 | 38 | 594·9 | 2 16 | 0 | 17·00 | 2 | 519·1 | 3 | 661·8 |
| 37 | 541·0 | 38 | 775·3 | | 50 | 20·23 | 52 | 514·3 | 53 | 618·7 | 2 18 | 0 | 16·90 | 2 | 511·3 | 3 | 680·0 |
| 47 | 535·8 | 48 | 774·2 | 30 15 | 0 | 19·32 | 2 | 514·1 | 3 | 608·1 | | 10 | 18·77 | 12 | 514·2 | 13 | 676·2 |
| 57 | 532·0 | 58 | 772·1 | | 30 | 16·82 | 32 | 516·3 | 33 | 626·5 | | 15 | 19·84 | 17 | 515·6 | 18 | 673·3 |
| 2 | 531·4 | 3 | 771·1 | 30 16 | 0 | 16·65 | 2 | 524·7 | 3 | 629·0 | | 20 | 20·36 | 22 | 516·4 | 23 | 669·9 |
| 12 | 531·1 | 13 | 767·5 | 30 17 | 0 | 14·73 | 2 | 504·3 | 3 | 657·4 | | 25 | 20·15 | 27 | 518·2 | 28 | 666·6 |

BIFILAR. $k$=0·000140. BALANCE. $k$=0·0000085.

April 29d 11h 0m. The bifilar magnet vibrating 10 divisions.

| Gött. Mean Time. | Declination. | | Bifilar Corrected. | | Balance Corrected. | |
|---|---|---|---|---|---|---|
| d. h. | Min. | ° ′ | Min. | Sc. Div. | Min. | Mic. Div. |
| 2 19 | 0 | 25 19·76 | 2 | 522·5 | 3 | 657·3 |
| 3 4 | 0 | 25 26·32 | 2 | 525·8 | 3 | 737·2 |
| | 35 | 16·53 | 37 | 550·7 | 38 | 765·7 |
| | 40 | 17·46 | 42 | 548·0 | 43 | 768·8 |
| | 45 | 17·70 | 47 | 546·3 | 48 | 772·1 |
| 3 5 | 0 | 17·74 | 2 | 546·1 | 3 | 785·5 |
| 3 6 | 0 | 20·18 | 2 | 542·3 | 3 | 806·0 |
| | 15 | 20·11 | 17 | 541·2 | 18 | 804·0 |
| | | | 30 | 545·5 | | |
| | 45 | 20·38 | 47 | 535·6 | 48 | 803·9 |
| 3 7 | 0 | 18·84 | 2 | 537·5 | 3 | 797·8 |
| 3 8 | 0 | 18·16 | 2 | 526·8 | 3 | 788·0 |
| | 30 | 19·68 | 32 | 528·2 | 33 | 765·3 |
| 3 9 | 0 | 18·43 | 2 | 526·2 | 3 | 749·5 |
| 3 19 | 0 | 25 13·59 | 2 | 517·6 | 3 | 737·1 |
| | 10 | 15·01 | 12 | 518·4 | 13 | 737·3 |
| 3 20 | 0 | 13·57 | 2 | 516·2 | 3 | 742·8 |
| 5 15 | 0 | 25 24·96 | 2 | 529·9 | 3 | 685·7 |
| | 5 | 25·09 | 7 | 532·5 | 8 | 679·3 |
| | 10 | 24·50 | 12 | 533·7 | 13 | 672·7 |
| | 20 | 22·20 | 22 | 534·7 | | |
| | 30 | 18·75 | 32 | 529·4 | 33 | 652·1 |
| | 40 | 15·54 | 42 | 527·9 | 43 | 653·5 |
| | 50 | 13·43 | 52 | 527·3 | 53 | 657·1 |
| 5 16 | 0 | 12·42 | 2 | 530·8 | 3 | 666·1 |
| | 10 | 11·75 | 12 | 527·6 | 13 | 672·9 |
| | 20 | 11·51 | 22 | 525·0 | 23 | 681·0 |
| | 30 | 12·78 | 32 | 523·1 | 33 | 690·1 |
| 5 17 | 0 | 14·84 | 2 | 525·2 | 3 | 703·9 |
| 7 16 | 0 | 25 18·63 | 2 | 503·6 | 3 | 721·4 |
| | 10 | 20·56 | 12 | 497·8 | 13 | 708·3 |
| | 15 | 22·58 | 17 | 494·1 | 18 | 703·7 |
| | 20 | 23·56 | 22 | 492·4 | | |
| | 25 | 24·22 | 27 | 492·4 | 28 | 700·5 |
| | 30 | 24·97 | 32 | 493·8 | 33 | 691·2 |
| | 35 | 27·32 | 37 | 496·0 | 38 | 673·3 |
| | 40 | 28·22 | 42 | 498·2 | 43 | 662·7 |
| | 45 | 26·18 | 47 | 503·1 | 48 | 650·8 |
| | 50 | 24·82 | 52 | 508·8 | 53 | 645·0 |
| | 55 | 23·43 | 57 | 516·9 | 58 | 643·9 |
| 7 17 | 0 | 27·29 | 2 | 516·6 | 3 | 652·9 |
| | 5 | 27·14 | 7 | 521·9 | 8 | 640·1 |
| | 10 | 26·87 | 12 | 525·5 | 13 | 630·9 |
| | 15 | 26·88 | 17 | 526·8 | 18 | 635·1 |
| | 40 | 22·98 | 42 | 534·2 | 43 | 625·1 |
| 7 18 | 0 | 20·85 | 2 | 529·2 | 3 | 626·1 |
| 8 2 | 0 | 25 21·84 | 2 | 513·2 | 3 | 726·3 |
| | | | 38 | 529·0 | | |
| | | | 40 | 509·0 | | |
| | 40 | 22·77 | 42 | 525·1 | 43 | 727·0 |
| 8 3 | 0 | 23·98 | 2 | 527·6 | 3 | 727·3 |
| 8 10 | 0 | 25 16·84 | 2 | 529·5 | 3 | 765·8 |
| | 5 | 12·40 | 7 | 534·1 | 8 | 754·3 |
| | 10 | 11·34 | 12 | 539·0 | 13 | 743·4 |
| | 15 | 12·69 | 17 | 544·6 | 18 | 732·1 |

| Gött. Mean Time. | Declination. | | Bifilar Corrected. | | Balance Corrected. | |
|---|---|---|---|---|---|---|
| d. h. | Min. | ° ′ | Min. | Sc. Div. | Min. | Mic. Div. |
| 8 10 | 20 | 25 12·25 | 22 | 542·1 | 23 | 721·4 |
| | 25 | 14·43 | 27 | 548·0 | 28 | 709·7 |
| | 30 | 17·44 | 32 | 539·4 | 33 | 697·7 |
| | 35 | 18·87 | 37 | 532·0 | 38 | 689·4 |
| | 40 | 18·77 | 42 | 524·2 | 43 | 679·3 |
| | 45 | 17·39 | 47 | 520·4 | 48 | 677·6 |
| | 50 | 14·92 | 52 | 521·1 | 53 | 679·6 |
| 8 11 | 0 | 11·57 | 2 | 516·2 | 3 | 689·1 |
| * | 5 | 06·73 | 7 | 522·4 | 8 | 689·5 |
| | 10 | 06·64 | 12 | 521·6 | 13 | 693·5 |
| | 15 | 08·09 | 17 | 517·1 | 18 | 697·0 |
| | 20 | 08·77 | 22 | 515·8 | 23 | 699·4 |
| | 25 | 09·46 | 27 | 516·2 | 28 | 701·5 |
| | 30 | 10·23 | 32 | 515·2 | 33 | 703·1 |
| | 45 | 12·22 | 47 | 516·1 | 48 | 698·5 |
| | 55 | 11·98 | 57 | 511·3 | 58 | 696·2 |
| 8 12 | 0 | 13·43 | 2 | 505·3 | 3 | 695·9 |
| | 5 | 13·69 | 7 | 501·5 | 8 | 694·3 |
| | 10 | 19·41 | 12 | 495·9 | 13 | 685·3 |
| | 15 | 21·14 | 17 | 497·7 | 18 | 664·2 |
| | 20 | 22·11 | 22 | 500·5 | 23 | 636·7 |
| | 25 | 21·90 | 27 | 500·0 | 28 | 615·9 |
| | 30 | 23·25 | 32 | 504·6 | 33 | 598·7 |
| | 35 | 23·43 | 37 | 511·1 | 38 | 589·6 |
| | 40 | 23·88 | 42 | 510·0 | 43 | 583·6 |
| | 45 | 22·47 | 47 | 513·2 | 48 | 584·6 |
| | 50 | 21·93 | 52 | 514·4 | 53 | 586·6 |
| | 55 | 21·29 | 57 | 515·5 | 58 | 588·5 |
| 8 13 | 0 | 19·59 | 2 | 517·6 | 3 | 593·1 |
| | 15 | 16·84 | 17 | 515·9 | 18 | 592·1 |
| | 30 | 14·51 | 32 | 514·7 | 33 | 593·2 |
| 8 14 | 0 | 15·38 | 2 | 527·0 | 3 | 611·4 |
| 8 15 | 0 | 19·62 | 2 | 519·5 | 3 | 633·8 |
| | 10 | 22·11 | 12 | 521·4 | 13 | 601·6 |
| | 15 | 19·58 | 17 | 528·2 | 18 | 590·8 |
| | 20 | 18·74 | 22 | 532·8 | 23 | 585·6 |
| | 25 | 17·96 | 27 | 531·7 | 28 | 584·8 |
| | 35 | 16·59 | 37 | 526·4 | 38 | 587·4 |
| | 45 | 14·55 | 47 | 520·9 | 48 | 590·9 |
| | 55 | 13·79 | 57 | 518·5 | 58 | 593·6 |
| 8 16 | 0 | 13·61 | 2 | 517·1 | 3 | 593·3 |
| | 10 | 12·75 | 12 | 517·4 | 13 | 601·1 |
| 8 17 | 0 | 13·52 | 2 | 524·5 | 3 | 638·0 |
| 8 19 | 0 | 10·83 | 2 | 523·0 | 3 | 669·3 |
| | 10 | 10·74 | 12 | 522·6 | 13 | 675·2 |
| | 20 | 12·04 | 22 | 521·7 | 23 | 678·8 |
| 8 20 | 0 | 12·92 | 2 | 518·2 | 3 | 688·0 |
| 9 12 | 0 | 25 11·57 | 2 | 519·3 | 3 | 714·3 |
| | 10 | 16·43 | 12 | 524·4 | 13 | 712·0 |
| | 20 | 17·13 | 22 | 524·5 | 23 | 704·4 |
| | 40 | 14·80 | 42 | 522·5 | 43 | 698·0 |
| 9 13 | 0 | 13·84 | 2 | 517·3 | 3 | 701·1 |
| 13 20 | 0 | 25 08·68 | 2 | 528·2 | 3 | 696·4 |
| | 20 | 07·78 | 22 | 522·3 | 23 | 697·3 |
| | 30 | 10·40 | 32 | 522·5 | | |
| 13 21 | 0 | 12·09 | 2 | 515·9 | 3 | 690·7 |
| | 15 | 13·46 | 17 | 523·6 | 18 | 687·0 |
| | 30 | 13·43 | 32 | 520·1 | 33 | 691·8 |
| 13 22 | 0 | 12·78 | 2 | 512·9 | 3 | 691·3 |

| Gött. Mean Time. | Declination. | |
|---|---|---|
| d. h. | Min. | ° ′ |
| 13 22 | 20 | 25 18·72 |
| | 25 | 16·90 |
| | 30 | 18·60 |
| | 35 | 16·65 |
| | 40 | 14·18 |
| | 45 | 16·62 |
| | 50 | 16·41 |
| 13 23 | 0 | 18·81 |
| | 10 | 20·92 |
| | 20 | 21·56 |
| 14 0 | 0 | 24·55 |
| 14 14 | 0 | 25 15·89 |
| | 5 | 16·75 |
| | 10 | 15·39 |
| | 15 | 14·73 |
| | 20 | 13·19 |
| | 25 | 13·34 |
| | 30 | 14·24 |
| | 35 | 13·09 |
| | 45 | 08·88 |
| | 50 | 06·64 |
| | 55 | 03·25 |
| 14 15 | 0 | 01·02 |
| | 5 | 01·58 |
| | 10 | 25 00·65 |
| | 15 | 24 59·84 |
| | 20 | 24 59·63 |
| | 25 | 24 59·95 |
| | 30 | 25 00·30 |
| | 35 | 04·05 |
| | 40 | 04·66 |
| | 45 | 07·42 |
| | 50 | 08·11 |
| | 55 | 09·71 |
| 14 16 | 0 | 11·34 |
| | 5 | 12·58 |
| | 10 | 14·60 |
| | 15 | 15·88 |
| | 20 | 17·39 |
| | 25 | 17·56 |
| | 30 | 18·97 |
| | 35 | 18·70 |
| | 40 | 18·82 |
| | 50 | 18·60 |
| 14 17 | 0 | 16·28 |
| 15 10 | 0 | 25 16·90 |
| | 10 | 19·51 |
| | 20 | 18·81 |
| 15 11 | 0 | 16·12 |
| 17 13 | 0 | 25 12·06 |
| | 20 | 12·06 |
| | 25 | 13·34 |
| | 30 | 14·01 |
| 17 14 | 0 | 14·31 |
| 21 12 | 0 | 25 02·59 |
| * | 5 | 01·56 |

BIFILAR. $k$=0·000140. BALANCE. $k$=0·0000085.

* See notes on the Aurora Borealis, *after* the *Extra Observations of Magnetometers.*

| Bifilar Corrected. | | Balance Corrected. | | Gött. Mean Time. | Declination. | | Bifilar Corrected. | | Balance Corrected. | | Gött. Mean Time. | Declination. | | Bifilar Corrected. | | Balance Corrected. | |
|---|---|---|---|---|---|---|---|---|---|---|---|---|---|---|---|---|---|
| Min. | Sc. Div. | Min. | Mic. Div. | d. h. | Min. | ° ′ | Min. | Sc. Div. | Min. | Mic. Div. | d. h. | Min. | ° ′ | Min. | Sc. Div. | Min. | Mic. Div. |
| 22 | 513·7 | 23 | 691·4 | 21 12 | 10 | 24 59·97 | 12 | 523·3 | 13 | 674·9 | 22 12 | 40 | 25 12·56 | 42 | 494·6 | 43 | 484·4 |
| 27 | 520·4 | 28 | 683·6 | | 15 | 25 00·00 | 17 | 523·4 | 18 | 677·7 | | 45 | 10·13 | 47 | 511·6 | 48 | 452·8 |
| 32 | 522·0 | 33 | 679·7 | | 20 | 00·30 | 22 | 526·0 | 23 | 681·4 | | 50 | 08·38 | 52 | 518·9 | 53 | 442·4 |
| 37 | 519·4 | 38 | 674·7 | | 25 | 00·24 | 27 | 532·6 | | | | 55 | 06·48 | 57 | 526·0 | 58 | 446·5 |
| 42 | 520·6 | 43 | 671·7 | | 30 | 02·59 | 32 | 533·9 | 33 | 678·8 | 22 13 | 0 | 25 01·09 | 2 | 522·0 | 3 | 445·8 |
| 47 | 515·2 | 48 | 675·4 | | 35 | 07·42 | 37 | 529·5 | 38 | 675·6 | | 5 | 24 56·60 | 7 | 519·3 | 8 | 451·9 |
| 52 | 510·0 | 53 | 678·4 | | 40 | 09·05 | 42 | 523·3 | 43 | 673·6 | | 10 | 51·43 | 12 | 517·1 | 13 | 466·3 |
| 2 | 503·4 | 3 | 687·2 | | 45 | 09·47 | 47 | 519·8 | 48 | 669·1 | | 15 | 48·11 | 17 | 518·7 | 18 | 482·0 |
| 12 | 511·0 | 13 | 688·5 | 21 13 | 0 | 09·64 | 2 | 522·7 | 3 | 656·1 | | 20 | 47·93 | 22 | 512·5 | 23 | 500·2 |
| 22 | 517·2 | | | | 15 | 11·35 | 17 | 525·4 | 18 | 653·0 | | 25 | 48·40 | 27 | 514·4 | 28 | 509·7 |
| 2 | 509·1 | 3 | 693·4 | | 40 | 12·78 | 42 | 524·7 | 43 | 661·9 | | 30 | 51·88 | 32 | 506·0 | 33 | 510·4 |
| | | | | 21 14 | 0 | 12·02 | 2 | 526·5 | 3 | 666·7 | | 35 | 54·68 | 37 | 505·0 | 38 | 513·0 |
| 2 | 517·2 | 3 | 613·1 | | | | | | | | | 40 | 54·70 | 42 | 506·3 | 43 | 516·7 |
| 7 | 532·3 | 8 | 609·2 | 22 5 | 0 | 25 25·70 | 2 | 550·1 | 3 | 692·3 | | 45 | 55·17 | 47 | 512·8 | 48 | 522·6 |
| 12 | 526·8 | 13 | 602·0 | | 10 | 24·35 | 12 | 542·5 | 13 | 696·8 | | 50 | 57·17 | 52 | 517·0 | 53 | 527·7 |
| 17 | 521·9 | 18 | 593·8 | | 15 | 24·28 | 17 | 535·9 | | | | 55 | 24 59·46 | 57 | 519·9 | 58 | 525·4 |
| 22 | 524·7 | 23 | 587·4 | | 55 | 23·54 | 57 | 543·8 | 58 | 697·9 | 22 14 | 0 | 25 00·00 | 2 | 523·1 | 3 | 530·0 |
| 27 | 524·0 | 28 | 585·0 | 22 6 | 0 | 23·68 | 2 | 546·0 | 3 | 697·7 | | 5 | 02·08 | 7 | 520·4 | 8 | 532·8 |
| 32 | 522·7 | 33 | 572·9 | | 10 | 23·07 | 12 | 547·4 | | | | 10 | 02·82 | 12 | 520·0 | 13 | 544·9 |
| 37 | 519·0 | 38 | 553·5 | | 20 | 22·87 | 22 | 550·5 | 23 | 696·3 | | 15 | 03·13 | 17 | 521·1 | 18 | 555·7 |
| 42 | 522·2 | 43 | 534·9 | | 25 | 22·94 | 27 | 552·2 | | | | 30 | 06·73 | 32 | 516·9 | 33 | 574·5 |
| 47 | 521·2 | 48 | 524·9 | | | | 28 | 554·5 | | | | 40 | 09·17 | 42 | 512·3 | 43 | 595·3 |
| 52 | 522·5 | 53 | 519·6 | | 30 | 22·94 | 32 | 552·4 | 33 | 697·9 | | 50 | 12·70 | 52 | 511·0 | 53 | 616·5 |
| 57 | 525·5 | 58 | 520·1 | | | | 34 | 550·3 | | | 22 15 | 0 | 15·04 | 2 | 514·5 | 3 | 622·8 |
| 2 | 522·1 | 3 | 527·9 | | | | 37 | 552·2 | | | | 10 | 16·28 | 12 | 514·3 | 13 | 623·1 |
| 7 | 521·3 | 8 | 533·3 | | | | 39 | 550·6 | | | | 40 | 17·96 | 42 | 521·1 | 43 | 630·7 |
| 12 | 523·6 | 13 | 545·5 | | 40 | 22·31 | 42 | 553·4 | 43 | 698·0 | 22 16 | 0 | 16·15 | 2 | 526·5 | 3 | 647·3 |
| 17 | 522·4 | 18 | 541·6 | | | | 46 | 557·0 | | | | 35 | 20·06 | 37 | 497·7 | 38 | 636·2 |
| 22 | 518·9 | 23 | 546·2 | | | | 49 | 557·2 | | | | 40 | 22·50 | 42 | 485·8 | 43 | 619·9 |
| 27 | 517·9 | 28 | 551·0 | | 50 | 23·07 | 53 | 549·3 | | | | 45 | 24·67 | 47 | 476·4 | 48 | 592·5 |
| 32 | 518·0 | 33 | 553·8 | | 55 | 22·74 | | | | | | 50 | 27·56 | 52 | 473·7 | 53 | 558·6 |
| 37 | 514·2 | 38 | 546·0 | 22 7 | 0 | 21·56 | 2 | 552·2 | 3 | 703·0 | | 55 | 28·63 | 57 | 477·6 | 58 | 547·4 |
| 42 | 512·0 | 43 | 545·0 | 22 8 | 0 | 19·73 | 2 | 545·9 | 3 | 722·5 | 22 17 | 0 | 27·58 | 2 | 487·1 | 3 | 524·3 |
| 47 | 503·3 | 48 | 541·3 | 22 9 | 0 | 09·29 | 2 | 538·7 | 3 | 743·8 | | 5 | 31·06 | 7 | 483·4 | 8 | 508·6 |
| 52 | 498·6 | 53 | 536·1 | | 20 | 11·05 | 22 | 530·8 | 23 | 748·6 | | 10 | 30·08 | 12 | 490·0 | 13 | 508·9 |
| 57 | 498·6 | 58 | 539·5 | | 30 | 12·56 | 32 | 537·0 | 33 | 743·1 | | 15 | 29·93 | 17 | 495·3 | 18 | 505·3 |
| 2 | 496·8 | 3 | 545·3 | | 40 | 14·40 | 42 | 531·7 | 43 | 735·2 | | 20 | 30·10 | 22 | 492·8 | 23 | 510·5 |
| 7 | 492·4 | 8 | 550·2 | | 50 | 14·03 | 52 | 532·0 | 53 | 730·9 | | 25 | 29·29 | 27 | 497·2 | 28 | 519·3 |
| 12 | 494·6 | 13 | 552·3 | 22 10 | 0 | 09·74 | 2 | 540·6 | 3 | 724·2 | | 30 | 27·84 | 32 | 504·2 | 33 | 531·9 |
| 17 | 499·5 | 18 | 549·6 | | 10 | 10·65 | 12 | 529·7 | 13 | 729·9 | | 35 | 29·39 | 37 | 517·0 | 38 | 539·2 |
| 22 | 501·1 | 23 | 549·2 | | 20 | 09·93 | 22 | 536·0 | 23 | 725·7 | | 40 | 26·23 | 42 | 509·9 | 43 | 546·8 |
| 27 | 505·7 | 28 | 555·3 | | 30 | 12·95 | 32 | 532·0 | 33 | 724·3 | | 45 | 25·74 | 47 | 512·6 | 48 | 545·2 |
| 32 | 506·0 | 33 | 564·8 | | 40 | 15·02 | 42 | 529·8 | 43 | 720·6 | | 50 | 23·52 | 52 | 515·2 | 53 | 546·8 |
| 37 | 511·8 | 38 | 573·8 | 22 11 | 0 | 14·67 | 2 | 525·9 | 3 | 705·1 | | 55 | 23·46 | 57 | 521·7 | 58 | 556·6 |
| 42 | 513·6 | 43 | 581·5 | * | 10 | 12·02 | 12 | 529·9 | 13 | 696·7 | 22 18 | 0 | 25·04 | 2 | 518·8 | 3 | 563·7 |
| 52 | 518·1 | 53 | 592·6 | | 20 | 10·28 | 22 | 527·4 | 23 | 688·7 | | 5 | 24·57 | 7 | 518·8 | 8 | 567·7 |
| 2 | 521·2 | 3 | 604·3 | | 25 | 08·63 | 27 | 529·7 | 28 | 685·1 | | 15 | 24·45 | 17 | 519·9 | 18 | 572·2 |
| | | | | | 30 | 08·31 | 32 | 529·6 | 33 | 683·3 | | 30 | 20·60 | 32 | 520·1 | 33 | 584·2 |
| 2 | 542·5 | 3 | 701·8 | | 35 | 09·42 | 37 | 532·5 | 38 | 678·7 | 22 19 | 0 | 15·92 | 2 | 513·7 | 3 | 627·5 |
| 12 | 541·6 | 13 | 693·1 | | 40 | 11·64 | 42 | 530·3 | | | | 10 | 14·46 | 12 | 512·2 | 13 | 638·7 |
| 22 | 534·8 | 23 | 692·1 | | 45 | 13·44 | 47 | 529·3 | 48 | 670·3 | | | | | | 14½ | 634·0 |
| 2 | 530·2 | 3 | 676·7 | | 50 | 13·39 | 52 | 527·2 | 53 | 663·6 | | 15 | 14·11 | 17 | 512·9 | 18 | 638·1 |
| | | | | | 55 | 14·21 | 57 | 524·1 | 58 | 659·5 | | 40 | 13·90 | 42 | 502·9 | 43 | 652·2 |
| 2 | 525·3 | 3 | 714·4 | 22 12 | 0 | 15·99 | 2 | 520·2 | 3 | 649·8 | 22 20 | 0 | 13·37 | 2 | 505·8 | 3 | 663·3 |
| 22 | 524·6 | 23 | 718·2 | | 5 | 16·80 | 7 | 513·8 | 8 | 643·5 | 22 21 | 0 | 17·46 | 2 | 505·8 | 3 | 669·0 |
| 27 | 525·0 | 28 | 717·2 | | 10 | 15·81 | 12 | 512·3 | 13 | 632·2 | | 24 | 17·36 | 25 | 510·5 | 25 | 675·1 |
| 32 | 527·2 | 33 | 718·0 | | 15 | 13·19 | 17 | 511·7 | 18 | 622·6 | 22 22 | 0 | 17·17 | 2 | 513·6 | 3 | 674·1 |
| 2 | 527·0 | 3 | 715·7 | | 20 | 13·54 | 22 | 500·9 | 23 | 614·2 | | | | | | | |
| | | | | | 25 | 15·78 | 27 | 499·2 | 28 | 592·6 | 23 7 | 0 | 25 19·44 | 2 | 550·6 | 3 | 725·2 |
| 2 | 525·3 | 3 | 673·5 | | 30 | 17·80 | 32 | 499·1 | 33 | 576·8 | | | | 24 | 566·1 | | |
| 7 | 521·5 | 8 | 673·8 | | 35 | 16·55 | 37 | 500·3 | 38 | 538·8 | | 35 | 12·16 | 37 | 564·0 | 38 | 711·4 |

BIFILAR. $k$=0·000140. BALANCE. $k$=0·0000085.

* See notes on the Aurora Borealis, *after* the *Extra Observations of Magnetometers*.

| Gött. Mean Time. | Declination. | | Bifilar Corrected. | | Balance Corrected. | |
|---|---|---|---|---|---|---|
| d. h. | Min. | ° ′ | Min. | Sc. Div. | Min. | Mic. Div. |
| 23 7 | 40 | 25 11·37 | 42 | 563·5 | | |
| | 45 | 12·04 | 47 | 557·0 | 48 | 712·8 |
| | 50 | 10·74 | 52 | 557·3 | | |
| | 55 | 10·80 | 57 | 562·9 | 58 | 713·8 |
| 23 8 | 0 | 15·44 | 2 | 550·5 | 3 | 716·5 |
| | 5 | 15·07 | 7 | 540·3 | 8 | 717·2 |
| | 10 | 14·13 | 12 | 537·1 | | |
| 23 9 | 0 | 16·89 | 2 | 534·6 | 3 | 710·6 |
| 23 11 | 0 | 15·54 | 2 | 531·8 | 3 | 698·0 |
| | 10 | 13·90 | 12 | 537·1 | 13 | 688·3 |
| | 15 | 14·64 | 17 | 537·0 | 18 | 682·7 |
| | 20 | 14·70 | 22 | 533·7 | 23 | 683·6 |
| | 40 | 15·01 | 42 | 527·0 | 43 | 686·3 |
| 23 12 | 0 | 12·72 | 2 | 531·8 | 3 | 691·5 |
| | 5 | 12·06 | 7 | 537·0 | 8 | 695·9 |
| | 10 | 12·82 | 12 | 537·2 | 13 | 692·1 |
| | 25 | 14·46 | 27 | 532·3 | 28 | 682·8 |
| 23 13 | 0 | 13·50 | 2 | 521·9 | 3 | 706·3 |
| | 30 | 14·35 | 32 | 523·3 | 33 | 686·0 |
| 23 14 | 0 | 17·10 | 2 | 520·4 | 3 | 697·8 |
| 24 5 | 0 | 25 17·36 | 2 | 546·8 | 3 | 708·6 |
| | 10 | 16·01 | 12 | 555·9 | 13 | 711·0 |
| | 15 | 14·51 | 17 | 554·0 | | |
| | 25 | 13·72 | 27 | 557·2 | 28 | 712·2 |
| | 30 | 14·18 | 32 | 556·3 | | |
| | 35 | 12·22 | 37 | 556·2 | 38 | 713·7 |
| 24 6 | 0 | 18·13 | 2 | 551·4 | 3 | 721·6 |
| 27 8 | 0 | 25 10·11 | 2 | 547·8 | 3 | 716·8 |
| | 5 | 10·70 | 7 | 550·1 | | |
| | 10 | 11·51 | 12 | 551·0 | 13 | 716·8 |
| | 15 | 12·83 | 17 | 549·1 | | |
| | 25 | 14·06 | 27 | 543·5 | 28 | 716·2 |
| | 40 | 14·13 | 42 | 537·3 | 43 | 718·9 |
| 27 9 | 0 | 15·38 | 2 | 536·9 | 3 | 716·8 |
| 27 10 | 0 | 13·96 | 2 | 531·4 | 3 | 710·9 |
| | 10 | 12·92 | 12 | 531·1 | 13 | 709·2 |
| | 15 | 12·29 | 17 | 531·3 | | |
| 27 11 | 0 | 12·51 | 2 | 524·2 | 3 | 697·7 |
| 27 15 | 0 | 10·31 | 2 | 526·4 | 3 | 661·0 |
| | 20 | 10·03 | 22 | 525·1 | 23 | 664·0 |
| 27 16 | 0 | 12·00 | 2 | 527·9 | 3 | 667·5 |
| 28 9 | 0 | 25 12·56 | 2 | 545·5 | 3 | 712·7 |
| | 20 | 15·52 | 22 | 535·4 | 23 | 711·0 |
| | 30 | 15·24 | 32 | 538·7 | | |
| | 45 | 14·73 | 47 | 542·0 | 48 | 703·4 |
| 28 10 | 0 | 14·10 | 2 | 534·6 | 3 | 702·1 |
| 1 11 | 0 | 25 11·15 | 2 | 541·1 | 3 | 688·6 |
| | 5 | 10·65 | 7 | 542·7 | 8 | 689·5 |
| | 10 | 10·80 | 12 | 544·0 | | |
| | 20 | 11·15 | 22 | 546·8 | 23 | 688·9 |
| | 35 | 11·44 | 37 | 546·3 | 38 | 687·6 |
| 1 12 | 0 | 12·75 | 2 | 540·1 | 3 | 689·4 |
| 2 15 | 0 | 25 13·83 | 2 | 529·5 | 3 | 710·9 |
| | 5 | 12·78 | | | | |
| | 10 | 12·92 | 12 | 530·2 | 13 | 707·2 |
| | 15 | 12·22 | 17 | 530·7 | 18 | 708·8 |

| Gött. Mean Time. | Declination. | | Bifilar Corrected. | | Balance Corrected. | |
|---|---|---|---|---|---|---|
| d. h. | Min. | ° ′ | Min. | Sc. Div. | Min. | Mic. Div. |
| 2 15 | 20 | 25 14·80 | | | | |
| | 30 | 14·60 | | | | |
| 2 16 | 0 | 17·49 | 2 | 524·2 | 3 | 710·0 |
| | 15 | 18·13 | 17 | 524·2 | | |
| 2 17 | 0 | 15·99 | 2 | 530·6 | 3 | 694·3 |
| 8 11 | 0 | 25 13·46 | 2 | 535·7 | 3 | 691·0 |
| | 15 | 11·98 | 17 | 538·2 | | |
| 8 12 | 0 | 15·15 | 2 | 533·7 | 3 | 689·4 |
| 10 14 | 0 | 25 16·10 | 2 | 529·1 | 3 | 662·4 |
| | 10 | 16·99 | 12 | 538·6 | 13 | 653·3 |
| | 15 | 19·37 | 17 | 532·5 | 18 | 650·2 |
| | 20 | 20·92 | 22 | 530·0 | 23 | 645·8 |
| | 25 | 22·22 | 27 | 527·0 | 28 | 641·9 |
| | 30 | 22·33 | 32 | 523·6 | 33 | 637·4 |
| | 35 | 21·66 | 37 | 520·8 | 38 | 633·2 |
| | 40 | 20·47 | 42 | 519·4 | | |
| | 55 | 17·47 | 57 | 518·0 | 58 | 627·8 |
| 10 15 | 0 | 17·10 | 2 | 526·6 | 3 | 628·4 |
| 11 13 | 0 | 25 15·94 | 2 | 531·3 | 3 | 698·2 |
| | 30 | 16·28 | 33 | 530·2 | 33 | 690·9 |
| 11 14 | 0 | 16·72 | 2 | 532·9 | 3 | 691·0 |
| | 35 | 15·41 | 37 | 529·7 | 38 | 691·4 |
| 11 15 | 0 | 15·44 | 2 | 529·3 | 3 | 691·1 |
| 12 13 | 0 | 25 16·95 | 2 | 534·7 | 3 | 688·5 |
| | 30 | 16·82 | 32 | 533·8 | 33 | 688·9 |
| 12 14 | 0 | 16·73 | 2 | 531·7 | 3 | 690·4 |
| 12 15 | 0 | 18·95 | 2 | 533·8 | 3 | 686·2 |
| | 10 | 18·70 | 12 | 534·4 | 13 | 683·6 |
| | 25 | 17·36 | | | | |
| 12 16 | 0 | 16·32 | 2 | 532·2 | 3 | 682·9 |
| 13 11 | 0 | 25 12·70 | 2 | 537·4 | 3 | 682·2 |
| | 10 | 13·49 | 12 | 534·3 | 13 | 683·2 |
| | 30 | 14·60 | 32 | 535·8 | 33 | 683·0 |
| 13 12 | 0 | 14·94 | 2 | 534·3 | 3 | 681·7 |
| 13 13 | 0 | 14·77 | 2 | 533·4 | 3 | 677·3 |
| | 30 | 14·58 | 32 | 535·4 | 33 | 678·4 |
| 13 14 | 0 | 14·77 | 2 | 533·3 | 3 | 672·2 |
| | 30 | 14·82 | 32 | 535·6 | 33 | 678·1 |
| 13 15 | 0 | 12·72 | 2 | 530·6 | 3 | 671·6 |
| 16 13 | 0 | 25 24·30 | 2 | 540·9 | 3 | 639·1 |
| | 5 | 24·22 | 7 | 543·1 | 8 | 629·9 |
| | 10 | 23·32 | 12 | 544·3 | 13 | 621·4 |
| | 15 | 21·68 | 17 | 547·5 | 18 | 611·7 |
| | 20 | 20·43 | 22 | 547·4 | 23 | 604·0 |
| | 25 | 19·02 | 27 | 547·2 | 28 | 596·1 |
| | 30 | 16·45 | 32 | 542·2 | 33 | 592·0 |
| | 35 | 12·73 | 37 | 535·3 | 38 | 593·1 |
| | 40 | 10·94 | 42 | 535·3 | 43 | 591·7 |
| | 45 | 11·61 | 47 | 537·0 | 48 | 586·1 |
| | 50 | 10·74 | 52 | 528·0 | 53 | 582·8 |
| | 55 | 07·65 | 57 | 522·6 | 58 | 584·8 |
| 16 14 | 0 | 06·34 | 2 | 523·9 | 3 | 588·7 |
| | 5 | 05·43 | 7 | 524·4 | 8 | 590·7 |
| | 10 | 04·64 | 12 | 520·9 | 13 | 597·4 |
| | 15 | 03·63 | 17 | 518·7 | 18 | 608·6 |

| Gött. Mean Time. | Declination. | |
|---|---|---|
| d. h. | Min. | ° ′ |
| 16 14 | 20 | 25 04·48 |
| | 25 | 05·96 |
| | 30 | 06·71 |
| | 35 | 08·08 |
| | 40 | 09·12 |
| | 45 | 09·42 |
| | 50 | 08·58 |
| | 55 | 09·37 |
| 16 15 | 0 | 09·56 |
| 16 16 | 0 | 10·09 |
| 16 17 | 0 | 09·89 |
| | 10 | 10·65 |
| | 15 | 11·84 |
| | 20 | 12·09 |
| | 25 | 13·27 |
| | 30 | 13·93 |
| | 35 | 15·74 |
| | 40 | 16·52 |
| | 45 | 16·93 |
| | 50 | 18·21 |
| | 55 | 17·91 |
| 16 18 | 0 | 17·27 |
| | 10 | 16·90 |
| | 15 | 14·62 |
| | 20 | 13·50 |
| | 25 | 12·36 |
| | 30 | 11·10 |
| | 35 | 11·74 |
| 16 19 | 0 | 12·60 |
| | 15 | 12·72 |
| | 20 | 11·79 |
| | 25 | 11·30 |
| | 30 | 13·86 |
| | 40 | 14·67 |
| | 45 | 15·42 |
| | 50 | 13·99 |
| 16 20 | 0 | 13·17 |
| | 15 | 13·20 |
| | 30 | 09·00 |
| | 40 | 12·92 |
| | 50 | 14·64 |
| 16 21 | 0 | 15·54 |
| 17 13 | 0 | 25 13·05 |
| | 15 | 15·94 |
| | 35 | 18·34 |
| | 40 | 18·30 |
| 17 14 | 0 | 24·94 |
| | 5 | 24·96 |
| | 10 | 23·07 |
| | 20 | 20·05 |
| | 40 | 16·99 |
| 17 15 | 0 | 15·59 |
| 18 1 | 0 | 25 21·53 |
| | 30 | 24·03 |
| 18 2 | 0 | 22·82 |
| 18 11 | 0 | 25 19·01 |
| | 10 | 21·56 |
| | 15 | 20·63 |

BIFILAR. $k$=0·000140. BALANCE. $k$=0·0000085.

May 23$^d$ 13$^h$ 30$^m$. The magnets seem to have been slightly disturbed all day.
May 28$^d$ 9$^h$—10$^h$. The magnet with short scale used in the declinometer.
June 17$^d$ 10$^h$. The magnets have been unsteady throughout the day.
June 17$^d$ 13$^h$. There seems to have been a slight disturbance after this.

| Bifilar Corrected. | | Balance Corrected. | | Gött. Mean Time. | Declination. | | Bifilar Corrected. | | Balance Corrected. | | Gött. Mean Time. | Declination. | | Bifilar Corrected. | | Balance Corrected. | |
|---|---|---|---|---|---|---|---|---|---|---|---|---|---|---|---|---|---|
| Min. | Sc. Div. | Min. | Mic. Div. | d. h. | Min. | ° ′ | Min. | Sc. Div. | Min. | Mic. Div. | d. h. | Min. | ° ′ | Min. | Sc. Div. | Min. | Mic. Di |
| 22 | 523·8 | 23 | 616·3 | 18 11 | 20 | 25 18·90 | 22 | 530·0 | 23 | 651·1 | 28 18 | 35 | 25 08·31 | 37 | 529·6 | 38 | 654· |
| 27 | 525·2 | 28 | 622·8 | | 25 | 17·49 | 27 | 529·1 | 28 | 650·8 | | 40 | 06·81 | 42 | 533·3 | 43 | 653· |
| 32 | 528·7 | 33 | 627·1 | | 30 | 17·02 | 32 | 529·5 | | | | 45 | 07·81 | 47 | 530·3 | 48 | 652· |
| 37 | 531·9 | 38 | 632·2 | | 45 | 21·56 | 47 | 527·1 | 48 | 658·8 | | 50 | 07·20 | 52 | 534·6 | 53 | 651· |
| 42 | 535·5 | 43 | 632·4 | 18 12 | 0 | 12·06 | 2 | 530·4 | 3 | 664·4 | | 55 | 08·03 | 57 | 532·6 | 58 | 655· |
| 47 | 534·3 | 48 | 633·0 | | 10 | 11·61 | 12 | 532·5 | 13 | 668·8 | 28 19 | 0 | 08·82 | 2 | 532·0 | 3 | 655· |
| 52 | 534·3 | 53 | 635·1 | | 20 | 12·11 | 22 | 529·2 | 23 | 671·2 | | 10 | 08·34 | 12 | 531·8 | 13 | 663· |
| 57 | 525·9 | 58 | 636·6 | | 30 | 12·80 | 32 | 530·8 | 33 | 673·1 | | 20 | 07·94 | 22 | 531·6 | 23 | 661· |
| 2 | 536·3 | 3 | 637·8 | 18 13 | 0 | 14·20 | 2 | 531·0 | 3 | 680·1 | | 40 | 10·87 | 42 | 530·0 | 43 | 660· |
| 2 | 532·3 | 3 | 674·3 | | 30 | 14·35 | 32 | 532·8 | 33 | 681·7 | 28 20 | 0 | 11·35 | 2 | 528·6 | 3 | 661· |
| 2 | 521·6 | 3 | 677·1 | 18 14 | 0 | 14·70 | 2 | 533·4 | 3 | 690·1 | | 20 | 10·87 | 22 | 525·5 | 23 | 662· |
| 12 | 514·8 | 13 | 679·9 | | 30 | 13·36 | 32 | 530·6 | 33 | 690·4 | 28 21 | 0 | 08·95 | 2 | 525·5 | 3 | 658· |
| 17 | 514·2 | 18 | 677·5 | 18 15 | 0 | 13·86 | 2 | 530·4 | 3 | 691·8 | | 20 | 08·97 | 22 | 522·4 | 23 | 657· |
| 22 | 516·7 | 23 | 683·7 | | | | | | | | | 30 | 12·38 | 32 | 516·5 | 33 | 661· |
| 27 | 518·5 | 28 | 691·1 | 20 13 | 0 | 25 13·37 | 2 | 539·8 | 3 | 671·5 | | 35 | 13·37 | 37 | 517·9 | 38 | 656· |
| 32 | 521·0 | 33 | 696·4 | | 30 | 14·46 | | | | | | 40 | 13·43 | 42 | 513·1 | 43 | 657· |
| 37 | 522·8 | 38 | 690·5 | 20 14 | 0 | 10·92 | 2 | 531·2 | 3 | 669·5 | | 45 | 12·93 | 47 | 513·7 | 48 | 658· |
| 42 | 524·1 | 43 | 690·6 | | 30 | 12·18 | 32 | 532·2 | | | | 50 | 13·93 | 52 | 512·3 | | |
| 47 | 525·9 | 48 | 687·9 | 20 15 | 0 | 16·28 | 2 | 529·1 | 3 | 667·4 | | 55 | 15·86 | 57 | 512·0 | 58 | 661· |
| 52 | 525·7 | 53 | 683·9 | | 15 | 16·62 | 17 | 531·7 | | | 28 22 | 0 | 17·40 | 2 | 512·6 | 3 | 662· |
| 57 | 525·4 | 58 | 682·9 | | 45 | 13·66 | 47 | 536·7 | 48 | 659·1 | | 5 | 18·43 | 7 | 515·8 | 8 | 656· |
| 2 | 527·4 | 3 | 678·3 | | 50 | 11·57 | 52 | 536·3 | 53 | 657·7 | | 10 | 19·15 | 12 | 517·2 | 13 | 654· |
| 12 | 525·7 | 13 | 673·3 | | 55 | 11·30 | 57 | 534·0 | | | | 15 | 16·99 | 17 | 512·9 | 18 | 653· |
| 17 | 527·4 | 18 | 679·4 | 20 16 | 0 | 10·92 | 2 | 533·4 | 3 | 659·9 | | 20 | 15·61 | 22 | 513·5 | | |
| 22 | 521·3 | 23 | 680·2 | | 5 | 11·61 | 7 | 533·1 | | | | 25 | 15·01 | 27 | 516·8 | 28 | 649· |
| 27 | 522·1 | 28 | 677·7 | | 15 | 10·83 | 17 | 535·8 | | | | 30 | 15·76 | 32 | 516·7 | | |
| 32 | 524·1 | 33 | 681·8 | | 35 | 08·34 | 37 | 538·0 | | | 28 23 | 0 | 18·60 | 2 | 515·4 | 3 | 650· |
| 37 | 524·5 | 38 | 680·7 | | 40 | 07·76 | 42 | 537·4 | 43 | 656·5 | | | | | | | |
| 2 | 521·8 | 3 | 674·4 | | 45 | 08·65 | 47 | 535·9 | | | 29 10 | 0 | 25 13·05 | 2 | 540·6 | 3 | 652· |
| 17 | 513·1 | 18 | 677·3 | | 50 | 08·52 | 52 | 534·4 | | | | 30 | 13·56 | 32 | 532·1 | 33 | 656· |
| 22 | 508·9 | 23 | 674·7 | 20 17 | 0 | 07·98 | 2 | 530·9 | 3 | 659·3 | 29 11 | 0 | 14·98 | 2 | 533·6 | 3 | 656· |
| 27 | 517·2 | 28 | 672·6 | | 25 | 08·16 | 27 | 530·9 | 28 | 663·3 | | | | | | | |
| 32 | 518·2 | 33 | 675·6 | 20 18 | 0 | 08·26 | 2 | 529·9 | 3 | 670·0 | 30 16 | 0 | 25 20·18 | 2 | 527·8 | 3 | 648· |
| 42 | 519·1 | 43 | 677·9 | | | | | | | | | 10 | 19·48 | 12 | 531·3 | 13 | 644· |
| 47 | 518·8 | 48 | 675·8 | 21 12 | 0 | 25 12·75 | 2 | 523·7 | 3 | 688·6 | | 15 | 19·73 | 17 | 532·8 | 18 | 648· |
| 52 | 518·4 | 53 | 670·6 | | 30 | 12·72 | 32 | 527·8 | 33 | 685·4 | | 25 | 18·16 | 27 | 532·6 | 28 | 646· |
| 2 | 518·5 | 3 | 675·7 | 21 13 | 0 | 13·17 | 2 | 527·5 | 3 | 687·4 | | 45 | 14·67 | 47 | 530·1 | 48 | 638· |
| 17 | 518·3 | 18 | 674·9 | | 15 | 15·91 | 17 | 536·9 | 18 | 677·2 | | 50 | 14·06 | 52 | 529·9 | 53 | 639· |
| 32 | 515·4 | 33 | 673·4 | | 30 | 15·24 | 32 | 533·6 | 33 | 670·7 | | 55 | 13·41 | 57 | 529·8 | 58 | 647· |
| 42 | 518·7 | 43 | 686·0 | 21 14 | 0 | 14·51 | 2 | 535·8 | 3 | 660·9 | 30 17 | 0 | 13·30 | 2 | 529·0 | 3 | 658· |
| 52 | 518·8 | 53 | 684·6 | | | | | | | | | 5 | 12·78 | 7 | 528·6 | 8 | 663· |
| 2 | 519·4 | 3 | 682·4 | 26 9 | 0 | 25 13·43 | 2 | 547·8 | 3 | 669·5 | | 10 | 12·18 | 12 | 528·5 | 13 | 666· |
| | | | | | 15 | 14·13 | 17 | 538·8 | 18 | 669·8 | | 15 | 12·06 | 17 | 527·9 | 18 | 662· |
| 2 | 532·7 | 3 | 683·2 | 26 10 | 0 | 13·50 | 2 | 535·0 | 3 | 667·3 | | 20 | 11·59 | 22 | 527·5 | 23 | 661 |
| 17 | 535·8 | | | | | | | | | | | 25 | 11·21 | 27 | 527·0 | 28 | 672 |
| 37 | 531·3 | | | 28 14 | 0 | 25 16·50 | 2 | 546·1 | 3 | 651·2 | | 30 | 10·14 | 32 | 527·1 | 33 | 667 |
| | | | | | 35 | 16·25 | 37 | 546·7 | 38 | 650·1 | | 35 | 10·13 | 37 | 526·3 | 38 | 670 |
| 2 | 531·7 | 3 | 661·5 | 28 15 | 0 | 14·77 | 2 | 536·7 | 3 | 649·7 | | 50 | 10·13 | 52 | 525·6 | 53 | 667 |
| 7 | 532·1 | 8 | 652·7 | | | | 17 | 542·0 | | | 30 18 | 0 | 10·03 | 2 | 525·2 | 3 | 667 |
| 12 | 533·8 | 13 | 645·6 | | 20 | 16·72 | 22 | 539·3 | 23 | 648·3 | | 20 | 09·42 | 22 | 524·8 | 23 | 664 |
| 22 | 534·6 | 23 | 641·6 | | 25 | 14·37 | 27 | 539·2 | 28 | 648·8 | 30 19 | 0 | 09·42 | 2 | 524·1 | 3 | 672 |
| 42 | 535·6 | 43 | 646·6 | | 30 | 14·68 | 32 | 538·4 | 33 | 650·5 | | | | | | | |
| 2 | 535·7 | 3 | 653·6 | | 40 | 15·31 | 42 | 537·9 | 43 | 652·7 | | | | | | | |
| | | | | 28 16 | 0 | 14·20 | 2 | 537·3 | 3 | 655·5 | 1 11 | 0 | 25 14·91 | 2 | 534·1 | 3 | 661 |
| 2 | 534·1 | 3 | 673·2 | 28 18 | 0 | 06·06 | 2 | 530·8 | 3 | 656·5 | | 30 | 15·94 | 32 | 536·0 | 33 | 658 |
| 32 | 537·3 | 33 | 677·7 | | 5 | 06·66 | 7 | 528·9 | 8 | 657·3 | 1 12 | 0 | 15·51 | 2 | 534·1 | 3 | 658 |
| 2 | 534·5 | 3 | 682·7 | | 10 | 07·38 | 12 | 527·2 | | | 1 14 | 0 | 16·39 | 2 | 536·3 | 3 | 649 |
| | | | | | 15 | 06·37 | 17 | 531·6 | 18 | 660·5 | | 15 | 19·31 | 17 | 535·1 | 18 | 646 |
| 2 | 552·7 | 3 | 666·5 | | 20 | 09·64 | 22 | 531·3 | 23 | 657·2 | | 30 | 18·25 | 32 | 535·0 | 33 | 645 |
| 12 | 536·7 | 13 | 657·8 | | 25 | 10·83 | 27 | 527·0 | 28 | 656·7 | | 45 | 17·22 | | | | |
| 17 | 529·7 | 18 | 654·6 | | 30 | 09·26 | 32 | 527·3 | 33 | 654·8 | 1 15 | 0 | 16·15 | 2 | 533·0 | 3 | 646 |

BIFILAR. $k=0{\cdot}000140$. BALANCE. $k=0{\cdot}0000085$.

June 19d 0h. Clock 20s fast; set right.
June 28d 15h. There seems to have been a slight motion in the magnets during the last three hours.

| Gött. Mean Time. | Declination. | | Bifilar Corrected. | | Balance Corrected. | |
|---|---|---|---|---|---|---|
| d. h. | Min. | ° ′ | Min. | Sc. Div. | Min. | Mic. Div. |
| 2 13 | 0 | 25 14·78 | 2 | 536·1 | 3 | 660·8 |
| | 15 | 15·47 | 17 | 536·7 | | |
| | 40 | 15·41 | | | | |
| 2 14 | 0 | 14·64 | 2 | 534·2 | 3 | 660·3 |
| 3 20 | 0 | 25 14·48 | 2 | 527·9 | 3 | 663·4 |
| | 15 | 10·97 | 17 | 527·6 | 18 | 660·6 |
| | 20 | 12·51 | 22 | 529·0 | | |
| | 25 | 13·43 | 27 | 527·5 | | |
| | 35 | 13·12 | 37 | 527·1 | 38 | 662·0 |
| | 40 | 13·36 | | | | |
| 3 21 | 0 | 12·40 | 2 | 524·9 | 3 | 660·0 |
| 4 13 | 0 | 25 15·02 | 2 | 533·3 | 3 | 662·2 |
| | 30 | 15·51 | 32 | 534·5 | 33 | 660·9 |
| 4 14 | 0 | 15·32 | 2 | 534·3 | 3 | 660·8 |
| | 15 | 16·21 | 17 | 533·6 | 18 | 660·6 |
| | 30 | 15·42 | 32 | 533·8 | 33 | 658·6 |
| 4 15 | 0 | 15·74 | 2 | 531·9 | 3 | 662·3 |
| | 15 | 16·10 | 17 | 532·0 | 18 | 660·8 |
| 4 16 | 0 | 14·20 | 2 | 531·3 | 3 | 663·1 |
| 5 12 | 0 | 25 17·13 | 2 | 536·1 | 3 | 658·6 |
| | 5 | 16·48 | 7 | 535·2 | | |
| | 15 | 14·89 | | | | |
| | 25 | 14·20 | | | | |
| | 40 | 13·47 | | | | |
| | 45 | 13·46 | | | | |
| 5 13 | 0 | 13·69 | 2 | 531·7 | 3 | 658·7 |
| | 30 | 13·94 | 32 | 529·7 | | |
| 5 14 | 0 | 13·86 | 2 | 530·5 | 3 | 658·3 |
| | 40 | 13·49 | | | | |
| 5 15 | 0 | 13·72 | 2 | 531·7 | 3 | 660·7 |
| 7 15 | 0 | 25 17·58 | 2 | 534·7 | 3 | 660·9 |
| | 10 | 18·16 | 12 | 534·6 | | |
| | 20 | 18·03 | | | | |
| | 35 | 18·67 | 37 | 528·1 | 38 | 652·4 |
| | 40 | 15·17 | 42 | 533·0 | 43 | 654·3 |
| | 45 | 15·59 | 47 | 539·0 | 48 | 653·5 |
| | 50 | 16·03 | 52 | 535·8 | | |
| 7 16 | 0 | 15·51 | 2 | 534·5 | 3 | 654·4 |
| 7 18 | 0 | 10·33 | 2 | 534·5 | 3 | 671·8 |
| | 10 | 07·27 | 12 | 530·7 | 13 | 676·0 |
| | 15 | 07·94 | 17 | 532·0 | 18 | 676·2 |
| | 25 | 11·68 | 27 | 532·2 | | |
| | 30 | 11·95 | 32 | 530·6 | 33 | 670·3 |
| | 35 | 13·32 | 37 | 528·9 | 38 | 669·5 |
| | 40 | 12·22 | 42 | 525·8 | | |
| | 45 | 12·58 | 47 | 525·0 | 48 | 669·0 |
| | 50 | 13·86 | 52 | 523·7 | | |
| 7 19 | 0 | 12·56 | 2 | 528·5 | 3 | 661·5 |
| | 20 | 14·87 | 22 | 535·3 | 23 | 653·1 |
| | 30 | 15·38 | 32 | 535·9 | | |
| 7 20 | 0 | 14·23 | 2 | 533·1 | 3 | 647·6 |
| 8 4 | 0 | 25 22·13 | 2 | 544·0 | 3 | 711·4 |
| | 20 | 22·87 | 22 | 556·0 | 23 | 723·8 |
| | | | 32 | 575·6 | | |
| | 35 | 22·27 | 37 | 568·0 | 38 | 733·4 |

| Gött. Mean Time. | Declination. | | Bifilar Corrected. | | Balance Corrected. | |
|---|---|---|---|---|---|---|
| d. h. | Min. | ° ′ | Min. | Sc. Div. | Min. | Mic. Div. |
| 8 4 | 45 | 25 23·88 | 47 | 550·7 | 48 | 756·1 |
| | 50 | 21·88 | 52 | 558·3 | 53 | 761·4 |
| | 55 | 21·34 | 57 | 561·3 | 58 | 764·0 |
| 8 5 | 0 | 21·91 | 2 | 562·7 | 3 | 761·1 |
| | 9 | 29·86 | | | | |
| | 10 | 30·35 | 12 | 530·7 | | |
| | 15 | 27·34 | 17 | 518·7 | 18 | 797·3 |
| | 20 | 24·66 | 22 | 520·2 | 23 | 805·1 |
| | 25 | 22·98 | 27 | 523·9 | | |
| | 30 | 20·90 | 32 | 534·1 | 33 | 797·4 |
| | 35 | 22·24 | 37 | 535·5 | | |
| | 45 | 20·85 | 47 | 542·2 | 48 | 784·0 |
| | 50 | 21·16 | 52 | 548·4 | 53 | 778·0 |
| | 55 | 21·50 | 57 | 550·5 | 58 | 772·9 |
| 8 6 | 0 | 21·36 | 2 | 551·9 | 3 | 764·6 |
| | 5 | 21·03 | 7 | 554·8 | 8 | 760·4 |
| | 10 | 21·44 | 12 | 557·7 | 13 | 754·6 |
| | 15 | 20·79 | 17 | 558·8 | 18 | 748·6 |
| | 20 | 21·44 | 22 | 558·6 | 23 | 744·2 |
| 8 7 | 0 | 20·63 | 2 | 563·8 | 3 | 708·7 |
| 8 8 | 0 | 17·44 | 2 | 552·9 | 3 | 700·9 |
| | 25 | 18·30 | 27 | 539·8 | 28 | 699·0 |
| 8 9 | 0 | 18·03 | 2 | 541·1 | 3 | 695·9 |
| 8 12 | 0 | 16·53 | 2 | 541·7 | 3 | 657·4 |
| | 15 | 15·81 | 17 | 542·5 | | |
| 8 13 | 0 | 13·20 | 2 | 538·1 | 3 | 658·6 |
| | 5 | 13·96 | 7 | 538·6 | 8 | 659·7 |
| | 15 | 15·15 | 17 | 537·2 | | |
| | 30 | 14·64 | 32 | 534·5 | 33 | 661·4 |
| 8 14 | 0 | 15·24 | 2 | 536·0 | 3 | 661·0 |
| | 10 | 16·82 | 12 | 533·3 | 13 | 662·2 |
| | 15 | 15·67 | 17 | 534·9 | 18 | 661·0 |
| | 27 | 17·56 | | | | |
| | 30 | 17·09 | 32 | 536·6 | | |
| | 35 | 17·61 | | | | |
| | 40 | 16·73 | | | | |
| | 50 | 14·75 | | | | |
| 8 15 | 0 | 14·51 | 2 | 535·2 | 3 | 653·8 |
| | 30 | 12·98 | | | | |
| 8 16 | 0 | 15·64 | 2 | 528·7 | 3 | 661·5 |
| | 10 | 16·95 | 12 | 529·0 | | |
| | 15 | 16·46 | | | | |
| | 25 | 16·60 | | | | |
| | 40 | 16·77 | 42 | 525·5 | 43 | 650·4 |
| | 55 | 16·41 | | | | |
| 8 17 | 0 | 16·05 | 2 | 525·9 | 3 | 645·2 |
| | 40 | 14·87 | | | | |
| | 50 | 16·95 | 52 | 525·1 | 53 | 642·6 |
| | 55 | 17·06 | | | | |
| 8 18 | 0 | 17·12 | 2 | 522·2 | 3 | 640·4 |
| | 7 | 18·41 | | | | |
| | 10 | 18·74 | 12 | 519·9 | 13 | 637·0 |
| | 20 | 19·24 | 22 | 519·6 | 23 | 633·9 |
| | 30 | 18·37 | 32 | 521·4 | | |
| | 45 | 19·28 | 47 | 520·0 | 48 | 638·4 |
| | 50 | 19·61 | | | | |
| | 55 | 19·73 | | | | |
| 8 19 | 0 | 19·59 | 2 | 523·0 | 3 | 635·5 |
| | 10 | 20·22 | 12 | 523·5 | | |
| | 20 | 20·45 | | | | |
| 8 20 | 0 | 17·33 | 2 | 521·7 | 3 | 652·1 |

| Gött. Mean Time. | Declination. | |
|---|---|---|
| d. h. | Min. | ° ′ |
| 9 14 | 0 | 25 10·03 |
| | 5 | 09·54 |
| | 10 | 10·98 |
| | 20 | 12·04 |
| | 40 | 11·46 |
| 9 15 | 0 | 12·11 |
| | 45 | 16·08 |
| 9 16 | 0 | 18·14 |
| | 10 | 18·37 |
| 9 17 | 0 | 15·38 |
| 10 7 | 0 | 25 16·80 |
| | 20 | 12·80 |
| | 35 | 14·31 |
| 10 8 | 0 | 16·70 |
| 11 13 | 0 | 25 13·32 |
| | 30 | 14·67 |
| 11 14 | 0 | 14·96 |
| 11 15 | 0 | 16·21 |
| | 15 | 14·94 |
| | 35 | 19·79 |
| | 40 | 19·53 |
| | 50 | 19·24 |
| 11 16 | 0 | 18·48 |
| | 10 | 16·86 |
| | 20 | 16·01 |
| | 50 | 15·01 |
| 11 17 | 0 | 13·84 |
| | 30 | 15·86 |
| 11 18 | 0 | 14·24 |
| 12 20 | 0 | 25 10·16 |
| | 10 | 10·70 |
| | 25 | 10·77 |
| | 30 | 10·77 |
| 12 21 | 0 | 13·46 |
| 13 1 | 0 | 25 21·48 |
| | 25 | 21·53 |
| 13 2 | 0 | 21·86 |
| 13 3 | 0 | 21·59 |
| | 15 | 23·32 |
| | 20 | 22·98 |
| | 35 | 21·46 |
| | 40 | 22·20 |
| | 45 | 21·37 |
| | 50 | 22·15 |
| | 55 | 22·99 |
| 13 4 | 0 | 22·35 |
| | 5 | 22·13 |
| | 10 | 21·93 |
| | 15 | 21·86 |
| | 20 | 20·79 |
| | 30 | 20·79 |
| | 35 | 21·46 |
| | 40 | 20·82 |

BIFILAR. $k=0{\cdot}000140$. BALANCE. $k=0{\cdot}0000085$.

July 2d 15h. There was no change in the declination between 14h and 15h.
July 9d 6h. Clock 15s fast; set right.
July 12d 20h 30m. There is a slight irregular up and down motion in the bifilar and balance.

| Bifilar Corrected. | | Balance Corrected. | | Gött. Mean Time. | Declination. | | Bifilar Corrected. | | Balance Corrected. | | Gött. Mean Time. | Declination. | | Bifilar Corrected. | | Balance Corrected. | |
|---|---|---|---|---|---|---|---|---|---|---|---|---|---|---|---|---|---|
| Min. | Sc. Div. | Min. | Mic. Div. | d. h. | Min. | ° ′ | Min. | Sc. Div. | Min. | Mic. Div. | d. h. | Min. | ° ′ | Min. | Sc. Div. | Min. | Mic. Div. |
| 2 | 524·8 | 3 | 650·8 | 13 4 | | | 47 | 537·3 | | | 17 11 | 35 | 25 08·56 | 37 | 531·4 | 38 | 640·0 |
| 7 | 527·1 | 8 | 649·7 | 13 5 | 0 | 25 19·71 | 2 | 535·7 | 3 | 676·5 | | 40 | 09·32 | 42 | 531·9 | 43 | 637·7 |
| 12 | 527·5 | | | 13 6 | 0 | 17·87 | 2 | 538·1 | 3 | 685·4 | | 45 | 09·49 | 47 | 528·7 | 48 | 636·4 |
| 22 | 529·6 | | | | | | 7 | 562·3 | 8 | 680·5 | | 50 | 09·42 | 52 | 528·2 | 53 | 634·0 |
| 42 | 528·3 | 43 | 646·5 | | 10 | 20·87 | 12 | 551·2 | 13 | 672·9 | 17 12 | 0 | 09·54 | 2 | 531·0 | 3 | 634·4 |
| 2 | 524·9 | 3 | 647·6 | | 15 | 19·55 | 17 | 555·9 | 18 | 670·7 | 17 13 | 0 | 08·16 | 2 | 524·3 | 3 | 635·6 |
| 47 | 525·3 | 48 | 647·6 | | 20 | 19·86 | 22 | 547·9 | 23 | 667·2 | | 10 | 11·03 | 12 | 523·1 | 13 | 639·2 |
| 2 | 525·9 | 3 | 647·7 | | 25 | 19·48 | 27 | 535·9 | 28 | 675·6 | | 15 | 12·85 | 17 | 523·3 | | |
| 12 | 526·1 | | | | | | 37 | 534·5 | 38 | 683·4 | | 20 | 13·59 | 22 | 523·7 | | |
| 2 | 527·8 | 3 | 646·4 | | 45 | 18·41 | 47 | 538·5 | | | | 25 | 13·99 | 27 | 525·3 | 28 | 637·1 |
| | | | | 13 7 | 0 | 17·63 | 2 | 539·8 | 3 | 678·1 | | 30 | 14·71 | 32 | 528·0 | 33 | 636·4 |
| 2 | 538·3 | 3 | 684·3 | 13 8 | 0 | 13·88 | 2 | 543·3 | 3 | 679·1 | | 35 | 18·90 | 37 | 532·1 | 38 | 631·5 |
| 22 | 542·8 | 23 | 681·7 | | 5 | 11·57 | 7 | 545·7 | 8 | 681·2 | | 40 | 22·45 | 42 | 530·7 | 43 | 621·1 |
| 37 | 544·0 | 38 | 683·0 | | 10 | 10·90 | 12 | 547·5 | | | | 45 | 24·86 | 47 | 529·3 | 48 | 614·4 |
| 2 | 540·4 | 3 | 677·1 | | 15 | 09·96 | 17 | 547·8 | 18 | 685·6 | | 50 | 24·80 | 52 | 530·4 | 53 | 606·2 |
| | | | | | 20 | 10·61 | 22 | 548·4 | | | | 55 | 22·96 | 57 | 534·5 | 58 | 596·2 |
| 2 | 531·8 | 3 | 655·6 | | 25 | 11·32 | 27 | 547·1 | | | 17 14 | 0 | 20·58 | 2 | 535·5 | 3 | 592·8 |
| 32 | 534·1 | | | | 40 | 12·22 | 42 | 551·5 | 43 | 681·3 | | 5 | 17·49 | 7 | 536·7 | 8 | 599·3 |
| 2 | 534·6 | 3 | 655·8 | 13 9 | 0 | 13·72 | 2 | 540·3 | 3 | 682·6 | | 10 | 15·39 | 12 | 538·1 | 13 | 595·6 |
| 2 | 531·0 | 3 | 654·2 | | | | | | | | | 15 | 13·90 | 17 | 540·3 | 18 | 598·3 |
| | | | | 15 13 | 0 | 25 15·56 | 2 | 532·6 | 3 | 654·8 | | 20 | 13·67 | 22 | 538·4 | 23 | 601·0 |
| 37 | 537·8 | 38 | 648·0 | | 10 | 18·16 | 12 | 532·7 | 13 | 653·6 | | 25 | 12·83 | 27 | 537·1 | 28 | 605·0 |
| 42 | 537·6 | | | | 15 | 18·57 | 17 | 529·6 | 18 | 650·5 | | 30 | 13·52 | 32 | 536·3 | 33 | 609·1 |
| | | | | | 20 | 17·81 | 22 | 535·8 | 23 | 644·7 | | 35 | 13·25 | 37 | 533·7 | 38 | 610·5 |
| 2 | 540·3 | 3 | 641·3 | | 25 | 16·70 | 27 | 539·3 | 28 | 644·3 | | 40 | 12·35 | 42 | 533·8 | 43 | 612·2 |
| 12 | 540·7 | | | | 30 | 15·52 | 32 | 541·6 | 33 | 647·9 | | 45 | 12·29 | 47 | 535·3 | 48 | 613·8 |
| | | | | | 35 | 14·26 | 37 | 545·3 | 38 | 632·6 | | 50 | 13·25 | 52 | 535·7 | 53 | 615·5 |
| | | | | | 40 | 14·03 | 42 | 543·2 | 43 | 631·2 | 17 15 | 0 | 14·94 | 2 | 534·2 | 3 | 618·6 |
| 2 | 534·7 | 3 | 644·4 | | 45 | 13·61 | 47 | 542·1 | | | | | | | | | |
| | | | | 15 14 | 0 | 12·82 | 2 | 536·2 | 3 | 631·2 | 18 1 | 0 | 25 23·52 | 2 | 523·3 | 3 | 640·4 |
| 2 | 535·5 | 3 | 646·3 | | | | | | | | | 20 | 25·74 | 22 | 523·5 | 23 | 642·4 |
| | | | | 16 12 | 0 | 25 16·86 | 2 | 541·9 | 3 | 654·9 | | 25 | 24·55 | 27 | 522·5 | | |
| 2 | 536·7 | 3 | 644·6 | | 10 | 15·14 | 12 | 538·2 | | | | | | 33 | 523·5 | | |
| 6 | 539·1 | | | | 15 | 13·50 | 17 | 535·2 | 18 | 640·8 | | 35 | 25·71 | 37 | 523·7 | 38 | 640·4 |
| 12 | 534·7 | 13 | 647·7 | | 25 | 14·35 | 27 | 538·2 | 28 | 648·6 | 18 2 | 0 | 26·81 | 2 | 531·1 | 3 | 634·3 |
| 17 | 532·7 | 18 | 650·4 | | 35 | 14·26 | 37 | 533·9 | 38 | 652·8 | 18 10 | 0 | 09·76 | 2 | 530·7 | 3 | 664·1 |
| 27 | 534·8 | 28 | 633·1 | | 50 | 18·16 | 52 | 548·6 | 53 | 626·6 | | 10 | 10·43 | 12 | 531·4 | | |
| 32 | 534·5 | 33 | 641·0 | | 55 | 17·96 | 57 | 549·9 | 58 | 619·7 | | 20 | 11·30 | 22 | 531·5 | | |
| 2 | 528·1 | 3 | 660·1 | 16 13 | 0 | 16·82 | 2 | 549·8 | 3 | 618·0 | 18 11 | 0 | 12·75 | 2 | 533·4 | 3 | 651·5 |
| | | | | | 10 | 13·93 | 12 | 546·9 | 13 | 610·7 | | | | | | | |
| 2 | 543·4 | 3 | 632·5 | | 15 | 12·72 | 17 | 545·3 | 18 | 609·7 | 21 14 | 0 | 25 13·63 | 2 | 537·7 | 3 | 652·5 |
| 7 | 546·6 | | | | 20 | 11·88 | 22 | 543·4 | 23 | 609·1 | | 15 | 14·17 | 17 | 539·8 | 18 | 645·8 |
| 27 | 531·1 | 28 | 643·1 | | 25 | 11·41 | 27 | 540·7 | 28 | 609·2 | 21 15 | 0 | 13·12 | 2 | 537·8 | 3 | 643·7 |
| 2 | 537·1 | 3 | 640·4 | | 30 | 11·57 | 32 | 537·5 | | | | | | | | | |
| 2 | 543·2 | 3 | 660·7 | | 40 | 11·64 | 42 | 531·0 | 43 | 610·4 | 25 11 | 0 | 25 13·64 | 2 | 535·8 | 3 | 628·3 |
| 17 | 555·5 | 18 | 661·8 | | 50 | 11·41 | 52 | 528·3 | | | | 10 | 11·79 | 12 | 531·6 | 13 | 627·2 |
| 22 | 552·0 | | | 16 14 | 0 | 10·09 | 2 | 528·0 | 3 | 608·9 | | 15 | 11·88 | 17 | 528·5 | 18 | 629·2 |
| 27 | 549·7 | 28 | 668·0 | | 10 | 09·13 | 12 | 526·6 | 13 | 606·6 | | 20 | 13·14 | 22 | 528·1 | | |
| 37 | 543·7 | 38 | 671·2 | | 20 | 07·40 | 22 | 522·4 | 23 | 607·9 | | 35 | 15·62 | 37 | 532·5 | 38 | 624·7 |
| 42 | 543·0 | 43 | 674·5 | | 25 | 06·91 | 27 | 522·3 | | | 25 12 | 0 | 15·91 | 2 | 529·5 | 3 | 620·5 |
| 47 | 534·9 | 48 | 683·2 | | 30 | 06·70 | 32 | 521·3 | 33 | 611·8 | 25 13 | 0 | 19·66 | 2 | 532·1 | 3 | 600·8 |
| 52 | 529·1 | 53 | 691·7 | | 40 | 06·70 | 42 | 521·8 | 43 | 616·6 | | 5 | 18·85 | 7 | 533·1 | 8 | 599·1 |
| 57 | 521·8 | 58 | 692·9 | | 50 | 09·89 | 52 | 524·2 | 53 | 622·2 | | 10 | 19·35 | 12 | 528·3 | 13 | 601·6 |
| 2 | 520·9 | 3 | 691·4 | 16 15 | 0 | 11·54 | 2 | 525·5 | 3 | 624·6 | | 15 | 17·74 | 17 | 527·8 | | |
| 7 | 522·3 | 8 | 682·8 | | | | | | | | | 30 | 14·98 | 32 | 528·7 | 33 | 607·6 |
| 12 | 525·5 | 13 | 682·2 | 17 11 | 0 | 25 09·71 | 2 | 539·5 | 3 | 644·4 | 25 14 | 0 | 12·72 | 2 | 528·8 | 3 | 622·1 |
| 17 | 528·5 | 18 | 686·6 | | 10 | 09·19 | 12 | 535·1 | | | | 30 | 12·85 | 32 | 529·1 | 33 | 629·2 |
| 22 | 527·8 | 23 | 680·9 | | 15 | 08·70 | 17 | 533·1 | 18 | 643·2 | 25 15 | 0 | 12·65 | 2 | 531·8 | 3 | 629·8 |
| 32 | 535·5 | 33 | 679·6 | | 20 | 08·55 | 22 | 530·6 | | | | | | | | | |
| 37 | 541·6 | | | | 25 | 08·41 | 27 | 528·6 | 28 | 642·9 | 26 12 | 0 | 25 12·11 | 2 | 535·8 | 3 | 631·0 |
| 42 | 538·1 | 43 | 675·9 | | 30 | 08·26 | 32 | 528·2 | | | | 10 | 13·16 | 12 | 533·9 | 13 | 631·9 |

BIFILAR. $k=0{\cdot}000140$. BALANCE. $k=0{\cdot}0000085$.

July 17$^d$ 12$^h$—13$^h$. The declination remained between 25° 09′·8 and 25° 08′·4, the least declination being about 13$^h$ 0$^m$.

| Gött. Mean Time. | | Declination. | | Bifilar Corrected. | | Balance Corrected. | |
|---|---|---|---|---|---|---|---|
| d. | h. | Min. | ° ′ | Min. | Sc. Div. | Min. | Mic. Div. |
| 26 | 12 | 20 | 25 14·51 | 22 | 532·4 | | |
| 26 | 13 | 0 | 14·35 | 2 | 531·4 | 3 | 625·5 |
| 27 | 0 | 0 | 25 22·03 | 2 | 514·7 | 3 | 616·3 |
| | | 40 | 26·45 | 42 | 529·6 | 43 | 617·0 |
| | | 45 | 27·66 | 47 | 526·9 | 48 | 618·6 |
| | | 50 | 27·26 | 52 | 530·8 | | |
| | | 55 | 27·24 | 57 | 527·5 | | |
| 27 | 1 | 0 | 26·47 | 2 | 531·5 | 3 | 621·6 |
| | | 25 | 23·90 | 27 | 535·0 | 28 | 625·8 |
| 27 | 2 | 0 | 21·26 | 2 | 537·1 | 3 | 631·6 |
| 27 | 5 | 0 | 12·73 | 2 | 544·8 | 3 | 715·0 |
| | | 10 | 06·81 | 12 | 558·2 | 13 | 712·8 |
| | | 15 | 08·55 | 17 | 561·2 | 18 | 713·9 |
| | | 20 | 11·51 | 22 | 559·3 | | |
| | | 25 | 13·57 | 27 | 553·7 | 28 | 715·8 |
| | | 30 | 16·03 | 32 | 547·1 | | |
| | | 35 | 17·17 | 37 | 540·0 | 38 | 717·6 |
| | | 40 | 17·49 | 42 | 539·7 | | |
| 27 | 6 | 0 | 18·25 | 2 | 542·9 | 3 | 700·6 |
| | | 15 | 18·60 | 17 | 544·0 | 18 | 691·7 |
| 27 | 7 | 0 | 18·25 | 2 | 555·1 | 3 | 683·3 |
| 27 | 8 | 0 | 09·46 | 2 | 551·0 | 3 | 710·8 |
| | | 10 | 11·98 | 12 | 546·2 | | |
| 27 | 9 | 0 | 16·95 | 2 | 536·9 | 3 | 678·4 |
| 27 | 11 | 0 | 14·38 | 2 | 538·9 | 3 | 634·8 |
| | | 10 | 12·89 | 12 | 530·9 | 13 | 634·6 |
| | | 15 | 12·06 | 17 | 524·5 | 18 | 634·2 |
| | | 20 | 10·92 | 22 | 521·1 | | |
| | | 30 | 07·34 | 32 | 513·1 | 33 | 629·2 |
| | | 35 | 06·50 | 37 | 517·5 | 38 | 625·8 |
| | | 40 | 07·44 | 42 | 520·0 | 43 | 622·7 |
| | | 50 | 08·43 | 52 | 525·4 | | |
| 27 | 12 | 0 | 12·33 | 2 | 527·3 | 3 | 616·4 |
| 28 | 13 | 0 | 25 17·68 | 2 | 536·6 | 3 | 627·6 |
| | | 20 | 17·15 | | | | |
| 28 | 14 | 0 | 20·90 | 2 | 535·5 | 3 | 603·9 |
| | | 10 | 22·20 | 12 | 534·3 | 13 | 595·5 |
| | | 15 | 22·06 | 17 | 534·1 | 18 | 592·8 |
| | | 30 | 19·51 | 32 | 535·8 | 33 | 581·4 |
| | | 40 | 17·73 | 42 | 532·7 | 43 | 578·0 |
| | | 50 | 17·42 | 52 | 533·2 | 53 | 578·3 |
| 28 | 15 | 0 | 17·51 | 2 | 533·5 | 3 | 575·9 |
| | | 30 | 14·46 | | | | |
| 28 | 16 | 0 | 12·18 | 2 | 524·2 | 3 | 600·9 |
| | | 20 | 14·96 | 22 | 526·2 | 23 | 614·4 |
| | | 40 | 15·04 | 42 | 527·8 | 43 | 617·8 |
| 28 | 17 | 0 | 14·87 | 2 | 525·8 | 3 | 621·2 |
| 31 | 2 | 0 | 25 27·42 | 2 | 559·9 | 3 | 597·1 |
| | | 10 | 25·43 | 12 | 539·4 | 13 | 608·9 |
| | | 15 | 25·40 | 17 | 533·4 | 18 | 612·0 |
| | | 20 | 25·56 | 22 | 527·1 | | |
| | | 25 | 25·98 | 27 | 531·0 | 28 | 614·5 |
| | | 30 | 26·37 | 32 | 533·5 | | |
| | | 35 | 26·47 | 37 | 544·0 | 38 | 611·8 |
| | | 40 | 25·56 | 42 | 546·3 | | |
| | | 45 | 25·53 | 47 | 551·8 | 48 | 611·4 |
| | | 50 | 25·56 | 52 | 557·3 | | |
| | | 55 | 24·42 | 57 | 553·2 | | |
| 31 | 3 | 0 | 25 24·05 | 2 | 545·3 | 3 | 620·1 |
| | | | | 29 | 560·4 | | |
| | | 30 | 25·53 | 32 | 556·9 | 33 | 622·7 |
| | | 40 | 24·89 | 42 | 543·4 | 43 | 628·6 |
| 31 | 4 | 0 | 25·16 | 2 | 567·7 | 3 | 619·7 |
| | | | | 15 | 519·1 | | |
| | | 15 | 22·03 | 17 | 524·8 | 18 | 643·6 |
| | | 20 | 21·48 | 22 | 529·1 | 23 | 643·0 |
| | | 25 | 22·78 | 27 | 548·3 | 28 | 634·5 |
| | | 30 | 22·89 | 32 | 549·2 | | |
| | | 35 | 23·14 | 37 | 554·6 | 38 | 633·1 |
| | | 40 | 23·04 | 42 | 557·3 | 43 | 629·9 |
| | | 45 | 22·80 | 47 | 566·1 | 48 | 626·6 |
| | | 50 | 22·85 | 52 | 563·4 | | |
| | | 55 | 22·18 | 57 | 557·3 | 58 | 629·9 |
| 31 | 5 | 0 | 22·22 | 2 | 547·5 | 3 | 636·0 |
| | | 5 | 21·53 | 7 | 548·8 | 8 | 634·7 |
| | | 10 | 21·59 | 12 | 550·4 | | |
| | | 15 | 21·77 | 17 | 551·9 | 18 | 630·6 |
| | | 20 | 21·34 | 22 | 550·2 | | |
| | | | | 27 | 543·2 | | |
| | | 30 | 21·16 | 32 | 545·8 | 33 | 631·6 |
| | | 35 | 21·19 | 37 | 557·8 | 38 | 626·5 |
| | | 40 | 21·41 | 42 | 559·8 | | |
| | | 45 | 24·72 | 47 | 559·8 | 48 | 625·6 |
| | | 50 | 20·83 | 52 | 551·1 | 53 | 628·6 |
| | | 55 | 20·18 | 57 | 546·1 | 58 | 630·8 |
| 31 | 6 | 0 | 20·30 | 2 | 544·3 | 3 | 632·6 |
| | | 15 | 20·79 | 17 | 542·6 | 18 | 629·8 |
| | | 20 | 20·65 | 22 | 544·3 | 23 | 627·4 |
| | | 30 | 20·72 | 32 | 547·1 | 33 | 623·8 |
| | | 40 | 20·16 | 42 | 559·0 | 43 | 620·7 |
| | | 45 | 20·18 | 47 | 564·1 | 48 | 617·9 |
| | | 50 | 21·19 | 52 | 563·9 | 53 | 619·9 |
| | | 55 | 20·72 | 57 | 553·1 | 58 | 623·7 |
| 31 | 7 | 0 | 20·77 | 2 | 553·8 | 3 | 623·1 |
| | | 15 | 20·32 | 17 | 554·0 | 18 | 625·3 |
| | | 30 | 17·15 | 32 | 556·9 | 33 | 628·9 |
| | | 45 | 17·24 | 47 | 560·0 | 48 | 638·8 |
| | | 50 | 16·66 | 52 | 550·7 | 53 | 641·7 |
| | | 55 | 15·31 | 57 | 550·6 | 58 | 639·8 |
| 31 | 8 | 0 | 13·49 | 2 | 551·9 | 3 | 641·1 |
| | | 10 | 08·55 | 12 | 561·6 | 13 | 636·6 |
| | | 15 | 05·97 | 17 | 566·2 | 18 | 632·5 |
| | | 20 | 07·81 | 22 | 574·3 | 23 | 628·0 |
| | | 25 | 09·79 | 27 | 569·0 | 28 | 627·7 |
| | | 30 | 11·19 | 32 | 570·9 | 33 | 625·1 |
| | | 35 | 12·92 | 37 | 561·3 | 38 | 625·9 |
| | | 40 | 15·36 | 42 | 555·1 | 43 | 626·5 |
| | | 45 | 15·99 | 47 | 542·6 | 48 | 633·3 |
| | | 50 | 16·03 | 52 | 547·0 | 53 | 629·3 |
| | | 55 | 14·94 | 57 | 548·3 | 58 | 627·6 |
| 31 | 9 | 0 | 15·56 | 2 | 551·7 | 3 | 626·0 |
| | | 5 | 16·79 | 7 | 554·5 | 8 | 624·1 |
| | | 10 | 17·83 | 12 | 552·1 | 13 | 623·3 |
| | | 15 | 17·26 | 17 | 548·1 | | |
| | | 30 | 16·32 | 32 | 543·8 | 33 | 627·4 |
| | | 45 | 16·79 | 47 | 536·3 | 48 | 629·6 |
| 31 | 10 | 0 | 16·03 | 2 | 537·2 | 3 | 629·2 |
| 31 | 12 | 0 | 14·38 | 2 | 535·7 | 3 | 633·3 |
| | | 30 | 11·30 | 32 | 533·6 | 33 | 637·0 |
| 31 | 12 | 40 | 25 10·00 | | | | |
| | | 50 | 11·07 | | | | |
| 31 | 13 | 0 | 11·64 | | | | |
| | | 25 | 10·48 | | | | |
| | | 40 | 10·77 | | | | |
| | | 45 | 11·24 | | | | |
| 31 | 14 | 0 | 10·70 | | | | |
| | | 30 | 12·65 | | | | |
| 31 | 15 | 0 | 13·46 | | | | |
| 1 | 3 | 0 | 25 25·09 | | | | |
| | | 20 | 25·60 | | | | |
| | | 25 | 26·14 | | | | |
| | | 30 | 26·23 | | | | |
| | | 35 | 27·24 | | | | |
| | | 40 | 26·58 | | | | |
| | | 45 | 26·52 | | | | |
| | | 50 | 27·08 | | | | |
| | | 55 | 26·10 | | | | |
| 1 | 4 | 0 | 25·36 | | | | |
| | | 5 | 24·86 | | | | |
| | | 10 | 27·35 | | | | |
| | | 15 | 27·91 | | | | |
| | | 20 | 26·90 | | | | |
| | | 25 | 26·07 | | | | |
| | | 30 | 26·27 | | | | |
| | | 35 | 24·57 | | | | |
| | | 40 | 24·75 | | | | |
| | | 45 | 22·91 | | | | |
| | | 50 | 23·19 | | | | |
| | | 55 | 24·23 | | | | |
| 1 | 5 | 0 | 26·34 | | | | |
| | | 5 | 23·16 | | | | |

BIFILAR. $k$=0·000140. BALANCE. $k$=0·0000085.

Aug. 1ᵈ 4ʰ 24ᵐ +. The bifilar reading gradually diminished from 24ᵐ till 26ᵐ 35ˢ, increased till 33ᵐ, decreased till 35ᵐ 0ˢ; at 39ᵐ 50ˢ it had slowly increased, and then immediately diminished till 42ᵐ 50ˢ.

| Bifilar Corrected. | | Balance Corrected. | | Gött. Mean Time. | | Declination. | | Bifilar Corrected. | | Balance Corrected. | | Gött. Mean Time. | | Declination. | | Bifilar Corrected. | | Balance Corrected. | |
|---|---|---|---|---|---|---|---|---|---|---|---|---|---|---|---|---|---|---|---|
| Min. | Sc. Div. | Min. | Mic. Div. | d. | h. | Min. | ° ′ | Min. | Sc. Div. | Min. | Mic. Div | d. | h. | Min. | ° ′ | Min. | Sc. Div. | Min. | Mic. Div. |
| 42 | 533·6 | 43 | 637·9 | 1 | 5 | | | 8 | 615·1 | 8 | 601·2 | 1 | 7 | 40 | 25 14·57 | 42 | 577·5 | 43 | 740·7 |
| 52 | 530·3 | 53 | 642·3 | | | | | 9 | 607·6 | | | | | 45 | 14·60 | 47 | 580·4 | 48 | 735·9 |
| 2 | 532·6 | 3 | 639·7 | | | 10 | 25 21·91 | 10 | 588·3 | | | | | | | 52 | 582·0 | 53 | 739·4 |
| 27 | 532·8 | 28 | 639·7 | | | | | 11 | 581·5 | | | | | 55 | 21·95 | 57 | 573·5 | 58 | 741·0 |
| | | | | | | | | 12 | 582·8 | 12 | 621·1 | 1 | 8 | 0 | 21·50 | 2 | 565·8 | 3 | 738·6 |
| 47 | 532·4 | 48 | 640·1 | | | 13 | 22·51 | 13 | 584·9 | | | | | 5 | 18·95 | 7 | 559·7 | 8 | 731·4 |
| 2 | 530·0 | 3 | 639·8 | | | | | 14 | 578·4 | | | | | 10 | 16·13 | 12 | 558·1 | 13 | 745·1 |
| 32 | 531·8 | 33 | 638·9 | | | 15 | 22·01 | 15 | 576·6 | | | | | 15 | 14·84 | 17 | 550·7 | 18 | 766·6 |
| 2 | 534·9 | 3 | 633·9 | | | | | 16 | 574·6 | | | | | 20 | 09·10 | 22 | 549·8 | 23 | 764·0 |
| | | | | | | | | 17 | 573·4 | | | | | 25 | 06·86 | 27 | 553·9 | 28 | 754·4 |
| 2 | 541·1 | 3 | 599·2 | | | | | 18 | 567·9 | 18 | 636·6 | | | 30 | 08·05 | 32 | 552·3 | 33 | 748·6 |
| 17 | 552·0 | 18 | 596·4 | | | | | 19 | 561·3 | | | | | 35 | 08·26 | 37 | 551·9 | 38 | 740·1 |
| 22 | 553·9 | 23 | 591·7 | | | 20 | 23·32 | 20 | 566·1 | | | | | 45 | 08·05 | 47 | 547·1 | 48 | 730·5 |
| 27 | 562·6 | | | | | | | 21 | 568·1 | | | | | 55 | 10·36 | 57 | 541·8 | 58 | 725·8 |
| 32 | 569·4 | 33 | 583·2 | | | | | 22 | 565·1 | | | 1 | 9 | 0 | 11·62 | 2 | 534·3 | 3 | 734·9 |
| 36 | 576·6 | | | | | | | 23 | 565·1 | 23 | 645·1 | | | 5 | 11·77 | 7 | 533·1 | 8 | 740·2 |
| 37 | 575·9 | 38 | 587·2 | | | | | 24 | 566·1 | | | | | 10 | 10·43 | 12 | 532·6 | 13 | 744·9 |
| 42 | 567·6 | 43 | 590·7 | | | 25 | 24·87 | 25 | 569·6 | | | | | 15 | 08·48 | 17 | 536·3 | 18 | 739·5 |
| 47 | 572·8 | | | | | | | 26 | 569·5 | | | | | 20 | 07·79 | 22 | 535·9 | 23 | 737·1 |
| 52 | 564·6 | 53 | 593·3 | | | | | 27 | 569·0 | | | | | 25 | 08·97 | 27 | 537·0 | 28 | 730·9 |
| 57 | 559·3 | | | | | | | 28 | 572·2 | 28 | 648·9 | | | 30 | 10·03 | 32 | 536·1 | 33 | 722·4 |
| 2 | 535·3 | 3 | 605·6 | | | | | 29 | 574·1 | | | | | 50 | 09·00 | 52 | 523·7 | 53 | 684·6 |
| 7 | 563·1 | 8 | 598·3 | | | 30 | 25·56 | 30 | 575·0 | | | 1 | 10 | 0 | 07·22 | 2 | 518·4 | 3 | 662·9 |
| 12 | 564·7 | | | | | | | 33 | 567·5 | 33 | 651·7 | | | 15 | 08·79 | 17 | 520·0 | 18 | 651·6 |
| 17 | 570·2 | 18 | 590·7 | | | 35 | 24·91 | 35 | 575·0 | | | | | 30 | 12·71 | 32 | 527·3 | 33 | 656·1 |
| 22 | 564·0 | 23 | 592·3 | | | | | 36 | 571·9 | | | 1 | 11 | 0 | 15·74 | 2 | 533·9 | 3 | 644·3 |
| 24 | 572·0 | | | | | | | 38 | 567·8 | 38 | 657·6 | | | 15 | 12·11 | 17 | 522·3 | 18 | 628·9 |
| 25 | 561·2 | | | | | 40 | 23·75 | 40 | 566·0 | | | | | 20 | 10·78 | 22 | 517·9 | 23 | 627·4 |
| 27 | 545·6 | 8 | 598·7 | | | | | 42 | 571·4 | 43 | 662·4 | | | 25 | 11·05 | 27 | 515·8 | 28 | 624·2 |
| 32 | 549·2 | 3 | 597·2 | | | | | 44 | 575·7 | | | | | 30 | 10·90 | 32 | 516·7 | 33 | 619·2 |
| 33 | 563·0 | | | | | 45 | 23·61 | 47 | 593·7 | 48 | 660·7 | | | 45 | 10·78 | 47 | 514·5 | 48 | 614·4 |
| 34 | 546·8 | | | | | | | 49 | 594·6 | | | 1 | 12 | 0 | 09·66 | 2 | 522·0 | 3 | 597·5 |
| 35 | 521·9 | | | | | 50 | 26·43 | 51 | 596·6 | | | | | 10 | 09·84 | 12 | 526·8 | | |
| 36 | 523·6 | | | | | | | 52 | 587·5 | 53 | 669·8 | | | 15 | 09·91 | 17 | 525·7 | 18 | 590·2 |
| 37 | 523·1 | 38 | 610·3 | | | | | 54 | 578·6 | | | | | 25 | 09·86 | 27 | 519·3 | 28 | 573·9 |
| 39 | 534·5 | | | | | 55 | 25·96 | 56 | 568·1 | | | | | 30 | 12·02 | 32 | 514·7 | 33 | 560·6 |
| 40 | 546·3 | | | | | | | 57 | 563·7 | 58 | 688·9 | | | 35 | 13·16 | 37 | 510·0 | 38 | 547·7 |
| 41 | 518·5 | | | | | | | 59 | 562·3 | | | | | 40 | 15·04 | 42 | 516·1 | 43 | 546·2 |
| 42 | 495·2 | 42 | 619·1 | 1 | 6 | 0 | 24·55 | 2 | 549·3 | 3 | 710·1 | | | 45 | 13·43 | 47 | 523·7 | 48 | 520·5 |
| 43 | 490·9 | 43 | 624·4 | | | | | 4 | 547·3 | | | | | 50 | 06·54 | 52 | 515·9 | 53 | 514·8 |
| 44 | 494·1 | | | | | 5 | 23·18 | 7 | 552·8 | 8 | 732·7 | | | 55 | 05·08 | 57 | 512·8 | 58 | 500·2 |
| 45 | 494·1 | | | | | 10 | 21·51 | 12 | 567·8 | 13 | 756·9 | 1 | 13 | 0 | 07·25 | 2 | 518·2 | 3 | 495·2 |
| 46 | 500·2 | | | | | | | 14 | 555·6 | | | | | 5 | 06·79 | 7 | 520·4 | 8 | 498·3 |
| 47 | 507·2 | | | | | 15 | 23·75 | | | 16 | 769·8 | | | 10 | 06·88 | 12 | 521·5 | 13 | 503·5 |
| 48 | 513·2 | 48 | 623·4 | | | | | 17 | 559·2 | 18 | 770·3 | | | 15 | 05·76 | 17 | 521·8 | 18 | 517·6 |
| 50 | 525·6 | | | | | | | 19 | 564·5 | | | | | 20 | 04·71 | 22 | 522·2 | 23 | 530·1 |
| 52 | 538·4 | | | | | 20 | 17·42 | 22 | 560·9 | 23 | 774·6 | | | 40 | 06·71 | 42 | 514·3 | 43 | 551·5 |
| 53 | 527·2 | 53 | 613·2 | | | | | 24 | 573·1 | | | 1 | 14 | 0 | 12·73 | 2 | 519·8 | 3 | 597·5 |
| 55 | 565·8 | | | | | 25 | 11·77 | 27 | 576·4 | 28 | 756·1 | | | 20 | 12·78 | 22 | 524·6 | 23 | 658·3 |
| 56 | 570·4 | | | | | 30 | 13·05 | 32 | 571·0 | 33 | 746·5 | 1 | 15 | 0 | 16·62 | 2 | 523·2 | 3 | 613·8 |
| 57 | 580·2 | | | | | 35 | 10·38 | 37 | 571·6 | 38 | 736·2 | 1 | 19 | 0 | 19·98 | 2 | 522·5 | 3 | 616·9 |
| 58 | 584·4 | 58 | 604·0 | | | 40 | 11·35 | 42 | 573·4 | 43 | 735·2 | | | 10 | 16·89 | 12 | 523·0 | 13 | 611·5 |
| 59 | 595·7 | | | | | 45 | 12·82 | 47 | 576·2 | 48 | 735·7 | | | 20 | 17·09 | 22 | 521·3 | 23 | 613·4 |
| 0 | 611·4 | | | | | 50 | 13·12 | 52 | 583·0 | 53 | 737·5 | 1 | 20 | 0 | 13·49 | 2 | 510·9 | 3 | 630·2 |
| 1 | 620·1 | | | | | 55 | 13·90 | 57 | 580·9 | 58 | 742·1 | | | | | | | | |
| 2 | 619·9 | | | 1 | 7 | 0 | 14·04 | 2 | 575·2 | 3 | 746·6 | 2 | 2 | 0 | 25 27·10 | 2 | 521·4 | 3 | 643·0 |
| 3 | 621·8 | 3 | 591·3 | | * | 10 | 16·68 | 12 | 567·5 | 13 | 747·5 | | | 10 | 25·41 | 12 | 516·6 | 13 | 645·3 |
| 4 | 618·8 | | | | | 15 | 16·41 | 17 | 565·0 | 18 | 753·1 | | | 20 | 25·56 | 22 | 519·1 | | |
| 5 | 614·8 | | | | | 25 | 11·86 | 27 | 576·7 | 28 | 746·9 | 2 | 3 | 0 | 26·74 | 2 | 518·9 | 3 | 667·6 |
| 6 | 613·9 | | | | | 30 | 12·78 | 32 | 576·1 | 33 | 741·6 | | | 25 | 19·78 | 27 | 535·1 | 28 | 688·3 |
| 7 | 612·6 | | | | | 35 | 12·85 | 37 | 576·4 | 38 | 742·1 | | | 30 | 21·48 | 32 | 530·6 | 33 | 691·6 |

BIFILAR. $k=0{\cdot}000140$. BALANCE. $k=0{\cdot}0000085$.

Aug. 1d 6h 40m. Clock 4s slow.

* See notes on the Aurora Borealis, *after* the *Extra Observations of Magnetometers.*

| Gött. Mean Time. | Declination. | | Bifilar Corrected. | | Balance Corrected. | | Gött. Mean Time. | Declination. | | Bifilar Corrected. | | Balance Corrected. | | Gött. Mean Time. | Declination. | |
|---|---|---|---|---|---|---|---|---|---|---|---|---|---|---|---|---|
| d. h. | Min. | ° ′ | Min. | Sc. Div. | Min. | Mic. Div. | d. h. | Min. | ° ′ | Min. | Sc. Div. | Min. | Mic. Div. | d. h. | Min. | ° ′ |
| 2 3 | 40 | 25 22·33 | 42 | 528·9 | 43 | 691·4 | 3 6 | 0 | 25 16·18 | 2 | 541·8 | 3 | 659·1 | 9 6 | 15 | 25 24·48 |
| | 45 | 22·25 | 47 | 529·6 | | | | 10 | 13·81 | 12 | 539·1 | 13 | 666·1 | | | |
| 2 4 | 0 | 22·01 | 2 | 537·1 | 3 | 681·2 | | 15 | 11·95 | 17 | 544·8 | 18 | 667·6 | | 20 | 24·26 |
| | | | | | | | | 20 | 11·41 | 22 | 548·8 | 23 | 670·6 | | 25 | 24·22 |
| 2 11 | 0 | 25 14·51 | 2 | 543·4 | 3 | 588·9 | 3 7 | 0 | 12·25 | 2 | 543·2 | 3 | 682·5 | | 30 | 22·44 |
| | 10 | 13·99 | 12 | 539·6 | 13 | 577·3 | | | | | | | | | 35 | 20·47 |
| | 15 | 16·87 | 17 | 534·4 | 18 | 576·7 | 4 15 | 0 | 25 15·27 | 2 | 524·5 | 3 | 604·4 | | 40 | 19·58 |
| | 20 | 18·87 | 22 | 530·7 | 23 | 577·0 | | 15 | 16·46 | 17 | 530·0 | 18 | 604·4 | | 45 | 18·72 |
| | 25 | 20·05 | 27 | 529·6 | 28 | 574·9 | | 35 | 14·80 | 37 | 528·4 | 38 | 608·2 | | 50 | 19·42 |
| | 30 | 22·20 | 32 | 527·0 | 33 | 570·4 | 4 16 | 0 | 14·10 | 2 | 529·0 | 3 | 614·2 | | 55 | 20·65 |
| | 35 | 24·43 | 37 | 524·6 | 38 | 561·8 | 4 18 | 0 | 18·48 | 2 | 525·5 | 3 | 618·6 | 9 7 | 0 | 21·93 |
| | 40 | 25·68 | 42 | 520·6 | 43 | 550·0 | | 10 | 19·32 | 12 | 527·0 | 13 | 615·4 | 9 8 | 0 | 18·55 |
| | 45 | 25·53 | 47 | 522·7 | 48 | 531·9 | | 20 | 20·16 | 22 | 530·4 | 23 | 613·4 | 9 9 | 0 | 11·98 |
| | 50 | 24·48 | 52 | 523·2 | 53 | 518·8 | | 30 | 20·33 | 32 | 532·2 | 33 | 609·9 | | 5 | 16·95 |
| | 55 | 22·69 | 57 | 523·1 | 58 | 510·2 | 4 19 | 0 | 20·72 | 2 | 527·8 | 3 | 609·4 | | 10 | 20·18 |
| 2 12 | 0 | 21·29 | 2 | 523·4 | 3 | 511·3 | | 10 | 21·90 | 12 | 528·5 | 13 | 608·6 | | 15 | 18·70 |
| | 5 | 19·71 | 7 | 523·3 | 8 | 501·0 | | 20 | 20·92 | 22 | 528·8 | | | | 20 | 17·24 |
| | 10 | 18·38 | 12 | 522·3 | 13 | 500·0 | | 40 | 17·96 | 42 | 527·7 | 43 | 617·9 | | 25 | 15·39 |
| | 15 | 16·25 | 17 | 520·7 | 18 | 500·1 | 4 20 | 0 | 14·28 | 2 | 526·5 | 3 | 612·6 | | 45 | 14·75 |
| | 20 | 14·13 | 22 | 521·4 | 23 | 501·5 | 4 21 | 0 | 12·85 | 2 | 514·4 | 3 | 628·5 | 9 10 | 0 | 14·96 |
| | 25 | 12·36 | 27 | 520·7 | 28 | 505·6 | | 20 | 13·97 | 22 | 516·2 | 23 | 630·2 | 9 11 | 0 | 18·65 |
| | 30 | 11·51 | 32 | 522·4 | 33 | 512·2 | 4 22 | 0 | 15·27 | 2 | 518·1 | 3 | 630·9 | * | 5 | 11·84 |
| | 35 | 11·08 | | | | | | | | | | | | | 10 | 13·43 |
| | 40 | 10·40 | 42 | 525·3 | 43 | 525·9 | 6 15 | 0 | 25 19·31 | 2 | 531·1 | 3 | 643·2 | | 15 | 16·65 |
| | | | 47 | 530·3 | 48 | 530·0 | | 20 | 18·03 | | | | | | 20 | 15·72 |
| | 50 | 15·41 | 52 | 530·6 | 53 | 529·6 | 6 16 | 0 | 17·49 | 2 | 529·7 | 3 | 646·5 | | 25 | 17·98 |
| | 55 | 15·59 | 57 | 528·0 | 58 | 526·8 | | | | | | | | | 30 | 18·27 |
| 2 13 | 0 | 14·50 | 2 | 525·5 | 3 | 527·0 | 9 2 | 0 | 25 27·48 | 2 | 521·3 | 3 | 659·7 | | 35 | 19·76 |
| | 15 | 12·01 | 17 | 528·9 | 18 | 534·9 | | 25 | 25·33 | 27 | 523·2 | 28 | 660·4 | | 40 | 21·44 |
| | 40 | 14·92 | 42 | 524·8 | 43 | 555·7 | | | | 47 | 543·6 | 48 | 659·5 | | 45 | 23·04 |
| 2 14 | 0 | 16·65 | 2 | 524·9 | 3 | 556·8 | | 50 | 26·82 | 52 | 565·3 | 53 | 651·5 | | 50 | 24·10 |
| * | 15 | 14·73 | 17 | 527·9 | 18 | 549·0 | | 55 | 25·33 | 57 | 564·5 | 58 | 655·4 | | 55 | 22·96 |
| | | | 30 | 529·9 | | | 9 3 | 0 | 26·82 | 2 | 540·9 | 3 | 667·1 | 9 12 | 0 | 20·29 |
| | 35 | 11·42 | 37 | 526·3 | 38 | 546·1 | | 5 | 26·00 | 7 | 536·6 | 8 | 670·1 | | 10 | 15·41 |
| | 40 | 11·79 | 42 | 519·6 | 43 | 547·7 | | 10 | 29·21 | 12 | 548·4 | | | | 15 | 12·98 |
| | 45 | 10·74 | 47 | 515·3 | 48 | 550·4 | | 15 | 27·15 | 17 | 537·0 | 18 | 673·5 | | 20 | 10·07 |
| | 50 | 09·49 | 52 | 512·6 | 53 | 551·5 | | 20 | 26·57 | 22 | 533·0 | 23 | 675·4 | | 25 | 08·50 |
| | 55 | 07·92 | 57 | 514·2 | 58 | 550·7 | | 30 | 27·51 | 32 | 541·7 | 33 | 683·1 | | 30 | 08·75 |
| 2 15 | 0 | 07·37 | 2 | 517·5 | 3 | 556·1 | | 35 | 28·38 | 37 | 542·6 | 38 | 686·9 | | 35 | 09·02 |
| | 5 | 08·50 | 7 | 519·5 | 8 | 563·0 | | 45 | 30·44 | 47 | 569·4 | | | 9 13 | 0 | 12·76 |
| | 10 | 09·56 | 12 | 518·8 | 13 | 569·5 | | 50 | 30·31 | 52 | 575·8 | 53 | 690·9 | * | 30 | 11·24 |
| | 20 | 10·67 | 22 | 521·5 | 23 | 578·6 | | 55 | 28·08 | 57 | 572·8 | 58 | 711·3 | 9 14 | 0 | 12·76 |
| | 40 | 13·05 | 42 | 521·7 | 43 | 578·9 | 9 4 | 0 | 28·25 | 2 | 572·4 | 3 | 711·2 | 9 19 | 0 | 13·44 |
| 2 16 | 0 | 12·25 | 2 | 524·9 | 3 | 586·5 | | 5 | 28·25 | 7 | 572·5 | 8 | 719·6 | | 25 | 17·44 |
| | 10 | 09·82 | 12 | 528·4 | 13 | 590·7 | | 10 | 26·48 | 12 | 563·4 | 13 | 735·3 | | 30 | 17·49 |
| 2 17 | 0 | 13·19 | 2 | 522·6 | 3 | 606·1 | | 15 | 28·85 | 17 | 555·4 | 18 | 745·4 | 9 20 | 0 | 15·67 |
| | 15 | 14·57 | 17 | 519·3 | 18 | 611·3 | | 20 | 30·76 | 22 | 545·9 | 23 | 757·1 | | | |
| 2 18 | 0 | 12·83 | 2 | 524·6 | 3 | 610·7 | | 25 | 30·67 | 27 | 529·0 | 28 | 771·1 | 10 12 | 0 | 25 19·58 |
| | | | | | | | | 30 | 27·89 | 32 | 517·4 | 33 | 778·6 | | 10 | 17·71 |
| 3 2 | 0 | 25 25·06 | 2 | 535·6 | 3 | 619·8 | | 35 | 25·56 | 37 | 523·6 | 38 | 779·0 | | 30 | 16·16 |
| | 15 | 24·53 | 17 | 516·9 | 18 | 585·1 | | 40 | 26·23 | 42 | 531·0 | 43 | 775·9 | 11 13 | 0 | 25 13·67 |
| | 20 | 23·27 | 22 | 514·2 | | | | 45 | 27·39 | 47 | 541·7 | 48 | 770·3 | | 15 | 11·37 |
| | 30 | 25·46 | 32 | 516·7 | | | | 50 | 27·53 | 52 | 542·4 | 53 | 768·8 | | 40 | 11·44 |
| | 40 | 24·39 | 42 | 513·9 | 43 | 632·5 | | | | 57 | 539·1 | 58 | 768·5 | 11 14 | 0 | 12·76 |
| | | | 52 | 528·6 | 53 | 628·3 | 9 5 | 0 | 22·89 | 2 | 537·8 | 3 | 769·3 | | | |
| 3 3 | 0 | 21·73 | 2 | 530·4 | 3 | 628·0 | | 10 | 23·14 | 12 | 534·0 | 13 | 769·5 | 12 10 | 0 | 25 12·04 |
| | | | 22 | 546·1 | 23 | 627·5 | | 30 | 21·12 | 32 | 537·2 | 33 | 756·1 | | 5 | 13·20 |
| | 25 | 21·53 | 27 | 544·4 | 28 | 632·1 | 9 6 | 0 | 22·50 | 2 | 573·4 | 3 | 725·4 | | 10 | 13·63 |
| | 30 | 20·62 | 32 | 529·7 | 33 | 639·3 | | 5 | 21·46 | 7 | 573·0 | 8 | 725·5 | | 15 | 14·13 |
| | 35 | 19·98 | 37 | 525·0 | 38 | 642·2 | | 10 | 21·86 | 12 | 573·7 | 13 | 725·9 | 12 11 | 0 | 15·74 |
| 3 4 | 0 | 19·79 | 2 | 537·1 | 3 | 641·8 | | | | 14 | 578·7 | | . | 12 15 | 0 | 19·91 |

BIFILAR. $k=0{\cdot}000140$. BALANCE. $k=0{\cdot}0000085$.

Aug. 2d 17h 15m. The magnets are evidently unsteady, but the variations seem small.
Aug. 9d 11h 25m. Clock 6s slow; set right.
Aug. 9d 14h. Magnets slightly disturbed from 14h till 16h; appearance somewhat like an Aurora to NW.; many shooting stars.
* See notes on the Aurora Borealis, *after* the *Extra Observations of Magnetometers*.

| Bifilar Corrected. | | Balance Corrected. | | Gött. Mean Time. | Declination. | | Bifilar Corrected. | | Balance Corrected. | | Gött. Mean Time. | Declination. | | Bifilar Corrected. | | Balance Corrected. | |
|---|---|---|---|---|---|---|---|---|---|---|---|---|---|---|---|---|---|
| Min. | Sc. Div. | Min. | Mic. Div. | d. h. | Min. | ° ′ | Min. | Sc. Div. | Min. | Mic. Div. | d. h. | Min. | ° ′ | Min. | Sc. Div. | Min. | Mic. Div. |
| 17 | 574·8 | 18 | 730·8 | 12 15 | 15 | 25 16·30 | 17 | 530·4 | 18 | 595·3 | 22 6 | | | 26 | 548·0 | | |
| 18 | 571·3 | | | | 20 | 15·27 | 22 | 531·1 | 23 | 594·2 | | 30 | 25 20·72 | 32 | 539·1 | 33 | 765·7 |
| 22 | 567·2 | 23 | 736·5 | | 25 | 14·04 | 27 | 528·5 | 28 | 595·6 | | 35 | 19·55 | 37 | 537·4 | 38 | 766·4 |
| 27 | 556·2 | 28 | 745·5 | | 30 | 12·78 | 32 | 527·5 | 33 | 596·8 | 22 7 | 0 | 18·10 | 2 | 531·9 | 3 | 762·1 |
| 32 | 551·6 | 33 | 753·4 | | 35 | 11·57 | 37 | 526·3 | 38 | 599·1 | | 10 | 16·82 | 12 | 532·2 | 13 | 754·3 |
| 37 | 552·8 | 38 | 756·6 | | 40 | 11·24 | 42 | 525·2 | 43 | 602·1 | | | | 17 | 536·3 | | |
| 42 | 552·5 | 43 | 758·8 | | 45 | 10·43 | 47 | 526·6 | 48 | 603·3 | | 20 | 17·83 | 22 | 537·6 | 23 | 741·3 |
| 47 | 552·8 | 48 | 759·1 | | 50 | 10·33 | 52 | 525·1 | 53 | 606·3 | | 30 | 17·83 | 32 | 537·0 | 33 | 733·9 |
| 52 | 555·1 | 53 | 756·3 | 12 16 | 0 | 10·68 | 2 | 525·7 | 3 | 611·9 | 22 8 | 0 | 14·82 | 2 | 545·5 | 3 | 708·1 |
| 57 | 555·3 | 58 | 754·0 | | 10 | 12·92 | 12 | 520·5 | 13 | 617·8 | 22 9 | 50 | 20·20 | | | | |
| 2 | 559·6 | 3 | 752·5 | | 15 | 12·92 | 17 | 519·7 | 18 | 617·9 | 22 10 | 0 | 09·03 | 2 | 535·2 | 3 | 625·1 |
| 2 | 549·2 | 3 | 727·2 | | 30 | 13·57 | 32 | 522·3 | 33 | 618·8 | | 5 | 04·28 | 7 | 544·0 | 8 | 622·8 |
| 2 | 558·1 | 3 | 669·0 | 12 17 | 0 | 14·64 | 2 | 527·2 | 3 | 617·7 | | 10 | 03·60 | 12 | 546·4 | 13 | 619·2 |
| 7 | 546·0 | 8 | 665·9 | | | | | | | | | 15 | 04·12 | 17 | 545·9 | 18 | 618·7 |
| 12 | 531·9 | 13 | 665·7 | 16 10 | 0 | 25 09·59 | 2 | 535·5 | 3 | 651·2 | | 20 | 05·58 | | | | |
| 17 | 529·9 | 18 | 664·6 | | 5 | 25 04·56 | 7 | 531·4 | 8 | 654·4 | | 25 | 06·81 | 27 | 536·6 | 28 | 622·2 |
| 22 | 528·1 | 23 | 662·8 | | 10 | 24 59·16 | 12 | 536·5 | 13 | 654·1 | | 30 | 08·08 | 32 | 535·8 | 33 | 624·2 |
| 27 | 532·6 | | | | 15 | 24 57·02 | 17 | 540·8 | 18 | 653·6 | | 35 | 09·77 | 37 | 539·5 | | |
| 47 | 532·3 | 48 | 658·9 | | 20 | 24 57·24 | 22 | 541·1 | 23 | 651·8 | | 45 | 14·78 | 47 | 543·9 | 48 | 621·8 |
| 2 | 529·2 | 3 | 659·0 | | 25 | 24 59·26 | 27 | 536·7 | 28 | 651·2 | 22 11 | 0 | 19·39 | 2 | 539·1 | 3 | 611·9 |
| 2 | 539·6 | 3 | 623·0 | | 30 | 25 00·60 | 32 | 534·0 | | | | 10 | 15·52 | 12 | 532·5 | 13 | 602·1 |
| 7 | 566·8 | 8 | 612·0 | | 35 | 01·04 | 37 | 533·3 | | | | 20 | 13·12 | 22 | 528·3 | 23 | 601·1 |
| 12 | 581·5 | 13 | 597·7 | | 40 | 01·99 | 42 | 533·2 | 43 | 647·1 | | 30 | 11·30 | 32 | 530·6 | 33 | 602·5 |
| 17 | 575·0 | 18 | 585·4 | | 45 | 02·94 | 47 | 533·7 | 48 | 644·5 | | 40 | 12·70 | 42 | 528·7 | 43 | 601·0 |
| 22 | 572·0 | 23 | 571·9 | | 50 | 04·10 | 52 | 532·1 | 53 | 642·6 | 22 12 | 0 | 12·13 | 2 | 523·7 | 3 | 602·1 |
| 27 | 561·5 | 28 | 562·4 | 16 11 | 0 | 05·79 | 2 | 532·1 | 3 | 635·1 | | 30 | 21·76 | 32 | 533·1 | 33 | 588·3 |
| 32 | 555·7 | 33 | 550·7 | | 10 | 07·99 | 12 | 530·9 | 13 | 634·1 | | 40 | 19·19 | 42 | 537·1 | 43 | 562·9 |
| 37 | 549·6 | 38 | 538·5 | | 20 | 10·45 | 22 | 532·5 | 23 | 632·5 | | 45 | 17·46 | 47 | 536·6 | 48 | 559·1 |
| 42 | 540·9 | 43 | 530·8 | | 35 | 13·64 | 37 | 533·0 | 38 | 627·9 | | 55 | 17·96 | 57 | 534·7 | | |
| 47 | 530·7 | 48 | 529·1 | 16 12 | 0 | 15·31 | 2 | 537·2 | 3 | 625·6 | 22 13 | 0 | 18·55 | 2 | 533·6 | 3 | 552·5 |
| 52 | 520·3 | 53 | 529·8 | 16 13 | 0 | 14·65 | 2 | 539·0 | 3 | 618·5 | | 30 | 19·46 | 32 | 531·4 | | |
| 57 | 513·5 | 58 | 532·9 | | 20 | 12·40 | 22 | 543·5 | 23 | 614·0 | 22 14 | 0 | 24·73 | 2 | 522·7 | 3 | 548·8 |
| 2 | 510·6 | 3 | 538·4 | 16 14 | 0 | 15·29 | 2 | 540·3 | 3 | 611·2 | | 10 | 26·01 | 12 | 519·7 | 13 | 538·4 |
| 12 | 515·4 | 13 | 546·5 | 16 15 | 0 | 10·70 | 2 | 532·5 | 3 | 622·5 | | 20 | 25·53 | 22 | 512·6 | 23 | 525·4 |
| 17 | 517·0 | 18 | 555·2 | | 30 | 11·15 | 32 | 535·6 | 33 | 628·3 | | 25 | 23·52 | 27 | 514·6 | 28 | 523·0 |
| 22 | 522·4 | 23 | 563·3 | 16 16 | 0 | 11·82 | 2 | 534·2 | 3 | 631·8 | | 35 | 22·94 | 37 | 510·1 | | |
| 27 | 529·2 | 28 | 566·9 | | | | | | | | | 45 | 21·12 | 47 | 515·4 | 48 | 522·2 |
| 32 | 533·0 | 33 | 569·7 | 17 12 | 0 | 25 17·42 | 2 | 535·7 | 3 | 617·9 | | 55 | 20·77 | 57 | 519·7 | 58 | 528·0 |
| 37 | 534·4 | | | | 35 | 21·09 | 37 | 532·3 | 38 | 619·4 | 22 15 | 0 | 20·72 | 2 | 525·0 | 3 | 534·0 |
| 2 | 526·3 | 3 | 580·5 | | | | | | | | | 20 | 20·67 | 22 | 527·8 | 23 | 557·7 |
| 32 | 520·2 | 33 | 598·9 | 19 9 | 0 | 25 15·65 | 2 | 541·6 | 3 | 634·1 | | 30 | 21·43 | 32 | 527·9 | 33 | 565·7 |
| 2 | 520·4 | 3 | 602·3 | | 15 | 13·99 | 17 | 541·2 | 18 | 634·4 | 22 16 | 0 | 18·84 | 2 | 531·0 | 3 | 586·4 |
| 2 | 515·6 | 3 | 635·0 | 19 10 | 0 | 16·08 | 2 | 538·6 | 3 | 633·4 | 22 20 | 0 | 19·44 | 2 | 521·7 | 3 | 643·9 |
| 27 | 516·1 | 28 | 638·6 | | | | | | | | | 10 | 19·75 | 12 | 518·4 | 13 | 645·6 |
| | | | | 22 2 | 0 | 25 25·47 | 2 | 545·0 | 3 | 619·4 | | 15 | 18·88 | 17 | 517·2 | | |
| 2 | 512·7 | 3 | 638·9 | | 30 | 25·94 | 32 | 546·6 | 33 | 628·3 | 22 21 | 0 | 19·44 | 2 | 509·2 | 3 | 645·9 |
| | | | | 22 3 | 0 | 26·60 | 2 | 540·0 | 3 | 642·9 | | 5 | 18·90 | 7 | 517·6 | | |
| 2 | 537·0 | 3 | 595·6 | 22 4 | 0 | 25·16 | 2 | 527·4 | 3 | 690·9 | | 11 | 21·53 | 12 | 518·4 | 13 | 638·1 |
| 12 | 533·0 | 13 | 597·9 | | | | 12 | 540·6 | 13 | 693·0 | | 20 | 20·58 | | | | |
| 32 | 532·4 | 33 | 606·3 | | | | | | | | | | | | | | |
| | | | | | 15 | 24·22 | 17 | 543·8 | 18 | 694·2 | | 40 | 20·15 | 42 | 518·1 | 43 | 638·7 |
| 2 | 531·6 | 3 | 589·7 | | 40 | 24·22 | | | 43 | 709·8 | 22 22 | 0 | 22·62 | 2 | 516·9 | 3 | 639·2 |
| 17 | 533·7 | 18 | 588·5 | 22 5 | 0 | 21·44 | 2 | 533·4 | 3 | 734·2 | | | | | | | |
| | | | | | 10 | 20·06 | 12 | 540·8 | 13 | 735·9 | 23 1 | 0 | 25 28·42 | 2 | 519·5 | 3 | 651·7 |
| 2 | 524·8 | 3 | 595·6 | | 20 | 20·65 | 22 | 540·4 | 23 | 737·9 | | 5 | 29·32 | 7 | 521·2 | | |
| | | | | | 30 | 20·85 | 32 | 545·7 | 33 | 737·0 | | 10 | 30·78 | 12 | 524·4 | 13 | 652·7 |
| 2 | 544·3 | 3 | 632·7 | | 40 | 20·79 | 42 | 557·8 | | | | 15 | 30·45 | 17 | 520·5 | | |
| 7 | 541·3 | 8 | 633·4 | | 50 | 22·10 | 52 | 554·7 | 53 | 742·5 | | 40 | 25·02 | 42 | 533·6 | 43 | 665·7 |
| | | | | 22 6 | 0 | 22·57 | 2 | 552·8 | 3 | 749·7 | | 50 | 25·19 | 52 | 527·1 | 53 | 673·6 |
| 17 | 536·7 | 18 | 635·6 | | 5 | 24·75 | 7 | 551·4 | 8 | 753·5 | 23 2 | 0 | 23·21 | 2 | 528·1 | 3 | 679·5 |
| 2 | 533·0 | 3 | 635·7 | | 10 | 24·19 | 12 | 544·6 | 13 | 757·3 | | 15 | 20·60 | 17 | 536·5 | 18 | 684·5 |
| 2 | 532·3 | 3 | 601·5 | | 15 | 22·10 | 17 | 545·5 | 18 | 760·0 | | 20 | 20·87 | 22 | 540·0 | | |

BIFILAR. $k=0{\cdot}000140$. BALANCE. $k=0{\cdot}0000085$.

| Gött. Mean Time. | Declination. | Bifilar Corrected. | | Balance Corrected. | |
|---|---|---|---|---|---|
| d. h. | Min. ° ′ | Min. | Sc. Div. | Min. | Mic. Div. |
| 23 2 | | 32 | 549·8 | 33 | 681·3 |
| | | 33 | 545·0 | | |
| | 35 25 23·01 | 37 | 557·0 | 38 | 680·0 |
| | 40 24·45 | 42 | 551·7 | 43 | 681·0 |
| | | 47 | 558·7 | 48 | 679·8 |
| | 50 23·85 | 52 | 553·1 | 53 | 681·7 |
| | 55 24·45 | 57 | 563·7 | 58 | 679·7 |
| | | 59 | 570·7 | | |
| 23 3 | 0 25·47 | 1 | 576·2 | | |
| | | 2 | 575·4 | 3 | 678·7 |
| | | 4 | 572·6 | | |
| | 5 24·39 | 7 | 569·3 | 8 | 684·0 |
| | 10 23·73 | 11 | 549·5 | | |
| | | 12 | 546·4 | 13 | 692·9 |
| | 15 23·81 | 16 | 538·2 | | |
| | | 17 | 538·9 | 18 | 698·1 |
| | | 19 | 540·0 | | |
| | 20 25·06 | 22 | 543·6 | 23 | 702·8 |
| | 25 22·74 | 27 | 542·4 | 28 | 711·6 |
| | 30 19·29 | 32 | 540·0 | 33 | 728·9 |
| | 35 16·36 | 37 | 534·3 | 38 | 751·6 |
| | 40 12·65 | 42 | 527·2 | 43 | 765·7 |
| | 45 08·01 | 47 | 538·4 | 48 | 764·3 |
| | 50 05·27 | 52 | 559·5 | 53 | 756·4 |
| | 55 08·68 | 57 | 560·5 | | |
| 23 4 | 0 13·00 | 2 | 556·1 | 3 | 746·8 |
| | | 7 | 558·1 | 8 | 739·7 |
| | 10 16·86 | 12 | 552·0 | 13 | 735·8 |
| | 15 18·55 | 17 | 535·0 | 18 | 730·8 |
| | 25 19·05 | 27 | 556·6 | 28 | 725·8 |
| | 45 20·72 | 47 | 557·6 | 48 | 726·0 |
| 23 5 | 0 22·94 | 2 | 555·4 | 3 | 734·2 |
| | 10 24·08 | 12 | 569·4 | 13 | 733·7 |
| | 15 25·43 | 16 | 564·6 | | |
| | | 17 | 561·1 | 18 | 746·5 |
| | | 19 | 556·9 | | |
| | 20 23·45 | 22 | 549·2 | 23 | 765·0 |
| | | 24 | 545·0 | | |
| | 25 15·56 | | | | |
| | 26 16·99 | 27 | 559·4 | 28 | 793·0 |
| | | 29 | 568·1 | | |
| | 30 11·72 | | | | |
| | 31 08·58 | 32 | 566·6 | 33 | 836·8 |
| | 33 03·40 | 34 | 571·0 | | |
| | 35 02·06 | | | 36½ | 829·3 |
| | 36 25 02·89 | 37 | 570·1 | 38 | 821·0 |
| | | 39 | 578·1 | 39½ | 809·9 |
| | 40 24 56·37 | | | 40½ | 802·2 |
| | 41 24 56·65 | | | 41½ | 798·0 |
| | | 42 | 588·6 | 43 | 789·4 |
| | | 44 | 591·9 | 45 | 775·2 |
| | 45 25 00·51 | 47 | 589·1 | 48 | 774·3 |
| | | 49 | 581·9 | | |
| | 50 08·26 | | | 51 | 777·0 |
| | | 52 | 576·2 | 53 | 776·8 |
| | | 54 | 571·0 | | |
| | 55 13·41 | 57 | 561·3 | 58 | 773·0 |
| 23 6 | 0 14·03 | 2 | 546·7 | 3 | 770·6 |
| | 5 17·39 | 7 | 560·7 | 8 | 764·9 |
| | 10 19·86 | 12 | 535·5 | 13 | 762·9 |
| | 15 19·96 | 17 | 530·0 | 18 | 757·7 |

| Gött. Mean Time. | Declination. | Bifilar Corrected. | | Balance Corrected. | |
|---|---|---|---|---|---|
| d. h. | Min. ° ′ | Min. | Sc. Div. | Min. | Mic. Div. |
| 23 6 | 20 25 20·18 | 22 | 526·0 | | |
| | 30 16·15 | 32 | 530·3 | 33 | 748·9 |
| | 40 17·36 | 42 | 534·7 | 43 | 733·1 |
| | 50 19·15 | 52 | 535·4 | 53 | 723·4 |
| 23 7 | 0 18·41 | 2 | 532·8 | 3 | 715·5 |
| 23 10 | 0 20·76 | 2 | 542·6 | 3 | 634·8 |
| | 20 20·11 | 22 | 537·8 | 23 | 625·5 |
| 23 11 | 0 16·86 | 2 | 532·3 | 3 | 638·6 |
| | 15 18·03 | 17 | 536·0 | | |
| 23 12 | 0 17·31 | 2 | 532·7 | 3 | 640·5 |
| 23 13 | 0 18·82 | 2 | 538·9 | 3 | 620·2 |
| | 30 16·12 | 32 | 530·0 | 33 | 613·2 |
| 23 14 | 0 24·08 | 2 | 532·2 | 3 | 602·8 |
| | 10 24·22 | 12 | 529·7 | 13 | 593·7 |
| | 25 18·60 | 27 | 527·2 | 28 | 582·2 |
| | 30 17·46 | 32 | 525·0 | 33 | 584·8 |
| | 35 16·25 | 37 | 527·3 | 38 | 585·6 |
| | 50 16·35 | 52 | 527·9 | 53 | 586·3 |
| 23 15 | 0 16·89 | 2 | 522·6 | 3 | 584·6 |
| 23 16 | 0 12·11 | 2 | 528·6 | 3 | 559·7 |
| | 7 10·09 | | | | |
| | 10 11·34 | 12 | 528·2 | 13 | 567·6 |
| | 15 11·07 | 17 | 529·7 | 18 | 569·4 |
| | 20 10·92 | | | | |
| 23 17 | 0 13·10 | 2 | 516·4 | 3 | 601·2 |
| 24 6 | 0 25 16·65 | 2 | 542·2 | 3 | 641·2 |
| | 20 14·77 | 22 | 537·5 | 23 | 654·5 |
| | 30 13·79 | 32 | 536·0 | 33 | 658·5 |
| 24 7 | 0 13·49 | 2 | 541·4 | 3 | 670·2 |
| | 50 10·77 | 52 | 543·1 | | |
| 24 8 | 0 12·20 | 2 | 535·4 | 3 | 684·5 |
| 24 9 | 0 14·89 | 2 | 535·8 | 3 | 662·9 |
| | 25 10·33 | 27 | 535·4 | 28 | 640·6 |
| | 30 08·29 | 32 | 539·3 | 33 | 634·6 |
| | 35 11·24 | 37 | 534·2 | 38 | 634·5 |
| | 40 12·36 | 42 | 525·6 | | |
| | 45 13·88 | 47 | 521·2 | 48 | 631·9 |
| | 50 15·27 | 52 | 515·2 | | |
| | 55 13·61 | 57 | 513·9 | 58 | 627·3 |
| 24 10 | 0 09·64 | 2 | 515·9 | 3 | 619·3 |
| | 5 05·94 | 7 | 523·1 | 8 | 608·2 |
| | 10 06·64 | 12 | 527·1 | 13 | 597·8 |
| | 15 09·32 | 17 | 524·9 | 18 | 592·9 |
| | 20 11·46 | 22 | 520·5 | 23 | 594·0 |
| | 25 11·57 | 27 | 516·1 | 28 | 596·9 |
| | 40 08·08 | 42 | 526·6 | 43 | 601·9 |
| | 55 12·16 | 57 | 529·2 | 58 | 605·7 |
| 24 11 | 0 12·89 | 2 | 529·1 | 3 | 605·7 |
| 26 12 | 0 25 12·69 | 2 | 535·5 | 3 | 617·2 |
| | 30 15·88 | 32 | 531·8 | 33 | 615·2 |
| 26 13 | 0 14·94 | 2 | 528·5 | 3 | 611·2 |
| 26 14 | 0 16·46 | 2 | 526·3 | 3 | 618·5 |
| | 10 20·23 | 12 | 525·5 | 13 | 620·4 |
| | 15 21·84 | | | | |
| | 21 22·58 | 22 | 523·9 | 23 | 619·2 |
| | 25 23·38 | | | | |
| | 30 23·22 | 32 | 526·0 | 33 | 615·9 |
| | 35 23·19 | | | | |
| 26 15 | 0 18·84 | 2 | 530·1 | 3 | 608·8 |

| Gött. Mean Time. | Declination. |
|---|---|
| d. h. | Min. ° ′ |
| 26 15 | 15 25 16·68 |
| 26 16 | 0 14·26 |
| 29 10 | 0 25 17·06 |
| | 20 11·14 |
| | 25 08·08 |
| | 30 05·85 |
| | 35 06·01 |
| | 40 07·32 |
| | 45 06·06 |
| | 50 06·39 |
| | 55 07·72 |
| 29 11 | 0 08·38 |
| | 25 12·38 |
| | 40 14·48 |
| | 45 13·90 |
| | 50 14·73 |
| | 55 13·72 |
| 29 12 | 0 13·46 |
| | 10 12·09 |
| | 20 12·72 |
| | 30 11·91 |
| | 40 09·57 |
| | 50 08·38 |
| 29 13 | 0 08·05 |
| | 10 05·92 |
| | 20 05·79 |
| | 30 06·76 |
| | 40 06·12 |
| | 50 05·15 |
| 29 14 | 0 13·67 |
| | 5 18·08 |
| | 10 20·69 |
| | 15 21·68 |
| | 20 20·42 |
| | 25 18·16 |
| | 30 16·08 |
| | 35 13·07 |
| | 40 10·13 |
| | 45 07·65 |
| | 50 06·74 |
| | 55 06·14 |
| 29 15 | 0 06·19 |
| | 5 05·45 |
| | 11 04·44 |
| | 15 04·64 |
| | 20 03·23 |
| | 25 03·65 |
| | 30 05·52 |
| | 35 07·27 |
| | 40 10·61 |
| | 45 13·79 |
| | 50 15·49 |
| | 55 17·70 |
| 29 16 | 0 18·13 |

BIFILAR. $k=0·000140$. BALANCE. $k=0·0000085$.

Aug. 23d 5h 20m—30m. Declination magnet vibrating 4′, bifilar magnet 12—20 div.
Aug. 24d 4h. Clock 12s slow; put right.

| Bifilar Corrected. | | Balance Corrected. | | Gött. Mean Time. | Declination. | | Bifilar Corrected. | | Balance Corrected. | | Gött. Mean Time. | Declination. | | Bifilar Corrected. | | Balance Corrected. | |
|---|---|---|---|---|---|---|---|---|---|---|---|---|---|---|---|---|---|
| Min. | Sc. Div. | Min. | Mic. Div. | d. h. | Min. | ° ′ | Min. | Sc. Div. | Min. | Mic. Div. | d. h. | Min. | ° ′ | Min. | Sc. Div. | Min. | Mic. Div. |
| 17 | 529·3 | 18 | 611·0 | 29 16 | 10 | 25 18·85 | 12 | 525·3 | 13 | 512·8 | 9 12 | 20 | 25 17·36 | 22 | 532·4 | 23 | 623·5 |
| 2 | 529·2 | 3 | 626·1 | | 30 | 14·31 | 32 | 529·3 | 33 | 536·9 | | 25 | 18·32 | 27 | 532·7 | 28 | 620·9 |
| | | | | | 50 | 13·56 | 52 | 526·2 | 53 | 555·6 | | 30 | 19·02 | 32 | 533·7 | 33 | 616·2 |
| 2 | 528·8 | 3 | 692·6 | 29 17 | 0 | 12·16 | 2 | 532·3 | 3 | 564·1 | | 35 | 19·96 | 37 | 536·5 | 38 | 611·3 |
| 22 | 536·1 | 23 | 671·2 | | 10 | 12·45 | 12 | 533·1 | 13 | 567·4 | | 40 | 21·66 | 42 | 537·0 | 43 | 605·4 |
| 27 | 540·7 | 28 | 662·8 | 29 18 | 0 | 09·86 | 2 | 533·6 | 3 | 606·5 | | 45 | 22·17 | 47 | 536·6 | 48 | 597·2 |
| 32 | 547·1 | 33 | 648·6 | | 15 | 13·23 | 17 | 531·4 | 18 | 610·0 | | 50 | 22·17 | 52 | 536·2 | 53 | 590·2 |
| 37 | 545·7 | 38 | 636·6 | 29 19 | 0 | 11·59 | 2 | 532·2 | 3 | 602·9 | | 55 | 22·10 | 57 | 532·4 | 58 | 583·2 |
| 42 | 543·8 | 43 | 623·4 | 29 20 | 0 | 12·29 | 2 | 510·2 | 3 | 621·6 | 9 13 | 0 | 20·79 | 2 | 532·1 | 3 | 575·5 |
| 47 | 541·9 | 48 | 618·7 | | 10 | 15·98 | 12 | 511·3 | 13 | 625·2 | | 5 | 18·97 | 7 | 533·2 | 8 | 570·1 |
| 52 | 539·3 | 53 | 613·0 | | 15 | 17·06 | 17 | 513·5 | | | | 10 | 17·44 | 12 | 533·3 | 13 | 566·2 |
| 57 | 540·0 | 58 | 604·2 | | 20 | 17·78 | 22 | 509·9 | 23 | 623·6 | | 15 | 16·10 | 17 | 536·2 | 18 | 564·5 |
| 2 | 538·5 | 3 | 597·4 | | 30 | 15·71 | 32 | 511·1 | | | | 20 | 15·24 | 22 | 538·2 | 23 | 564·7 |
| 27 | 542·2 | 28 | 574·8 | | 45 | 17·37 | 47 | 515·2 | 48 | 620·3 | | 30 | 13·39 | 32 | 538·0 | 33 | 571·0 |
| 42 | 541·8 | 43 | 551·9 | 29 21 | 0 | 17·93 | 2 | 508·5 | 3 | 624·9 | | 45 | 14·53 | 47 | 537·0 | 48 | 579·3 |
| 47 | 551·6 | 48 | 541·0 | | | | | | | | 9 14 | 0 | 15·67 | 2 | 535·9 | 3 | 581·7 |
| 52 | 548·9 | 53 | 529·4 | 30 1 | 0 | 25 28·94 | 2 | 512·3 | 3 | 635·8 | | | | | | | |
| 57 | 544·2 | 58 | 523·1 | | 30 | 31·43 | 32 | 506·7 | 33 | 648·5 | 14 4 | 0 | 25 21·63 | 2 | 536·0 | 3 | 648·2 |
| 2 | 535·7 | 3 | 522·2 | 30 2 | 0 | 28·02 | 2 | 526·5 | 3 | 652·7 | | 5 | 20·94 | 7 | 534·3 | 8 | 649·4 |
| 12 | 530·6 | 13 | 532·3 | | 30 | 26·77 | 32 | 533·5 | 33 | 654·0 | 14 5 | 0 | 18·88 | 2 | 529·3 | 3 | 662·3 |
| 22 | 536·4 | 23 | 535·4 | | 40 | 27·19 | 42 | 537·6 | 43 | 658·3 | 14 7 | 0 | 11·91 | 2 | 537·5 | 3 | 673·0 |
| 32 | 532·6 | 33 | 537·8 | | 45 | 26·23 | 47 | 530·1 | 48 | 661·6 | | 40 | 07·44 | 42 | 535·1 | 43 | 672·1 |
| 42 | 527·2 | 43 | 539·0 | 30 3 | 0 | 25·73 | 2 | 531·9 | 3 | 664·3 | 14 8 | 0 | 08·68 | 2 | 545·8 | 3 | 663·0 |
| 52 | 526·0 | | | 30 4 | 0 | 21·51 | 2 | 554·1 | 3 | 662·2 | | 30 | 11·37 | 32 | 544·2 | | |
| 2 | 528·8 | 3 | 528·8 | | 30 | 22·40 | 32 | 539·2 | 33 | 679·3 | 14 9 | 0 | 17·33 | 2 | 542·8 | 3 | 641·8 |
| 12 | 531·0 | 13 | 522·8 | | 45 | 19·86 | 47 | 533·8 | 48 | 680·8 | | | | | | | |
| 22 | 520·1 | 23 | 524·8 | | | | 52 | 547·1 | 53 | 682·1 | 16 12 | 0 | 25 14·17 | 2 | 541·3 | 3 | 601·9 |
| 32 | 521·3 | 33 | 526·6 | 30 5 | 0 | 18·87 | 2 | 533·8 | 3 | 688·8 | | 15 | 11·32 | 17 | 534·2 | 18 | 598·8 |
| 42 | 525·0 | 43 | 529·4 | | 30 | 17·31 | 32 | 553·6 | 33 | 680·5 | | 20 | 09·98 | 22 | 533·5 | | |
| 52 | 522·3 | 53 | 534·7 | | 45 | 17·96 | 47 | 545·3 | 48 | 694·3 | | 25 | 09·64 | 27 | 531·2 | | |
| 2 | 520·5 | 3 | 539·9 | 30 6 | 0 | 16·30 | 2 | 546·9 | 3 | 702·6 | | 30 | 08·82 | 32 | 528·2 | | |
| | | | | | | | 52 | 549·0 | 53 | 728·4 | | 35 | 08·08 | 37 | 526·7 | 38 | 598·6 |
| 12 | 528·7 | 13 | 520·8 | | 55 | 12·31 | 57 | 543·7 | | | | 40 | 08·72 | 42 | 526·3 | | |
| 17 | 534·0 | 18 | 505·2 | 30 7 | 0 | 13·49 | 2 | 539·5 | 3 | 721·0 | | 45 | 09·79 | | | | |
| 22 | 533·6 | 23 | 488·7 | | | | | | | | | 46 | 11·27 | 47 | 525·6 | | |
| 27 | 535·5 | 28 | 475·5 | 2 14 | 0 | 25 17·44 | 2 | 534·5 | 3 | 604·5 | | | | 49 | 523·2 | | |
| 32 | 532·0 | 33 | 462·4 | | 10 | 15·59 | 12 | 533·6 | | | | 50 | 14·30 | 52 | 522·8 | 53 | 593·6 |
| 37 | 529·0 | 38 | 446·2 | 2 15 | 0 | 12·63 | 2 | 525·5 | 3 | 618·6 | | 55 | 15·74 | 57 | 528·6 | 58 | 584·8 |
| 42 | 528·0 | 43 | 434·3 | | | | | | | | 16 13 | 0 | 14·75 | 2 | 540·1 | 3 | 572·0 |
| 47 | 527·3 | 48 | 433·8 | 4 10 | 0 | 25 13·96 | 2 | 540·6 | 3 | 573·6 | | 5 | 12·26 | 7 | 546·2 | 8 | 560·9 |
| 52 | 530·0 | 53 | 438·0 | | 11 | 18·05 | 12 | 534·0 | 13 | 571·7 | | 10 | 11·54 | 12 | 551·1 | 13 | 553·5 |
| 57 | 531·3 | 58 | 443·9 | | 15 | 18·60 | 17 | 527·6 | 18 | 574·1 | | 15 | 11·79 | 17 | 550·8 | | |
| 2 | 529·7 | 3 | 446·9 | | 20 | 17·20 | 22 | 523·4 | 23 | 579·6 | | 20 | 11·49 | 22 | 549·3 | 23 | 546·0 |
| | | | | | 25 | 15·14 | 27 | 523·3 | 28 | 582·3 | | 25 | 11·35 | 27 | 546·6 | 28 | 545·8 |
| 12 | 528·6 | 13 | 454·2 | | 30 | 12·43 | 32 | 526·8 | 33 | 586·7 | | 30 | 10·60 | 32 | 542·3 | | |
| 17 | 523·4 | 18 | 458·9 | | 35 | 12·02 | 37 | 529·6 | 38 | 590·6 | | 35 | 10·07 | 37 | 538·6 | 38 | 543·9 |
| 22 | 509·4 | 23 | 466·6 | | 40 | 12·11 | 42 | 529·9 | 43 | 595·9 | | 40 | 09·33 | 42 | 535·7 | | |
| 24 | 504·7 | | | | 50 | 12·23 | 52 | 531·7 | 53 | 603·2 | | 45 | 08·33 | 47 | 533·3 | | |
| 27 | 498·6 | 28 | 478·6 | 4 11 | 0 | 13·56 | 2 | 532·7 | 3 | 608·2 | 16 14 | 0 | 06·97 | 2 | 528·2 | 3 | 548·9 |
| 29 | 494·4 | | | | 40 | 16·72 | 42 | 533·5 | 43 | 620·2 | | 15 | 06·06 | 17 | 540·8 | 18 | 557·2 |
| 32 | 490·6 | 33 | 490·7 | 4 12 | 0 | 16·86 | 2 | 533·3 | 3 | 620·1 | | 30 | 06·59 | 32 | 524·3 | 33 | 562·7 |
| 34 | 488·5 | | | | | | | | | | 16 15 | 0 | 08·08 | 2 | 526·6 | 3 | 576·4 |
| 37 | 493·2 | 38 | 510·7 | 7 12 | 0 | 25 12·38 | 2 | 533·5 | 3 | 585·4 | 16 16 | 0 | 12·08 | 2 | 533·1 | 3 | 591·4 |
| 39 | 498·1 | | | | 20 | 10·72 | 22 | 536·0 | 23 | 594·9 | | 30 | 13·37 | 32 | 535·3 | 33 | 599·1 |
| 42 | 500·4 | 43 | 528·7 | | | | | | | | 16 17 | 0 | 12·15 | 2 | 535·4 | 3 | 601·3 |
| 44 | 496·1 | | | 9 7 | 0 | 25 08·52 | 2 | 531·8 | 3 | 662·2 | | | | | | | |
| 47 | 499·3 | 48 | 527·8 | | 10 | 07·91 | 12 | 536·0 | 13 | 660·2 | 17 15 | 0 | 25 16·46 | 2 | 532·9 | 3 | 604·1 |
| 49 | 503·6 | | | | 45 | 13·93 | 47 | 535·0 | 48 | 651·9 | | 30 | 12·85 | 32 | 540·4 | 33 | 585·4 |
| 52 | 506·6 | 53 | 530·4 | 9 8 | 0 | 14·87 | 2 | 536·7 | 3 | 647·8 | | 40 | 10·16 | 42 | 538 0 | 43 | 583·8 |
| 57 | 509·9 | 58 | 525·7 | | | | | | | | | 45 | 09·42 | 47 | 535·8 | 48 | 585·1 |
| 2 | 516·9 | 3 | 518·5 | 9 12 | 0 | 25 15·11 | 2 | 530·4 | 3 | 628·4 | | 50 | 09·06 | 52 | 545·2 | 53 | 586·9 |

BIFILAR. $k$=0·000140. BALANCE. $k$=0·0000085.

Aug. 30d 7h 30m. Clock 5s slow; put right.
Sept. 2d 14h. A slight motion in the magnets at this time, and for some hours after, but the changes were small.
Sept. 16d 12h 45m. The declination seems to have been about 25° 07′ at 45½m.

| Gött. Mean Time. | Declination. | | Bifilar Corrected. | | Balance Corrected. | |
|---|---|---|---|---|---|---|
| d. h. | Min. | ° ′ | Min. | Sc. Div. | Min. | Mic. Div. |
| 17 15 | 55 | 25 08·73 | 57 | 535·1 | 58 | 587·0 |
| 17 16 | 0 | 08·73 | 2 | 534·3 | 3 | 589·5 |
| | 10 | 08·75 | 12 | 532·5 | 13 | 592·5 |
| | 35 | 10·38 | 37 | 531·1 | 38 | 597·9 |
| 17 17 | 0 | 11·79 | 2 | 532·0 | 3 | 604·1 |
| 19 13 | 0 | 25 12·89 | 2 | 535·8 | 3 | 608·1 |
| | 15 | 10·43 | 17 | 540·5 | 18 | 601·3 |
| | 20 | 10·45 | 22 | 539·0 | | |
| | 30 | 10·90 | 32 | 532·4 | 33 | 603·2 |
| 19 14 | 0 | 11·42 | 2 | 539·6 | 3 | 586·3 |
| | 20 | 08·03 | 22 | 534·1 | 23 | 577·8 |
| | 30 | 07·44 | 32 | 529·0 | | |
| | 45 | 08·75 | 47 | 521·0 | 48 | 577·0 |
| 19 15 | 0 | 10·38 | 2 | 513·5 | 3 | 567·2 |
| | 10 | 13·05 | 12 | 501·6 | 13 | 557·6 |
| | 15 | 15·47 | 17 | 498·8 | 18 | 551·2 |
| | 20 | 16·53 | 22 | 497·2 | 23 | 540·8 |
| | 25 | 18·13 | 27 | 504·5 | 28 | 535·1 |
| | 30 | 19·39 | 32 | 512·1 | 33 | 530·6 |
| | 35 | 20·09 | 37 | 520·5 | 38 | 525·1 |
| | 40 | 20·16 | 42 | 526·3 | 43 | 516·6 |
| | 45 | 18·72 | 47 | 535·5 | 48 | 507·8 |
| | 50 | 16·57 | 52 | 540·1 | 53 | 501·1 |
| | 55 | 14·51 | 57 | 536·7 | 58 | 502·2 |
| 19 16 | 0 | 10·16 | 2 | 538·1 | 3 | 506·7 |
| | 30 | 05·69 | 32 | 536·7 | 33 | 537·2 |
| 19 17 | 0 | 08·26 | 2 | 535·3 | 3 | 555·8 |
| 19 23 | 0 | 25 21·53 | 2 | 502·7 | 3 | 609·5 |
| | 20 | 24·89 | 22 | 502·4 | 23 | 613·6 |
| | 30 | 26·84 | 32 | 504·1 | 33 | 602·7 |
| | 46 | 28·49 | 47 | 502·1 | 48 | 612·5 |
| | 55 | 29·39 | 57 | 509·3 | | |
| 20 0 | 0 | 29·53 | 2 | 507·9 | 3 | 612·1 |
| | 10 | 28·62 | 12 | 511·9 | 13 | 611·4 |
| | 20 | 28·53 | 22 | 511·9 | 23 | 610·2 |
| 20 1 | 0 | 23·24 | 2 | 516·7 | 3 | 609·8 |
| | 30 | 24·42 | 32 | 521·9 | 33 | 610·5 |
| 20 2 | 0 | 23·65 | 2 | 526·8 | 3 | 608·3 |
| 20 5 | 0 | 18·65 | 2 | 542·8 | 3 | 688·5 |
| | 10 | 18·74 | 12 | 537·6 | 13 | 698·3 |
| | 45 | 20·62 | 47 | 526·2 | 48 | 718·7 |
| | 50 | 19·71 | 52 | 527·9 | 53 | 714·5 |
| | 55 | 20·99 | 57 | 537·2 | 58 | 707·5 |
| 20 6 | 0 | 21·88 | 2 | 534·5 | 3 | 707·7 |
| | 5 | 21·76 | 7 | 527·6 | 8 | 705·3 |
| | 10 | 19·55 | 12 | 534·3 | 13 | 702·3 |
| | 15 | 18·84 | 17 | 536·7 | 18 | 699·6 |
| | 20 | 18·16 | 22 | 543·4 | 23 | 696·2 |
| | 25 | 19·37 | 27 | 545·5 | 28 | 694·4 |
| | 30 | 19·56 | 32 | 541·5 | 33 | 695·9 |
| | 35 | 18·58 | 37 | 537·3 | 38 | 698·6 |
| | 40 | 17·49 | 42 | 540·2 | 43 | 705·0 |
| | 45 | 17·42 | 47 | 534·9 | 48 | 716·7 |
| | 50 | 14·98 | 52 | 528·1 | 53 | 730·6 |
| | 55 | 10·90 | 57 | 533·7 | 58 | 732·2 |
| 20 7 | 0 | 07·42 | 2 | 532·7 | 3 | 734·1 |
| | 5 | 07·20 | 7 | 529·8 | 8 | 734·2 |
| | 10 | 06·66 | 12 | 532·7 | 13 | 738·7 |
| | 15 | 06·93 | 17 | 527·6 | 18 | 746·0 |

| Gött. Mean Time. | Declination. | | Bifilar Corrected. | | Balance Corrected. | |
|---|---|---|---|---|---|---|
| d. h. | Min. | ° ′ | Min. | Sc. Div. | Min. | Mic. Div. |
| 20 7 | 20 | 25 03·04 | 22 | 526·0 | 23 | 744·7 |
| | 25 | 25 01·86 | 27 | 528·3 | 28 | 743·2 |
| | 30 | 24 58·25 | 32 | 521·1 | | |
| | 34 | 51·94 | | | | |
| | 35 | 51·07 | | | | |
| | 36 | 51·02 | 37 | 535·2 | | |
| | 37 | 51·19 | | | 38 | 730·5 |
| | | | 39 | 534·8 | | |
| | 40 | 52·53 | 42 | 533·3 | 43 | 716·3 |
| | 45 | 52·53 | 47 | 533·0 | | |
| | 49 | 50·67 | | | | |
| | 50 | 50·72 | 52 | 544·8 | | |
| | 51 | 50·93 | | | 53 | 692·1 |
| | 55 | 24 54·18 | 57 | 550·0 | 58 | 682·1 |
| 20 8 | 0 | 25 00·82 | 2 | 537·3 | 3 | 677·9 |
| | 5 | 00·98 | 7 | 530·6 | 8 | 671·9 |
| | 10 | 01·59 | 12 | 536·3 | 13 | 662·2 |
| | 15 | 05·30 | 17 | 536·5 | 18 | 652·5 |
| | 20 | 09·19 | 22 | 529·1 | 23 | 647·3 |
| | 25 | 09·03 | 27 | 527·0 | 28 | 638·1 |
| | 30 | 07·37 | 32 | 539·3 | 33 | 627·6 |
| | 35 | 13·14 | 37 | 538·6 | 38 | 623·4 |
| | 40 | 21·01 | 42 | 520·6 | 43 | 625·0 |
| | 45 | 22·47 | 47 | 501·4 | 48 | 637·6 |
| | 50 | 16·70 | 52 | 498·7 | 53 | 653·3 |
| | 55 | 08·23 | 57 | 514·8 | 58 | 651·5 |
| 20 9 | 0 | 08·34 | 2 | 524·3 | 3 | 651·0 |
| | 5 | 10·92 | 7 | 524·5 | 8 | 652·1 |
| | 10 | 12·43 | 12 | 525·9 | | |
| | 15 | 13·34 | 17 | 525·3 | 18 | 653·1 |
| | | | 27 | 535·8 | 28 | 647·2 |
| | 30 | 16·75 | 32 | 536·1 | | |
| | 35 | 17·33 | 37 | 533·6 | 38 | 645·1 |
| | 45 | 16·01 | 47 | 525·7 | 48 | 646·6 |
| 20 10 | 0 | 14·28 | 2 | 529·9 | 3 | 647·8 |
| 20 11 | 0 | 22·87 | 2 | 535·0 | 3 | 587·4 |
| | 10 | 18·16 | 12 | 533·8 | 13 | 578·8 |
| | 15 | 15·85 | 17 | 534·8 | 18 | 580·1 |
| | 30 | 14·04 | 32 | 531·9 | 33 | 588·3 |
| | 40 | 16·92 | 42 | 535·6 | 43 | 593·5 |
| | 45 | 18·77 | 47 | 537·0 | 48 | 589·9 |
| | 50 | 19·34 | 52 | 537·8 | 53 | 586·8 |
| | 55 | 20·09 | 57 | 537·5 | 58 | 584·2 |
| 20 12 | 0 | 19·95 | 2 | 538·9 | 3 | 581·4 |
| | 15 | 18·23 | 17 | 532·9 | 18 | 581·1 |
| | 30 | 16·13 | 32 | 529·5 | 33 | 581·9 |
| 20 13 | 0 | 14·96 | 2 | 530·0 | 3 | 596·5 |
| 20 19 | 0 | 17·22 | 2 | 514·7 | 3 | 630·1 |
| | 30 | 19·51 | 32 | 521·4 | 33 | 631·4 |
| 20 20 | 0 | 16·36 | 2 | 526·7 | 3 | 631·9 |
| 21 9 | 0 | 25 10·30 | 2 | 534·9 | 3 | 649·1 |
| | 26 | 12·04 | 27 | 533·2 | 28 | 644·0 |
| 21 10 | 0 | 11·96 | 2 | 536·5 | 3 | 643·2 |
| 22 20 | 0 | 25 19·55 | 2 | 510·7 | 3 | 632·3 |
| | 10 | 21·57 | 12 | 513·1 | 13 | 632·4 |
| | 15 | 21·93 | 17 | 514·6 | | |
| | 20 | 21·64 | 22 | 516·7 | 23 | 630·0 |
| | 30 | 20·65 | 32 | 522·4 | | |
| 22 21 | 0 | 18·95 | 2 | 522·4 | 3 | 622·3 |

| Gött. Mean Time. | Declination. | |
|---|---|---|
| d. h. | Min. | ° ′ |
| 22 21 | 15 | 25 17·20 |
| 22 22 | 0 | 18·60 |
| 23 1 | 0 | 24·66 |
| | 15 | 21·44 |
| | 20 | 21·70 |
| | 25 | 20·96 |
| 23 2 | 0 | 19·64 |
| | 10 | 20·72 |
| 23 3 | 0 | 21·41 |
| 23 7 | 0 | 13·86 |
| | 15 | 11·41 |
| | 20 | 12·72 |
| | 25 | 13·44 |
| | 30 | 13·74 |
| | 35 | 12·06 |
| | 40 | 12·01 |
| 23 8 | 0 | 12·70 |
| | 35 | 16·59 |
| 23 9 | 0 | 16·23 |
| 24 8 | 0 | 25 10·72 |
| | 10 | 11·37 |
| | 20 | 13·50 |
| | 30 | 13·76 |
| 24 9 | 0 | 14·31 |
| 24 15 | 0 | 25 17·94 |
| | 10 | 19·04 |
| | 21 | 20·85 |
| | 25 | 20·79 |
| | 35 | 18·99 |
| | 40 | 18·34 |
| 24 16 | 0 | 17·22 |
| 25 8 | 0 | 25 13·23 |
| | 10 | 09·20 |
| | 15 | 08·77 |
| | 20 | 06·36 |
| | 25 | 02·37 |
| | 30 | 01·41 |
| | 35 | 02·22 |
| | 40 | 05·42 |
| | 45 | 07·47 |
| | 55 | 08·75 |
| 25 9 | 0 | 09·32 |
| | 15 | 09·96 |
| 25 10 | 0 | 25 10·03 |
| 25 11 | 0 | 24 59·06 |
| | 5 | 56·38 |
| | 10 | 55·96 |
| | 15 | 57·98 |
| | 20 | 24 59·39 |
| | 25 | 25 01·36 |
| | 30 | 01·92 |
| | 35 | 02·03 |
| | 40 | 02·69 |
| | 45 | 02·32 |
| 25 12 | 0 | 00·53 |
| | 5 | 00·22 |
| | 15 | 01·49 |
| | 25 | 04·15 |

BIFILAR. $k=0·000140$. BALANCE. $k=0·0000085$.

| Bifilar Corrected. | | Balance Corrected. | | Gött. Mean Time. | Declination. | | Bifilar Corrected. | | Balance Corrected. | | Gött. Mean Time. | Declination. | | Bifilar Corrected. | | Balance Corrected. | |
|---|---|---|---|---|---|---|---|---|---|---|---|---|---|---|---|---|---|
| Min. | Sc. Div. | Min. | Mic. Div. | d. h. | Min. | ° ′ | Min. | Sc. Div. | Min. | Mic. Div. | d. h. | Min. | ° ′ | Min. | Sc. Div. | Min. | Mic. Div. |
| 17 | 524·8 | 18 | 621·7 | 25 12 | 30 | 25 00·15 | 32 | 505·1 | 33 | 490·9 | 26 0 | 10 | 25 25·02 | 12 | 518·4 | | |
| 2 | 523·9 | 3 | 622·8 | | 35 | 25 02·46 | 37 | 498·4 | 38 | 492·6 | | 20 | 24·62 | 22 | 518·2 | | |
| 2 | 523·4 | 3 | 635·8 | | 40 | 25 00·10 | 42 | 500·0 | 43 | 497·5 | 26 1 | 0 | 23·65 | 2 | 534·4 | 3 | 609·5 |
| 17 | 521·2 | 18 | 641·2 | | 45 | 24 58·58 | 47 | 499·7 | 48 | 495·7 | | 31 | 27·84 | 32 | 542·0 | 33 | 617·9 |
| 22 | 527·5 | 23 | 641·7 | | 50 | 24 59·32 | 52 | 503·9 | 53 | 493·0 | | 35 | 28·04 | 37 | 540·0 | 38 | 619·9 |
| 27 | 530·2 | | | | 55 | 25 00·33 | 57 | 507·9 | 58 | 492·6 | | 40 | 28·01 | 42 | 540·7 | 43 | 623·0 |
| 2 | 530·6 | 3 | 643·8 | 25 13 | 0 | 03·58 | 2 | 509·2 | 3 | 488·2 | 26 2 | 0 | 27·48 | 2 | 529·8 | 3 | 629·2 |
| 12 | 537·8 | 13 | 643·3 | | 5 | 07·51 | 7 | 500·5 | 8 | 484·9 | 26 3 | 0 | 25·26 | 2 | 534·5 | 3 | 630·6 |
| 2 | 535·5 | 3 | 650·0 | | 10 | 09·56 | 12 | 492·0 | 13 | 477·4 | 26 4 | 0 | 14·64 | 2 | 527·8 | 3 | 766·0 |
| 2 | 532·9 | 3 | 645·7 | | 15 | 09·59 | 17 | 494·2 | 18 | 478·5 | | 5 | 11·28 | 7 | 525·2 | 8 | 767·9 |
| 17 | 543·3 | 18 | 644·5 | | 20 | 12·82 | 22 | 499·4 | 23 | 488·3 | | 10 | 09·74 | 12 | 523·9 | 13 | 760·9 |
| 22 | 543·5 | | | | 25 | 17·81 | 27 | 497·6 | 28 | 487·3 | | 15 | 14·17 | 17 | 523·8 | 18 | 754·6 |
| 27 | 542·5 | | | | 30 | 21·97 | 32 | 493·2 | 33 | 478·8 | | 20 | 18·05 | 22 | 540·0 | 23 | 745·8 |
| 32 | 542·0 | 33 | 645·2 | | 35 | 24·43 | 37 | 491·2 | 38 | 463·5 | | 25 | 20·11 | 27 | 549·5 | 28 | 745·3 |
| 37 | 542·5 | | | | 40 | 26·47 | 42 | 489·8 | 43 | 439·6 | | 30 | 21·70 | 32 | 552·0 | 33 | 756·2 |
| | | | | | 45 | 27·31 | 47 | 493·4 | 48 | 417·4 | | 35 | 21·61 | 37 | 541·2 | 38 | 787·1 |
| 2 | 542·6 | 3 | 642·1 | | 50 | 26·03 | 52 | 492·2 | 53 | 412·4 | | | | 39 | 534·2 | | |
| 37 | 538·4 | 38 | 636·6 | | 55 | 21·66 | 57 | 507·4 | 58 | 407·1 | | 40 | 16·84 | 42 | 532·1 | 43 | 799·9 |
| 2 | 537·4 | 3 | 635·8 | 25 14 | 0 | 20·55 | 2 | 515·6 | 3 | 415·0 | | | | 44 | 537·8 | | |
| | | | | | 10 | 17·93 | 12 | 530·4 | 13 | 422·6 | | 45 | 15·47 | 47 | 544·2 | 48 | 797·2 |
| 2 | 537·3 | 3 | 623·1 | | 15 | 16·65 | 17 | 533·6 | 18 | 426·0 | | 50 | 17·02 | 52 | 546·9 | 53 | 795·6 |
| 12 | 542·8 | 13 | 621·8 | | 25 | 15·56 | 27 | 538·7 | | | | 55 | 19·02 | 57 | 549·0 | 58 | 796·4 |
| 22 | 540·3 | 23 | 621·0 | | 45 | 15·39 | 47 | 527·1 | 48 | 432·0 | 26 5 | 0 | 18·50 | 2 | 564·1 | 3 | 785·3 |
| 32 | 539·4 | | | 25 15 | 0 | 14·64 | 2 | 524·4 | 3 | 434·2 | | 5 | 23·21 | 7 | 561·9 | 8 | 790·3 |
| 2 | 538·1 | 3 | 617·0 | | 30 | 14·98 | 32 | 531·7 | 33 | 429·1 | | 10 | 23·92 | 12 | 559·1 | 13 | 801·1 |
| | | | | 25 16 | 0 | 18·16 | 2 | 524·8 | 3 | 445·1 | | 15 | 25·19 | 17 | 549·9 | 18 | 827·3 |
| 2 | 524·3 | 3 | 611·9 | 25 17 | 0 | 08·01 | 2 | 542·2 | 3 | 468·6 | | 20 | 18·60 | 22 | 535·0 | 23 | 859·7 |
| 12 | 526·0 | 13 | 609·0 | | 10 | 06·12 | 12 | 541·7 | 13 | 480·5 | | | | 24 | 542·7 | | |
| 22 | 525·8 | 23 | 606·8 | | 20 | 07·11 | 22 | 539·0 | 23 | 493·9 | | 25 | 09·17 | 27 | 553·0 | 28 | 833·7 |
| 27 | 527·1 | | | | 30 | 08·28 | 32 | 541·6 | 33 | 499·7 | | | | 29 | 556·3 | | |
| 37 | 531·4 | 38 | 597·8 | | 45 | 10·23 | 47 | 543·8 | 48 | 507·7 | | 30 | 22·53 | | | | |
| 42 | 530·3 | 43 | 596·1 | 25 18 | 0 | 09·49 | 2 | 540·5 | 3 | 512·7 | | 31 | 24·72 | 32 | 556·0 | 33 | 857·5 |
| 2 | 527·9 | 3 | 594·4 | | 15 | 12·45 | 17 | 535·3 | 18 | 526·0 | | | | 34 | 549·4 | | |
| | | | | | 30 | 12·89 | 32 | 536·9 | 33 | 535·1 | | 35 | 25·83 | 37 | 550·7 | 38 | 929·5 |
| 2 | 538·0 | 3 | 640·3 | 25 19 | 0 | 16·15 | 2 | 538·6 | 3 | 538·6 | | | | 39 | 544·2 | | |
| 12 | 528·0 | 13 | 649·8 | | 20 | 18·45 | 22 | 521·3 | 23 | 549·3 | | 40 | 13·29 | | | 41 | 930·9 |
| 17 | 522·2 | 18 | 662·6 | | 30 | 20·18 | 32 | 509·5 | 33 | 555·3 | | 41 | 10·83 | 42 | 526·2 | 43 | 907·9 |
| 22 | 520·7 | 23 | 666·2 | | 35 | 18·82 | 37 | 505·3 | 38 | 557·3 | | | | 44 | 527·7 | | |
| 27 | 530·8 | 28 | 666·6 | | 40 | 19·64 | 42 | 501·8 | 43 | 559·3 | | 45 | 06·44 | | | | |
| 32 | 539·0 | 33 | 664·2 | | 45 | 19·61 | 47 | 501·5 | 48 | 560·8 | | 46 | 08·09 | 47 | 543·6 | 48 | 840·4 |
| 37 | 543·3 | 38 | 661·3 | | 50 | 18·20 | 52 | 503·9 | 53 | 560·8 | | | | 49 | 547·7 | | |
| 42 | 539·9 | 43 | 658·1 | | 55 | 15·27 | 57 | 510·4 | 58 | 557·6 | | 50 | 16·05 | 52 | 551·1 | 53 | 817·9 |
| 47 | 538·5 | 48 | 653·7 | 25 20 | 0 | 14·17 | 2 | 515·6 | 3 | 558·6 | | 55 | 20·08 | 57 | 548·8 | 58 | 809·0 |
| 57 | 534·3 | 58 | 644·1 | | 10 | 15·89 | 12 | 522·1 | 13 | 564·6 | 26 6 | 0 | 19·88 | 2 | 550·2 | 3 | 800·8 |
| 2 | 529·6 | 3 | 643·9 | | 20 | 18·14 | 22 | 524·3 | 23 | 569·9 | | 5 | 19·58 | 7 | 539·6 | 8 | 800·3 |
| 17 | 527·3 | 18 | 639·5 | 25 21 | 0 | 18·47 | 2 | 533·0 | 3 | 577·3 | | 10 | 18·97 | 12 | 536·5 | 13 | 806·8 |
| 2 | 525·2 | 3 | 639·4 | | 10 | 22·72 | 12 | 523·3 | 13 | 582·5 | | 15 | 19·82 | 17 | 537·2 | 18 | 828·6 |
| 2 | 533·9 | 3 | 583·3 | | 15 | 23·38 | 17 | 518·8 | 18 | 582·0 | | 20 | 19·98 | 22 | 523·7 | 23 | 861·7 |
| 7 | 531·2 | 8 | 578·2 | | 20 | 21·17 | 22 | 518·6 | 23 | 579·5 | | 25 | 06·53 | 27 | 536·0 | 28 | 841·5 |
| 12 | 529·2 | 13 | 572·9 | | 25 | 21·03 | 27 | 518·8 | 28 | 580·3 | | 30 | 04·08 | 32 | 537·0 | 33 | 820·8 |
| 17 | 521·8 | 18 | 563·5 | | 30 | 20·82 | | | | | | 35 | 05·18 | 37 | 536·0 | 38 | 808·7 |
| 22 | 516·4 | 23 | 553·9 | 25 22 | 0 | 20·08 | 2 | 514·7 | 3 | 588·5 | | 40 | 03·23 | 42 | 542·5 | 43 | 792·9 |
| 27 | 514·1 | 28 | 544·2 | | 10 | 18·16 | 12 | 513·6 | 13 | 592·5 | | 45 | 08·14 | 47 | 547·9 | 48 | 780·7 |
| 32 | 514·3 | 33 | 534·5 | | 15 | 17·61 | 17 | 512·1 | 18 | 594·5 | | 50 | 11·71 | 52 | 544·1 | 53 | 775·4 |
| 37 | 514·9 | 38 | 525·0 | | 20 | 20·72 | 22 | 517·9 | 23 | 594·4 | | 55 | 11·10 | 57 | 543·7 | 58 | 780·1 |
| 42 | 514·6 | 43 | 520·2 | | 25 | 21·37 | 27 | 516·6 | 28 | 595·4 | 26 7 | 0 | 01·34 | 2 | 544·2 | 3 | 756·7 |
| 47 | 513·8 | 48 | 517·1 | | 30 | 20·85 | 32 | 518·8 | | | | 5 | 02·35 | 7 | 557·8 | 8 | 711·0 |
| 2 | 517·8 | 3 | 506·6 | | 35 | 20·70 | 37 | 515·8 | | | | 10 | 15·52 | 12 | 543·8 | 13 | 710·1 |
| 7 | 520·9 | 8 | 504·2 | 25 23 | 0 | 22·17 | 2 | 511·5 | 3 | 596·7 | | 15 | 18·45 | 17 | 527·1 | 18 | 714·4 |
| 17 | 520·6 | 18 | 499·9 | 26 0 | 0 | 26·63 | 2 | 510·6 | 3 | 597·1 | | 20 | 15·12 | 22 | 527·8 | 23 | 712·4 |
| 27 | 508·3 | 28 | 492·0 | | 5 | 24·22 | 7 | 517·0 | 8 | 598·4 | | 25 | 13·32 | 27 | 535·0 | 28 | 699·9 |

BIFILAR. $k$=0·000140. BALANCE. $k$=0·0000085.

| Gött. Mean Time. | Declination. | | Bifilar Corrected. | | Balance Corrected. | | Gött. Mean Time. | Declination. | | Bifilar Corrected. | | Balance Corrected. | | Gött. Mean Time. | Declination. | |
|---|---|---|---|---|---|---|---|---|---|---|---|---|---|---|---|---|
| d. h. | Min. | ° ′ | Min. | Sc. Div. | Min. | Mic. Div. | d. h. | Min. | ° ′ | Min. | Sc. Div. | Min. | Mic. Div. | d. h. | Min. | ° ′ |
| 26 7 | 30 | 25 18·07 | 32 | 524·7 | 33 | 689·4 | 26 20 | 0 | 25 31·12 | 2 | 509·8 | 3 | 598·2 | 27 17 | 0 | 25 22·47 |
| | 35 | 19·19 | 37 | 513·7 | 38 | 675·6 | 26 21 | 0 | 21·43 | 2 | 523·4 | 3 | 601·1 | | 10 | 22·44 |
| | 40 | 20·18 | 42 | 512·7 | 43 | 702·4 | | 10 | 20·33 | 12 | 529·9 | 13 | 607·6 | | 20 | 21·90 |
| | 45 | 12·06 | 47 | 517·3 | 48 | 733·4 | 26 22 | 0 | 21·66 | 2 | 510·2 | 3 | 638·8 | | 40 | 16·25 |
| | 50 | 05·18 | 52 | 522·2 | 53 | 728·3 | | 40 | 24·45 | 42 | 499·3 | 43 | 653·8 | | 50 | 15·41 |
| | 55 | 02·37 | 57 | 515·5 | | | | | | 47 | 496·3 | | | 27 18 | 0 | 14·51 |
| 26 8 | 0 | 25 00·20 | 2 | 506·5 | 3 | 719·1 | | 50 | 24·66 | 52 | 494·4 | 53 | 657·6 | | | |
| | 5 | 24 55·20 | | | | | | 55 | 25·38 | 57 | 492·8 | | | 28 6 | 0 | 06·95 |
| | 7 | 54·01 | 7 | 561·9 | 8 | 772·3 | 26 23 | 0 | 26·90 | 2 | 493·1 | 3 | 665·2 | | 10 | 07·37 |
| | | | 9 | 555·0 | | | | 5 | 28·09 | 7 | 489·0 | | | | 16 | 09·94 |
| | 10 | 55·70 | 11 | 534·7 | 11 | 774·8 | | 10 | 29·19 | 12 | 492·2 | 13 | 666·1 | | 20 | 11·82 |
| | | | 12 | 523·7 | 13 | 780·9 | | 15 | 29·36 | 17 | 489·4 | 18 | 659·9 | | 30 | 12·09 |
| | | | 14 | 515·8 | | | | 20 | 30·18 | 22 | 498·6 | | | | 40 | 13·66 |
| | 15 | 38·48 | 15 | 520·2 | | | | 25 | 29·16 | 27 | 502·2 | 28 | 654·1 | | 50 | 15·99 |
| | 16 | 40·49 | 16 | 525·6 | | | | 30 | 27·28 | 32 | 504·2 | 33 | 650·1 | 28 7 | 0 | 17·44 |
| | 17 | 42·66 | | | 17 | 705·8 | | 35 | 27·14 | 37 | 508·4 | | | | | |
| | 18 | 44·76 | 18 | 534·1 | | | | 40 | 25·47 | 42 | 507·3 | | | 29 13 | 0 | 25 11·35 |
| | 19 | 46·65 | | | | | 27 0 | 0 | 25·36 | 2 | 514·1 | 3 | 639·7 | | 10 | 10·61 |
| | 20 | 48·74 | 20 | 537·6 | | | 27 3 | 0 | 20·20 | 2 | 520·4 | 3 | 646·3 | | 20 | 08·92 |
| | 21 | 51·25 | | | 21 | 660·0 | | | | 42 | 539·8 | 43 | 658·4 | | 30 | 07·44 |
| | 22 | 53·31 | 22 | 538·7 | | | | 45 | 16·99 | 47 | 540·7 | 48 | 661·2 | | 40 | 09·22 |
| | 23 | 55·40 | | | 23 | 652·4 | 27 4 | 0 | 19·44 | 2 | 538·7 | 3 | 673·4 | | 50 | 10·74 |
| | 24 | 57·29 | 24 | 536·0 | | | | | | 17 | 520·6 | 18 | 697·3 | 29 14 | 0 | 09·73 |
| | 25 | 58·47 | 27 | 525·9 | 28 | 633·7 | | 20 | 14·73 | 22 | 531·0 | 23 | 699·6 | | 10 | 10·14 |
| | 30 | 57·19 | 32 | 520·7 | 33 | 628·9 | | 30 | 15·05 | 32 | 533·2 | 33 | 709·8 | | 40 | 14·55 |
| | 35 | 57·64 | 37 | 522·0 | 38 | 619·4 | | 40 | 15·85 | 42 | 538·2 | 43 | 716·5 | 29 15 | 0 | 20·70 |
| | 40 | 24 58·82 | 42 | 530·0 | 43 | 618·2 | 27 5 | 0 | 18·18 | 2 | 540·4 | 3 | 711·0 | | 10 | 20·53 |
| | 45 | 25 04·34 | 47 | 534·2 | 48 | 613·7 | 27 6 | 0 | 10·40 | 2 | 546·7 | 3 | 719·2 | | 30 | 18·99 |
| | 50 | 11·64 | 52 | 513·1 | 53 | 619·5 | | 10 | 13·36 | 12 | 549·6 | 13 | 706·9 | 29 16 | 0 | 16·99 |
| | 55 | 07·65 | 57 | 509·6 | 58 | 622·5 | | 15 | 14·84 | 17 | 546·2 | 18 | 702·3 | 29 17 | 0 | 19·93 |
| 26 9 | 0 | 02·48 | 2 | 521·5 | 3 | 618·5 | | 20 | 15·45 | 22 | 544·9 | 23 | 696·6 | | 10 | 21·37 |
| | 5 | 05·33 | 7 | 528·4 | 8 | 614·3 | | 55 | 12·18 | 57 | 529·8 | | | | 20 | 21·64 |
| | 10 | 08·99 | 12 | 523·6 | | | 27 7 | 0 | 10·13 | 2 | 528·3 | 3 | 685·9 | | 30 | 23·49 |
| | 15 | 10·40 | 17 | 519·6 | 18 | 614·0 | | 10 | 09·13 | 12 | 532·3 | 13 | 685·1 | | 35 | 24·15 |
| | 20 | 10·36 | 22 | 514·0 | | | | 20 | 08·28 | 22 | 537·5 | 23 | 681·0 | | 40 | 24·26 |
| | 25 | 08·56 | 27 | 519·8 | | | | 30 | 10·48 | 32 | 538·4 | 33 | 675·5 | | 45 | 23·58 |
| | 30 | 08·73 | 32 | 523·3 | 33 | 610·9 | | 40 | 13·32 | 42 | 534·7 | 43 | 673·1 | | 50 | 24·37 |
| | 35 | 12·76 | 37 | 517·9 | 38 | 614·5 | | 50 | 14·60 | 52 | 530·0 | | | | 55 | 25·02 |
| | 40 | 12·04 | | | | | 27 8 | 0 | 13·34 | 2 | 529·8 | 3 | 667·0 | 29 18 | 0 | 25·83 |
| | 45 | 09·20 | 47 | 517·3 | 48 | 613·5 | 27 12 | 0 | 20·15 | 2 | 528·6 | 3 | 603·8 | | 5 | 26·77 |
| 26 10 | 0 | 11·39 | 2 | 521·3 | 3 | 604·3 | | 15 | 18·77 | 17 | 529·5 | 18 | 592·0 | | 10 | 25·81 |
| 26 11 | 0 | 11·82 | 2 | 522·7 | 3 | 591·1 | | 30 | 20·79 | 32 | 531·8 | 33 | 581·9 | | 15 | 25·51 |
| | 10 | 10·43 | 12 | 522·7 | 13 | 583·1 | | 40 | 21·46 | 42 | 529·1 | 43 | 577·2 | | 20 | 25·73 |
| | 20 | 09·79 | 22 | 515·8 | 23 | 577·2 | | 50 | 19·79 | 52 | 529·5 | 53 | 572·6 | | 25 | 26·28 |
| | 30 | 12·31 | 32 | 522·3 | 33 | 566·3 | 27 13 | 0 | 17·40 | 2 | 530·9 | 3 | 568·5 | | 30 | 27·04 |
| | 35 | 15·41 | 37 | 522·2 | 38 | 555·8 | | 20 | 13·52 | | | | | | 35 | 27·21 |
| | 40 | 16·84 | 42 | 526·1 | 43 | 550·3 | | 41 | 16·25 | 42 | 530·4 | 43 | 578·1 | | 40 | 26·28 |
| | 45 | 16·84 | 47 | 528·6 | 48 | 549·7 | | 52 | 17·98 | | | | | | 45 | 25·17 |
| | 55 | 17·80 | 57 | 527·1 | 58 | 557·1 | 27 14 | 0 | 20·38 | 2 | 529·8 | 3 | 579·8 | | 50 | 26·43 |
| 26 12 | 0 | 17·70 | 2 | 524·2 | 3 | 561·0 | | 10 | 23·02 | 12 | 531·4 | 13 | 572·8 | | 55 | 25·60 |
| | 10 | 16·26 | 12 | 525·5 | 13 | 568·3 | | 15 | 23·39 | | | | | 29 19 | 0 | 23·86 |
| | 30 | 15·54 | 32 | 535·2 | 33 | 582·3 | | 20 | 22·94 | 22 | 534·3 | 23 | 560·2 | | 10 | 23·27 |
| | 35 | 18·11 | 37 | 533·3 | 38 | 585·7 | | 25 | 22·47 | 27 | 536·4 | 28 | 552·1 | | 20 | 21·54 |
| | 40 | 19·39 | 42 | 531·6 | 43 | 585·7 | | 35 | 21·41 | 37 | 533·1 | 38 | 547·6 | | 30 | 19·88 |
| | 50 | 19·73 | 52 | 529·7 | 53 | 586·2 | | 45 | 19·93 | 47 | 531·1 | | | | 40 | 19·66 |
| 26 13 | 0 | 18·43 | 2 | 528·8 | 3 | 589·7 | 27 15 | 0 | 17·74 | 2 | 530·6 | 3 | 537·6 | | 50 | 18·50 |
| | 15 | 16·18 | 17 | 530·2 | 18 | 596·9 | 27 16 | 0 | 16·89 | 2 | 530·1 | 3 | 532·6 | 29 20 | 0 | 19·64 |
| 26 14 | 0 | 18·41 | 2 | 526·2 | 3 | 617·0 | | 15 | 19·19 | | | | | | 10 | 22·51 |
| 26 19 | 0 | 27·53 | 2 | 519·1 | 3 | 586·4 | | 30 | 21·21 | 32 | 516·6 | 33 | 536·6 | | 20 | 22·33 |
| | 20 | 28·79 | 22 | 508·4 | 23 | 590·1 | | 40 | 21·68 | 42 | 515·1 | 43 | 537·1 | | 30 | 22·20 |
| | 30 | 28·74 | 32 | 508·4 | | | | 50 | 21·83 | 52 | 518·5 | 53 | 536·6 | 29 21 | 0 | 18·43 |

BIFILAR. $k=0{\cdot}000140$. BALANCE. $k=0{\cdot}0000085$.

Sept. 27d 15h—16h. The declination was watched between 15h and 16h, and was always found to be about 25° 16′·5.

| Bifilar Corrected. | | Balance Corrected. | | Gött. Mean Time. | | Declination. | | Bifilar Corrected. | | Balance Corrected. | | Gött. Mean Time. | | Declination. | | Bifilar Corrected. | | Balance Corrected. | |
|---|---|---|---|---|---|---|---|---|---|---|---|---|---|---|---|---|---|---|---|
| Min. | Sc. Div. | Min. | Mic. Div. | d. | h. | Min. | ° ′ | Min. | Sc. Div. | Min. | Mic. Div. | d. | h. | Min. | ° ′ | Min. | Sc. Div. | Min. | Mic. Div |
| 2 | 517·0 | 3 | 532·1 | 30 | 2 | 0 | 25 20·82 | 2 | 533·7 | 3 | 692·5 | 30 | 15 | 25 | 25 07·34 | 27 | 547·8 | | |
| 11 | 519·1 | 12 | 527·8 | | | | | 12 | 536·7 | 13 | 694·8 | | | 30 | 09·40 | 32 | 544·7 | 33 | 432·8 |
| 21 | 523·2 | 22 | 528·2 | | | | | 22 | 537·2 | 23 | 692·6 | | | 35 | 11·44 | 37 | 541·9 | 38 | 429·7 |
| 41 | 527·9 | 42 | 538·1 | | | 30 | 23·83 | 32 | 543·9 | 33 | 689·6 | | | 40 | 13·74 | 42 | 538·9 | 43 | 424·4 |
| | | | | | | 40 | 25·60 | 42 | 544·8 | 43 | 688·2 | | | 45 | 14·77 | 47 | 537·9 | 48 | 417·3 |
| 2 | 534·3 | 3 | 561·2 | 30 | 3 | 0 | 29·37 | 2 | 545·1 | 3 | 702·8 | | | 50 | 16·45 | 52 | 539·1 | 53 | 413·7 |
| | | | | | | 10 | 26·67 | 12 | 546·8 | 13 | 738·8 | | | 55 | 16·62 | 57 | 537·1 | 58 | 404·4 |
| 2 | 532·7 | 3 | 688·7 | | | | | 17 | 560·8 | 18 | 746·7 | 30 | 16 | 0 | 15·85 | 2 | 541·2 | 3 | 398·5 |
| 12 | 537·6 | 13 | 686·2 | | | 20 | 17·83 | 22 | 560·4 | 23 | 743·2 | | | 10 | 18·34 | 12 | 548·9 | 13 | 392·1 |
| 17 | 534·8 | 18 | 686·0 | | | 25 | 16·35 | 27 | 552·9 | | | | | 15 | 21·43 | 17 | 545·5 | 18 | 388·1 |
| 22 | 532·8 | 23 | 687·7 | | | | | 32 | 554·9 | 33 | 749·3 | | | 20 | 24·30 | 22 | 538·0 | 23 | 379·4 |
| 32 | 523·1 | 33 | 685·2 | | | 35 | 16·06 | 37 | 558·5 | | | | | 25 | 26·23 | 27 | 536·4 | 28 | 370·2 |
| 42 | 530·3 | 43 | 680·9 | | | 45 | 16·32 | 47 | 556·7 | 48 | 742·8 | | | 30 | 28·35 | 32 | 537·6 | 33 | 357·4 |
| 52 | 531·4 | 53 | 673·7 | 30 | 4 | 0 | 20·40 | 2 | 548·6 | 3 | 734·3 | | | 35 | 29·53 | 37 | 536·5 | 38 | 339·6 |
| 2 | 531·2 | 3 | 668·6 | | | 20 | 22·92 | 22 | 547·1 | 23 | 736·1 | | | 40 | 28·49 | 42 | 545·2 | 43 | 322·2 |
| | | | | | | 48 | 06·70 | | | | | | | 45 | 24·89 | 47 | 547·2 | 48 | 317·2 |
| 2 | 511·6 | 3 | 407·1 | | | 50 | 01·78 | 52 | 561·3 | 53 | 787·8 | | | 50 | 23·31 | 52 | 545·7 | | |
| 12 | 513·2 | 13 | 421·2 | | | 55 | 04·91 | 57 | 563·9 | | | | | 55 | 23·29 | 57 | 541·4 | 58 | 323·4 |
| 22 | 519·4 | 23 | 446·5 | 30 | 5 | 0 | 11·28 | 2 | 552·2 | 3 | 757·6 | 30 | 17 | 0 | 23·85 | 2 | 538·7 | 3 | 325·2 |
| 32 | 519·0 | 33 | 477·0 | | | | | 7 | 554·2 | 8 | 752·3 | | | 10 | 26·79 | 12 | 538·1 | 13 | 324·6 |
| 42 | 523·5 | 43 | 510·2 | | | 10 | 09·82 | 12 | 556·1 | 13 | 749·9 | | | 15 | 28·90 | 17 | 528·1 | | |
| 52 | 525·3 | 53 | 527·9 | | | 15 | 15·89 | 17 | 546·9 | 18 | 748·2 | | | 20 | 30·81 | 22 | 524·1 | 23 | 318·8 |
| 2 | 524·0 | 3 | 531·9 | | | 20 | 18·94 | 22 | 537·0 | 23 | 747·4 | | | 25 | 32·94 | 27 | 524·6 | 28 | 315·2 |
| 12 | 522·0 | 13 | 535·8 | | | 25 | 18·95 | 27 | 533·1 | | | | | 30 | 34·03 | 32 | 529·9 | | |
| 42 | 514·7 | 43 | 529·7 | | | 30 | 18·84 | 32 | 530·4 | 33 | 751·7 | | | 35 | 38·62 | 37 | 526·0 | | |
| 2 | 523·3 | 3 | 554·5 | | | 35 | 16·62 | 37 | 536·0 | 38 | 750·5 | | | 40 | 42·76 | 42 | 521·4 | 43 | 313·2 |
| 12 | 522·9 | 13 | 560·3 | | | 40 | 18·08 | 42 | 533·3 | | | | | 45 | 46·31 | 47 | 521·7 | 48 | 304·0 |
| 32 | 525·7 | 33 | 569·0 | | | 45 | 18·57 | 47 | 532·3 | 48 | 752·1 | | | 50 | 45·04 | 52 | 518·0 | 53 | 292·8 |
| 2 | 526·1 | 3 | 565·9 | 30 | 6 | 0 | 18·97 | 2 | 534·6 | 3 | 742·1 | | | 55 | 43·58 | 57 | 514·3 | | |
| 2 | 529·4 | 3 | 557·2 | 30 | 9 | 0 | 13·72 | 2 | 539·4 | 3 | 650·3 | 30 | 18 | 0 | 43·82 | 2 | 508·5 | 3 | 291·8 |
| 12 | 531·2 | 13 | 557·8 | | | 15 | 10·04 | 17 | 538·0 | 18 | 644·1 | | | 5 | 42·44 | 7 | 498·6 | 8 | 294·7 |
| | | | | | | 25 | 13·30 | 27 | 533·7 | 28 | 644·4 | | | 10 | 41·67 | 12 | 483·6 | 13 | 302·7 |
| 31 | 524·9 | 32 | 559·4 | | | 40 | 16·95 | 42 | 531·2 | 43 | 640·2 | | | 15 | 44·06 | 17 | 467·9 | 18 | 299·8 |
| 37 | 522·7 | 38 | 558·2 | 30 | 10 | 0 | 18·07 | 2 | 529·2 | 3 | 634·2 | | | 20 | 48·00 | 22 | 468·7 | 23 | 288·8 |
| 42 | 520·1 | 43 | 558·7 | 30 | 13 | 0 | 18·90 | 2 | 525·0 | 3 | 599·6 | | | 25 | 46·24 | 27 | 480·9 | 28 | 295·8 |
| 47 | 519·7 | 48 | 559·5 | | | 5 | 23·01 | 7 | 519·7 | 8 | 592·2 | | | 30 | 44·59 | 32 | 490·5 | 33 | 302·5 |
| 52 | 516·9 | 53 | 561·4 | | | 10 | 25·68 | 12 | 512·7 | 13 | 576·0 | | | 35 | 42·48 | 37 | 491·8 | 38 | 308·8 |
| | | | | | | 15 | 28·45 | 17 | 509·0 | 18 | 548·9 | | | 40 | 38·79 | 42 | 495·2 | 43 | 323·3 |
| 2 | 513·6 | 3 | 563·2 | | | 20 | 28·13 | 22 | 505·1 | 23 | 525·9 | | | 45 | 37·30 | 47 | 494·4 | 48 | 334·7 |
| 7 | 511·6 | 8 | 564·6 | | | 25 | 29·63 | 27 | 504·5 | 28 | 503·1 | | | 50 | 35·11 | 52 | 492·6 | 53 | 349·6 |
| 12 | 510·3 | | | | | 30 | 30·44 | 32 | 518·1 | 33 | 476·4 | | | 55 | 34·22 | 57 | 495·9 | 58 | 359·5 |
| 17 | 513·5 | 18 | 566·6 | | | 35 | 26·47 | 37 | 519·9 | 38 | 452·5 | 30 | 19 | 0 | 33·38 | 2 | 497·4 | 3 | 377·4 |
| | | | | | | 40 | 25·27 | 42 | 512·4 | 43 | 426·6 | | | 5 | 35·46 | 7 | 495·6 | 8 | 385·4 |
| 27 | 519·3 | 28 | 570·9 | | | 45 | 21·04 | 47 | 514·3 | 48 | 410·1 | | | 10 | 35·06 | 12 | 491·6 | 13 | 396·3 |
| 32 | 521·9 | 33 | 570·4 | | | 50 | 16·65 | 52 | 516·2 | 53 | 400·6 | | | 15 | 31·68 | 17 | 498·3 | 18 | 404·5 |
| | | | | | | 55 | 13·22 | 57 | 518·0 | 58 | 397·6 | | | 20 | 29·26 | 22 | 500·6 | 23 | 412·4 |
| | | | | 30 | 14 | 0 | 10·33 | 2 | 518·8 | 3 | 396·4 | | | 25 | 28·15 | 27 | 505·0 | 28 | 423·6 |
| 47 | 529·5 | 48 | 568·9 | | | 5 | 09·05 | 7 | 514·5 | 8 | 394·9 | | | 30 | 27·88 | 32 | 497·7 | 33 | 433·6 |
| 52 | 526·6 | 53 | 568·5 | | | 10 | 07·54 | 12 | 515·9 | 43 | 402·2 | | | 35 | 28·32 | 37 | 493·9 | 38 | 443·2 |
| 57 | 524·8 | 58 | 566·4 | | | 15 | 06·14 | 17 | 520·3 | 18 | 411·2 | | | 40 | 28·11 | 42 | 493·8 | 43 | 453·7 |
| 2 | 528·1 | 3 | 565·3 | | | 20 | 07·15 | 22 | 516·4 | 23 | 415·0 | | | 45 | 29·10 | 47 | 492·6 | 48 | 461·8 |
| 12 | 519·0 | 13 | 570·4 | | | 25 | 07·45 | 27 | 516·6 | 28 | 420·9 | | | 50 | 29·53 | 52 | 495·9 | 53 | 469·4 |
| 22 | 511·0 | 23 | 577·7 | | | 30 | 08·21 | 32 | 523·1 | 33 | 425·0 | | | 55 | 30·57 | 57 | 494·2 | 58 | 479·2 |
| 32 | 518·9 | 33 | 582·2 | | | 35 | 11·34 | 37 | 514·2 | 38 | 420·9 | 30 | 20 | 0 | 31·72 | 2 | 495·7 | 3 | 486·3 |
| 42 | 519·4 | 43 | 591·1 | | | 40 | 12·33 | 42 | 513·5 | 43 | 434·2 | | | 5 | 31·95 | 7 | 494·8 | 8 | 492·4 |
| 52 | 526·2 | 53 | 596·6 | | | 55 | 10·09 | 57 | 520·8 | | | | | 10 | 32·91 | 12 | 488·6 | 13 | 499·0 |
| 2 | 527·0 | 3 | 602·6 | 30 | 15 | 0 | 07·11 | 2 | 537·1 | 3 | 429·3 | | | 15 | 31·06 | 17 | 489·0 | 18 | 504·7 |
| 12 | 525·6 | 13 | 606·2 | | | 5 | 05·90 | 7 | 543·3 | 8 | 429·4 | | | 20 | 29·03 | 22 | 490·8 | 23 | 509·7 |
| 22 | 521·0 | 23 | 607·5 | | | 10 | 06·56 | 12 | 546·6 | 13 | 431·0 | | | 25 | 28·62 | 27 | 491·1 | 28 | 517·4 |
| 32 | 519·9 | 33 | 611·4 | | | 15 | 06·86 | 17 | 545·6 | 18 | 433·3 | | | 30 | 27·62 | 32 | 495·3 | 33 | 520·8 |
| 2 | 522·2 | 3 | 614·5 | | | 20 | 06·79 | 22 | 544·6 | 23 | 433·7 | | | 36 | 27·82 | 37 | 492·9 | 38 | 523·0 |

BIFILAR. $k=0{\cdot}000140$. BALANCE. $k=0{\cdot}0000085$.

| Gött. Mean Time. | | Declination. | | Bifilar Corrected. | | Balance Corrected. | | Gött. Mean Time. | | Declination. | | Bifilar Corrected. | | Balance Corrected. | | Gött. Mean Time. | | Declination. | |
|---|---|---|---|---|---|---|---|---|---|---|---|---|---|---|---|---|---|---|---|
| d. | h. | Min. | ° ′ | Min. | Sc. Div. | Min. | Mic. Div. | d. | h. | Min. | ° ′ | Min. | Sc. Div. | Min. | Mic. Div. | d. | h. | Min. | ° ′ |
| 30 | 20 | 40 | 25 27·17 | 42 | 488·8 | 43 | 531·4 | 1 | 2 | 10 | 25 20·87 | 12 | 542·4 | 13 | 786·1 | 1 | 5 | 30 | 25 05·76 |
| | | 45 | 23·75 | 47 | 494·1 | 48 | 536·1 | | | 15 | 21·79 | 17 | 538·7 | 18 | 778·1 | | | 34 | 07·84 |
| | | 50 | 23·07 | | | | | | | 25 | 22·37 | 27 | 538·8 | 28 | 759·5 | | | 35 | 07·74 |
| 30 | 21 | 0 | 24·66 | 2 | 484·7 | 3 | 559·1 | | | 40 | 23·59 | 42 | 533·3 | 43 | 748·4 | | | 38 | 12·42 |
| | | 5 | 22·75 | 7 | 477·3 | 8 | 566·9 | 1 | 3 | 0 | 24·22 | 2 | 538·8 | 3 | 748·0 | | | 40 | 12·31 |
| | | 10 | 21·51 | 12 | 474·6 | 13 | 570·4 | | | 20 | 26·18 | 22 | 547·5 | 23 | 764·9 | | | | |
| | | 15 | 21·66 | 17 | 483·1 | 18 | 574·7 | | | 25 | 26·61 | 27 | 545·2 | 28 | 777·1 | | | 45 | 18·68 |
| | | 20 | 22·42 | 22 | 480·3 | 23 | 582·4 | | | 30 | 25·90 | 32 | 546·9 | 33 | 791·2 | | | | |
| | | 25 | 18·38 | 27 | 494·9 | 28 | 582·7 | | | 35 | 23·41 | 37 | 555·1 | 38 | 799·0 | | | 50 | 19·71 |
| | | 30 | 24·89 | 32 | 491·5 | 33 | 587·8 | | | 41 | 23·29 | 42 | 560·9 | 43 | 806·7 | | | | |
| | | 35 | 26·03 | 37 | 496·0 | 38 | 592·6 | | | 45 | 24·20 | 47 | 564·0 | 48 | 827·9 | | | | |
| | | 40 | 27·51 | 42 | 496·0 | 43 | 597·4 | | | 50 | 23·04 | 52 | 561·9 | 53 | 840·4 | | | 55 | 22·55 |
| | | 45 | 27·59 | 47 | 493·9 | 48 | 603·4 | | | 55 | 21·19 | 57 | 566·5 | 58 | 888·1 | | | 56 | 19·56 |
| | | 50 | 24·12 | 52 | 501·2 | 53 | 604·9 | | | | | 59 | 582·9 | | | 1 | 6 | 0 | 15·72 |
| | | 55 | 26·28 | 57 | 502·4 | 58 | 607·4 | 1 | 4 | 0 | 14·23 | | | | | | | | |
| 30 | 22 | 0 | 25·44 | 2 | 497·0 | 3 | 615·1 | | | 1 | 13·84 | 2 | 574·5 | 3 | 880·3 | | | 5 | 18·07 |
| | | 5 | 24·82 | 7 | 497·5 | 8 | 625·2 | | | | | 4 | 584·0 | | | | | 10 | 18·85 |
| | | 10 | 24·03 | 12 | 497·5 | 13 | 636·5 | | | 5 | 13·83 | 6 | 569·4 | | | | | 15 | 16·30 |
| | | 15 | 23·12 | 17 | 498·3 | 18 | 647·4 | | | | | 7 | 566·7 | 8 | 877·4 | | | 20 | 10·50 |
| | | 20 | 22·55 | 22 | 494·8 | 23 | 652·8 | | | | | 9 | 573·9 | | | | | 25 | 03·02 |
| | | 25 | 21·77 | 27 | 498·6 | 28 | 653·2 | | | 10 | 15·24 | 11 | 578·9 | | | | | 30 | 25 03·27 |
| | | 30 | 19·24 | 32 | 499·9 | 33 | 652·0 | | | | | 12 | 576·7 | 13 | 888·5 | | | 35 | 24 27·39 |
| | | 35 | 19·58 | 37 | 495·0 | 38 | 654·8 | | | | | 14 | 573·4 | | | | | 40 | 24 41·55 |
| | | 40 | 18·63 | 42 | 496·8 | 43 | 656·1 | | | 15 | 12·11 | | | | | | | 45 | 25 00·65 |
| | | 45 | 17·65 | 47 | 500·1 | 48 | 665·8 | | | 16 | 10·65 | 17 | 576·7 | 18 | 888·3 | | | 50 | 13·20 |
| | | 50 | 19·73 | 52 | 501·2 | 53 | 663·1 | | | 20 | 03·55 | 19 | 556·4 | | | | | 54 | 06·97 |
| | | 55 | 23·54 | 57 | 490·6 | 58 | 664·0 | | | 21 | 25 01·12 | 22 | 543·2 | 23 | 883·8 | | | 55 | 03·50 |
| 30 | 23 | 0 | 24·15 | 2 | 483·6 | 3 | 668·5 | | | | | 24 | 563·6 | | | | | 56 | 03·63 |
| | | 5 | 20·80 | 7 | 490·2 | 8 | 671·3 | | | 25 | 24 52·15 | | | | | | | 57 | 07·42 |
| | | 10 | 19·37 | 12 | 501·1 | 13 | 671·2 | | | 26 | 46·97 | 27 | 585·1 | 28 | 898·0 | | | | |
| | | 15 | 20·35 | 17 | 497·7 | 18 | 675·0 | | | 28 | 42·50 | 29 | 596·0 | | | | | 59 | 18·40 |
| | | 20 | 19·81 | 22 | 499·4 | 23 | 678·6 | | | 30 | 44·76 | 32 | 608·0 | 33 | 864·0 | 1 | 7 | 0 | 23·88 |
| | | 31 | 20·08 | 32 | 507·4 | 33 | 690·2 | | | 31 | 48·51 | 34 | 592·7 | | | | | 1 | 23·31 |
| 1 | 0 | 0 | 21·26 | 2 | 511·9 | 3 | 679·5 | | | 35 | 49·54 | 37 | 594·4 | 38 | 829·7 | | | 2 | 16·18 |
| | | | | 12 | 518·9 | 13 | 673·4 | | | 36 | 47·30 | 39 | 597·8 | | | | | 4 | 05·99 |
| | | 15 | 22·87 | 17 | 518·8 | 18 | 677·3 | | | 40 | 55·02 | 42 | 579·7 | 41 | 819·1 | | | 5 | 03·28 |
| | | 25 | 24·59 | 27 | 530·0 | 28 | 696·3 | | | 43 | 49·22 | 44 | 591·2 | | | | | 6 | 02·62 |
| | | 30 | 21·24 | 32 | 519·4 | 33 | 728·4 | | | 45 | 51·09 | 46 | 601·2 | 46 | 803·7 | | | 7 | 03·45 |
| | | 35 | 20·92 | 37 | 522·6 | 38 | 755·0 | | | | | 47 | 595·1 | | | | | 9 | 09·06 |
| | | 40 | 23·81 | 42 | 527·9 | 43 | 784·9 | | | 48 | 24 57·51 | 49 | 585·7 | | | | | 10 | 13·16 |
| | | 45 | 21·46 | 47 | 545·0 | 48 | 797·9 | | | 50 | 25 00·69 | 51 | 567·2 | 51 | 816·0 | | | 12 | 26·47 |
| | | 50 | 22·85 | 52 | 566·8 | 53 | 810·3 | | | 53 | 25 01·68 | 52 | 556·2 | 53 | 823·5 | | | 13 | 33·41 |
| | | 55 | 29·29 | 55 | 575·1 | | | | | | | 54 | 545·8 | | | | | 14 | 35·82 |
| | | | | 57 | 562·9 | 57 | 833·1 | | | 55 | 24 58·06 | 56 | 562·0 | | | | | 15 | 34·79 |
| | | 59 | 31·75 | 59 | 556·2 | 58 | 852·4 | | | | | 57 | 565·6 | 58 | 821·9 | | | | |
| 1 | 1 | 0 | 29·90 | | | 1 | 888·6 | | | | | 59 | 569·8 | | | | | 17 | 29·68 |
| | | | | 2 | 544·0 | 3 | 893·5 | 1 | 5 | 0 | 25 05·50 | 2 | 564·5 | 3 | 815·6 | | | | |
| | | 5 | 20·27 | | | | | | | 5 | 20·18 | 7 | 534·0 | 8 | 876·6 | | | 19 | 19·21 |
| | | 6 | 19·26 | 7 | 540·4 | 8 | 878·6 | | | | | 9 | 543·2 | | | | | 20 | 14·77 |
| | | | | 9 | 536·0 | | | | | 10 | 00·24 | | | | | | | | |
| | | 10 | 17·67 | 12 | 535·2 | 13 | 847·9 | | | 11 | 05·80 | 12 | 565·0 | 13 | 818·6 | | | 22 | 08·36 |
| | | 15 | 17·15 | 17 | 539·0 | 18 | 824·7 | | | | | 14 | 558·3 | | | | | 23 | 07·00 |
| | | 20 | 19·53 | 22 | 543·2 | 23 | 806·6 | | | 15 | 16·70 | | | | | | | 24 | 07·08 |
| | | 25 | 21·59 | 27 | 527·7 | 28 | 798·8 | | | 16 | 20·05 | 17 | 553·8 | 18 | 852·4 | | | 25 | 07·15 |
| | | 30 | 21·03 | 32 | 527·4 | 33 | 793·9 | | | 18 | 24·22 | 19 | 546·5 | | | | | 27 | 10·14 |
| | | 35 | 22·13 | 37 | 531·2 | 38 | 792·9 | | | 20 | 18·16 | | | | | | | | |
| | | 45 | 22·53 | 47 | 545·5 | 48 | 792·7 | | | 21 | 25 11·49 | 22 | 547·6 | 23 | 928·3 | | | 29 | 13·50 |
| | | 50 | 22·53 | 52 | 541·1 | 53 | 792·8 | | | 23 | 24 57·30 | | | | | | | 30 | 13·32 |
| | | 55 | 25·56 | 57 | 533·3 | 58 | 799·9 | | | 24 | 24 58·32 | | | | | | | | |
| 1 | 2 | 0 | 24·20 | 2 | 525·6 | 3 | 794·1 | | | 25 | 25 02·15 | 26 | 562·5 | 27 | 873·3 | | | 32 | 13·52 |
| | | 5 | 20·08 | 7 | 539·6 | 8 | 789·4 | | | 29 | 07·34 | 28 | 556·6 | | | | | | |

BIFILAR. $k$=0·000140. BALANCE. $k$=0·0000085.

Oct. 1$^d$ 6$^h$ 35$^m$. The declination magnet vibrating about 7′, the declination changing very rapidly; bifilar magnet vibrating about 11 divisions.

| Bifilar Corrected. | | Balance Corrected. | | Gött. Mean Time. | Declination. | | Bifilar Corrected. | | Balance Corrected. | | Gött. Mean Time. | Declination. | | Bifilar Corrected. | | Balance Corrected. | |
|---|---|---|---|---|---|---|---|---|---|---|---|---|---|---|---|---|---|
| Min. | Sc. Div. | Min. | Mic. Div. | d. h. | Min. | ° ′ | Min. | Sc. Div. | Min. | Mic. Div. | d. h. | Min. | ° ′ | Min. | Sc. Div. | Min. | Mic. Div. |
| 31 | 559·0 | 32 | 888·5 | 1 7 | 35 | 25 10·48 | 37 | 521·3 | 38 | 695·2 | 2 6 | 41 | 25 02·01 | 41 | 542·1 | | |
| 33 | 558·8 | | | | 40 | 16·59 | 42 | 513·3 | 43 | 712·3 | | 42 | 25 00·10 | 42½ | 541·9 | | |
| 37 | 558·5 | 36 | 889·6 | | 45 | 13·36 | 47 | 524·1 | 48 | 736·8 | | 43 | 24 58·05 | | | 43 | 799·0 |
| 39 | 559·7 | 39 | 882·9 | | 50 | 09·32 | 52 | 523·2 | 53 | 738·7 | | 44 | 57·21 | 44 | 545·7 | | |
| 42 | 573·8 | 43 | 896·7 | | 55 | 11·34 | 57 | 524·4 | 58 | 764·7 | | 45 | 56·35 | 45 | 553·3 | | |
| 44 | 571·7 | | | 1 8 | 0 | 09·12 | 2 | 506·3 | 3 | 760·8 | | 46 | 56·57 | 46 | 557·9 | | |
| 47 | 559·4 | 48 | 898·8 | | 5 | 25 02·64 | 5 | 493·2 | | | | 47 | 56·34 | 47 | 560·6 | | |
| 49 | 553·7 | | | | | | 7 | 491·0 | 8 | 736·9 | | | | 48 | 564·8 | 48 | 832·8 |
| 51 | 568·9 | | | | 10 | 24 58·40 | 12 | 496·9 | 13 | 713·7 | | 49 | 57·02 | 49 | 567·7 | | |
| 52 | 570·7 | 53 | 918·2 | | 15 | 24 58·76 | 17 | 500·6 | 18 | 699·9 | | 50 | 57·44 | 50 | 563·2 | | |
| 54 | 555·6 | | | | 20 | 25 01·79 | 22 | 499·3 | 23 | 694·2 | | | | 51 | 553·7 | 51 | 834·2 |
| 57 | 546·8 | 58 | 914·2 | | 25 | 25 01·34 | 27 | 498·2 | 28 | 689·5 | | 52 | 57·31 | 52 | 544·6 | | |
| 59 | 546·4 | | | | 30 | 24 59·70 | 32 | 497·7 | 33 | 684·9 | | | | 53 | 539·2 | 53 | 823·8 |
| 2 | 545·9 | 3 | 899·6 | | 35 | 25 00·04 | 37 | 500·7 | 38 | 683·6 | | 54 | 56·67 | 54 | 538·0 | | |
| 4 | 541·5 | | | | 41 | 01·88 | 42 | 501·0 | 43 | 684·4 | | 55 | 57·12 | 55 | 535·2 | | |
| 7 | 541·3 | 8 | 893·7 | | 45 | 01·39 | 47 | 498·0 | 48 | 676·6 | | | | 56 | 532·0 | 56 | 807·0 |
| 12 | 544·4 | 13 | 900·0 | 1 9 | 0 | 02·87 | 2 | 499·7 | 3 | 636·8 | | 57 | 24 58·74 | 57 | 528·9 | | |
| 17 | 553·4 | 18 | 922·3 | | 15 | 00·67 | 17 | 496·3 | 18 | 598·8 | | | | 58 | 527·5 | 58 | 797·6 |
| 22 | 541·8 | 23 | 909·9 | | 30 | 05·79 | 32 | 498·1 | 33 | 560·9 | | | | 59 | 529·6 | | |
| 27 | 532·9 | 28 | 837·4 | | 35 | 03·72 | 37 | 501·7 | 38 | 562·0 | 2 7 | 0 | 25 01·83 | 0 | 530·6 | | |
| 32 | 548·3 | 33 | 891·1 | | 40 | 25 00·62 | 42 | 510·9 | 43 | 567·6 | | | | 1 | 529·1 | | |
| 37 | 586·2 | 38 | 778·0 | | 45 | 24 59·53 | 47 | 520·8 | 48 | 554·5 | | | | 2 | 526·7 | 3 | 773·3 |
| 42 | 588·9 | 43 | 699·5 | | 50 | 25 03·45 | 52 | 504·7 | 53 | 510·3 | | 5 | 04·48 | 7 | 528·0 | 8 | 754·4 |
| 47 | 585·4 | 48 | 665·1 | | 55 | 11·81 | 57 | 498·6 | 58 | 473·8 | | 10 | 07·25 | 12 | 521·4 | 13 | 750·1 |
| 52 | 548·5 | 53 | 667·9 | 1 10 | 0 | 15·11 | 2 | 496·3 | 3 | 460·7 | | 15 | 08·21 | 17 | 522·4 | 18 | 747·9 |
| 54 | 540·0 | | | | 5 | 16·36 | 7 | 484·2 | 8 | 418·9 | | 20 | 10·03 | 22 | 522·3 | 23 | 749·1 |
| 55 | 544·9 | | | | 10 | 17·87 | 12 | 473·8 | 13 | 398·6 | | 25 | 11·61 | 27 | 515·0 | 28 | 763·8 |
| 56 | 553·6 | | | | 15 | 25 16·01 | 17 | 441·1 | 18 | 390·4 | | 30 | 14·87 | 32 | 519·3 | 33 | 758·3 |
| 57 | 558·7 | | | | | | 19 | 454·4 | | | | 35 | 16·55 | 37 | 522·7 | 38 | 752·3 |
| 58 | 556·9 | 58 | 635·1 | | 20 | 24 59·86 | 21 | 468·2 | | | | 40 | 15·01 | 42 | 536·2 | 43 | 750·0 |
| 59 | 550·0 | | | | 24 | 24 57·42 | 22 | 478·1 | 23 | 391·5 | | 45 | 12·20 | 47 | 526·2 | 48 | 747·1 |
| 0 | 535·5 | | | | 25 | 24 58·20 | 27 | 475·1 | 28 | 367·7 | | 50 | 20·11 | 52 | 517·3 | 53 | 743·7 |
| 1 | 516·5 | | | | 30 | 25 05·15 | 32 | 491·1 | 33 | 360·4 | | 55 | 18·11 | 57 | 520·0 | 58 | 734·5 |
| 2 | 507·2 | | | | 31 | 06·53 | 34 | 490·8 | | | 2 8 | 0 | 17·29 | 2 | 523·0 | 3 | 725·5 |
| 3 | 507·9 | 3 | 648·3 | | 35 | 08·95 | | | | | * | 15 | 17·67 | 17 | 528·8 | 18 | 701·9 |
| 5 | 517·7 | | | | 36 | 09·20 | 37 | 483·3 | 38 | 390·4 | | 25 | 17·13 | 27 | 531·7 | 28 | 690·9 |
| 7 | 534·5 | | | | | | 39 | 484·4 | | | | 40 | 18·21 | 42 | 534·7 | 43 | 678·3 |
| 8 | 543·2 | 8 | 611·9 | | 40 | 05·82 | | | | | | 50 | 18·00 | 52 | 538·7 | 53 | 673·0 |
| 9 | 548·9 | | | | 41 | 04·84 | 42 | 487·9 | 43 | 421·2 | 2 9 | 0 | 17·12 | 2 | 529·3 | 3 | 677·4 |
| 11 | 551·6 | 11 | 586·4 | | | | 44 | 491·8 | | | | 30 | 16·80 | 32 | 534·7 | 33 | 668·6 |
| 12 | 535·5 | | | | 45 | 02·25 | 47 | 498·7 | 48 | 439·7 | 2 10 | 0 | 15·44 | 2 | 536·2 | 3 | 655·3 |
| | | 13 | 582·3 | | 46 | 01·99 | 49 | 502·3 | | | 2 11 | 0 | 15·78 | 2 | 534·5 | 3 | 640·3 |
| | | | | | 50 | 01·78 | 52 | 501·2 | 53 | 460·4 | 2 12 | 0 | 14·91 | 2 | 527·0 | 3 | 627·6 |
| 15 | 504·3 | | | | 55 | 25 00·03 | 57 | 517·1 | 58 | 490·1 | | 10 | 18·57 | 12 | 528·9 | 13 | 620·4 |
| 16 | 493·2 | 16 | 618·6 | 1 11 | 0 | 24 59·10 | 2 | 533·5 | 3 | 511·8 | | 15 | 20·13 | 17 | 531·7 | 18 | 616·1 |
| 17 | 488·1 | | | | 5 | 25 06·53 | 7 | 526·5 | 8 | 521·8 | | 20 | 21·53 | 22 | 528·9 | 23 | 609·5 |
| 18 | 487·3 | 18 | 653·9 | | 10 | 09·05 | 12 | 524·7 | 13 | 543·5 | | 25 | 20·77 | 27 | 529·7 | 28 | 603·7 |
| 19 | 488·0 | | | | 15 | 09·71 | 17 | 527·5 | 18 | 554·5 | | 40 | 18·30 | 42 | 532·3 | 43 | 587·5 |
| 20 | 493·9 | | | | 20 | 11·75 | 22 | 526·5 | 23 | 564·9 | 2 13 | 0 | 13·83 | 2 | 531·6 | 3 | 574·8 |
| 21 | 502·9 | 21 | 695·8 | | 25 | 12·87 | 27 | 525·4 | 28 | 571·0 | | 30 | 18·13 | 32 | 529·1 | 33 | 588·0 |
| 22 | 509·9 | | | | 30 | 13·32 | 32 | 527·4 | 33 | 573·7 | | 45 | 14·84 | 47 | 532·8 | 48 | 586·5 |
| | | 24 | 703·5 | | 55 | 15·14 | 57 | 527·6 | 58 | 586·5 | 2 14 | 0 | 14·06 | 2 | 530·9 | 3 | 597·2 |
| 25 | 519·8 | | | 1 12 | 0 | 15·45 | 2 | 528·5 | 3 | 589·3 | | 15 | 16·03 | 17 | 527·4 | 18 | 609·1 |
| | | 26 | 694·9 | | | | | | | | | 30 | 16·68 | 32 | 530·7 | 33 | 609·2 |
| 27 | 521·5 | | | 2 6 | 0 | 25 15·91 | 2 | 546·1 | 3 | 681·8 | | 45 | 16·35 | 47 | 529·0 | 48 | 611·6 |
| 28 | 519·8 | 28 | 688·4 | | 15 | 14·03 | 17 | 527·6 | 18 | 707·0 | 2 15 | 0 | 16·28 | 2 | 531·3 | 3 | 614·1 |
| 29 | 517·5 | | | | 20 | 14·17 | 22 | 519·8 | 23 | 722·4 | 2 16 | 0 | 18·05 | 2 | 533·6 | 3 | 611·2 |
| 30 | 516·3 | | | | 25 | 12·69 | 27 | 526·0 | 28 | 742·0 | | 20 | 14·15 | | | | |
| 31 | 515·0 | 31 | 688·8 | | 30 | 10·85 | 32 | 526·3 | 33 | 761·2 | | 38 | 14·67 | | | | |
| 32 | 514·8 | | | | 35 | 08·45 | 37 | 533·1 | 38 | 761·2 | 2 17 | 0 | 14·77 | 2 | 533·7 | 3 | 621·8 |
| 33 | 513·8 | 33 | 694·8 | | 40 | 02·08 | 40 | 535·7 | | | | | | | | | |

BIFILAR. $k=0{\cdot}000140$. BALANCE. $k=0{\cdot}0000085$.

Oct. $2^d$ $6^h$ $39\frac{1}{2}^m$. The bifilar magnet commenced to vibrate about 15 divisions; $42^m$ the declination magnet vibrating 7′.
* See notes on the Aurora Borealis, *after* the *Extra Observations of Magnetometers.*

| Gött. Mean Time. | | Declination. | | Bifilar Corrected. | | Balance Corrected. | |
|---|---|---|---|---|---|---|---|
| d. | h. | Min. | ° ′ | Min. | Sc. Div. | Min. | Mic. Div. |
| 3 | 2 | 0 | 25 27·22 | 2 | 527·6 | 3 | 644·9 |
| | | 20 | 29·21 | 22 | 539·0 | 23 | 647·7 |
| | | 25 | 29·57 | | | 28 | 651·0 |
| | | 30 | 28·92 | 32 | 529·6 | 33 | 654·4 |
| | | 35 | 28·11 | 37 | 519·1 | 38 | 659·4 |
| | | 40 | 27·08 | 42 | 513·5 | 43 | 659·1 |
| | | 45 | 27·22 | 47 | 520·1 | | |
| | | 50 | 25·31 | 52 | 520·4 | 53 | 661·0 |
| 3 | 3 | 0 | 21·57 | 2 | 519·8 | 3 | 664·7 |
| | | 10 | 19·76 | 12 | 525·7 | 13 | 664·8 |
| | | 15 | 20·65 | 17 | 528·9 | | |
| | | 25 | 22·13 | 27 | 533·8 | 28 | 664·6 |
| | | 35 | 22·47 | 37 | 530·9 | | |
| 3 | 4 | 0 | 21·27 | 2 | 533·2 | 3 | 660·8 |
| 4 | 10 | 0 | 25 11·24 | 2 | 533·0 | 3 | 625·3 |
| | | 20 | 12·73 | 22 | 531·6 | 23 | 628·1 |
| 4 | 11 | 0 | 14·57 | 2 | 529·4 | 3 | 631·3 |
| 4 | 12 | 0 | 14·82 | 2 | 542·0 | 3 | 600·1 |
| | | 10 | 14·77 | 12 | 540·5 | 13 | 599·8 |
| 4 | 13 | 0 | 11·99 | 2 | 531·0 | 3 | 608·7 |
| 5 | 9 | 0 | 25 08·56 | 2 | 538·0 | 3 | 639·2 |
| | | 10 | 07·31 | 12 | 544·2 | 13 | 636·2 |
| | * | 15 | 09·12 | 17 | 544·3 | | |
| | | 30 | 11·17 | 32 | 531·2 | 33 | 634·8 |
| | | 35 | 09·29 | 37 | 529·6 | | |
| | | 40 | 08·41 | | | | |
| | | 50 | 09·89 | 52 | 530·0 | 53 | 639·6 |
| 5 | 10 | 0 | 10·13 | 2 | 526·3 | 3 | 639·4 |
| | | 10 | 11·52 | 12 | 525·6 | 13 | 642·0 |
| | | 25 | 13·84 | 27 | 526·9 | 28 | 643·4 |
| | | 35 | 13·46 | 37 | 535·2 | 38 | 637·7 |
| 5 | 11 | 0 | 13·74 | 2 | 530·1 | 3 | 637·3 |
| 7 | 10 | 0 | 25 09·69 | 2 | 542·0 | 3 | 625·7 |
| | | 15 | 09·91 | 17 | 541·6 | 18 | 624·1 |
| | | 30 | 11·93 | 32 | 532·0 | 33 | 629·0 |
| | | 40 | 09·17 | 42 | 548·7 | 43 | 619·5 |
| | | 45 | 10·48 | 47 | 555·8 | 48 | 615·2 |
| | | 50 | 11·68 | 52 | 556·2 | 53 | 612·2 |
| | | 55 | 12·25 | 57 | 551·3 | 58 | 609·5 |
| 7 | 11 | 0 | 12·35 | 2 | 543·5 | 3 | 610·5 |
| | | 15 | 12·29 | 17 | 536·3 | 18 | 611·6 |
| | | 30 | 13·43 | 32 | 536·9 | 33 | 608·3 |
| | | 45 | 12·40 | 47 | 534·0 | 48 | 606·7 |
| 7 | 12 | 0 | 09·12 | 2 | 533·4 | 3 | 606·3 |
| 8 | 14 | 0 | 25 11·55 | 2 | 532·9 | 3 | 629·7 |
| | | 30 | 15·14 | 32 | 530·8 | | |
| 8 | 15 | 0 | 15·02 | 2 | 534·9 | 3 | 623·3 |
| 13 | 13 | 0 | 25 09·71 | 2 | 543·2 | 3 | 606·0 |
| | | 15 | 09·82 | 17 | 543·8 | | |
| 13 | 14 | 0 | 10·38 | 2 | 536·0 | 3 | 606·0 |
| 16 | 14 | 0 | 25 16·26 | 2 | 540·1 | 3 | 587·3 |
| | | 10 | 14·57 | 12 | 539·1 | 13 | 585·8 |
| | | 15 | 14·20 | 17 | 537·4 | 18 | 586·8 |
| 16 | 15 | 0 | 13·17 | 2 | 537·7 | 3 | 587·5 |

| Gött. Mean Time. | | Declination. | | Bifilar Corrected. | | Balance Corrected. | |
|---|---|---|---|---|---|---|---|
| d. | h. | Min. | ° ′ | Min. | Sc. Div. | Min. | Mic. Div. |
| 19 | 10 | 0 | 25 12·72 | 2 | 548·5 | 3 | 617·5 |
| | | 15 | 11·30 | 17 | 540·9 | 18 | 619·0 |
| | | 30 | 11·12 | 32 | 545·8 | | |
| 19 | 11 | 0 | 12·16 | 2 | 548·6 | 3 | 609·4 |
| | | 12 | 11·00 | 13 | 544·6 | 14 | 606·2 |
| 19 | 12 | 0 | 11·17 | 2 | 538·0 | 3 | 605·6 |
| 20 | 14 | 0 | 25 11·21 | 2 | 521·9 | 3 | 618·3 |
| | * | 8 | 12·01 | 9 | 519·3 | 9 | 617·1 |
| | | 14 | 21·54 | 16 | 523·9 | 17 | 590·9 |
| | | 15 | 23·56 | 18 | 536·6 | | |
| | | 19 | 23·45 | 21 | 537·8 | 22 | 556·4 |
| | | 20 | 22·53 | 23 | 532·8 | | |
| | | 26 | 21·64 | 27 | 532·3 | 28 | 515·8 |
| | | | | 29 | 525·5 | | |
| | | 30 | 20·62 | 32 | 518·2 | 33 | 485·3 |
| | | | | 34 | 515·9 | | |
| | | 35 | 20·58 | 37 | 510·2 | 38 | 462·1 |
| | | | | 39 | 502·4 | | |
| | | 40 | 20·62 | 42 | 499·4 | 43 | 429·6 |
| | | | | 44 | 504·6 | | |
| | | 45 | 19·14 | 47 | 497·9 | 48 | 402·6 |
| | | | | 49 | 502·3 | | |
| | | 50 | 15·42 | 52 | 513·3 | 53 | 399·1 |
| | | | | 54 | 510·8 | | |
| | | 55 | 14·94 | 57 | 509·1 | 58 | 391·6 |
| 20 | 15 | 0 | 14·71 | 2 | 507·0 | 3 | 389·9 |
| | | 5 | 15·31 | 7 | 522·9 | 8 | 392·8 |
| | | 11 | 15·71 | 12 | 512·1 | 13 | 381·9 |
| | | | | 14 | 512·6 | | |
| | | 15 | 13·69 | 17 | 518·8 | 18 | 369·2 |
| | | | | 19 | 525·7 | | |
| | | 20 | 13·77 | 22 | 520·3 | 23 | 356·6 |
| | | | | 24 | 522·6 | | |
| | | 25 | 13·44 | 27 | 526·8 | 28 | 356·4 |
| | | 30 | 14·50 | 32 | 533·4 | 33 | 359·3 |
| | | | | 34 | 536·0 | | |
| | | 35 | 16·16 | 37 | 533·7 | 38 | 363·0 |
| | | 40 | 18·87 | 42 | 542·9 | 43 | 355·6 |
| | | | | 44 | 546·0 | | |
| | | 45 | 20·89 | 47 | 546·5 | 48 | 339·5 |
| | | | | 49 | 543·0 | | |
| | | 50 | 19·41 | 52 | 553·7 | 53 | 327·1 |
| | | | | 54 | 550·6 | | |
| | | 55 | 20·22 | 57 | 544·9 | 58 | 314·6 |
| | | | | 59 | 544·7 | | |
| 20 | 16 | 0 | 21·21 | 2 | 536·0 | 3 | 314·4 |
| | * | 5 | 19·68 | 7 | 516·3 | 8 | 300·0 |
| | | | | 9 | 505·2 | | |
| | | 10 | 16·57 | 11 | 487·6 | | |
| | | | | 12 | 481·7 | | |
| | | | | 13 | 472·3 | 13 | 291·5 |
| | | | | 14 | 465·3 | | |
| | | 15 | 17·36 | 16 | 454·5 | | |
| | | | | 17 | 447·6 | | |
| | | | | 18 | 441·9 | 18 | 277·4 |
| | | | | 19 | 435·7 | | |
| | | 20 | 23·34 | 21 | 431·0 | | |
| | | | | 22 | 426·2 | | |
| | | | | 23 | 429·7 | 23 | 251·1 |
| | | | | 24 | 427·3 | | |

| Gött. Mean Time. | | Declination. | |
|---|---|---|---|
| d. | h. | Min. | ° ′ |
| 20 | 16 | 25 | 25 32·51 |
| | | 30 | 34·54 |
| | | 34 | 54·47 |
| | | 38 | 48·91 |
| | | 41 | 47·17 |
| | | 44 | 43·89 |
| | | 46 | 41·54 |
| | | 50 | 37·67 |
| | | 55 | 34·27 |
| | | 59 | 26·47 |
| 20 | 17 | 0 | 25·16 |
| | * | 5 | 23·98 |
| | | 10 | 22·82 |
| | | 15 | 25·29 |
| | | 20 | 26·72 |
| | | 25 | 29·72 |
| | | 30 | 32·66 |
| | | 35 | 33·48 |
| | | 40 | 31·75 |
| | | 45 | 30·27 |
| | | 50 | 28·90 |
| | | 55 | 27·26 |
| 20 | 18 | 0 | 28·01 |
| | * | | |
| | | 5 | 26·60 |
| | | 10 | 25·09 |
| | | 15 | 26·00 |
| | | 25 | 27·41 |
| | | 30 | 30·76 |
| | | 36 | 34·81 |
| | | 40 | 36·17 |
| | | 41 | 36·46 |
| | | 45 | 37·77 |
| | | 46 | 37·24 |
| | | 50 | 36·63 |
| | | 55 | 36·69 |
| 20 | 19 | 0 | 36·52 |
| | | 5 | 34·54 |
| | | 10 | 33·74 |
| | | 15 | 33·00 |
| | | 20 | 35·23 |
| | | 25 | 30·67 |
| | | 30 | 28·92 |
| | | 35 | 26·11 |
| | | 40 | 24·72 |
| | | 45 | 27·17 |
| | | 50 | 28·45 |

BIFILAR. $k$=0·000140. BALANCE. $k$=0·0000085.

Oct. 16d. The copper ring removed from the declinometer; the readings in future are taken generally at the ends of the vibrations nearest to the usual seconds.

Oct. 16d 14h—21d 2h. Clock 22s slow; set right at 21d 2h.

* See notes on the Aurora Borealis, *after* the *Extra Observations of Magnetometers.*

| Bifilar Corrected. | | Balance Corrected. | | Gött. Mean Time. | | Declination. | | Bifilar Corrected. | | Balance Corrected. | | Gött. Mean Time. | | Declination. | | Bifilar Corrected. | | Balance Corrected. | |
|---|---|---|---|---|---|---|---|---|---|---|---|---|---|---|---|---|---|---|---|
| Min. | Sc. Div. | Min. | Mic. Div. | d. | h. | Min. | ° ′ | Min. | Sc. Div. | Min. | Mic. Div. | d. | h. | Min. | ° ′ | Min. | Sc. Div. | Min. | Mic. Div. |
| 26 | 421·7 | | | 20 | 19 | 55 | 25 24·72 | 57 | 512·2 | | | 21 | 2 | 55 | 25 13·39 | 57 | 535·7 | | |
| 27 | 417·4 | | | 20 | 20 | 0 | 19·75 | 2 | 519·8 | 3 | 510·6 | 21 | 3 | 0 | 13·76 | 2 | 533·3 | 3 | 763·2 |
| 28 | 413·5 | 28 | 200·0 | | | 5 | 17·58 | 7 | 531·2 | 8 | 514·9 | | | 5 | 14·99 | 7 | 525·3 | 8 | 748·6 |
| 29 | 403·7 | | | | | 10 | 20·82 | 12 | 528·5 | 13 | 520·3 | | | 10 | 15·69 | 12 | 536·2 | 13 | 741·3 |
| 31 | 386·3 | 31 | 213·9 | | | 15 | 20·18 | 17 | 523·4 | 18 | 522·5 | | | 15 | 13·29 | 17 | 543·5 | 18 | 734·6 |
| 32 | 393·4 | | | | | 20 | 20·15 | 22 | 522·0 | 23 | 525·8 | | | 20 | 20·11 | 22 | 534·8 | 23 | 729·1 |
| 33 | 405·1 | 33 | 223·2 | | | 25 | 19·68 | 27 | 520·2 | 28 | 530·2 | | | 25 | 19·78 | 27 | 538·0 | 28 | 723·0 |
| | | | | | | 30 | 21·83 | 32 | 514·1 | 33 | 536·0 | | | 30 | 19·44 | 32 | 541·1 | 33 | 720·8 |
| 39 | 443·1 | | | | | 35 | 19·86 | 37 | 515·0 | 38 | 540·7 | | | 35 | 19·51 | 37 | 531·3 | 38 | 716·3 |
| 40 | 451·9 | 40 | 125·6 | | | 40 | 19·64 | 42 | 513·2 | 43 | 546·4 | | | 40 | 18·90 | 42 | 531·1 | 43 | 710·2 |
| 42 | 472·1 | | | | | 45 | 19·01 | 47 | 516·4 | 48 | 550·0 | | | 50 | 21·37 | 52 | 536·8 | 53 | 704·4 |
| 43 | 481·3 | 43 | 119·4 | | | 50 | 20·89 | 52 | 511·5 | 53 | 553·5 | 21 | 4 | 0 | 19·84 | 2 | 526·7 | 3 | 704·9 |
| 45 | 496·0 | | | | | 55 | 18·54 | 57 | 512·0 | 58 | 553·7 | | | 15 | 18·60 | 17 | 531·8 | 18 | 689·9 |
| 48 | 505·4 | 49 | 113·3 | 20 | 21 | 0 | 17·33 | 2 | 510·3 | 3 | 557·5 | | | 30 | 18·74 | 32 | 526·3 | 33 | 683·6 |
| 52 | 513·0 | 51 | 114·1 | | | 10 | 15·17 | 12 | 505·6 | 13 | 564·2 | 21 | 5 | 0 | 19·24 | 2 | 521·6 | 3 | 683·6 |
| 54 | 515·5 | | | | | 20 | 17·29 | 22 | 503·1 | 23 | 574·5 | | | 30 | 13·41 | 32 | 533·8 | 33 | 667·5 |
| 55 | 510·9 | 56 | 117·4 | | | 30 | 16·95 | 32 | 493·2 | 33 | 579·1 | | | 35 | 11·98 | 37 | 541·5 | 38 | 666·4 |
| 57 | 505·2 | 58 | 117·9 | | | 40 | 20·53 | 42 | 479·1 | 43 | 592·5 | | | 40 | 15·20 | 42 | 538·8 | 43 | 665·8 |
| 59 | 504·0 | | | | | 45 | 21·70 | 47 | 463·9 | 48 | 599·9 | | | 50 | 17·65 | 52 | 527·5 | 53 | 656·9 |
| 2 | 501·7 | 3 | 142·8 | | | 50 | 21·41 | 52 | 464·1 | 53 | 605·1 | 21 | 6 | 0 | 16·70 | 2 | 524·7 | 3 | 651·0 |
| 7 | 485·1 | 8 | 182·0 | | | 55 | 24·06 | 57 | 472·8 | 58 | 612·1 | | | 16 | 12·96 | 17 | 529·0 | 18 | 646·9 |
| 9 | 481·2 | | | 20 | 22 | 0 | 22·69 | 2 | 468·8 | 3 | 625·4 | | | 20 | 13·00 | 22 | 526·1 | 23 | 647·8 |
| 12 | 487·1 | 13 | 206·0 | | | 5 | 22·03 | 7 | 483·4 | 8 | 637·2 | | | 30 | 12·46 | 32 | 532·0 | 33 | 646·2 |
| 17 | 481·1 | 18 | 213·7 | | | 10 | 24·42 | 12 | 484·4 | 13 | 655·7 | 21 | 7 | 0 | 07·31 | 2 | 530·1 | 3 | 638·2 |
| 22 | 480·9 | 23 | 224·9 | | | 15 | 22·50 | 17 | 489·2 | 18 | 677·2 | | | 5 | 25 03·70 | 7 | 528·4 | 8 | 635·8 |
| 24 | 475·1 | | | | | 20 | 19·26 | 22 | 495·3 | 23 | 682·9 | | | 10 | 24 58·42 | 12 | 544·7 | 13 | 629·7 |
| 27 | 462·3 | 28 | 232·5 | | | 25 | 21·41 | 27 | 495·1 | 28 | 671·6 | | | 15 | 25 02·39 | 17 | 546·5 | 18 | 632·1 |
| 29 | 463·5 | | | | | 30 | 28·08 | 32 | 486·2 | 33 | 662·6 | | | 20 | 04·64 | 22 | 544·1 | 23 | 632·4 |
| 32 | 454·5 | 33 | 226·2 | | | 34 | 28·87 | | | | | | | 25 | 08·48 | 27 | 536·0 | 28 | 633·1 |
| 34 | 452·2 | | | | | 35 | 29·64 | 37 | 486·2 | 38 | 658·6 | | | 31 | 09·15 | 32 | 530·4 | | |
| 37 | 455·4 | 38 | 245·9 | | | 40 | 29·19 | 42 | 487·2 | 43 | 658·2 | 21 | 8 | 0 | 13·59 | 2 | 525·0 | 3 | 627·5 |
| 42 | 467·8 | 43 | 267·2 | | | 45 | 31·88 | | | | | 21 | 9 | 0 | 05·87 | 2 | 555·8 | 3 | 593·5 |
| 47 | 472·9 | 48 | 280·0 | | | 46 | 31·19 | 47 | 482·4 | 48 | 664·0 | | | 5 | 11·46 | 7 | 543·9 | 8 | 616·6 |
| 52 | 478·2 | 53 | 295·3 | | | 49 | 29·14 | | | | | | | 10 | 10·85 | 12 | 537·7 | 13 | 589·1 |
| 57 | 473·5 | 58 | 311·0 | | | 50 | 28·62 | 52 | 489·6 | 53 | 672·3 | | | 15 | 09·79 | 17 | 540·6 | 18 | 586·6 |
| 59 | 469·8 | | | | | 55 | 25·27 | 57 | 497·4 | 58 | 679·2 | | | 20 | 06·39 | 22 | 550·8 | 23 | 583·0 |
| 2 | 460·5 | 3 | 334·7 | 20 | 23 | 0 | 26·30 | 2 | 508·9 | 3 | 676·4 | | | 25 | 05·72 | 27 | 556·0 | 28 | 576·1 |
| 4 | 460·3 | | | | | 5 | 27·81 | 7 | 503·1 | 8 | 672·1 | | | 30 | 06·93 | 32 | 555·9 | 33 | 573·7 |
| 7 | 462·0 | 8 | 352·1 | | | 10 | 27·82 | 12 | 502·0 | 13 | 670·3 | | | 35 | 07·67 | 37 | 558·7 | 38 | 572·1 |
| 12 | 474·2 | 13 | 377·4 | | | 15 | 27·51 | 17 | 499·1 | 18 | 670·5 | | | 40 | 11·14 | 42 | 553·2 | 43 | 569·5 |
| 17 | 474·3 | 18 | 391·7 | | | 20 | 27·14 | 22 | 497·9 | 23 | 672·6 | | | 45 | 13·32 | 47 | 542·9 | 48 | 567·7 |
| 27 | 476·1 | 28 | 397·4 | | | 30 | 25·56 | 32 | 505·4 | 33 | 675·6 | 21 | 10 | 0 | 07·78 | 2 | 533·9 | 3 | 556·0 |
| 32 | 473·5 | 33 | 401·2 | | | 45 | 25·06 | 47 | 518·8 | 48 | 678·8 | | | 10 | 06·26 | 12 | 547·2 | 13 | 550·0 |
| 37 | 477·9 | 38 | 395·2 | 21 | 0 | 0 | 23·99 | 2 | 496·2 | 3 | 690·2 | | | 15 | 06·06 | 17 | 547·7 | 18 | 546·9 |
| | | | | | | 15 | 23·78 | 17 | 510·7 | 18 | 686·3 | | | | | 27 | 539·2 | 28 | 545·9 |
| 42 | 480·2 | 43 | 396·1 | | | 30 | 24·30 | 32 | 496·2 | 33 | 691·8 | | | 36 | 09·82 | 37 | 518·2 | 38 | 547·6 |
| | | | | | | 46 | 29·03 | 48 | 523·9 | 49 | 682·1 | | | 40 | 07·54 | 42 | 520·3 | 43 | 546·6 |
| 47 | 483·2 | 48 | 401·4 | | | 55 | 31·21 | 57 | 521·5 | 58 | 683·7 | | | 45 | 06·90 | 47 | 527·4 | 48 | 544·7 |
| 52 | 494·9 | 53 | 412·8 | 21 | 1 | 0 | 31·36 | 2 | 519·6 | 3 | 685·2 | 21 | 11 | 0 | 06·03 | 2 | 535·7 | 3 | 539·7 |
| 57 | 499·2 | 58 | 424·0 | | | 10 | 28·29 | 12 | 526·9 | 13 | 692·9 | | | 30 | 04·76 | 32 | 527·7 | 33 | 532·7 |
| 2 | 503·1 | 3 | 438·4 | | | 25 | 22·11 | 27 | 523·4 | 28 | 708·8 | 21 | 12 | 0 | 07·67 | 2 | 525·3 | 3 | 549·0 |
| 7 | 506·7 | 8 | 450·1 | | | 30 | 25·98 | 32 | 520·8 | | | 21 | 16 | 0 | 16·92 | 2 | 527·2 | 3 | 542·3 |
| 12 | 507·8 | 13 | 461·5 | | | 40 | 27·28 | 42 | 523·7 | 43 | 713·0 | | | 30 | 15·39 | 32 | 527·6 | 33 | 503·8 |
| 17 | 513·1 | 18 | 466·9 | 21 | 2 | 0 | 25·11 | 2 | 532·6 | 3 | 714·4 | 21 | 17 | 0 | 15·47 | 2 | 532·1 | 3 | 561·5 |
| 22 | 524·9 | 23 | 465·7 | | | 20 | 29·53 | 22 | 537·0 | 23 | 738·1 | | | | | | | | |
| 27 | 527·8 | 28 | 467·9 | | | 31 | 28·85 | 32 | 530·6 | 33 | 771·9 | 22 | 4 | 0 | 25 11·41 | 2 | 534·8 | 3 | 653·2 |
| 32 | 526·0 | 33 | 472·2 | | | 35 | 24·75 | 37 | 514·9 | 38 | 795·3 | | | 20 | 14·87 | 22 | 534·0 | 23 | 646·1 |
| 37 | 522·2 | 38 | 479·6 | | | 40 | 20·45 | 42 | 520·3 | 43 | 788·9 | | | 45 | 16·39 | 47 | 533·5 | 48 | 633·3 |
| 42 | 529·2 | 43 | 484·5 | | | 45 | 12·89 | 47 | 535·7 | 48 | 785·5 | 22 | 5 | 0 | 15·85 | 2 | 532·0 | 3 | 630·2 |
| 47 | 532·9 | 48 | 493 4 | | | 49 | 12·69 | | | | | 22 | 15 | 0 | 18·87 | 2 | 533·4 | 3 | 575·8 |
| 52 | 524·9 | 53 | 503·4 | | | 50 | 12·58 | 52 | 538·9 | 53 | 773·8 | | | 31 | 13·64 | 32 | 528·8 | 33 | 569·9 |

BIFILAR. $k$=0·000140. BALANCE. $k$=0·0000085.

| Gött. Mean Time. | Declination. | Bifilar Corrected. | | Balance Corrected. | |
|---|---|---|---|---|---|
| d. h. | Min. ° ′ | Min. | Sc. Div. | Min. | Mic. Div. |
| 22 16 | 0 25 16·18 | 2 | 528·3 | 3 | 577·6 |
| 24 10 | 0 25 13·30 | 2 | 532·2 | 3 | 611·1 |
| | 10 08·32 | 12 | 531·9 | 13 | 610·2 |
| | 15 07·37 | 17 | 534·1 | 18 | 611·7 |
| | 25 10·23 | 27 | 522·7 | 28 | 613·8 |
| | 30 11·34 | | | | |
| 24 11 | 0 07·18 | 2 | 530·6 | 3 | 602·9 |
| 24 21 | 0 20·89 | 2 | 513·5 | 3 | 612·1 |
| | 15 22·47 | 17 | 511·9 | 18 | 613·9 |
| | 25 23·66 | | | | |
| 24 22 | 0 25·93 | 2 | 513·2 | 3 | 610·7 |
| | 30 25·26 | 31 | 513·1 | | |
| 24 23 | 0 24·32 | 2 | 512·0 | 3 | 614·4 |
| 25 8 | 0 25 12·29 | 2 | 512·8 | 3 | 649·6 |
| | 10 08·11 | 12 | 503·1 | 13 | 659·5 |
| | 15 05·80 | 17 | 496·5 | 18 | 667·8 |
| | 20 25 01·31 | 22 | 496·2 | 23 | 679·4 |
| | 25 24 57·98 | 27 | 479·2 | 28 | 678·3 |
| | 30 53·69 | 32 | 493·2 | 33 | 688·7 |
| | 35 44·50 | | | | |
| | 37 43·03 | 37 | 494·9 | 38 | 701·9 |
| | 38 41·85 | | | | |
| | 39 40·74 | | | | |
| | 40 39·29 | | | | |
| | 41 37·87 | 41 | 500·3 | | |
| | 42 37·10 | | | 42 | 697·5 |
| | 43 37·15 | 43 | 508·2 | | |
| | 44 37·02 | | | 44 | 697·6 |
| | 45 35·96 | 45 | 509·6 | | |
| | 46 35·96 | | | | |
| | 47 35·43 | 47 | 518·1 | | |
| | 48 35·47 | | | 48 | 698·2 |
| | 49 35·72 | 49 | 518·8 | | |
| | 50 36·14 | | | | |
| | 51 36·86 | 51 | 516·6 | | |
| | 52 37·24 | | | | |
| | 53 37·13 | | | 53 | 684·2 |
| | 54 37·96 | 54 | 523·1 | | |
| | 55 37·79 | 55 | 523·5 | | |
| | 56 38·95 | | | 56 | 674·9 |
| | 57 40·54 | 57 | 519·3 | | |
| | | | | 58 | 672·7 |
| 25 9 | 0 42·42 | 2 | 519·7 | 3 | 667·0 |
| | 5 46·25 | 7 | 516·5 | 8 | 656·3 |
| | 10 47·32 | 12 | 514·1 | 13 | 661·3 |
| | 15 48·56 | 17 | 512·2 | 18 | 654·3 |
| | 20 50·38 | 22 | 512·8 | 23 | 648·4 |
| | 25 52·57 | 27 | 516·0 | 28 | 641·6 |
| | 30 24 55·86 | 32 | 519·0 | 33 | 637·6 |
| | 40 25 01·83 | 42 | 517·2 | 43 | 631·8 |
| | 50 04·24 | 52 | 519·7 | 53 | 625·3 |
| 25 10 | 0 05·92 | 2 | 519·5 | 3 | 616·2 |
| | 10 06·73 | 12 | 521·9 | 13 | 613·3 |
| | 30 09·02 | 32 | 524·2 | 33 | 608·9 |
| 25 11 | 0 07·67 | 2 | 527·7 | 3 | 571·3 |
| | 10 04·58 | 12 | 530·7 | 13 | 555·1 |
| | 15 04·91 | 17 | 529·4 | 18 | 553·8 |
| | 20 25 04·39 | 22 | 529·0 | 23 | 553·2 |
| | 30 24 54·75 | 32 | 531·7 | 33 | 553·2 |

| Gött. Mean Time. | Declination. | Bifilar Corrected. | | Balance Corrected. | |
|---|---|---|---|---|---|
| d. h. | Min. ° ′ | Min. | Sc. Div. | Min. | Mic. Div. |
| 25 11 | 35 24 47·51 | 37 | 536·7 | 38 | 549·8 |
| | 40 46·80 | 42 | 536·4 | 43 | 548·0 |
| | 45 48·97 | 47 | 534·9 | 48 | 549·3 |
| | 50 51·05 | 52 | 525·4 | 53 | 547·7 |
| | 55 53·31 | 57 | 516·6 | 58 | 542·5 |
| 25 12 | 0 54·65 | 2 | 507·7 | 3 | 536·1 |
| | 5 24 57·71 | 7 | 499·5 | 8 | 536·1 |
| | 10 25 01·04 | 12 | 493·8 | 13 | 535·8 |
| | 15 05·83 | 17 | 494·9 | 18 | 530·7 |
| | 20 11·44 | 22 | 492·3 | 23 | 514·1 |
| | 25 13·16 | 27 | 492·7 | 28 | 480·7 |
| | 30 14·44 | 32 | 500·9 | 33 | 456·2 |
| | 35 16·12 | 37 | 504·2 | 38 | 441·8 |
| | 40 15·98 | 42 | 503·9 | 43 | 424·7 |
| | 45 13·61 | 47 | 510·7 | 48 | 416·1 |
| | 50 12·20 | 52 | 515·1 | 53 | 412·7 |
| | 55 10·77 | 57 | 518·9 | 58 | 412·4 |
| 25 13 | 0 08·86 | 2 | 519·0 | 3 | 418·3 |
| | 5 07·34 | 7 | 519·7 | 8 | 426·7 |
| | 10 05·58 | 12 | 519·6 | 13 | 439·2 |
| | 15 03·50 | 17 | 524·6 | 18 | 453·3 |
| | 20 03·02 | 22 | 528·4 | 23 | 465·7 |
| | 25 03·47 | 27 | 530·7 | 28 | 478·7 |
| | 30 05·08 | 32 | 530·5 | 33 | 488·6 |
| | 50 10·83 | 52 | 530·7 | 53 | 514·1 |
| 25 14 | 0 10·90 | 2 | 528·6 | 3 | 522·6 |
| | 30 12·06 | 32 | 533·0 | 33 | 549·3 |
| 25 15 | 0 06·36 | 2 | 533·0 | 3 | 544·8 |
| | 10 06·04 | 12 | 531·7 | 13 | 550·6 |
| | 20 09·24 | 22 | 530·4 | 23 | 553·2 |
| 25 16 | 0 15·74 | 2 | 526·9 | 3 | 564·3 |
| | 10 20·55 | 12 | 525·8 | 13 | 548·6 |
| | 15 24·55 | 17 | 522·7 | 18 | 544·1 |
| | 20 27·95 | 22 | 524·2 | 23 | 538·7 |
| | 25 29·86 | 27 | 526·5 | 28 | 533·7 |
| | 30 30·18 | 32 | 528·8 | 33 | 528·6 |
| | 35 31·16 | 37 | 527·9 | 38 | 524·1 |
| | 40 30·78 | 42 | 527·7 | 43 | 519·0 |
| | 45 29·41 | 47 | 530·6 | 48 | 515·2 |
| | 50 28·53 | 52 | 531·3 | 53 | 512·2 |
| | 55 26·75 | 57 | 533·3 | 58 | 509·3 |
| 25 17 | 0 25·33 | 2 | 529·1 | 3 | 504·6 |
| | 10 20·79 | 12 | 530·8 | 13 | 506·6 |
| | 20 15·67 | 22 | 536·1 | 23 | 513·4 |
| | 30 14·87 | 32 | 535·2 | 33 | 523·9 |
| | 40 13·12 | 42 | 535·1 | 43 | 528·5 |
| 25 18 | 0 12·45 | 2 | 544·2 | 3 | 545·6 |
| | 10 13·81 | 12 | 543·4 | 13 | 548·5 |
| | 20 15·89 | 22 | 540·0 | 23 | 552·3 |
| | 25 14·26 | 27 | 541·1 | 28 | 552·3 |
| | 30 17·13 | 32 | 540·3 | 33 | 554·5 |
| | 35 17·49 | | | | |
| 25 19 | 0 17·13 | 2 | 531·5 | 3 | 564·1 |
| | 15 17·27 | 17 | 522·9 | 18 | 572·5 |
| | 30 17·86 | 32 | 521·0 | 33 | 579·1 |
| | 40 20·49 | 42 | 535·8 | 43 | 577·0 |
| | 50 23·95 | 52 | 534·9 | 53 | 574·2 |
| 25 20 | 0 23·34 | 2 | 531·7 | 3 | 571·6 |
| | 15 24·84 | 17 | 530·4 | 18 | 565·0 |
| 25 21 | 0 20·58 | 2 | 517·0 | 3 | 576·8 |
| | 15 20·85 | 17 | 512·0 | 18 | 583·2 |

| Gött. Mean Time. | Declination. |
|---|---|
| d. h. | Min. ° ′ |
| 25 22 | 0 25 18·99 |
| 25 23 | 0 21·32 |
| | 5 21·23 |
| | 10 17·26 |
| | 15 20·70 |
| | 20 21·93 |
| | 25 21·66 |
| | 30 21·03 |
| | 35 20·77 |
| | 40 19·81 |
| | 45 19·71 |
| 26 0 | 0 19·81 |
| | 20 19·64 |
| 26 1 | 0 20·79 |
| 26 5 | 0 18·14 |
| | 10 06·70 |
| | 15 03·85 |
| | 20 25 02·32 |
| | 25 24 52·73 |
| | 30 44·07 |
| | 31 42·34 |
| | 32 41·38 |
| | 33 41·63 |
| | 34 41·75 |
| | 35 42·71 |
| | 36 44·43 |
| | 37 46·52 |
| | 40 51·67 |
| | 42 52·73 |
| | 45 52·60 |
| | 50 24 56·34 |
| | 55 25 01·56 |
| 26 6 | 0 04·21 |
| | 5 03·40 |
| | 10 04·75 |
| | 15 08·45 |
| | 20 12·85 |
| | 30 15·67 |
| | 40 17·22 |
| | 50 16·93 |
| 26 7 | 0 15·72 |
| 26 8 | 0 15·04 |
| | 10 25 12·45 |
| | 28 24 53·95 |
| | 30 53·95 |
| | 32 54·89 |
| | 35 55·33 |
| | 38 55·26 |
| | 40 54·79 |
| | 45 53·56 |
| | 50 54·55 |
| | 55 50·63 |
| 26 9 | 0 51·84 |
| | 5 55·33 |
| | 10 56·61 |

BIFILAR. $k$=0·000140. BALANCE. $k$=0·0000085.

Oct. 24d 10h. For observations before this time, see *Term-Day Observations*.

| Bifilar Corrected. | | Balance Corrected. | | Gött. Mean Time. | Declination. | | Bifilar Corrected. | | Balance Corrected. | | Gött. Mean Time. | Declination. | | Bifilar Corrected. | | Balance Corrected. | |
|---|---|---|---|---|---|---|---|---|---|---|---|---|---|---|---|---|---|
| Min. | Sc. Div. | Min. | Mic. Div. | d. h. | Min. | ° ′ | Min. | Sc. Div. | Min. | Mic. Div. | d. h. | Min. | ° ′ | Min. | Sc. Div. | Min. | Mic. Div. |
| 2 | 515·6 | 3 | 586·2 | 26 9 | 15 | 24 58·58 | 17 | 508·1 | 18 | 592·4 | 29 16 | 34 | 25 15·41 | | | | |
| 2 | 477·7 | 3 | 614·7 | | 20 | 24 58·20 | 22 | 511·5 | 23 | 594·0 | 29 17 | 0 | 15·18 | 2 | 535·6 | 3 | 595·0 |
| 7 | 475·6 | 8 | 621·4 | | 25 | 24 58·85 | 27 | 515·0 | 28 | 592·4 | | | | | | | |
| 11 | 493·7 | | | | | | 37 | 508·9 | 38 | 591·4 | 30 13 | 0 | 25 16·92 | 2 | 541·5 | 3 | 598·6 |
| 12 | 505·0 | 13 | 623·3 | | 40 | 25 05·08 | 42 | 497·5 | 43 | 596·9 | | 15 | 15·81 | 17 | 538·2 | | |
| 13 | 510·3 | | | | 45 | 03·88 | 47 | 504·1 | 48 | 598·0 | 30 14 | 0 | 14·96 | 2 | 533·0 | 3 | 591·4 |
| 14 | 502·4 | | | | 50 | 02·28 | 52 | 508·7 | 53 | 597·6 | | 30 | 17·80 | 32 | 535·2 | 33 | 585·2 |
| 15 | 498·5 | | | | 55 | 01·56 | 57 | 516·8 | 58 | 591·8 | 30 15 | 0 | 13·02 | 2 | 535·6 | 3 | 581·4 |
| 17 | 496·0 | 18 | 634·5 | 26 10 | 0 | 04·21 | 2 | 517·6 | 3 | 588·6 | | | | | | | |
| 22 | 498·6 | 23 | 638·0 | | 23 | 10·20 | | | | | 31 7 | 0 | 25 17·06 | 2 | 527·1 | 3 | 626·4 |
| 27 | 503·7 | 28 | 638·1 | | 25 | 10·94 | 27 | 567·1 | 28 | 484·1 | | 15 | 16·05 | 17 | 534·3 | 18 | 627·2 |
| 32 | 508·7 | 33 | 635·3 | | 30 | 12·67 | 32 | 544·2 | 33 | 467·9 | 31 8 | 0 | 13·69 | 2 | 536·0 | 3 | 616·3 |
| 37 | 512·2 | 38 | 633·2 | | 35 | 16·38 | 37 | 547·9 | 38 | 460·0 | 31 9 | 0 | 17·67 | 2 | 520·7 | 3 | 576·8 |
| 42 | 520·3 | 43 | 631·3 | | 40 | 20·56 | 42 | 539·8 | 43 | 468·0 | | 10 | 08·01 | 12 | 535·7 | 13 | 582·2 |
| 47 | 520·6 | 48 | 629·5 | | 45 | 24·60 | 47 | 521·4 | 48 | 459·2 | | 20 | 10·68 | 22 | 536·3 | 23 | 587·8 |
| 2 | 525·7 | 3 | 621·7 | | 50 | 25·11 | 52 | 500·8 | 53 | 462·2 | 31 10 | 0 | 09·67 | 2 | 532·1 | 3 | 598·2 |
| 22 | 523·7 | 23 | 716·8 | | 55 | 18·92 | 57 | 491·9 | 58 | 473·3 | | | | | | | |
| 2 | 528·6 | 3 | 614·9 | | | | 59 | 498·6 | | | 1 7 | 0 | 25 18·28 | 2 | 528·6 | 3 | 635·8 |
| | | | | 26 11 | 0 | 07·27 | 2 | 510·4 | 3 | 476·0 | | 10 | 17·61 | 12 | 527·9 | 13 | 638·7 |
| 2 | 524·4 | 3 | 694·5 | | 5 | 04·98 | 7 | 521·0 | 8 | 478·0 | | 30 | 10·60 | 32 | 532·3 | 33 | 642·6 |
| 12 | 532·2 | 13 | 702·0 | | 10 | 04·68 | 12 | 526·7 | 13 | 487·0 | | 40 | 09·82 | 42 | 537·5 | 43 | 640·3 |
| 17 | 530·1 | 18 | 701·2 | | 15 | 04·14 | 17 | 532·0 | 18 | 493·1 | | 55 | 12·06 | 57 | 535·2 | 58 | 633·9 |
| 22 | 525·4 | 23 | 697·2 | | 20 | 06·05 | 22 | 532·7 | 23 | 499·8 | 1 8 | 0 | 11·55 | 2 | 532·7 | 3 | 635·3 |
| 27 | 534·0 | 28 | 696·7 | | 25 | 08·19 | 27 | 527·8 | 28 | 505·4 | 1 11 | 0 | 05·52 | 2 | 541·3 | 3 | 593·4 |
| | | | | | 30 | 07·04 | 32 | 530·1 | 33 | 508·9 | | 5 | 05·15 | 7 | 541·9 | 8 | 592·6 |
| 32 | 545·6 | | | | 45 | 06·26 | 47 | 524·6 | 48 | 515·1 | | 10 | 04·68 | 12 | 541·6 | 13 | 591·3 |
| | | 33 | 687·3 | | 50 | 03·37 | 52 | 528·1 | 53 | 516·9 | | 26 | 05·85 | 27 | 534·6 | | |
| | | | | 26 12 | 0 | 03·70 | 2 | 531·2 | 3 | 525·9 | | 50 | 09·53 | 51 | 527·1 | 52 | 593·4 |
| | | | | | 18 | 08·08 | 19 | 525·2 | 20 | 536·5 | 1 12 | 0 | 09·87 | 2 | 528·6 | 3 | 593·2 |
| | | | | | | | | | | | 1 15 | 0 | 16·12 | 2 | 531·0 | 3 | 600·4 |
| 36 | 562·2 | 37 | 682·0 | 27 14 | 0 | 25 09·62 | 2 | 525·5 | 3 | 550·3 | | 30 | 14·33 | 31 | 534·5 | 33 | 594·8 |
| 38 | 562·9 | | | | 15 | 12·22 | 17 | 524·2 | 18 | 560·4 | 1 16 | 0 | 11·03 | 2 | 531·7 | 3 | 593·7 |
| | | | | | 30 | 14·04 | 32 | 525·5 | 33 | 562·6 | | 31 | 12·78 | 32 | 533·9 | 33 | 596·0 |
| 42 | 550·5 | 43 | 682·0 | 27 15 | 0 | 13·09 | 2 | 525·9 | 3 | 570·8 | 1 17 | 0 | 13·57 | 2 | 534·9 | 3 | 599·1 |
| 47 | 550·3 | 48 | 676·3 | 27 16 | 0 | 19·08 | 2 | 528·1 | 3 | 572·0 | | | | | | | |
| 52 | 547·9 | 53 | 673·2 | | 15 | 16·13 | 17 | 531·0 | 18 | 572·1 | 2 6 | 0 | 25 17·89 | 2 | 524·2 | 3 | 620·6 |
| 57 | 532·4 | 58 | 672·7 | 27 17 | 0 | 15·96 | 2 | 532·5 | 3 | 578·1 | | 20 | 13·46 | 22 | 537·8 | 23 | 622·3 |
| 2 | 523·9 | 3 | 670·6 | | | | | | | | | 35 | 14·55 | 37 | 543·6 | 38 | 622·4 |
| 7 | 527·0 | 8 | 665·6 | 28 12 | 0 | 25 12·98 | 2 | 518·8 | 3 | 577·8 | 2 7 | 0 | 16·55 | 2 | 538·8 | 3 | 623·0 |
| 12 | 535·5 | 13 | 660·4 | | 10 | 12·76 | 12 | 527·6 | 13 | 574·5 | 2 10 | 0 | 04·88 | 2 | 530·8 | 3 | 598·7 |
| 17 | 536·7 | 18 | 658·0 | | 25 | 12·72 | 27 | 531·2 | 28 | 574·3 | | 5 | 25 02·15 | 7 | 533·4 | 8 | 598·6 |
| 22 | 534·1 | 23 | 656·3 | 28 13 | 0 | 14·15 | 2 | 536·9 | 3 | 583·3 | | 10 | 24 59·68 | 12 | 540·0 | 13 | 597·3 |
| 32 | 526·8 | 33 | 648·1 | | | | | | | | | 15 | 24 58·32 | 17 | 543·2 | 18 | 594·4 |
| 42 | 529·4 | 43 | 640·1 | 29 8 | 0 | 25 07·76 | 2 | 534·5 | 3 | 621·2 | | 20 | 24 58·82 | 22 | 544·2 | 23 | 591·0 |
| 52 | 531·2 | 53 | 633·8 | | 10 | 04·88 | 11 | 555·8 | | | | 25 | 25 01·01 | 27 | 548·3 | 28 | 586·3 |
| 2 | 532·9 | 3 | 630·8 | | | | 12 | 556·2 | 13 | 609·9 | | 30 | 03·77 | 32 | 549·7 | 33 | 583·0 |
| 2 | 534·6 | 3 | 624·9 | | 15 | 08·56 | 17 | 552·3 | 18 | 608·4 | | 35 | 03·87 | 37 | 556·6 | 38 | 578·2 |
| 10 | 530·6 | | | | 20 | 09·53 | 22 | 557·3 | 23 | 602·3 | | 40 | 05·05 | 42 | 558·4 | 43 | 576·8 |
| 29 | 567·5 | 30 | 596·6 | | 25 | 10·03 | 27 | 556·7 | 28 | 597·6 | | 45 | 06·77 | 47 | 559·9 | 48 | 574·7 |
| 31 | 568·9 | | | | 30 | 12·69 | 32 | 538·8 | 33 | 597·4 | | 50 | 11·32 | 52 | 555·4 | 53 | 572·9 |
| 32 | 568·4 | 33 | 594·7 | | 35 | 08·29 | 37 | 535·0 | 38 | 594·2 | | 55 | 14·94 | 57 | 546·4 | 58 | 572·3 |
| 34 | 563·7 | | | | 40 | 05·89 | 42 | 535·8 | 43 | 592·9 | 2 11 | 0 | 15·81 | 2 | 537·7 | 3 | 572·9 |
| 37 | 555·4 | | | | 45 | 06·32 | 47 | 531·5 | 48 | 593·7 | | 10 | 14·73 | 12 | 528·5 | 13 | 572·3 |
| | | 38 | 593·5 | | 50 | 04·28 | 52 | 533·4 | 53 | 593·9 | | 20 | 09·27 | 22 | 527·0 | 23 | 575·1 |
| 42 | 544·0 | 43 | 588·0 | | 55 | 05·05 | 57 | 531·8 | | | | 25 | 06·90 | | | | |
| 47 | 542·6 | 48 | 584·6 | 29 9 | 0 | 05·40 | 2 | 533·0 | 3 | 598·3 | | 30 | 03·97 | 32 | 530·2 | 33 | 576·1 |
| 52 | 532·4 | 53 | 584·5 | | | | | | | | | 40 | 01·65 | 42 | 532·3 | 43 | 575·8 |
| 57 | 534·3 | 58 | 580·5 | 29 15 | 0 | 25 18·60 | 2 | 526·4 | 3 | 602·3 | | 50 | 03·57 | 52 | 533·1 | | |
| 2 | 531·1 | 3 | 581·6 | | 20 | 17·26 | 22 | 530·2 | 23 | 596·7 | 2 12 | 0 | 04·04 | 2 | 528·2 | 3 | 578·3 |
| 7 | 520·6 | 8 | 585·8 | | 31 | 16·73 | | | | | | 15 | 11·37 | 17 | 531·5 | 18 | 582·7 |
| 12 | 512·9 | 13 | 589·6 | 29 16 | 0 | 18·03 | 2 | 531·2 | 3 | 591·9 | | 45 | 07·24 | 47 | 536·5 | 48 | 583·7 |

BIFILAR. $k=0{\cdot}000140$. BALANCE. $k=0{\cdot}0000085$.

| Gött. Mean Time. | | Declination. | | Bifilar Corrected. | | Balance Corrected. | |
|---|---|---|---|---|---|---|---|
| d. | h. | Min. | ° ′ | Min. | Sc. Div. | Min. | Mic. Div. |
| 3 | 17 | 0 | 25 18·10 | 2 | 523·2 | 3 | 582·2 |
| | | 10 | 17·61 | 11 | 526·2 | 12 | 579·3 |
| 3 | 18 | 0 | 16·82 | 2 | 532·0 | 3 | 578·6 |
| 3 | 19 | 0 | 16·25 | 2 | 535·1 | 3 | 584·8 |
| | | 20 | 16·95 | 22 | 534·2 | 23 | 587·0 |
| 3 | 20 | 0 | 14·43 | 2 | 532·8 | 3 | 593·0 |
| 4 | 4 | 0 | 25 14·21 | 2 | 529·9 | 3 | 629·5 |
| | | 15 | 14·17 | 17 | 541·8 | 18 | 633·6 |
| | | 30 | 20·18 | 32 | 538·9 | 33 | 640·3 |
| | | 40 | 19·96 | 42 | 532·8 | | |
| 4 | 5 | 0 | 21·09 | 2 | 531·2 | 3 | 638·3 |
| 4 | 9 | 0 | 04·91 | 2 | 528·6 | 3 | 623·6 |
| | | 10 | 03·45 | 12 | 525·1 | 13 | 625·5 |
| | | 26 | 06·43 | 27 | 525·9 | 28 | 627·9 |
| | | 45 | 12·11 | 47 | 533·9 | 48 | 617·8 |
| 4 | 10 | 0 | 08·86 | 2 | 529·2 | 3 | 616·0 |
| | | 10 | 05·55 | 12 | 533·3 | 13 | 614·4 |
| | | 20 | 06·01 | 22 | 534·2 | 23 | 612·1 |
| | | 25 | 06·10 | 27 | 531·9 | 28 | 614·0 |
| | | 30 | 05·56 | 32 | 530·3 | | |
| 4 | 11 | 0 | 08·48 | 2 | 527·8 | 3 | 614·3 |
| 4 | 13 | 0 | 09·60 | 2 | 537·4 | 3 | 582·7 |
| | | 10 | 07·17 | 11 | 533·8 | 12 | 581·3 |
| | | 30 | 06·68 | 31 | 530·6 | 32 | 587·2 |
| 4 | 14 | 0 | 12·48 | 2 | 535·9 | 3 | 589·1 |
| 5 | 15 | 0 | 25 15·17 | 2 | 542·4 | 3 | 598·7 |
| | | 15 | 15·65 | 17 | 536·3 | 18 | 597·2 |
| 5 | 16 | 0 | 13·25 | 2 | 534·6 | 3 | 597·0 |
| 11 | 5 | 0 | 25 21·54 | 2 | 522·2 | 3 | 663·1 |
| | | 15 | 20·82 | 17 | 525·2 | 18 | 680·8 |
| | | 25 | 18·37 | 27 | 514·6 | 28 | 695·6 |
| | | 30 | 16·80 | 32 | 514·1 | 33 | 701·5 |
| | | 35 | 15·15 | 37 | 518·0 | 38 | 704·1 |
| | | 40 | 14·60 | 42 | 515·2 | 43 | 708·2 |
| | | 45 | 13·02 | 47 | 522·3 | 48 | 706·2 |
| | | 50 | 13·19 | 52 | 524·0 | 53 | 706·6 |
| 11 | 6 | 0 | 13·93 | 2 | 532·5 | 3 | 699·9 |
| | * | 45 | 20·32 | 47 | 529·5 | 48 | 682·2 |
| 11 | 7 | 0 | 18·54 | 2 | 528·4 | 3 | 683·0 |
| | | 15 | 15·14 | 17 | 526·2 | 18 | 692·4 |
| | | 20 | 11·03 | 22 | 540·4 | 23 | 689·3 |
| | | | | 24 | 542·1 | | |
| | | 25 | 25 02·99 | 27 | 541·4 | 28 | 686·9 |
| | | 30 | 24 59·16 | 32 | 564·5 | 33 | 672·4 |
| | | 35 | 24 53·93 | 37 | 583·6 | 38 | 650·2 |
| | | | | 39 | 581·6 | | |
| | | 40 | 25 04·44 | 41 | 574·0 | | |
| | | | | 42 | 569·3 | 43 | 640·0 |
| | | | | 44 | 564·2 | | |
| | | 45 | 09·66 | 47 | 557·0 | 48 | 634·0 |
| | | 50 | 12·55 | 52 | 544·1 | 53 | 631·4 |
| | | 55 | 13·90 | 57 | 532·8 | 58 | 630·9 |
| 11 | 8 | 0 | 13·29 | 2 | 523·2 | 3 | 636·5 |
| | * | 5 | 11·07 | 7 | 521·6 | 8 | 637·5 |
| | | 10 | 08·99 | 12 | 526·9 | 13 | 637·9 |
| | | 15 | 08·68 | 17 | 527·7 | 18 | 640·8 |
| | | 20 | 08·99 | 22 | 527·9 | 23 | 641·7 |
| | | 25 | 10·54 | 27 | 528·4 | 28 | 643·0 |

| Gött. Mean Time. | | Declination. | | Bifilar Corrected. | | Balance Corrected. | |
|---|---|---|---|---|---|---|---|
| d. | h. | Min. | ° ′ | Min. | Sc. Div. | Min. | Mic. Div. |
| 11 | 8 | 50 | 25 06·29 | 52 | 530·5 | 53 | 658·0 |
| 11 | 9 | 0 | 06·50 | 2 | 531·1 | 3 | 663·1 |
| | | 30 | 06·90 | 31 | 519·4 | 32 | 664·9 |
| 11 | 10 | 0 | 05·22 | 2 | 524·8 | 3 | 654·4 |
| 11 | 11 | 0 | 06·26 | 2 | 522·6 | 3 | 651·2 |
| | * | 40 | 07·78 | 42 | 526·1 | 43 | 636·7 |
| 11 | 12 | 0 | 07·69 | 2 | 531·6 | 3 | 627·3 |
| 11 | 13 | 0 | 02·43 | 2 | 534·0 | 3 | 557·8 |
| | | 10 | 05·79 | 12 | 533·4 | 13 | 558·5 |
| | | 20 | 05·70 | 22 | 524·7 | | |
| | | 30 | 05·76 | 32 | 525·4 | 33 | 550·9 |
| 11 | 14 | 0 | 03·65 | 2 | 525·1 | 3 | 562·6 |
| | | 30 | 08·45 | 32 | 528·7 | 33 | 580·7 |
| 11 | 15 | 0 | 13·05 | 2 | 524·9 | 3 | 597·3 |
| 12 | 4 | 0 | 25 21·03 | 2 | 528·0 | 3 | 647·4 |
| | | 46 | 10·16 | 47 | 507·7 | 48 | 720·4 |
| | | 50 | 06·95 | 52 | 513·7 | 53 | 724·7 |
| | | 55 | 07·37 | 57 | 516·7 | 58 | 721·9 |
| 12 | 5 | 0 | 08·22 | 2 | 521·1 | 3 | 718·2 |
| | | ′ | | 12 | 528·9 | 13 | 714·5 |
| | | 15 | 17·02 | 17 | 532·9 | 18 | 709·8 |
| | | 21 | 21·53 | 22 | 531·0 | 23 | 709·2 |
| | | 25 | 23·05 | 27 | 526·8 | 28 | 706·9 |
| | | 30 | 22·57 | 32 | 522·8 | 33 | 702·6 |
| | | 35 | 20·45 | 37 | 524·8 | 38 | 695·2 |
| | | 40 | 20·25 | 42 | 525·9 | 43 | 691·4 |
| | | 45 | 20·32 | 47 | 527·6 | 48 | 687·6 |
| 12 | 6 | 0 | 18·14 | 2 | 535·8 | 3 | 670·1 |
| | | 32 | 16·48 | 33 | 537·7 | 34 | 652·7 |
| 12 | 7 | 0 | 15·52 | 2 | 538·5 | 3 | 642·4 |
| 12 | 12 | 0 | 09·26 | 2 | 530·4 | 3 | 624·2 |
| | | 10 | 07·79 | 12 | 528·6 | 13 | 626·8 |
| | | 45 | 14·38 | 47 | 539·7 | 48 | 609·6 |
| | | 50 | 13·44 | 52 | 539·3 | 53 | 607·6 |
| 12 | 13 | 0 | 12·13 | 2 | 535·8 | 3 | 606·0 |
| | | 10 | 10·43 | 12 | 532·9 | 13 | 606·6 |
| | * | 30 | 11·57 | 32 | 530·3 | 33 | 609·5 |
| 12 | 14 | 0 | 13·77 | 2 | 530·7 | 3 | 616·1 |
| 13 | 8 | 0 | 25 08·75 | 2 | 532·4 | 3 | 622·8 |
| | | 10 | 05·94 | 12 | 538·8 | 13 | 622·9 |
| 13 | 9 | 20 | 08·25 | 22 | 535·1 | 23 | 625·8 |
| 13 | 10* | 0 | 12·43 | 2 | 535·5 | 3 | 621·9 |
| 15 | 15 | 0 | 25 08·45 | 2 | 533·0 | 3 | 601·7 |
| | | 10 | 09·08 | 12 | 532·5 | 13 | 595·9 |
| | | 15 | 09·87 | 17 | 533·7 | 18 | 606·0 |
| 15 | 16 | 0 | 14·48 | 2 | 541·3 | 3 | 602·2 |
| 15 | 21 | 0 | 21·46 | 2 | 519·6 | 3 | 613·3 |
| | | 10 | 24·23 | 12 | 519·5 | 13 | 613·6 |
| | | 15 | 24·45 | 17 | 518·7 | 18 | 609·9 |
| | | 20 | 26·84 | 22 | 524·1 | 23 | 606·4 |
| | | 25 | 29·14 | 27 | 517·3 | 28 | 605·7 |
| | | 30 | 27·62 | 32 | 517·4 | 33 | 604·6 |
| | | 35 | 29·32 | 37 | 523·1 | 38 | 599·7 |
| | | 40 | 32·32 | 42 | 530·3 | 43 | 594·3 |
| | | 45 | 30·58 | 47 | 529·0 | 48 | 589·9 |
| | | 50 | 30·60 | 52 | 530·9 | 53 | 586·0 |
| | | 55 | 28·72 | 57 | 539·7 | | |
| 15 | 22 | 0 | 29·41 | 2 | 540·5 | 3 | 578·2 |

| Gött. Mean Time. | | Declination. | |
|---|---|---|---|
| d. | h. | Min. | ° ′ |
| 15 | 22 | 5 | 25 27·51 |
| | | 10 | 26·40 |
| | | 20 | 25·00 |
| | | 30 | 25·74 |
| | | 45 | 22·60 |
| 15 | 23 | 0 | 21·43 |
| | | 15 | 21·53 |
| 16 | 0 | 0 | 30·60 |
| | | 7 | 31·58 |
| | | 10 | 32·86 |
| | | 15 | 31·52 |
| | | 20 | 32·59 |
| | | 25 | 26·45 |
| | | 30 | 27·91 |
| | | 35 | 32·71 |
| | | 40 | 36·49 |
| | | 45 | 36·94 |
| | | 50 | 38·17 |
| | | 55 | 37·65 |
| 16 | 1 | 0 | 37·50 |
| | | 5 | 34·98 |
| | | 10 | 31·79 |
| | | 15 | 25·53 |
| | | 20 | 20·53 |
| | | 25 | 23·99 |
| | | 30 | 27·41 |
| | | 35 | 28·58 |
| | | 40 | 30·84 |
| | | 45 | 38·44 |
| | | 46 | 39·66 |
| | | 47 | 39·93 |
| | | 48 | 40·19 |
| | | 49 | 38·72 |
| | | 50 | 36·83 |
| | | 52 | 29·70 |
| | | 54 | 28·99 |
| | | 55 | 29·26 |
| 16 | 2 | 0 | 28·47 |
| | | 5 | 20·22 |
| | | 10 | 22·11 |
| | | 15 | 21·73 |
| | | 20 | 21·36 |
| | | 25 | 25·54 |
| | | 30 | 21·63 |
| | | 40 | 25·96 |
| | | 43 | 24·42 |

BIFILAR. $k$=0·000140. BALANCE. $k$=0·0000085.

Nov. 12d 4h—5h 0m. Magnet with short scale used in the declinometer.
Nov. 16d 1h 30m. Clock 6s fast; set right. Nov. 16d 1h 47m 50s. The declination was 25° 40′·26.
* See notes on the Aurora Borealis, *after* the *Extra Observations of Magnetometers.*

| Bifilar Corrected. | | Balance Corrected. | | Gött. Mean Time. | | Declination. | | | Bifilar Corrected. | | Balance Corrected. | | Gött. Mean Time. | | Declination. | | | Bifilar Corrected. | | Balance Corrected. | |
|---|---|---|---|---|---|---|---|---|---|---|---|---|---|---|---|---|---|---|---|---|---|
| Min. | Sc. Div. | Min. | Mic. Div. | d. | h. | Min. | ° | ′ | Min. | Sc. Div. | Min. | Mic. Div. | d. | h. | Min. | ° | ′ | Min. | Sc. Div. | Min. | Mic. Div. |
| 7 | 533·2 | | | 16 | 2 | 45 | 25 | 23·34 | 47 | 549·4 | 48 | 754·5 | 16 | 4 | | | | 11 | 553·0 | 11 | 1034·3 |
| 12 | 532·1 | 13 | 578·6 | | | | | | 49 | 540·3 | | | | | 12 | 25 | 20·05 | 12 | 545·4 | | |
| 22 | 535·3 | | | | | 50 | | 21·61 | 51 | 535·5 | | | | | | | | 13 | 535·8 | 13 | 1019·4 |
| 32 | 535·4 | 33 | 580·9 | | | | | | 52 | 538·5 | | | | | 14 | | 16·15 | 14 | 531·3 | | |
| 47 | 528·3 | 48 | 588·0 | | | | | | 54 | 539·0 | 54 | 754·8 | | | 15 | | 17·39 | 15 | 534·0 | 15 | 997·2 |
| 2 | 521·8 | 3 | 596·8 | | | 55 | | 23·27 | 57 | 542·1 | 58 | 754·9 | | | 16 | | 20·79 | 16 | 536·5 | | |
| 17 | 520·6 | 18 | 599·0 | 16 | 3 | 0 | | 22·94 | 2 | 535·4 | 3 | 760·6 | | | 17 | | 24·35 | 17 | 536·1 | 17 | 980·0 |
| 2 | 523·6 | 3 | 619·3 | | | 5 | | 24·22 | 7 | 550·6 | 8 | 783·4 | | | 18 | | 26·40 | 18 | 535·2 | | |
| 8 | 529·4 | 9 | 626·8 | | | | | | 9 | 560·4 | | | | | 19 | | 25·93 | 19 | 536·3 | 19 | 986·6 |
| 12 | 526·1 | 13 | 639·2 | | | 10 | | 23·98 | 10 | 556·6 | | | | | 20 | | 25·06 | 20 | 534·3 | 20 | 989·8 |
| 14 | 522·8 | | | | | | | | 11 | 550·2 | 11 | 848·7 | | | | | | 21 | 527·5 | 21 | 993·1 |
| 17 | 525·7 | 18 | 653·1 | | | | | | 12 | 554·9 | | | | | 22 | | 19·64 | 22 | 520·7 | 22 | 991·7 |
| 19 | 524·4 | | | | | | | | 13 | 557·3 | 13 | 886·3 | | | 23 | | 16·72 | 23 | 523·5 | 23 | 979·7 |
| 22 | 524·3 | 23 | 671·7 | | | 14 | | 13·93 | 14 | 555·4 | 14 | 908·1 | | | 24 | | 17·42 | 24 | 529·8 | 24 | 962·9 |
| 26 | 507·5 | | | | | | | | 15 | 554·7 | | | | | 25 | | 21·01 | 25 | 536·8 | 25 | 948·1 |
| 27 | 509·7 | 28 | 670·7 | | | 16 | | 06·39 | 16 | 562·8 | 16 | 949·4 | | | | | | 26 | 542·6 | 26 | 939·9 |
| 28 | 514·6 | | | | | | | | 17 | 565·0 | 17 | 965·0 | | | 27 | | 30·98 | 27 | 542·0 | 27 | 940·6 |
| 32 | 519·5 | 33 | 669·0 | | | 18 | | 05·72 | 18 | 570·9 | | | | | 28 | | 31·34 | 28 | 536·3 | 28 | 952·9 |
| 37 | 522·0 | 38 | 673·6 | | | 19 | 25 | 05·62 | 19 | 565·7 | 19 | 981·5 | | | | | | 29 | 527·8 | 29 | 976·2 |
| 42 | 539·0 | 43 | 678·5 | | | 20 | 24 | 57·31 | 20 | 559·8 | | | | | 30 | | 18·63 | 30 | 526·7 | 30 | 982·6 |
| 47 | 544·0 | 48 | 694·7 | | | 21 | 24 | 56·50 | 21 | 560·4 | 21 | 973·3 | | | 31 | | 16·08 | 31 | 527·4 | 31 | 972·8 |
| 52 | 540·3 | 53 | 713·2 | | | 22 | 24 | 57·75 | 22 | 565·2 | | | | | 32 | | 15·81 | 32 | 530·7 | 32 | 968·3 |
| 57 | 545·0 | 58 | 748·9 | | | 23 | 25 | 05·45 | 23 | 569·4 | 23 | 946·1 | | | 33 | | 18·37 | 33 | 527·7 | 33 | 953·9 |
| 2 | 548·0 | 3 | 798·1 | | | 24 | | 07·57 | 24 | 567·9 | | | | | 34 | | 20·05 | 34 | 522·6 | 34 | 947·5 |
| 7 | 537·1 | 8 | 798·7 | | | 25 | | 11·37 | 25 | 558·7 | 25 | 932·0 | | | 35 | | 20·85 | 35 | 520·9 | 35 | 939·9 |
| 12 | 514·0 | 13 | 800·6 | | | 26 | | 11·69 | 26 | 557·7 | | | | | | | | 36 | 520·0 | 36 | 935·3 |
| 17 | 509·3 | 18 | 780·2 | | | 27 | | 11·88 | 27 | 556·3 | 28 | 940·3 | | | 37 | | 21·53 | 37 | 519·7 | 37 | 932·9 |
| 22 | 519·7 | 23 | 755·7 | | | | | | 29 | 550·2 | | | | | | | | 38 | 522·1 | 38 | 929·4 |
| 27 | 522·2 | 28 | 740·2 | | | 30 | | 08·05 | 31 | 538·2 | 31 | 946·8 | | | | | | 39 | 524·1 | 39 | 931·4 |
| 32 | 520·8 | 33 | 736·4 | | | 32 | | 00·33 | 32 | 533·7 | | | | | 40 | | 20·99 | 40 | 527·2 | 40 | 931·9 |
| 37 | 526·9 | 38 | 726·8 | | | | | | 33 | 531·8 | 33 | 936·9 | | | | | | 41 | 529·9 | 41 | 933·5 |
| 42 | 535·0 | 43 | 726·1 | | | | | | 34 | 529·1 | | | | | 42 | | 21·46 | 42 | 535·2 | 42 | 933·7 |
| | | | | | | 35 | | 06·32 | 35 | 526·8 | | | | | | | | 43 | 537·9 | 43 | 931·6 |
| | | | | | | | | | 36 | 527·7 | | | | | | | | 44 | 543·8 | 44 | 933·8 |
| 47 | 525·2 | | | | | 37 | | 04·37 | 37 | 526·5 | 37 | 905·9 | | | 45 | | 22·84 | 45 | 551·3 | 45 | 940·4 |
| | | 48 | 745·8 | | | 38 | | 03·84 | 38 | 527·6 | | | | | | | | 46 | 565·6 | 46 | 944·0 |
| | | | | | | | | | 39 | 531·7 | 39 | 888·8 | | | | | | 47 | 563·1 | 47 | 952·0 |
| | | | | | | 40 | | 07·07 | 40 | 535·9 | 41 | 875·4 | | | | | | 48 | 569·3 | 48 | 963·9 |
| 52 | 523·8 | | | | | | | | 42 | 537·5 | 43 | 869·6 | | | | | | 49 | 577·6 | 49 | 979·5 |
| | | 53 | 756·4 | | | 44 | | 14·38 | | | | | | | 50 | | 28·04 | 50 | 584·8 | 50 | 998·0 |
| | | | | | | 45 | | 16·65 | 45 | 545·8 | | | | | | | | 51 | 593·3 | 51 | 1019·9 |
| 57 | 531·3 | 58 | 767·2 | | | 47 | | 20·15 | 47 | 547·1 | 48 | 869·9 | | | 52 | | 30·42 | 52 | 603·0 | 52 | 1039·3 |
| 2 | 521·4 | 3 | 780·3 | | | | | | 49 | 552·0 | | | | | 53 | | 33·87 | 53 | 612·2 | 53 | 1069·1 |
| 7 | 528·9 | 8 | 765·8 | | | 50 | | 25·29 | 51 | 557·9 | | | | | 54 | | 34·24 | 54 | 610·8 | 54 | 1085·2 |
| 12 | 532·3 | 13 | 761·4 | | | 52 | | 25·22 | 52 | 557·1 | | | | | 55 | | 35·65 | 55 | 627·5 | 55 | 1108·7 |
| 17 | 534·3 | 18 | 752·8 | | | | | | 53 | 554·7 | 53 | 930·9 | | | 56 | | 29·88 | 56 | 639·0 | 56 | 1130·9 |
| 22 | 540·1 | 23 | 743·9 | | | 55 | | 25·33 | 54½ | 572·5 | | | | | 57 | | 26·57 | 57 | 641·8 | 57 | 1129·4 |
| 27 | 522·7 | 28 | 746·2 | | | | | | 56 | 554·2 | 56 | 984·5 | | | 58 | | 28·32 | 58 | 637·3 | 58 | 1090·0 |
| 29 | 533·6 | | | | | 57 | | 19·44 | 57 | 551·0 | | | | | | | | 59 | 631·0 | 59 | 1103·7 |
| 31 | 534·3 | | | | | | | | 58 | 549·8 | 58 | 972·4 | 16 | 5 | 0 | | 08·28 | 0 | 605·8 | 0 | 1098·5 |
| 32 | 547·8 | 33 | 738·3 | | | | | | 59 | 549·2 | | | | | 1 | | 02·62 | 1 | 557·0 | 1 | 1093·5 |
| 34 | 558·9 | | | 16 | 4 | 0 | | 22·10 | 0 | 546·7 | | | | | 2 | | 02·19 | 2 | 533·2 | 2 | 1075·9 |
| 36 | 556·1 | | | | | | | | 1 | 545·6 | 1 | 971·3 | | | 3 | | 04·82 | 3 | 516·3 | 3 | 1059·1 |
| 37 | 558·6 | | | | | | | | 2 | 543·3 | | | | | 4 | | 07·24 | 4 | 520·9 | 4 | 1039·5 |
| 38 | 561·0 | 38 | 738·4 | | | | | | 3 | 542·6 | 3 | 971·2 | | | 5 | | 09·96 | 5 | 522·9 | 5 | 1021·9 |
| 39 | 550·3 | | | | | 5 | | 22·87 | 5 | 551·0 | | | | | 6 | | 11·88 | 6 | 526·7 | 6 | 1006·1 |
| 40 | 543·8 | | | | | | | | 6 | 554·9 | 6 | 986·1 | | | 7 | | 14·64 | 7 | 529·0 | 7 | 996·1 |
| 41 | 551·4 | | | | | 7 | | 21·46 | 7 | 559·3 | | | | | 8 | | 18·61 | 8 | 535·7 | 8 | 990·2 |
| 42 | 551·5 | 42 | 750·7 | | | | | | 8 | 568·4 | | | | | 9 | | 20·89 | 9 | 536·7 | 9 | 993·3 |
| 43 | 550·8 | | | | | | | | 9 | 568·6 | 9 | 989·9 | | | 10 | | 23·81 | 10 | 538·7 | 10 | 998·2 |
| 44 | 552·0 | 44 | 752·4 | | | 10 | | 27·24 | 10 | 561·5 | | | | | 11 | | 25·22 | 11 | 539·6 | 11 | 1010·3 |

BIFILAR. $k=0·000140$. BALANCE. $k=0·0000085$.

Nov. 16d 2h 30m. The bifilar reading had diminished a little since 29m.

Nov. 16d 3h 54m 30s. The bifilar attained its greatest reading at 54m 30s, and immediately began to diminish. 4h 57m + The bifilar readings suddenly began to diminish at 57m 35s, and continued to diminish till 5h 3m 0s.

| Gött. Mean Time. | | Declination. | | Bifilar Corrected. | | Balance Corrected. | | Gött. Mean Time. | | Declination. | | Bifilar Corrected. | | Balance Corrected. | | Gött. Mean Time. | | Declination. | |
|---|---|---|---|---|---|---|---|---|---|---|---|---|---|---|---|---|---|---|---|
| d. | h. | Min. | ° ′ | Min. | Sc. Div. | Min. | Mic. Div. | d. | h. | Min. | ° ′ | Min. | Sc. Div. | Min. | Mic. Div. | d. | h. | Min. | ° ′ |
| 16 | 5 | 12 | 25 24·13 | 12 | 540·9 | 12 | 1024·4 | 16 | 6 | 13 | 25 06·46 | 13 | 609·8 | | | 16 | 7 | 14 | 25 09·93 |
| | | 13 | 20·85 | 13 | 544·4 | 13 | 1037·6 | | | 14 | 06·32 | 14 | 629·5 | | | | | | |
| | | 14 | 17·12 | 14 | 549·8 | 14 | 1049·1 | | | 15 | 04·10 | 15 | 645·3 | 15 | 1183·5 | | | 16 | 12·78 |
| | | | | 15 | 554·2 | 15 | 1055·7 | | | 16 | 04·51 | 16 | 649·8 | 16 | 1175·2 | | | | |
| | | | | 16 | 555·0 | 16 | 1062·6 | | | 17 | 04·79 | 17 | 660·8 | 17 | 1171·8 | | | 18 | 11·41 |
| | | 17 | 14·70 | 17 | 558·8 | 17 | 1070·5 | | | 18 | 04·96 | 18 | 681·8 | 18 | 1127·7 | | | | |
| | | | | 18 | 563·0 | 18 | 1080·3 | | | 19 | 05·65 | | | 19 | 1103·3 | | | 20 | 25 06·36 |
| | | 19 | 14·03 | 19 | 562·7 | 19 | 1093·3 | | | 20 | 11·05 | | | | | | | | |
| | | 20 | 10·47 | 20 | 564·1 | 20 | 1100·0 | | | 21 | 11·03 | 21 | 658·7 | 21 | 1075·1 | | | 22 | 24 56·23 |
| | | 21 | 08·55 | 21 | 564·3 | 21 | 1095·9 | | | 22 | 10·83 | 22 | 658·8 | 22 | 1090·5 | | | | |
| | | 22 | 09·96 | 22 | 564·5 | 22 | 1084·8 | | | 23 | 11·07 | 23 | 649·6 | 23 | 1104·5 | | | 24 | 51·16 |
| | | | | 23 | 568·8 | 23 | 1077·4 | | | 24 | 13·74 | 24 | 624·4 | 24 | 1102·0 | | | | |
| | | | | 24 | 568·6 | 24 | 1076·3 | | | 25 | 13·79 | 25 | 613·7 | 25 | 1110·0 | | | 26 | 49·95 |
| | | 25 | 15·17 | 25 | 579·1 | 25 | 1067·1 | | | 26 | 12·18 | 26¼ | 574·6 | 26 | 1120·7 | | | | |
| | | | | 26 | 579·8 | 26 | 1058·4 | | | 27 | 12·13 | 27 | 559·4 | 27 | 1124·5 | | | 28 | 50·31 |
| | | 27 | 14·06 | 27 | 575·9 | 27 | 1058·5 | | | 28 | 11·51 | 28 | 539·0 | 28 | 1115·4 | | | 30 | 52·67 |
| | | | | 28 | 569·1 | 28 | 1063·6 | | | 29 | 10·03 | 29 | 545·8 | 29 | 1098·0 | | | | |
| | | 29 | 12·28 | 29 | 566·0 | 29 | 1069·7 | | | 30 | 08·99 | 30 | 563·4 | 30 | 1105·1 | | | 32 | 24 55·49 |
| | | 30 | 09·82 | 30 | 566·8 | 30 | 1076·3 | | | 31 | 05·38 | 31 | 586·8 | 31 | 1122·7 | | | 34 | 25 00·04 |
| | | | | 31 | 561·0 | 31 | 1074·9 | | | 32 | 02·48 | 32 | 612·7 | 32 | 1139·6 | | | 36 | 06·73 |
| | | 32 | 08·50 | 32 | 559·7 | 32 | 1052·5 | | | 33 | 04·91 | 33 | 663·1 | 33 | 1166·8 | | | 38 | 16·35 |
| | | | | 33 | 556·4 | 33 | 1043·1 | | | 34 | 02·62 | 34 | 655·0 | 34 | 1196·5 | | | | |
| | | 34 | 10·03 | 34 | 547·4 | 34 | 1033·2 | | | 35 | 01·93 | 35 | 686·8 | 35 | 1207·2 | | | 40 | 33·33 |
| | | 35 | 11·48 | 35 | 540·4 | 35 | 1023·3 | | | 36 | 25 01·07 | 36 | 723·2 | 36 | 1214·6 | | | | |
| | | | | 36 | 539·4 | 36 | 1007·3 | | | 37 | 24 58·32 | | | 37 | 1173·5 | | | 42 | 34·98 |
| | | 37 | 12·15 | 37 | 541·2 | 37 | 990·3 | | | 38 | 24 58·65 | 38 | 739·8 | 38 | 1134·5 | | | | |
| | | | | 38 | 543·4 | 38 | 993·7 | | | 39 | 25 03·23 | 39 | 734·4 | 39 | 1069·1 | | | 44 | 24·25 |
| | | 39 | 13·12 | 39 | 544·1 | 39 | 985·5 | | | 40 | 24 52·10 | 40 | 716·2 | 40 | 1026·5 | | | | |
| | | 40 | 14·46 | 40 | 551·3 | | | | | 41 | 24 58·15 | 41 | 700·9 | 41 | 952·6 | | | 46 | 15·41 |
| | | 41 | 16·21 | 41 | 552·4 | | | | | 42 | 25 06·73 | 42 | 650·3 | 42 | 883·7 | | | | |
| | | | | 42 | 555·4 | 42 | 981·7 | | | 43 | 25 04·84 | 43 | 608·0 | 43 | 862·7 | | | 48 | 09·84 |
| | | 43 | 17·60 | 43 | 554·9 | | | | | 44 | 24 51·09 | 44 | 562·3 | 44 | 836·8 | | | 49 | 03·20 |
| | | | | 44 | 556·2 | 44 | 974·8 | | | 45 | 24 54·03 | 45 | 503·8 | 45 | 757·8 | | | 50 | 02·39 |
| | | 45 | 19·76 | 45 | 558·9 | | | | | 46 | 25 01·27 | | | 46 | 736·8 | | | | |
| | | | | 46 | 560·8 | 46 | 972·5 | | | 47 | 04·98 | 47 | 469·2 | 47 | 724·4 | | | 52 | 02·19 |
| | | 47 | 23·04 | 47 | 565·9 | | | | | 48 | 05·72 | 48 | 455·3 | 48 | 734·0 | | | | |
| | | | | 48 | 566·2 | 48 | 986·8 | | | 49 | 04·71 | 49 | 454·4 | 49 | 748·6 | | | 54 | 00·44 |
| | | 49 | 26·34 | 49 | 566·7 | | | | | 50 | 25 00·75 | 50 | 460·8 | 50 | 760·0 | | | | |
| | | | | 50 | 563·7 | 50 | 1002·5 | | | 51 | 24 57·49 | 51 | 469·2 | 51 | 771·5 | | | 56 | 00·13 |
| | | 51 | 27·95 | 51 | 559·0 | | | | | 52 | 51·12 | 52 | 479·7 | 52 | 774·1 | | | | |
| | | | | 52 | 552·0 | 52 | 1012·8 | | | 53 | 44·53 | 53 | 490·5 | 53 | 770·3 | | | 58 | 25 00·20 |
| | | | | 53 | 555·5 | | | | | 54 | 42·64 | 54 | 496·6 | 54 | 754·7 | | | | |
| | | 54 | 23·48 | 54 | 563·6 | 54 | 1029·6 | | | 55 | 38·14 | 55 | 491·6 | 55 | 754·0 | 16 | 8 | 0 | 24 59·03 |
| | | | | 55 | 566·3 | | | | | 56 | 35·83 | 56 | 487·0 | 56 | 758·2 | | | | |
| | | | | 56 | 570·9 | 56 | 1051·4 | | | 57 | 34·98 | 57 | 488·6 | 57 | 755·3 | | | 2 | 25 04·46 |
| | | 57 | 20·05 | 57 | 574·4 | | | | | 58 | 33·77 | 58 | 494·7 | 58 | 754·3 | | | | |
| | | 58 | 18·20 | 58 | 582·5 | | | | | 59 | 31·70 | 59 | 506·3 | 59 | 751·3 | | | 4 | 10·70 |
| | | | | 59 | 585·0 | 59 | 1092·0 | 16 | 7 | 0 | 33·70 | 0 | 516·0 | 0 | 745·2 | | | | |
| 16 | 6 | 0 | 14·57 | 0 | 584·6 | | | | | 1 | 36·12 | 1 | 518·3 | 1 | 731·9 | | | 6 | 14·04 |
| | | | | 1 | 586·4 | 1 | 1110·5 | | | 2 | 40·49 | 2 | 518·1 | 2 | 714·2 | | | | |
| | | | | 2 | 590·6 | 2 | 1112·5 | | | | | 3 | 517·4 | 3 | 697·5 | | | 8 | 14·73 |
| | | 3 | 09·08 | 3 | 603·1 | | | | | 4 | 43·96 | 4 | 520·3 | 4 | 681·5 | | | | |
| | | | | 4 | 612·8 | 4 | 1123·2 | | | 5 | 48·23 | 5 | 523·3 | 5 | 663·6 | | | 10 | 15·85 |
| | | 5 | 15·27 | 5 | 606·0 | | | | | | | 6 | 524·3 | 6 | 647·3 | | | | |
| | | | | 6 | 585·0 | 6 | 1113·6 | | | 7 | 24 57·14 | 7 | 525·1 | 7 | 627·0 | | | 12 | 12·78 |
| | | 7 | 20·15 | 7 | 566·5 | | | | | 8 | 25 05·05 | 8 | 526·8 | 8 | 622·6 | | | | |
| | | | | 8 | 557·6 | 8 | 1101·3 | | | | | 9 | 525·5 | 9 | 635·0 | | | | |
| | | 9 | 15·94 | 9 | 567·0 | | | | | 10 | 08·52 | 10 | 521·9 | 10 | 649·2 | | | | |
| | | | | 10 | 576·5 | 10 | 1111·0 | | | 11 | 06·53 | 11 | 516·0 | | | | | 16 | 07·74 |
| | | 11 | 11·74 | 11 | 587·0 | | | | | 12 | 09·19 | 12 | 510·5 | 12 | 656·0 | | | | |
| | | | | 12 | 593·9 | 12 | 1126·5 | | | | | 13 | 504·7 | | | | | 18 | 06·79 |

BIFILAR. $k=0{\cdot}000140$. BALANCE. $k=0{\cdot}0000085$.

Nov. 16$^d$ 6$^h$ 20$^m$. The torsion circle reading of the bifilar was changed from 110° 16′ to 109° 8′. 6$^h$ 37$^m$, 107° 33′. 6$^h$ 46$^m$, 109° 2′·5. All the observations have been reduced to the original circle reading. (See *Introduction*.)

| Bifilar Corrected. | | Balance Corrected. | | Gött. Mean Time. | | Declination. | | Bifilar Corrected. | | Balance Corrected. | | Gött. Mean Time. | | Declination. | | Bifilar Corrected. | | Balance Corrected. | |
|---|---|---|---|---|---|---|---|---|---|---|---|---|---|---|---|---|---|---|---|
| Min. | Sc. Div. | Min. | Mic. Div. | d. | h. | Min. | ° ′ | Min. | Sc. Div. | Min. | Mic. Div. | d. | h. | Min. | ° ′ | Min. | Sc. Div. | Min. | Mic. Div. |
| 14 | 500·4 | | | 16 | 8 | | | 19 | 551·2 | 19 | 872·6 | 16 | 9 | | | 37 | 507·4 | 37 | 572·4 |
| 15 | 498·9 | 15 | 664·6 | | | | | 20 | 549·5 | 20 | 870·0 | | | 38 | 25 04·04 | 38 | 508·6 | | |
| 16 | 495·1 | | | | | | | | | 21 | 865·7 | | | | | 39 | 510·1 | 39 | 571·9 |
| 17 | 497·0 | 17 | 706·1 | | | 22 | 25 06·39 | 22 | 552·0 | 22 | 866·3 | | | 40 | 01·95 | 40 | 512·3 | | |
| 18 | 497·1 | | | | | | | 23 | 553·5 | 23 | 865·1 | | | | | 41 | 514·1 | 41 | 566·9 |
| 19 | 500·3 | 19 | 739·6 | | | | | 24 | 552·3 | 24 | 863·4 | | | 42 | 25 00·57 | 42 | 514·6 | | |
| 20 | 503·6 | | | | | 26 | 06·16 | 27 | 543·7 | 28 | 843·0 | | | | | 43 | 515·6 | 43 | 565·5 |
| 21 | 503·7 | 21 | 774·2 | | | 30 | 07·94 | 32 | 539·3 | 33 | 819·5 | | | 44 | 24 59·32 | 45 | 517·3 | 45 | 564·9 |
| 22 | 500·4 | | | | | 35 | 12·85 | 37 | 541·3 | 38 | 834·6 | | | 47 | 57·24 | 47 | 515·5 | 48 | 556·9 |
| 23 | 497·7 | 23 | 779·7 | | | 40 | 25 10·56 | 42 | 530·2 | 43 | 796·2 | | | 49 | 57·22 | | | 49 | 554·8 |
| 24 | 497·4 | | | | | 45 | 24 59·93 | | | 45 | 784·4 | | | 50 | 57·34 | 50 | 518·0 | 50 | 551·6 |
| 25 | 497·7 | 25 | 762·7 | | | | | 46 | 535·9 | 46 | 783·0 | | | 52 | 56·65 | 52 | 519·9 | 52 | 549·8 |
| 26 | 496·6 | | | | | 47 | 25 02·28 | 47 | 535·3 | 47 | 779·4 | | | 55 | 57·31 | 55 | 522·1 | 55 | 540·3 |
| 27 | 496·6 | 27 | 746·2 | | | 48 | 24 58·15 | 48 | 545·2 | 48 | 783·8 | | | | | | | 56 | 519·8 |
| 28 | 498·1 | 29 | 737·5 | | | | | 49 | 559·8 | 49 | 790·0 | | | 57 | 24 59·66 | 57 | 521·4 | 57 | 515·7 |
| 30 | 506·2 | | | | | 50 | 46·75 | 50 | 576·4 | 50 | 786·0 | | | | | 58 | 520·3 | 58 | 508·3 |
| | | 31 | 727·5 | | | 51 | 38·55 | 51 | 579·2 | 51 | 746·5 | 16 | 10 | 0 | 25 00·53 | 0 | 517·3 | 0 | 510·0 |
| 32 | 508·9 | 33 | 716·4 | | | 52 | 51·93 | 52 | 557·3 | 52 | 683·0 | | | 2 | 01·07 | 2 | 510·3 | 2 | 505·6 |
| 34 | 521·2 | 34 | 716·9 | | | 53 | 55·68 | 53 | 533·0 | 53 | 663·4 | | | | | 3 | 507·2 | | |
| 36 | 527·2 | 36 | 724·3 | | | 54 | 55·22 | 54 | 525·5 | 54 | 667·3 | | | 4 | 04·48 | 4 | 505·0 | | |
| 38 | 520·9 | 38 | 710·3 | | | 55 | 50·16 | 55 | 527·6 | 55 | 663·7 | | | 5 | 04·37 | 5 | 500·5 | 5 | 505·2 |
| 39 | 514·0 | 39 | 700·2 | | | 56 | 50·92 | 56 | 524·8 | 56 | 663·2 | | | | | 6 | 496·9 | 6 | 517·0 |
| 40 | 502·5 | 40 | 697·0 | | | 57 | 44·76 | 57 | 522·5 | 57 | 660·4 | | | | | 7 | 495·4 | | |
| 41 | 494·9 | 41 | 712·1 | | | 58 | 42·61 | 58 | 524·3 | 58 | 654·7 | | | | | 8 | 492·2 | | |
| 42 | 492·5 | 42 | 744·3 | | | 59 | 41·00 | 59 | 525·4 | 59 | 642·6 | | | | | 9 | 490·9 | | |
| 43 | 491·2 | 43 | 777·4 | 16 | 9 | 0 | 40·91 | 0 | 529·7 | 0 | 631·3 | | | 10 | 04·17 | 10 | 486·3 | 10 | 518·7 |
| 44 | 496·5 | 44 | 795·9 | | | | | 1 | 531·4 | 1 | 616·8 | | | | | 11 | 485·0 | 11 | 520·1 |
| 45 | 502·0 | 45 | 805·0 | | | 2 | 44·44 | 2 | 535·1 | 2 | 605·8 | | | 12 | 05·89 | 12 | 481·9 | 12 | 518·3 |
| 46 | 508·0 | 46 | 834·7 | | | 3 | 46·31 | 3 | 535·8 | 3 | 599·4 | | | | | 13 | 480·3 | | |
| 47 | 510·6 | 47 | 849·5 | | | | | 4 | 534·7 | 4 | 599·2 | | | 14 | 06·86 | 14 | 476·8 | 14 | 513·8 |
| | | 48 | 857·2 | | | 5 | 45·87 | 5 | 538·6 | 5 | 601·6 | | | | | 15 | 474·6 | 15 | 513·8 |
| 49 | 518·0 | 49 | 863·1 | | | | | 6 | 547·4 | 6 | 607·3 | | | 16 | 09·35 | 16 | 470·8 | | |
| | | 50 | 860·6 | | | 7 | 46·21 | 7 | 551·4 | 7 | 605·2 | | | | | 17 | 469·9 | 17 | 512·8 |
| 51 | 527·6 | 51 | 859·5 | | | 8 | 50·92 | 8 | 551·3 | 8 | 602·1 | | | | | 18 | 467·7 | | |
| 52 | 532·6 | 52 | 861·1 | | | | | 9 | 548·6 | 9 | 602·9 | | | | | 19 | 471·1 | | |
| 53 | 534·6 | 53 | 864·6 | | | 10 | 48·47 | 10 | 547·8 | | | | | 20 | 14·73 | 20 | 474·0 | | |
| 54 | 538·3 | 54 | 867·0 | | | | | 11 | 546·7 | | | | | | | 21 | 477·7 | 21 | 496·7 |
| 55 | 543·6 | 55 | 867·3 | | | 12 | 57·04 | 12 | 543·3 | 12 | 597·3 | | | 22 | 18·94 | 22 | 478·6 | | |
| 56 | 543·9 | 56 | 861·7 | | | | | 13 | 540·1 | | | | | | | 23 | 472·6 | 23 | 470·3 |
| 57 | 539·4 | 57 | 849·8 | | | 14 | 24 59·06 | 14 | 535·7 | | | | | 24 | 23·21 | 24 | 465·7 | 24 | 453·8 |
| 58 | 530·4 | 58 | 837·7 | | | 16 | 25 03·54 | 15 | 530·8 | 16 | 589·6 | | | | | 25 | 457·9 | 25 | 434·8 |
| 59 | 528·3 | 59 | 825·4 | | | | | 17 | 521·7 | 17 | 587·9 | | | 26 | 26·30 | 26 | 451·9 | 26 | 417·3 |
| 0 | 532·4 | 0 | 813·5 | | | | | 18 | 519·9 | 18 | 584·3 | | | | | 27 | 451·3 | 27 | 400·9 |
| 1 | 534·8 | 1 | 798·9 | | | | | 19 | 517·2 | 19 | 585·3 | | | 28 | 29·06 | 28 | 449·6 | 28 | 388·3 |
| 2 | 531·9 | 2 | 786·7 | | | | | 20 | 514·6 | 20 | 601·9 | | | 29 | 29·76 | 29 | 446·7 | 29 | 380·9 |
| 3 | 530·0 | 3 | 774·2 | | | 21 | 06·59 | 21 | 510·3 | 21 | 598·1 | | | | | 30 | 441·9 | 30 | 371·6 |
| | | 4 | 769·8 | | | | | 22 | 509·7 | 22 | 593·8 | | | | | 31 | 437·6 | 31 | 363·2 |
| 5 | 527·8 | 5 | 769·8 | | | 23½ | 00·47 | 23 | 510·9 | 23 | 591·4 | | * | 32 | 27·51 | 32 | 436·5 | 32 | 353·3 |
| | | 6 | 778·4 | | | | | 24 | 512·8 | 24 | 587·3 | | | | | 33 | 434·0 | 33 | 347·8 |
| 7 | 527·8 | 7 | 784·1 | | | 25 | 00·60 | 25 | 517·3 | | | | | 34 | 24·08 | 34 | 432·5 | 34 | 339·9 |
| 8 | 527·7 | 8 | 789·7 | | | 26 | 01·41 | | | | | | | | | 35 | 427·2 | 35 | 335·2 |
| | | 9 | 796·0 | | | 27 | 02·50 | 27 | 526·1 | | | | | 36 | 24·82 | 36 | 432·0 | 36 | 328·8 |
| 10 | 528·1 | 10 | 802·5 | | | 28 | 04·04 | 28 | 527·4 | 28 | 583·8 | | | | | 37 | 433·2 | 37 | 325·8 |
| 11 | 536·1 | 11 | 813·0 | | | | | 29 | 527·2 | 29 | 578·0 | | | 38 | 27·61 | 38 | 432·3 | 38 | 321·0 |
| 12 | 540·8 | 12 | 826·1 | | | 30 | 06·63 | | | 30 | 574·3 | | | | | 39 | 425·1 | 39 | 318·1 |
| 13 | 544·8 | 13 | 836·0 | | | | | 31 | 521·3 | 31 | 572·4 | | | 40 | 28·20 | 40 | 430·1 | 40 | 318·1 |
| 14 | 552·3 | 14 | 848·1 | | | 32 | 10·33 | 32 | 516·1 | 32 | 570·5 | | | | | 41 | 433·1 | | |
| 15 | 555·3 | 15 | 860·2 | | | | | 33 | 509·4 | 33 | 570·5 | | | 42 | 27·24 | 42 | 428·6 | | |
| 16 | 554·0 | 16 | 866·1 | | | | | 34 | 506·3 | 34 | 567·0 | | | | | 43 | 416·3 | 43 | 333·8 |
| 17 | 553·9 | 17 | 870·4 | | | | | 35 | 506·4 | | | | | 44 | 25·09 | 44 | 419·7 | 44 | 338·8 |
| 18 | 553·2 | 18 | 872·5 | | | 36 | 06·76 | 36 | 507·0 | | | | | | | 45 | 421·7 | 45 | 342·3 |

BIFILAR. $k$=0·000140. BALANCE. $k$=0·0000085.

Nov. 16$^d$ 8$^h$ 50$^m$ + The bifilar reading attained a maximum at 50$^m$ 30$^s$, it then diminished till 54$^m$ 40$^s$, when it attained a minimum.

Nov. 16$^d$ 10$^h$ 43$^m$. The reading of the bifilar was least at 43$^m$ 25$^s$. At 58$^m$ 30$^s$ the bifilar reading, which had been steadily increasing, diminished for about 1$^m$, and then increased.

* See notes on the Aurora Borealis, *after* the *Extra Observations of Magnetometers.*

| Gött. Mean Time. | Declination. | | Bifilar Corrected. | | Balance Corrected. | |
|---|---|---|---|---|---|---|
| d. h. | Min. | ° ′ | Min. | Sc. Div. | Min. | Mic. Div. |
| 16 10 | 46 | 25 20·02 | 46 | 429·4 | 46 | 348·4 |
| | | | 47 | 434·6 | 47 | 353·3 |
| | 48 | 18·68 | 48 | 437·7 | | |
| | | | 49 | 434·3 | 49 | 365·8 |
| | 50 | 15·01 | 50 | 428·5 | | |
| | | | 51 | 418·1 | 51 | 368·1 |
| | 52 | 11·37 | 52 | 430·7 | | |
| | | | 53 | 444·2 | 53 | 382·6 |
| | 54 | 10·36 | 54 | 456·3 | 54 | 392·3 |
| | | | 55 | 469·1 | | |
| | 56 | 09·39 | 56 | 479·4 | 56 | 414·3 |
| | | | 57 | 488·5 | 57 | 428·1 |
| | 58 | 07·04 | 58 | 492·4 | 58 | 439·3 |
| | | | 59 | 483·0 | 59 | 454·8 |
| 16 11 | 0 | 02·69 | 0 | 487·8 | 0 | 464·9 |
| * | 1 | 25 00·27 | 1 | 494·1 | 1 | 478·3 |
| | 2 | 24 57·88 | 2 | 490·6 | 2 | 490·0 |
| | 3 | 56·10 | 3 | 498·1 | 3 | 496·4 |
| | 4 | 55·15 | 4 | 496·3 | 4 | 500·4 |
| | 5 | 52·87 | 5 | 500·2 | 5 | 502·4 |
| | 6 | 50·92 | 6 | 508·9 | 6 | 510·5 |
| | 7 | 48·83 | 7 | 519·3 | 7 | 513·1 |
| | 8 | 47·42 | 8 | 530·2 | 8 | 514·9 |
| | 9 | 47·76 | 9 | 541·8 | 9 | 515·8 |
| | 10 | 46·79 | 10 | 541·1 | 10 | 519·1 |
| | 11 | 45·20 | 11 | 541·1 | 11 | 519·1 |
| | 12 | 44·12 | 12 | 541·7 | | |
| | 13 | 43·96 | 13 | 543·6 | | |
| | | | 14 | 544·9 | 14 | 519·2 |
| | 15 | 44·73 | 15 | 547·0 | 15 | 514·7 |
| | 16 | 44·76 | 16 | 550·9 | 16 | 510·8 |
| | 17 | 46·55 | 17 | 554·6 | 17 | 506·6 |
| | 18 | 47·56 | 18 | 559·8 | 18 | 504·3 |
| | 19 | 48·77 | 19 | 559·4 | 19 | 500·9 |
| | 20 | 50·51 | 20 | 558·5 | 20 | 495·4 |
| | 21 | 53·54 | 21 | 558·1 | 21 | 491·6 |
| | 22 | 55·70 | 22 | 557·5 | 22 | 487·4 |
| | 24 | 24 59·66 | 24 | 551·8 | 24 | 481·5 |
| | 26 | 25 02·35 | 26 | 544·1 | 26 | 474·8 |
| | 28 | 03·70 | 28 | 536·1 | 28 | 469·4 |
| | 30 | 06·66 | 30 | 533·2 | 30 | 462·1 |
| | 32 | 08·75 | 32 | 531·9 | 32 | 452·6 |
| | 34 | 11·30 | 34 | 530·3 | 34 | 443·2 |
| | 36 | 14·67 | 36 | 526·8 | 36 | 440·8 |
| | 38 | 16·41 | 38 | 521·2 | 38 | 441·8 |
| | | | 40 | 520·9 | 40 | 443·4 |
| | 42 | 17·15 | 42 | 519·3 | 42 | 445·4 |
| | 44 | 16·77 | 44 | 515·7 | 44 | 447·0 |
| | 46 | 15·47 | 46 | 516·1 | 46 | 451·5 |
| | 48 | 15·74 | 48 | 515·8 | 48 | 452·5 |
| | 50 | 14·92 | 50 | 514·1 | 50 | 454·2 |
| | 52 | 13·52 | 52 | 514·4 | 52 | 456·4 |
| | 54 | 12·72 | 54 | 510·9 | 54 | 454·1 |
| | 56 | 12·62 | 56 | 507·6 | 56 | 452·8 |
| | 58 | 11·37 | 58 | 507·2 | 58 | 455·8 |
| 16 12 | 0 | 11·28 | 0 | 504·6 | 0 | 455·5 |
| | 2 | 10·40 | 2 | 502·1 | 2 | 456·4 |
| | 4 | 09·22 | 4 | 497·8 | | |
| | 6 | 08·75 | 6 | 494·6 | 6 | 454·0 |
| | 8 | 08·34 | 8 | 489·6 | 8 | 453·8 |
| | 10 | 06·73 | 10 | 488·4 | 10 | 452·4 |

| Gött. Mean Time. | Declination. | | Bifilar Corrected. | | Balance Corrected. | |
|---|---|---|---|---|---|---|
| d. h. | Min. | ° ′ | Min. | Sc. Div. | Min. | Mic. Div. |
| 16 12 | 12 | 25 05·69 | 12 | 487·3 | 12 | 455·1 |
| | 14 | 04·21 | 14 | 488·7 | 14 | 456·7 |
| | 16 | 04·10 | 16 | 490·0 | 16 | 459·8 |
| | 18 | 04·04 | 18 | 490·7 | 18 | 464·5 |
| | | | 20 | 493·0 | | |
| | 22 | 03·94 | 22 | 492·7 | 22 | 475·5 |
| | 24 | 03·09 | 24 | 488·6 | 24 | 475·9 |
| | 26 | 01·85 | 26 | 489·9 | 26 | 479·2 |
| | 28 | 25 00·94 | 28 | 491·6 | 28 | 484·7 |
| | 30 | 24 58·15 | 30 | 498·5 | 30 | 490·1 |
| | 32 | 57·91 | 32 | 493·2 | 32 | 491·9 |
| | 35 | 57·34 | 35 | 503·8 | 35 | 497·4 |
| | 36 | 57·34 | 36 | 504·4 | | |
| | 38 | 57·64 | 38 | 503·3 | 38 | 494·7 |
| | 40 | 24 59·03 | 40 | 506·0 | 40 | 492·0 |
| | 42 | 25 00·17 | 42 | 504·1 | 42 | 491·1 |
| | 44 | 01·14 | 44 | 503·0 | 44 | 489·5 |
| | 46 | 01·41 | 46 | 503·4 | 46 | 489·3 |
| 16 12 | 48 | 03·97 | 48 | 503·1 | 48 | 486·1 |
| 17 1 | 30 | 25 21·50 | 31 | 527·5 | 32 | 676·3 |
| | | | 42 | 516·0 | 43 | 696·1 |
| | 45 | 18·77 | 47 | 514·8 | 48 | 698·6 |
| 17 2 | 45 | 17·09 | 47 | 512·8 | | |
| 17 4 | 10 | 00·01 | 12 | 510·9 | 13 | 764·5 |
| | 40 | 03·38 | 41 | 543·4 | 42 | 724·2 |
| 17 10 | 25 | 07·40 | 27 | 566·8 | 28 | 587·6 |
| | 33 | 18·16 | 34 | 539·0 | | |
| 17 14 | 0 | 16·21 | 2 | 529·9 | 3 | 599·5 |
| | 20 | 15·51 | 22 | 528·1 | 23 | 623·0 |
| 17 15 | 0 | 15·71 | 2 | 528·8 | 3 | 611·9 |
| 18 0 | 0 | 25 17·76 | 2 | 516·0 | 3 | 655·7 |
| | 15 | 19·14 | 17 | 528·3 | 18 | 652·6 |
| | 20 | 18·81 | 22 | 526·5 | 23 | 655·8 |
| 18 1 | 0 | 19·44 | 2 | 534·5 | 3 | 648·7 |
| 18 8 | 0 | 25 06·39 | 2 | 545·7 | 3 | 631·7 |
| | 10 | 08·21 | 12 | 544·3 | 13 | 631·8 |
| | 20 | 11·98 | 22 | 541·3 | | |
| | 30 | 25 13·22 | 32 | 538·4 | 33 | 624·6 |
| | | | 42 | 530·9 | | |
| 18 9 | 0 | 24 59·46 | 2 | 531·9 | 3 | 623·6 |
| * | 5 | 53·25 | 7 | 546·3 | 8 | 619·0 |
| | 10 | 46·39 | 12 | 576·5 | 13 | 605·8 |
| | 15 | 51·49 | 17 | 580·3 | 18 | 602·9 |
| | 20 | 56·40 | 22 | 570·0 | 23 | 602·5 |
| | 25 | 57·44 | 27 | 571·5 | 28 | 600·1 |
| | 30 | 57·07 | 32 | 569·7 | 33 | 596·0 |
| | 35 | 58·32 | 37 | 568·2 | 38 | 598·2 |
| | 40 | 58·96 | 42 | 541·3 | 43 | 599·3 |
| | 45 | 24 59·19 | 47 | 538·4 | | |
| | 50 | 25 00·91 | 52 | 529·9 | 53 | 598·6 |
| | 55 | 24 59·59 | 57 | 535·4 | 58 | 593·3 |
| 18 10 | 0 | 25 02·53 | 2 | 536·5 | 3 | 593·9 |
| | 10 | 04·39 | 12 | 527·0 | 13 | 592·9 |
| | 20 | 04·58 | 22 | 514·5 | 23 | 597·4 |
| | 25 | 03·52 | 27 | 516·9 | | |
| | 30 | 04·48 | 32 | 517·5 | 33 | 597·9 |
| | 40 | 07·40 | 42 | 514·7 | 43 | 595·1 |
| | 50 | 08·28 | 52 | 514·4 | 53 | 597·1 |

| Gött. Mean Time. | Declination. | |
|---|---|---|
| d. h. | Min. | ° ′ |
| 18 11 | 0 | 25 09·12 |
| | 15 | 11·37 |
| 18 12 | 0 | 12·78 |
| 18 15 | 0 | 15·83 |
| | 10 | 18·50 |
| | 15 | 19·98 |
| | 25 | 22·57 |
| | 30 | 23·09 |
| | 35 | 22·47 |
| | 40 | 21·46 |
| | 45 | 20·65 |
| | 50 | 21·06 |
| | 55 | 19·81 |
| 18 16 | 0 | 19·15 |
| | 10 | 18·81 |
| 18 17 | 0 | 15·07 |
| | 45 | 11·52 |
| 18 18 | 0 | 11·00 |
| | 10 | 12·28 |
| 18 19 | 0 | 14·73 |
| 19 7 | 0 | 25 05·72 |
| | 10 | 09·76 |
| | 20 | 12·48 |
| 19 8 | 0 | 11·77 |
| 20 9 | 0 | 25 09·76 |
| | 12 | 07·34 |
| | 31 | 03·57 |
| | 35 | 04·71 |
| 20 10 | 0 | 10·36 |
| 21 15 | 0 | 25 22·20 |
| | 11 | 19·10 |
| | 20 | 16·86 |
| | 40 | 12·75 |
| 21 16 | 0 | 10·41 |
| | 10 | 10·90 |
| 21 17 | 0 | 13·30 |
| 21 23 | 0 | 25 27·61 |
| | 10 | 29·21 |
| | 30 | 26·40 |
| 22 0 | 0 | 26·28 |
| | 20 | 26·57 |
| | 40 | 25·02 |
| | 45 | 26·74 |
| | 50 | 23·14 |
| 22 1 | 0 | 22·80 |
| | 15 | 22·40 |
| | 30 | 17·49 |
| | 35 | 21·06 |
| | 45 | 22·40 |
| 22 2 | 0 | 22·74 |
| 22 5 | 0 | 15·32 |
| | 10 | 12·67 |
| | 20 | 05·45 |
| | 25 | 02·99 |

BIFILAR. $k$=0·000140. BALANCE. $k$=0·0000085.

Nov. 17d 3h. The torsion circle of the bifilar turned from 109° 2′·5 to its original reading 110° 16′, which changed the scale reading 72 divisions.
Nov. 18d 16h—18h. The instruments were slightly disturbed.
* See notes on the Aurora Borealis, *after* the *Extra Observations of Magnetometers.*

| Bifilar Corrected. | | Balance Corrected. | | Gött. Mean Time. | | Declination. | | | Bifilar Corrected. | | Balance Corrected. | | Gött. Mean Time. | | Declination. | | | Bifilar Corrected. | | Balance Corrected. | |
|---|---|---|---|---|---|---|---|---|---|---|---|---|---|---|---|---|---|---|---|---|---|
| Min. | Sc. Div. | Min. | Mic. Div. | d. | h. | Min. | ° | ′ | Min. | Sc. Div. | Min. | Mic. Div. | d. | h. | Min. | ° | ′ | Min. | Sc. Div. | Min. | Mic. Div. |
| 2 | 521·3 | 3 | 600·6 | 22 | 5 | | | | 29 | 531·8 | | | 22 | 7 | | | | 37 | 528·3 | 37 | 970·9 |
| 17 | 526·0 | 18 | 601·9 | | | 30 | 25 | 04·10 | 32 | 535·1 | 33 | 690·9 | | | 38 | 24 | 43·69 | 38 | 525·1 | | |
| 2 | 530·4 | 3 | 607·5 | | | 35 | | 08·08 | 37 | 539·5 | 38 | 685·3 | | | 39 | | 47·00 | 39 | 524·9 | 39 | 918·4 |
| 2 | 525·3 | 3 | 613·1 | | | 40 | | 11·52 | 42 | 531·1 | 43 | 687·4 | | | 40 | | 44·30 | 40 | 519·1 | | |
| 12 | 521·2 | 13 | 613·4 | | | 50 | | 17·36 | 42 | 528·0 | 53 | 690·8 | | | | | | 41 | 513·7 | 41 | 899·9 |
| 17 | 519·2 | 18 | 612·1 | 22 | 6 | 0 | | 20·08 | 2 | 526·4 | 3 | 692·2 | | | 42 | | 42·04 | 42 | 510·7 | | |
| 27 | 517·9 | 28 | 604·4 | | | 10 | | 16·55 | 12 | 522·2 | 13 | 723·9 | | | | | | 43 | 509·2 | 43 | 889·9 |
| 32 | 518·9 | 33 | 598·9 | | | 15 | | 14·99 | 17 | 519·5 | 18 | 756·5 | | | 44 | | 42·10 | 44 | 510·0 | | |
| 37 | 521·4 | 38 | 590·8 | | | 20 | | 07·51 | 22 | 522·7 | 23 | 756·6 | | | 45 | | 42·58 | 45 | 512·2 | | |
| 42 | 526·3 | 43 | 584·7 | | | 25 | | 00·57 | 27 | 537·2 | | | | | 46 | | 44·84 | 46 | 515·8 | | |
| 47 | 529·8 | 48 | 580·0 | | | 30 | | 02·73 | 32 | 552·2 | 33 | 784·9 | | | | | | 47 | 517·1 | 47 | 864·6 |
| 52 | 528·0 | 53 | 574·9 | | | 35 | | 05·58 | 36 | 572·8 | | | | | | | | 48 | 515·1 | 48 | 839·2 |
| 57 | 528·6 | 58 | 569·0 | | | | | | 37 | 596·4 | 38 | 864·6 | | | 49 | | 47·10 | 49 | 514·3 | 51 | 819·5 |
| 2 | 528·8 | 3 | 565·7 | | | 40 | | 01·09 | 41 | 599·3 | | | | | 52 | | 52·21 | 52 | 510·8 | | |
| 12 | 531·1 | 13 | 565·2 | | | | | | 43 | 610·0 | | | | | | | | 53 | 506·2 | 53 | 822·1 |
| 2 | 526·6 | 3 | 570·8 | | | | | | 49 | 574·4 | | | | | 54 | | 50·89 | 54 | 502·9 | 55 | 823·0 |
| 47 | 534·2 | 48 | 581·3 | | | 50 | 25 | 08·88 | 50 | 566·0 | | | | | 56 | | 48·58 | | | 57 | 813·2 |
| 2 | 529·4 | 3 | 592·5 | | | | | | 51 | 552·7 | | | | | 58 | | 48·28 | 58 | 503·3 | 59 | 800·2 |
| 12 | 529·5 | 13 | 598·3 | | | | | | 52 | 542·7 | 52 | 1003·5 | 22 | 8 | 0 | | 48·97 | 0 | 496·4 | 1 | 788·2 |
| 2 | 528·6 | 3 | 607·1 | | | 53 | 24 | 59·98 | 54 | 529·6 | 54 | 987·6 | | | 2 | | 48·53 | 2 | 494·2 | | |
| | | | | | | 55 | 24 | 57·95 | 55 | 525·1 | | | | | | | | 3 | 490·6 | 3 | 774·2 |
| 2 | 543·1 | 3 | 645·0 | | | | | | 56 | 547·3 | 56 | 978·4 | | | 4 | | 46·11 | 4 | 491·1 | | |
| 12 | 540·3 | 13 | 645·3 | | | 57 | 25 | 01·14 | 58 | 551·8 | 58 | 971·9 | | | | | | | | 5 | 749·0 |
| 22 | 536·3 | 23 | 645·1 | | | | | | 59 | 549·2 | | | | | 6 | | 48·09 | 6 | 489·9 | 7 | 719·1 |
| 2 | 532·0 | 3 | 641·9 | 22 | 7 | 0 | | 00·78 | 0 | 547·1 | | | | | | | | 7 | 486·3 | | |
| | | | | | | | | | 1 | 557·6 | 1 | 966·2 | | | | | | 8 | 480·4 | | |
| 2 | 527·4 | 3 | 641·2 | | | 2 | | 05·92 | 2 | 566·2 | | | | | | | | 9 | 475·8 | | |
| 13 | 532·5 | 14 | 638·4 | | | | | | 3 | 572·0 | 3 | 986·3 | | | 10 | | 58·32 | 10 | 474·2 | | |
| 32 | 532·7 | 33 | 639·7 | | | 4 | | 08·75 | 4 | 576·0 | | | | | | | | 11 | 478·6 | 11 | 691·7 |
| | | | | | | 5 | | 11·12 | 5 | 577·9 | 5 | 990·2 | | | 12 | | 58·65 | 12 | 481·2 | | |
| 2 | 529·1 | 3 | 642·6 | | | | | | 6 | 577·3 | 6 | 991·2 | | | | | | 13 | 482·1 | 13 | 703·0 |
| | | | | | | 7 | | 10·40 | 7 | 575·4 | | | | | 14 | | 57·68 | 14 | 480·3 | | |
| 2 | 538·1 | 3 | 592·1 | | | | | | 8 | 571·9 | 8 | 1001·6 | | | | | | 16 | 475·7 | 16 | 711·3 |
| 12 | 537·5 | 13 | 581·6 | | | 9 | | 07·47 | 9 | 575·2 | | | | | 17 | | 54·65 | 18 | 483·8 | 18 | 716·7 |
| 22 | 537·7 | 23 | 577·6 | | | 10 | | 03·67 | 10 | 578·7 | | | | | 19 | | 56·00 | 19 | 487·1 | | |
| 41 | 536·2 | 42 | 573·7 | | | | | | 11 | 567·0 | 11 | 982·1 | | | 21 | 24 | 57·32 | 21 | 487·5 | | |
| 2 | 537·9 | 3 | 575·9 | | | 12 | | 04·53 | 12 | 559·9 | | | | | | | | 22 | 500·6 | 22 | 722·3 |
| 12 | 540·1 | | | | | | | | 13 | 559·0 | 13 | 955·7 | | | 23 | 25 | 03·47 | 23 | 512·0 | | |
| 2 | 538·2 | 3 | 578·9 | | | 14 | | 10·40 | 14 | 553·8 | | | | | | | | 24 | 572·7 | 24 | 689·5 |
| | | | | | | 15 | | 13·74 | 15 | 552·7 | | | | | 25 | 25 | 42·73 | | | | |
| 2 | 507·3 | 3 | 612·8 | | | | | | 16 | 547·7 | 16 | 947·9 | | | | | | 26 | 344·3 | 26 | 604·9 |
| 12 | 510·5 | 13 | 607·3 | | | 17 | | 19·24 | 17 | 537·2 | | | | | 27 | 25 | 58·24 | 27 | 290·0 | 26½ | 599·9 |
| 32 | 503·7 | 33 | 615·5 | | | | | | 18 | 531·0 | 18 | 943·7 | | | | | | 28 | 333·4 | 28 | 575·8 |
| 2 | 526·5 | 3 | 610·8 | | | 19 | | 15·67 | 19 | 529·2 | | | | | 29 | 25 | 28·53 | 29 | 362·5 | | |
| 12 | 530·4 | | | | | 20 | | 13·83 | 20 | 523·1 | | | | | 30 | | 20·82 | 30 | 386·1 | | |
| 22 | 529·1 | 23 | 609·7 | | | | | | 21 | 522·0 | 21 | 918·1 | | | | | | 31 | 397·5 | 31 | 563·5 |
| 32 | 533·8 | 33 | 610·0 | | | 22 | | 10·28 | 22 | 529·0 | | | | | 32 | | 19·81 | 32 | 399·1 | | |
| 42 | 548·4 | 43 | 617·8 | | | | | | 23 | 531·7 | 23 | 927·9 | | | | | | 33 | 423·4 | 33 | 562·0 |
| 47 | 533·5 | 48 | 621·9 | | | | | | 24 | 531·1 | 24 | 934·5 | | | 34 | | 15·61 | 34 | 436·8 | | |
| 52 | 530·9 | 53 | 623·9 | | | 25 | | 08·55 | 25 | 532·1 | | | | | | | | 35 | 446·7 | 35 | 520·6 |
| 2 | 534·1 | 3 | 624·0 | | | | | | 26 | 533·8 | 26 | 953·4 | | | 36 | | 18·77 | 36 | 456·9 | | |
| 17 | 528·8 | 18 | 622·6 | | | 27 | | 04·95 | 27 | 536·5 | | | | | | | | 37 | 462·2 | 37 | 502·7 |
| 32 | 528·2 | 33 | 622·6 | | | | | | 28 | 545·3 | 28 | 979·7 | | | 38 | | 19·35 | 38 | 464·8 | | |
| | | | | | | 29 | 25 | 00·74 | 29 | 556·5 | | | | | | | | 39 | 458·2 | 39 | 493·1 |
| 47 | 530·7 | 48 | 624·3 | | | | | | 30 | 570·4 | 30 | 1014·2 | | | 40 | | 17·63 | 40 | 451·1 | | |
| 2 | 534·9 | 3 | 625·8 | | | 31 | 24 | 56·94 | 31 | 577·2 | | | | | | | | 41 | 447·4 | 41 | 510·8 |
| 2 | 514·1 | 3 | 671·4 | | | | | | 32 | 569·4 | 32 | 1046·8 | | | 42 | | 12·18 | 42 | 453·1 | | |
| 12 | 520·7 | 13 | 698·5 | | | | | | 33 | 560·4 | 33 | 1050·5 | | | | | | 43 | 459·8 | 43 | 534·6 |
| | | 19 | 716·3 | | | 34 | | 52·46 | 34 | 551·4 | | | | | 44 | | 08·43 | 44 | 463·6 | | |
| 22 | 518·3 | 23 | 705·3 | | | | | | 35 | 537·4 | 35 | 1032·7 | | | | | | 45 | 470·2 | 45 | 559·4 |
| 27 | 529·5 | 28 | 696·7 | | | 36 | | 44·74 | 36 | 530·8 | | | | | 46 | | 03·60 | 46 | 483·8 | | |

BIFILAR. $k$=0·000140. BALANCE. $k$=0·0000085.

Nov. 22d 8h 24m. The bifilar reading suddenly attained a maximum at 24m 0s, and immediately diminished with great rapidity till 27m.

| Gött. Mean Time. | Declination. | | Bifilar Corrected. | | Balance Corrected. | | Gött. Mean Time. | Declination. | | Bifilar Corrected. | | Balance Corrected. | | Gött. Mean Time. | Declination. | |
|---|---|---|---|---|---|---|---|---|---|---|---|---|---|---|---|---|
| d. h. | Min. | ° ′ | Min. | Sc. Div. | Min. | Mic. Div. | d. h. | Min. | ° ′ | Min. | Sc. Div. | Min. | Mic. Div. | d. h. | Min. | ° ′ |
| 22 8 | | | 47 | 499·8 | 47 | 583·1 | 22 11 | 56 | 24 50·22 | 57 | 504·5 | 58 | 431·3 | 23 7 | 10 | 24 37·00 |
| | 48 | 24 59·50 | 48 | 515·2 | | | | | | 59 | 512·7 | | | | | |
| | | | 49 | 527·5 | 49 | 585·9 | 22 12 | 0 | 45·78 | | | | | | | |
| | 50 | 25 00·27 | 50 | 532·1 | | | | 1 | 45·20 | 2 | 526·0 | 3 | 419·5 | | 15 | 41·30 |
| | | | 51 | 529·7 | 51 | 578·9 | | 5 | 46·55 | 7 | 538·6 | 8 | 408·4 | | | |
| | 52 | 03·02 | 52 | 527·2 | | | | | | 9 | 534·6 | | | | | |
| | | | 53 | 524·6 | 53 | 582·3 | | 10 | 54·15 | 12 | 528·6 | 13 | 404·0 | | 20 | 44·73 |
| | 54 | 05·25 | 54 | 523·0 | | | | 15 | 24 59·97 | 17 | 517·3 | 18 | 406·1 | | | |
| | | | 55 | 522·8 | 55 | 593·1 | | 20 | 25 02·69 | 22 | 504·4 | 23 | 400·9 | | | |
| | 56 | 05·87 | 56 | 521·9 | 57 | 607·8 | | | | 24 | 499·9 | | | | 25 | 50·02 |
| | 58 | 05·85 | | | 59 | 619·9 | | 25 | 25 02·69 | 26 | 497·0 | | | | | |
| 22 9 | 0 | 06·04 | | | 1 | 631·2 | | | | 27 | 494·4 | 28 | 401·4 | | | |
| | 2 | 05·85 | 2 | 519·5 | 3 | 637·2 | | | | 29 | 491·1 | | | | 30 | 24 57·01 |
| | 4 | 05·35 | | | 7 | 649·2 | | 30 | 25 00·44 | 32 | 493·4 | 33 | 397·7 | | 35 | 25 01·24 |
| | 8 | 04·44 | | | | | | 35 | 24 58·89 | 37 | 494·1 | 38 | 397·3 | | 40 | 05·20 |
| | 10 | 04·37 | | | | | | 40 | 24 58·72 | 42 | 494·3 | 43 | 397·4 | | 45 | 09·57 |
| | 14 | 07·85 | 19 | 521·8 | 15 | 652·3 | | 45 | 24 59·03 | 47 | 495·9 | 48 | 408·7 | | 50 | 09·32 |
| | 25 | 09·86 | 27 | 518·9 | 28 | 653·3 | 22 13 | 0 | 24 56·40 | 2 | 496·8 | 3 | 423·9 | 23 8* | 0 | 12·31 |
| | 41 | 11·77 | 42 | 524·8 | 42 | 646·0 | | 10 | 25 00·98 | 12 | 509·4 | 13 | 442·1 | | 10 | 12·40 |
| 22 10 | 0 | 13·76 | 2 | 510·8 | 3 | 626·2 | | 20 | 11·24 | 22 | 518·1 | 23 | 446·4 | | 20 | 12·98 |
| | 11 | 25 02·35 | 12 | 528·0 | 12 | 615·8 | | 30 | 15·51 | 32 | 512·8 | 33 | 453·3 | | 25 | 11·22 |
| | 15 | 24 59·23 | 15 | 538·9 | | | | 45 | 10·88 | 46 | 514·6 | 47 | 421·8 | | 30 | 08·92 |
| | | | 17 | 538·1 | 18 | 595·2 | 22 14 | 0 | 03·63 | 2 | 518·1 | 3 | 413·0 | | 35 | 08·79 |
| | 20 | 25 02·05 | 22 | 536·5 | 23 | 571·4 | | 15 | 03·63 | 17 | 519·0 | 18 | 419·5 | | 40 | 09·93 |
| | | | 24 | 524·4 | | | | 30 | 04·28 | 32 | 512·7 | 33 | 427·5 | | | |
| | 25 | 06·36 | | | 26 | 562·5 | 22 15 | 0 | 11·37 | 2 | 506·2 | 3 | 468·0 | | 55 | 12·04 |
| | | | 27 | 517·0 | 28 | 559·3 | | 31 | 15·34 | 32 | 530·8 | 33 | 505·1 | 23 9 | 0 | 12·11 |
| | 30 | 01·81 | 31 | 531·9 | | | 22 16 | 0 | 17·15 | 2 | 523·8 | 3 | 538·6 | | 15 | 08·34 |
| | | | 32 | 533·4 | 33 | 551·5 | 22 18 | 0 | 26·50 | 2 | 499·1 | 3 | 553·3 | 23 10 | 0 | 10·70 |
| | 34 | 25 00·03 | | | | | | 5 | 27·96 | 7 | 499·7 | 8 | 551·1 | | | |
| | 35 | 24 58·82 | 36 | 543·5 | | | | 10 | 26·61 | 12 | 509·7 | 13 | 550·4 | 27 11 | 0 | 25 05·85 |
| | | | 37 | 547·8 | 38 | 546·0 | | 15 | 27·17 | 17 | 510·7 | 18 | 545·7 | | 11 | 04·78 |
| | | | 39 | 553·3 | | | | 20 | 27·31 | 22 | 523·5 | 23 | 543·1 | | 31 | 05·85 |
| | 40 | 24 59·59 | | | 41 | 528·9 | | 25 | 27·34 | 27 | 521·9 | 28 | 539·7 | | 45 | 08·58 |
| | | | 42 | 551·4 | 43 | 514·3 | | 30 | 25·17 | 32 | 533·5 | 33 | 539·3 | 27 12 | 0 | 08·58 |
| | | | 44 | 551·4 | | | | 35 | 25·06 | 37 | 532·9 | 38 | 539·1 | 28 15 | 0 | 25 21·10 |
| | 45 | 25 03·60 | | | | | | 45 | 22·03 | 47 | 533·4 | 48 | 542·8 | | 10 | 22·47 |
| | 46 | 11·14 | 47 | 566·1 | 48 | 496·7 | 22 19 | 0 | 19·55 | 2 | 533·7 | 3 | 558·7 | 28 16 | 0 | 12·53 |
| | | | 49 | 562·5 | | | | 10 | 19·05 | 12 | 533·0 | 13 | 564·1 | | 30 | 09·82 |
| | 50 | 16·77 | | | 51 | 479·1 | | 15 | 16·15 | 17 | 537·0 | 18 | 566·5 | 28 17 | 0 | 13·86 |
| | | | 52 | 548·4 | 53 | 467·4 | | 20 | 17·22 | 22 | 538·3 | 23 | 570·8 | | | |
| | | | 54 | 542·0 | | | | 25 | 18·25 | 27 | 538·7 | 28 | 573·6 | 2 6 | 0 | 25 06·23 |
| | 55 | 21·16 | | | 56 | 451·5 | | 30 | 18·57 | 32 | 538·1 | 33 | 576·3 | | 10 | 06·32 |
| | | | 57 | 533·5 | 58 | 449·0 | | 40 | 18·72 | 42 | 535·7 | 43 | 581·9 | | 41 | 14·50 |
| 22 11 | 0 | 19·21 | 2 | 529·4 | 3 | 452·8 | 22 20 | 0 | 19·55 | 2 | 537·5 | 3 | 587·2 | 2 7 | 0 | 14·17 |
| | 5 | 10·06 | 7 | 530·3 | 8 | 431·4 | 22 21 | 0 | 18·50 | 2 | 524·9 | 3 | 604·9 | | | |
| | 10 | 04·71 | 12 | 550·0 | 13 | 439·5 | | 20 | 20·45 | 22 | 512·0 | 23 | 615·0 | 4 8 | 0 | 25 17·49 |
| | | | 14 | 548·7 | | | 22 22 | 0 | 16·18 | 2 | 517·7 | 3 | 628·0 | | 5 | 12·98 |
| | 15 | 02·15 | 17 | 539·8 | 18 | 427·7 | | 15 | 16·75 | 17 | 521·0 | 18 | 625·5 | | 10 | 11·17 |
| | | | 19 | 533·1 | | | 22 23 | 0 | 15·81 | 2 | 526·4 | 3 | 628·0 | | 25 | 08·92 |
| | 20 | 00·67 | 22 | 537·1 | 23 | 416·4 | | 20 | 19·10 | 22 | 522·0 | 23 | 634·8 | 4 9 | 0 | 14·80 |
| | 25 | 01·93 | 27 | 534·2 | 28 | 393·1 | 23 0 | 0 | 18·99 | 2 | 512·3 | 3 | 645·3 | 4 10 | 0 | 12·78 |
| | 30 | 07·20 | 32 | 520·9 | 33 | 389·0 | | | | | | | | 4 11 | 0 | 25 02·55 |
| | 35 | 03·28 | 37 | 539·9 | 38 | 382·5 | 23 6 | 0 | 25 13·63 | 2 | 532·9 | 3 | 658·2 | | 5 | 24 57·64 |
| | 40 | 11·64 | 42 | 527·3 | 43 | 376·0 | 23 7 | 0 | 24 39·14 | 2 | 539·6 | 3 | 668·5 | | 10 | 56·63 |
| | 45 | 20·62 | 47 | 491·0 | 48 | 380·7 | | 1 | 38·00 | | | | | | 15 | 58·35 |
| | | | 49 | 475·7 | | | | 4 | 35·61 | | | | | | 20 | 57·59 |
| | 50 | 25 14·73 | 51 | 471·2 | | | | 5 | 34·54 | | | | | | 25 | 56·57 |
| | | | 52 | 473·9 | 53 | 422·9 | | 6 | 34·27 | 7 | 552·6 | 7 | 665·3 | | 30 | 56·18 |
| | | | 54 | 485·6 | | | | 8 | 35·48 | | | | | | 40 | 24 58·85 |
| | 55 | 24 52·40 | | | | | | 9 | 36·16 | | | | | | 45 | 25 02·19 |

BIFILAR. $k$=0·000140. BALANCE. $k$=0·0000085.

Nov. 23d 6h. At 6h 10m the declination magnet had not changed from its position at 6h 0m.
* See notes on the Aurora Borealis, *after* the *Extra Observations of Magnetometers.*

| Bifilar Corrected. | | Balance Corrected. | | Gött. Mean Time. | | Declination. | | Bifilar Corrected. | | Balance Corrected. | | Gött. Mean Time. | | Declination. | | Bifilar Corrected. | | Balance Corrected. | |
|---|---|---|---|---|---|---|---|---|---|---|---|---|---|---|---|---|---|---|---|
| Min. | Sc. Div. | Min. | Mic. Div. | d. | h. | Min. | ° ′ | Min. | Sc. Div. | Min. | Mic. Div. | d. | h. | Min. | ° ′ | Min. | Sc. Div. | Min. | Mic. Div. |
| 11 | 563·8 | | | 4 | 12 | 0 | 25 06·34 | 2 | 523·9 | 3 | 598·9 | 20 | 4 | 25 | 25 09·46 | 27 | 532·5 | 28 | 670·6 |
| 12 | 565·5 | 13 | 661·5 | | | 30 | 13·12 | 32 | 528·0 | 33 | 587·8 | | | 35 | 11·39 | 37 | 530·0 | 38 | 666·9 |
| 14 | 569·8 | | | 4 | 13 | 0 | 10·94 | 2 | 534·9 | 3 | 576·6 | | | 50 | 12·42 | 52 | 534·3 | 53 | 663·8 |
| 16 | 568·6 | | | 4 | 15 | 0 | 11·00 | 2 | 543·9 | 3 | 558·5 | 20 | 5 | 0 | 25 11·68 | 2 | 528·1 | 3 | 663·6 |
| 17 | 568·5 | 18 | 657·8 | | | 30 | 12·31 | 32 | 538·3 | 33 | 559·3 | 20 | 9 | 0 | 24 51·09 | 2 | 567·4 | 3 | 600·8 |
| 19 | 568·3 | | | 4 | 16 | 0 | 16·55 | 2 | 539·1 | 3 | 555·1 | | | 5 | 25 01·27 | 7 | 555·0 | 8 | 596·0 |
| 21 | 569·1 | | | | | | | | | | | | | 10 | 07·34 | 12 | 541·5 | 13 | 597·5 |
| 22 | 569·6 | 23 | 653·0 | 5 | 9 | 0 | 25 07·89 | 2 | 537·2 | 3 | 607·3 | | | 15 | 06·86 | 17 | 546·2 | 18 | 592·8 |
| 24 | 571·6 | | | | | 10 | 08·92 | 11 | 540·4 | 12 | 557·0 | | | 20 | 12·11 | 22 | 535·6 | 23 | 592·5 |
| 26 | 571·6 | | | 5 | 10 | 0 | 13·16 | 2 | 535·1 | 3 | 604·9 | | | 25 | 11·10 | 27 | 532·3 | 28 | 590·7 |
| 27 | 570·8 | 28 | 647·6 | | | | | | | | | | | 30 | 11·74 | 32 | 527·2 | 33 | 589·6 |
| 29 | 567·3 | | | 14 | 5 | 0 | 25 19·10 | 2 | 547·5 | 3 | 586·2 | | | 40 | 10·53 | 42 | 517·2 | 43 | 590·2 |
| 32 | 557·9 | 33 | 643·7 | | | 19 | 20·58 | | | | | | | 50 | 07·08 | 52 | 518·7 | 53 | 590·8 |
| 37 | 550·1 | 38 | 639·2 | 14 | 6 | 0 | 15·20 | 2 | 518·8 | 3 | 632·1 | 20 | 10 | 0 | 06·73 | 2 | 523·2 | 3 | 591·4 |
| 42 | 542·9 | 43 | 635·2 | | | 16 | 19·01 | 17 | 518·3 | 18 | 688·0 | | | 30 | 10·36 | 32 | 529·9 | 33 | 601·5 |
| 47 | 530·0 | 48 | 634·6 | | | 20 | 22·38 | 22 | 520·3 | 23 | 713·2 | 20 | 11 | 0 | 12·04 | 2 | 530·8 | 3 | 601·9 |
| 52 | 530·1 | 53 | 629·6 | | | 25 | 16·95 | 27 | 533·4 | 28 | 749·9 | | | 15 | 11·71 | 17 | 530·3 | 18 | 601·2 |
| 2 | 524·3 | 3 | 628·5 | | | | | 29 | 545·4 | | | 20 | 12 | 0 | 09·94 | 2 | 537·3 | 3 | 593·6 |
| 11 | 521·4 | 12 | 630·0 | | | 30 | 14·35 | | | 31 | 768·5 | 20 | 13 | 0 | 11·21 | 2 | 545·5 | 3 | 543·4 |
| 22 | 516·2 | 23 | 636·0 | | | | | 32 | 555·1 | 33 | 782·3 | | | 10 | 06·54 | 12 | 536·7 | 13 | 542·5 |
| 27 | 515·3 | 28 | 638·1 | | | | | 34 | 550·1 | | | | | 15 | 05·92 | 17 | 532·5 | 18 | 545·9 |
| 32 | 521·8 | 33 | 638·9 | | | 35 | 16·45 | 36 | 555·4 | 37 | 801·3 | | | 25 | 07·07 | 27 | 532·0 | 28 | 555·5 |
| 37 | 524·7 | 38 | 642·2 | | | | | 38 | 559·7 | | | | | 30 | 09·00 | 32 | 534·5 | 33 | 558·6 |
| 42 | 527·6 | 43 | 641·5 | | | | | 39 | 560·0 | 39 | 806·8 | | | | | 47 | 538·7 | 48 | 558·2 |
| 47 | 527·0 | | | | | 40 | 20·03 | 41 | 545·1 | 42 | 803·5 | | | 50 | 17·84 | 52 | 535·4 | 53 | 558·0 |
| 57 | 527·2 | 58 | 640·9 | | | | | 43 | 535·8 | | | | | 55 | 17·49 | 57 | 535·9 | | |
| 2 | 525·2 | 3 | 641·8 | | | | | 44 | 531·0 | | | 20 | 14 | 0 | 17·60 | 2 | 534·9 | 3 | 552·4 |
| 17 | 520·6 | 18 | 645·6 | | | 45 | 21·71 | 46 | 529·9 | 47 | 801·3 | | | 5 | 16·38 | 7 | 531·7 | 8 | 549·2 |
| 2 | 526·9 | 3 | 639·9 | | | | | 48 | 529·8 | 49 | 806·9 | | | 10 | 14·20 | 12 | 531·1 | 13 | 544·8 |
| | | | | | | 50 | 20·36 | 52 | 530·2 | 53 | 813·7 | | | 30 | 09·35 | 32 | 528·1 | 33 | 541·5 |
| 2 | 544·9 | 3 | 601·1 | | | 55 | 16·45 | 57 | 524·0 | 58 | 818·5 | | | 35 | 09·24 | 37 | 528·4 | 38 | 541·7 |
| 12 | 531·0 | 13 | 602·6 | 14 | 7 | 0 | 09·69 | 2 | 521·1 | 3 | 804·8 | | | 50 | 11·95 | 52 | 527·9 | 53 | 549·0 |
| 32 | 519·6 | 33 | 612·6 | | | 5 | 09·08 | 7 | 527·4 | 8 | 792·4 | | | 55 | 12·11 | 57 | 526·9 | 58 | 551·0 |
| 47 | 518·7 | 48 | 614·9 | | | 10 | 09·67 | 12 | 531·8 | 13 | 788·1 | 20 | 15 | 0 | 11·72 | 2 | 528·5 | 3 | 552·3 |
| 2 | 532·2 | 3 | 609·2 | | | 20 | 10·43 | 22 | 533·3 | 23 | 791·3 | | | 5 | 11·88 | 7 | 529·8 | 8 | 553·3 |
| 2 | 533·1 | 3 | 605·4 | | | 30 | 04·84 | 32 | 531·9 | 33 | 767·3 | | | 10 | 12·15 | 12 | 530·7 | 13 | 554·1 |
| 12 | 536·2 | 13 | 601·3 | | | 41 | 07·65 | 42 | 525·4 | 43 | 756·3 | 20 | 16 | 0 | 15·47 | 2 | 537·2 | 3 | 555·2 |
| 2 | 538·1 | 3 | 589·1 | 14 | 8 | 0 | 13·88 | 2 | 517·4 | 3 | 749·5 | 20 | 17 | 0 | 15·17 | 2 | 535·4 | 3 | 558·4 |
| 32 | 533·8 | 33 | 599·8 | | | 25 | 12·83 | 27 | 527·9 | 28 | 750·0 | | | 30 | 16·62 | 32 | 534·6 | 33 | 559·1 |
| 2 | 532·9 | 3 | 599·7 | 14 | 9 | 0 | 11·37 | 2 | 532·5 | 3 | 719·4 | 20 | 18 | 0 | 19·84 | 2 | 535·9 | 3 | 563·9 |
| | | | | | | | | | | | | | | 10 | 22·37 | 12 | 541·1 | 13 | 562·1 |
| 2 | 540·9 | 3 | 618·3 | 15 | 14 | 0 | 25 18·30 | 2 | 535·3 | 3 | 603·5 | | | 15 | 23·34 | 17 | 543·8 | | |
| 12 | 541·2 | 13 | 619·9 | | | 5 | 20·22 | 7 | 530·6 | 8 | 603·7 | | | 20 | 25·87 | 22 | 543·0 | 23 | 557·8 |
| 42 | 537·7 | | | | | 10 | 20·58 | 12 | 528·6 | | | | | 25 | 25·09 | 27 | 547·0 | 28 | 554·2 |
| 2 | 542·9 | 3 | 615·9 | | | 25 | 17·12 | 27 | 531·9 | 28 | 592·9 | | | 30 | 25·16 | 32 | 546·7 | 33 | 551·7 |
| | | | | 15 | 15 | 0 | 16·03 | 2 | 532·9 | 3 | 593·8 | | | 35 | 23·75 | 37 | 546·3 | 38 | 550·4 |
| 2 | 528·1 | 3 | 651·1 | | | | | | | | | | | 40 | 21·83 | 42 | 547·4 | 43 | 548·5 |
| 7 | 529·9 | 8 | 653·5 | 16 | 5 | 0 | 25 04·78 | 2 | 511·5 | 3 | 650·8 | | | 45 | 21·06 | 47 | 548·3 | 48 | 547·3 |
| 12 | 534·4 | 13 | 651·5 | | | 10 | 06·24 | 12 | 519·4 | 13 | 654·0 | 20 | 19 | 0 | 19·32 | 2 | 542·4 | 3 | 549·5 |
| 27 | 529·4 | 28 | 646·6 | | | 15 | 05·58 | 17 | 519·1 | 18 | 656·1 | | | 10 | 17·33 | 12 | 538·9 | 13 | 557·4 |
| 2 | 540·0 | 3 | 635·6 | | | 25 | 07·05 | 27 | 519·5 | 28 | 658·7 | | | 20 | 18·63 | 22 | 536·2 | 23 | 564·4 |
| 2 | 531·2 | 3 | 624·0 | | | 35 | 09·42 | 37 | 519·4 | 38 | 659·1 | | | 30 | 18·60 | 32 | 537·5 | 33 | 569·3 |
| 2 | 538·7 | 3 | 609·3 | 16 | 6 | 0 | 14·23 | 2 | 528·6 | 3 | 651·0 | | | 40 | 17·06 | 42 | 538·7 | 43 | 572·7 |
| 7 | 546·6 | 8 | 605·4 | | | | | | | | | | | 50 | 16·79 | 52 | 538·7 | 53 | 574·6 |
| 12 | 552·9 | 13 | 601·9 | 20 | 3 | 0 | 25 23·92 | 2 | 535·8 | 3 | 630·2 | 20 | 20 | 0 | 15·51 | 2 | 538·2 | 3 | 578·7 |
| 17 | 546·9 | 18 | 601·1 | | | 16 | 25 20·35 | 17 | 526·0 | 18 | 640·4 | | | 30 | 15·25 | 32 | 539·1 | 33 | 588·7 |
| 22 | 538·3 | | | | | 25 | 25 18·50 | 27 | 533·0 | 28 | 667·2 | 20 | 21 | 0 | 14·75 | 2 | 534·7 | 3 | 591·0 |
| 27 | 533·6 | 28 | 602·1 | 20 | 4 | 0 | 24 53·67 | 2 | 547·3 | 3 | 677·6 | | | | | | | | |
| 32 | 533·0 | | | | | 5 | 25 00·10 | 7 | 545·1 | 8 | 677·7 | 21 | 4 | 0 | 01·14 | 2 | 521·0 | 3 | 672·9 |
| 42 | 528·7 | 43 | 603·4 | | | 10 | 05·38 | 12 | 539·6 | 13 | 677·6 | | | 10 | 03·70 | 12 | 525·1 | 13 | 675·7 |
| 47 | 523·5 | | | | | 21 | 07·51 | 22 | 532·2 | 23 | 672·3 | | | 20 | 10·80 | 22 | 530·6 | 23 | 675·4 |

BIFILAR. $k$=0·000140. BALANCE. $k$=0·0000085.

| Gött. Mean Time. | Declination. | Bifilar Corrected. | | Balance Corrected. | | Gött. Mean Time. | Declination. | Bifilar Corrected. | | Balance Corrected. | | Gött. Mean Time. | Declination. |
|---|---|---|---|---|---|---|---|---|---|---|---|---|---|
| d. h. | Min. ° ′ | Min. | Sc. Div. | Min. | Mic. Div. | d. h. | Min. ° ′ | Min. | Sc. Div. | Min. | Mic. Div. | d. h. | Min. ° ′ |
| 21 4 | 30 25 16·41 | 32 | 528·1 | 33 | 673·1 | 26 9 | 0 25 12·48 | 2 | 535·7 | 3 | 618·3 | 27 17 | 0 25 12·89 |
| | 40 21·50 | 42 | 519·0 | 43 | 673·7 | | 10 09·96 | 12 | 529·3 | 13 | 616·3 | | |
| | 50 21·53 | 52 | 535·1 | 53 | 671·9 | | 20 13·72 | 22 | 529·1 | 23 | 617·0 | 28 2 | 0 25 15·65 |
| 21 5 | 0 19·37 | 2 | 526·0 | 3 | 668·4 | | 35 15·07 | 37 | 532·6 | 38 | 614·4 | | 10 15·17 |
| | 10 16·08 | 12 | 520·9 | 13 | 676·7 | 26 10 | 0 14·33 | 2 | 534·4 | 3 | 608·1 | 28 3 | 0 15·38 |
| | 20 13·46 | 22 | 532·6 | 23 | 674·7 | 26 18 | 0 14·46 | 2 | 545·4 | 3 | 568·8 | | |
| | 30 17·07 | 32 | 523·3 | 33 | 676·0 | | 10 15·45 | 12 | 543·2 | 13 | 572·5 | 29 10 | 3 25 14·37 |
| | 40 00·89 | 42 | 537·6 | 43 | 675·7 | 26 19 | 0 17·96 | 2 | 544·2 | 3 | 570·0 | | 10 24 53·07 |
| | 45 04·88 | 47 | 551·7 | 48 | 669·2 | | | | | | | | 24 24 47·42 |
| | 50 11·88 | 52 | 537·0 | 53 | 667·0 | 27 10 | 0 25 15·25 | 2 | 530·8 | 3 | 601·6 | | 49 24 50·38 |
| | 55 14·10 | 57 | 533·4 | 58 | 666·5 | | 10 12·29 | 12 | 535·0 | 13 | 599·3 | 29 13 | 0 25 15·72 |
| 21 6 | 0 14·71 | 2 | 528·2 | 3 | 656·9 | | 15 12·01 | 17 | 537·2 | 18 | 599·8 | | 10 18·03 |
| | 5 13·56 | 7 | 528·4 | 8 | 654·5 | | 20 12·78 | 22 | 536·1 | 23 | 599·4 | | |
| | 10 14·33 | 12 | 530·6 | 13 | 651·0 | 27 11 | 0 13·64 | 2 | 531·3 | 3 | 600·8 | | 20 20·65 |
| | 30 12·18 | 32 | 532·8 | 33 | 645·2 | 27 12 | 0 08·65 | 2 | 535·6 | 3 | 600·2 | | 25 16·32 |
| | 40 12·93 | 42 | 532·0 | 43 | 642·9 | | 22 15·11 | 23 | 530·0 | 24 | 602·6 | | 30 11·54 |
| | 55 14·30 | 57 | 535·4 | | | | 30 15·20 | 32 | 527·0 | 33 | 603·0 | | 35 13·63 |
| 21 7 | 0 15·27 | 2 | 531·2 | 3 | 640·3 | | 40 14·06 | 42 | 520·4 | 43 | 602·8 | | 45 09·69 |
| 21 11 | 0 18·68 | 2 | 537·4 | 3 | 598·7 | | 45 12·02 | 47 | 517·7 | 48 | 602·7 | | 50 25 03·61 |
| | 25 13·59 | 27 | 530·3 | 28 | 594·6 | | 50 09·76 | 52 | 517·2 | 53 | 602·5 | | 55 24 58·62 |
| | 40 12·33 | 41 | 536·0 | 42 | 593·1 | | 55 07·47 | 57 | 518·4 | 58 | 602·0 | 29 14 | 0 46·92 |
| 21 12 | 0 11·37 | 2 | 535·8 | 3 | 593·2 | 27 13 | 0 06·09 | 2 | 520·4 | 3 | 604·0 | | 5 45·54 |
| | | | | | | | 5 05·45 | 7 | 522·4 | 8 | 604·6 | | 10 38·42 |
| 26 8 | 0 25 11·48 | 2 | 529·0 | 3 | 621·6 | | 10 05·65 | 12 | 523·3 | 13 | 605·7 | | 15 24 49·07 |
| | 10 11·71 | 12 | 535·7 | 13 | 621·8 | | 21 05·80 | 22 | 524·7 | 23 | 606·0 | | 20 25 02·40 |
| | 15 05·45 | 17 | 540·8 | | | | 40 05·58 | 41 | 526·9 | 42 | 603·7 | | 25 25 02·15 |
| | 20 02·25 | 22 | 541·1 | 23 | 621·2 | 27 14 | 0 03·60 | 2 | 527·4 | 3 | 599·7 | | 30 24 53·11 |
| | 25 25 00·50 | 27 | 538·4 | 28 | 622·6 | | 10 03·16 | 12 | 525·4 | 13 | 599·7 | | 35 24 56·97 |
| | 30 24 59·43 | 32 | 541·6 | | | | 30 03·30 | 32 | 527·0 | 33 | 602·0 | | 40 25 00·94 |
| | 35 25 01·27 | 37 | 545·5 | 38 | 620·2 | 27 15 | 0 07·04 | 2 | 535·0 | 3 | 600·6 | | 50 09·22 |
| | 40 03·32 | 42 | 549·9 | 43 | 614·7 | | 30 07·34 | 32 | 532·3 | 33 | 600·6 | | 55 11·30 |
| | 45 06·73 | 47 | 548·7 | 48 | 612·3 | 27 16 | 0 10·41 | 2 | 535·4 | 3 | 599·6 | 29 15 | 0 12·72 |
| | 50 12·60 | 52 | 536·3 | 53 | 613·7 | | 30 13·52 | 31 | 538·2 | 32 | 596·2 | | 10 08·38 |

BIFILAR. $k=0{\cdot}000140$. BALANCE. $k=0{\cdot}0000085$.

| Bifilar Corrected. | | Balance Corrected. | | Gött. Mean Time. | Declination. | | Bifilar Corrected. | | Balance Corrected. | | Gött. Mean Time. | Declination. | | Bifilar Corrected. | | Balance Corrected. | |
|---|---|---|---|---|---|---|---|---|---|---|---|---|---|---|---|---|---|
| Min. | Sc. Div. | Min. | Mic. Div. | d. h. | Min. | ° ′ | Min. | Sc. Div. | Min. | Mic. Div | d. h. | Min. | ° ′ | Min. | Sc. Div. | Min. | Mic. Div. |
| 2 | 538·1 | 3 | 595·0 | 29 15 | 15 | 25 03·94 | 17 | 496·6 | 18 | 569·2 | 30 8 | 15 | 25 23·51 | 17 | 542·3 | 18 | 614·1 |
| | | | | | 25 | 05·22 | 27 | 491·1 | 28 | 559·7 | | 20 | 11·37 | 22 | 523·0 | 23 | 616·2 |
| 2 | 532·8 | 3 | 603·5 | | 30 | 02·89 | 32 | 494·6 | 33 | 566·2 | | 25 | 00·27 | 27 | 549·9 | 28 | 609·1 |
| 12 | 535·1 | 13 | 605·0 | | 40 | 01·95 | 42 | 510·3 | 43 | 579·3 | | 30 | 05·79 | 32 | 538·8 | 33 | 608·5 |
| 2 | 536·6 | 3 | 608·7 | | 55 | 15·44 | 57 | 500·4 | 58 | 604·5 | | 35 | 08·75 | 37 | 536·1 | | |
| | | | | 29 16 | 0 | 15·91 | 2 | 492·9 | 3 | 608·7 | | 45 | 05·65 | 47 | 532·9 | 48 | 609·1 |
| 4 | 543·6 | 5 | 853·5 | | 10 | 10·43 | 12 | 500·2 | 13 | 609·8 | 30 9 | 0 | 06·26 | 2 | 538·1 | 3 | 614·4 |
| 11 | 528·6 | 12 | 911·0 | | 20 | 06·73 | 22 | 512·2 | 23 | 609·7 | | 30 | 06·03 | 32 | 528·4 | 33 | 619·1 |
| 25 | 526·9 | 26 | 816·7 | | 30 | 05·85 | 32 | 517·7 | | | 30 10 | 0 | 07·00 | 2 | 532·9 | 3 | 621·7 |
| 50 | 510·2 | 51 | 759·0 | | 45 | 08·19 | 47 | 515·5 | 48 | 613·6 | | | | | | | |
| 2 | 515·1 | 3 | 680·3 | 29 17 | 0 | 09·15 | 2 | 516·0 | 3 | 612·1 | 31 6 | 0 | 25 15·85 | 2 | 537·1 | 3 | 652·5 |
| 12 | 524·5 | 13 | 668·9 | | 20 | 10·43 | 22 | 514·0 | 23 | 611·5 | | 20 | 12·18 | 22 | 543·6 | 23 | 652·6 |
| 18 | 505·6 | 19 | 670·3 | | 40 | 11·03 | 42 | 514·8 | 43 | 604·2 | | 40 | 14·03 | 42 | 537·6 | 43 | 650·6 |
| 22 | 492·5 | 23 | 670·7 | 29 18 | 0 | 10·67 | 2 | 517·6 | 3 | 599·6 | 31 7 | 0 | 12·75 | 2 | 544·1 | 3 | 647·0 |
| 27 | 503·3 | 28 | 674·5 | 29 19 | 0 | 11·48 | 2 | 523·5 | 3 | 618·7 | | 20 | 08·28 | 22 | 533·8 | 23 | 649·3 |
| 32 | 516·6 | 33 | 678·2 | | 10 | 13·36 | 12 | 521·0 | 13 | 625·9 | | 30 | 07·04 | 32 | 539·5 | 33 | 648·9 |
| 37 | 520·4 | 38 | 679·2 | | 20 | 11·44 | 22 | 526·9 | 23 | 628·0 | | 45 | 10·97 | 46 | 538·6 | 47 | 648·9 |
| 47 | 507·2 | 48 | 716·2 | | 30 | 11·77 | 32 | 528·9 | 33 | 630·7 | 31 8 | 0 | 12·98 | 2 | 538·7 | 3 | 645·1 |
| 52 | 505·6 | 53 | 724·8 | 29 20 | 0 | 11·34 | 2 | 531·5 | 3 | 633·0 | | 31 | 12·95 | 32 | 535·8 | 33 | 643·4 |
| 57 | 511·8 | 58 | 733·3 | | | | | | | | 31 9 | 0 | 12·83 | 2 | 537·0 | 3 | 633·7 |
| 2 | 539·9 | 3 | 733·3 | 30 7 | 0 | 25 17·12 | 2 | 522·4 | 3 | 710·3 | 31 10 | 0 | 03·38 | 2 | 547·6 | 3 | 616·4 |
| 7 | 548·1 | | | | 10 | 12·80 | 12 | 527·9 | 13 | 688·2 | | 10 | 07·47 | 12 | 542·5 | 13 | 619·2 |
| 12 | 568·5 | 13 | 709·7 | | 15 | 15·15 | 17 | 526·7 | 18 | 683·5 | | 20 | 08·05 | 22 | 541·6 | 23 | 615·2 |
| 17 | 566·2 | 18 | 692·2 | | 20 | 15·78 | 22 | 531·4 | 23 | 680·4 | | 35 | 10·03 | 37 | 538·4 | 38 | 610·9 |
| 22 | 530·0 | 23 | 697·5 | | 30 | 16·82 | 32 | 521·8 | 33 | 682·5 | | 40 | 06·23 | 42 | 548·1 | 43 | 604·3 |
| 27 | 505·3 | 28 | 700·2 | | 35 | 06·63 | 37 | 536·9 | 38 | 684·1 | | 45 | 06·19 | 47 | 555·9 | 48 | 601·3 |
| 32 | 524·9 | 33 | 686·2 | | 40 | 00·69 | 42 | 552·9 | 43 | 672·9 | | 50 | 10·16 | 52 | 549·1 | 53 | 602·0 |
| 37 | 536·8 | 38 | 679·4 | | 45 | 07·34 | 47 | 538·6 | 48 | 665·7 | 31 11 | 0 | 10·98 | 2 | 533·0 | 3 | 604·6 |
| 42 | 516·5 | 43 | 665·6 | | 50 | 07·31 | 52 | 542·0 | 53 | 652·0 | | 40 | 11·14 | 42 | 531·4 | 43 | 609·1 |
| 52 | 515·5 | 53 | 635·7 | | 55 | 08·66 | 57 | 531·7 | 58 | 640·2 | 31 12 | 0 | 09·30 | 2 | 532·1 | 3 | 609·9 |
| 57 | 507·2 | 58 | 620·8 | 30 8 | 0 | 06·84 | 2 | 557·8 | 3 | 620·5 | | 30 | 10·16 | 32 | 528·8 | 33 | 612·9 |
| 2 | 496·4 | 3 | 603·6 | | 5 | 11·34 | 7 | 565·7 | 8 | 607·4 | 31 13 | 0 | 11·51 | 2 | 528·6 | 3 | 616·3 |
| 12 | 489·1 | 13 | 582·7 | | 10 | 19·68 | 12 | 550·0 | 13 | 607·4 | | | | | | | |

BIFILAR. $k=0{\cdot}000140$. BALANCE. $k=0{\cdot}0000085$.

Dec. 30d 10h. The magnets have evidently been disturbed throughout the remainder of the night.

## NOTES ON THE AURORÆ BOREALES.

| | d. | h. | m. | |
|---|---|---|---|---|
| Feb. | 11 | 13 | 5. | Faint auroral light? $14^h$ $5^m$. Faint auroral light? |
| Feb. | 22 | 8 | 30. | Very faint auroral (?) light to NNW. |
| March | 2 | 9 | 25. | Sky milky to W. Aurora? Bright moonlight. |
| March | 7 | 8 | 25. | Band of auroral light to N. $8^h$ $30^m$. Brightest to N by W.; streamers from NNE. $9^h$ $0^m$. Auroral arch about 5° altitude. Faint streamers from N by W. $9^h$ $35^m$. Streamers. |
| March | 9 | 12 | 45. | Rather bright auroral light to N. |
| March | 12 | 11 | 0. | Faint auroral light. $35^m$. Auroral light gone. $12^h$ $0^m$. Clear to N., and no aurora visible. |
| March | 29 | 11 | 26. | Evidently a bright aurora, with streamers, but scarcely visible on account of the bright moonlight. |
| | | 12 | 0. | Fine auroral arch. Azimuths of extremities 35° and 286°, counting from N. to E., S., and W.; altitude of lower distinct edge 11°; breadth of the luminous arch at the magnetic meridian 5°. |
| | | | 6. | Pencils of aurora *within* the arch at the azimuth 327°. Lunar corona. Yellow portion 2°·7 diameter. |
| | | | 10. | The auroral arch has fallen in at azimuth 340°; it has a cycloidal termination at azimuth 301°, and slopes off gradually to E. |
| | | | 13. | Faint streamers due N. Much of the inner edge of the arch is now nearly a straight line. |
| | | | 18. | Faint streamers continue at the N. Arch brightest at azimuth of 317°. |
| | | | 26. | Auroral arch fainter; cycloidal termination at azimuth 322°; the arch slopes gradually from the meridian to near the horizon at the eastern extremity, azimuth 30°. |
| | | | 28. | Pencils at azimuth 326°. $31^m$. Pencils at the W. extremity, azimuth 328°. Aurora much fainter, losing the character of an arch—nearly amorphous and fallen in at 0° azimuth, where there is a bright point; patches of cloud cross from eastwards. |
| | | | 37. | Bright at 3° azimuth. Flickering. $46^m$. Faint diffused light. Aurora a little more to W. now. Streaks of fine cirri to NE. (?) |
| | | 13 | 3. | The auroral arch now extends from azimuth 280° to azimuth 5°; much brighter than at $12^h$ $46^m$. Bright at azimuth 325°. |
| | | | 20. | Pulsations of auroral arch, with waves of light. |
| | | 14 | 50. | The aurora very faint; moon due W. Corona much more distinct; yellow ring previously measured; blue external ring now very visible; whole diameter *about* 5°. |
| | | 16 | 0. | A few streaks of fine cirrus. The aurora very faint. |
| April | 5 | 11 | 58. | Auroral streamers to NNW. No arch. $12^h$ $11^m$. No streamers visible. $24^m$. The same. $45^m$. Auroral light to N. |
| | | 12 | 51. | Fine auroral arch. $13^h$ $6^m$. Aurora in detached patches of faintish light at different altitudes to NNW. Bright moonlight. |
| | | 13 | 40. | No aurora visible. $14^h$ $40^m$. The same. $16^h$ $6^m$. A band of auroral light to N. |
| April | 17 | 10 | 55. | Faint auroral streamers seen. $11^h$ $0^m$. A nearly homogeneous auroral light covers a great part of the sky to N. $12^h$ $0^m$. Auroral light still visible. |
| May | 8 | 11 | 5. | Auroral light to NNW.? $12^h$ $5^m$. Auroral light to NNW. |
| May | 21 | 12 | 5. | Slight auroral light (?) to N. |
| May | 22 | 11 | 10. | Very light to N. |
| Aug. | 1 | 7 | | Aurora seen at Whitehaven, mentioned in Jameson's Edinburgh New Philosophical Journal, April 1845. |
| Aug. | 2 | 14 | 15. | Auroral light or twilight to N.? |
| Aug. | 9 | 11 | | Aurora seen at Whitehaven this evening, see Jameson's Journal for April 1845. $14^h$ $30^m$. Appearance somewhat like an aurora to NW. Many falling stars. |
| Oct. | 2 | 8 | 0. | Cirri. Belt of auroral light, altitude 4°. $8^h$ $50^m$. Auroral belt, 5° altitude. $10^h$. Belt of auroral light? |
| Oct. | 5 | 9 | 15. | Sky clear, but no aurora visible. $10^h$ $10^m$. Very faint auroral light? $11^h$ $15^m$. Faint aurora. Streamers at $11^h$ $10^m$? |
| Oct. | 20 | 14 | 6. | Auroral arch extending from azimuth 208° to 108°, altitude 9°; throwing up streamers at $8^m$ from azimuth 137° and 174°, to an altitude of from 15° to 20°; the centre of the arch is at about 340° azimuth: at $11^m$–$12^m$ several bright streamers at the azimuth 310°–315° moving rapidly towards the E. The aurora must have commenced to be visible about $14^h$, as it was not noticed at $13^h$ $58^m$. $24^m$. Aurora now more diffuse and interspersed with bright patches, altitude about 15°. $41^m$. Aurora faint and amorphous. |

## NOTES ON THE AURORÆ BOREALES.

| | d. | h. | m. | |
|---|---|---|---|---|
| Oct. | 20 | 15 | 6. | Aurora now very faint and broken up; slight pulsations and very faint streamers. $41^m$. Arch very low; faint streamers at azimuths 306° and 10°, and very faint ones between. $55^m$. Faint streamers to N 4° W. |
| | | 16 | 5. | No streamers. $20^m$. Aurora bright, rapid pulsations, and waves upwards. $25^m$. Quick pulsations; streamers to NNW. $32^m$. Brilliant aurora; rapid pulsations from below upwards; a dense mass of very brilliant streamers about this time from N by E. to about NW by N., some of them reaching to an altitude of 50°; rapid pulsations upwards. The streamers terminate abruptly at N by E. $40^m$. At one time the streamers rose like a comb from the crown of an arch, the interior of which was dark, but in general they sprung from below the horizon. $45^m$. Vivid pencils springing from the horizon to an altitude of 10°, with a wavy or undulatory motion; rather rose-coloured. $52^m$. Vivid pencils to N by E.; blank space due N. |
| | | 17 | 4. | Aurora fainter, amplitude 35°, the lower portion of the aurora assuming a little of the form of the arch; three or four shooting stars seen. $7^m$. Aurora in patches, pulsations with faint streamers. $17^m$. Two bright pencils, altitude 35°, close together due north; quick pulsations; aurora getting brighter; very vivid pencils due north. $18^m$. Moving east a little, pulsation to NW. $23^m$. Two falling stars seen. Frequent pulsations about NNW.; two streamers moved to about NNE.; pencils visible to near the west point of the horizon. $25^m$. Bright pencils to NNW., altitude 30°. $30^m$. Aurora brighter, pencils rising from a *flat* arch, 3° of clear sky beneath; pencils extending to an altitude of 15° or 20°. $35^m$. Arch more diffuse, splitting into two branches to NE., to nearly which point pencils extend; shooting star to NE., among and in the direction of the streamers; all the falling stars seen this evening, move in nearly the direction of the streamers. $40^m$. Nearly as before, pencils and aurora fainter. $54^m$. Aurora much fainter. |
| | | 18 | 1. | Faint streamers reaching to Polaris; broad bright streamer to NNW., altitude 10°. $10^m$. Streamers still visible; twilight; falling star to north. |
| Nov. | 11 | 6 | 45. | Faint light seen over a bank of clouds to north. |
| | | 7 | 15. | The aurora has broken into a double arch, the upper one extending from the summit, 10° altitude, at NNW. to about WNW. $22^m$. An amorphous mass of light, 6° altitude, to NW. $24^m$. Streamers to N ½ E., faint coruscations. $27^m$. Vivid to NW.; a bright patch formed due north, about 12° altitude, the highest point of the arch about NW by N. A bank of cirro-stratus to N. and NNE. obscures the aurora there. $30^m$. A complete arch about 11° altitude, the arch now extending to almost west point of horizon. $32^m$–$38^m$. Aurora faint. $41^m$. Faint streamers to NW by N. rising from the horizon, the arch gone. $43^m$. Streamer to N by E. $47^m$. Aurora now nearly obscured by the bank of cirro-stratus; streamers to NW. $49^m$. A shooting-star moving with a *zig-zag* motion from γ Ursæ Majoris down to the horizon. $53^m$. Streamer to NNE.; auroral light again rising above the clouds. $59^m$. Faint streamers due north. |
| | | 8 | 0. | A shooting-star moved very slowly for 10°, through the stars in the head of the Great Bear towards the NNE. point of the horizon. $15^m$. Faint streamers to NNE. $18^m$. Auroral bank rather bright to NW. $50^m$. Aurora still visible, but faint. |
| | | 9 | 30. | Aurora still visible. $11^h$ $40^m$. Auroral light still visible. |
| | | 12 | 20. | Aurora still visible. A shooting-star fell vertically from an altitude of 20° above NNW. point of horizon. $13^h$ $10^m$. Mass of clouds to north, about 10° altitude. Auroral light seen above them. $13^h$ $25^m$. Sky covered with clouds and haze, excepting about 0·5 to south. |
| Nov. | 12 | 13 | 35. | Auroral light seen between patches of clouds to north? |
| Nov. | 13 | 10 | 10. | Very faint auroral light? |
| Nov. | 16 | 10 | 35. | Diffuse auroral arch seen. $38^m$. Auroral arch 8° altitude, flickering. $41^m$–$42^m$. Bright and varying auroral patches, especially to NNW.; streamers to north; clouds hide a portion. $48^m$. Bright auroral patch to N by E., altitude 10°. $55^m$. Arch 5° altitude, not bright. |
| | | 11 | 0. | Aurora seen between scud and cirro-stratus. $23^m$. Overcast. |
| Nov. | 17 | 12 | 30. | Sky clear, moon setting, no aurora visible. |
| Nov. | 18 | 9 | 5. | Very faint auroral light to N. and E. |
| Nov. | 23 | 8 | | See an account, among the Additional Meteorological Notes, of remarkable varying streaks, resembling auroral bands, which were observed *after* a magnetic disturbance of this date. Similar streaks were also observed Nov. $24^d$ $8^h$. |
| Nov. | 24 | 12 | 40. | Star shot from zenith to the west. $45^m$. Portion of an ill-formed auroral arch, extending from W ½ N. to NNW., where its altitude was 10°, stopping at that point. It was first noticed at this time, grew faint, reappeared with greater brightness and breadth, 5° at the broadest, disappeared about $55^m$? and was not seen afterwards. The moon was totally eclipsed at this time and appeared quite red. At $53^m$ a star shot from 40° altitude due SSW. |

## NOTES ON THE AURORÆ BOREALES.

| | d. | h. | m. | |
|---|---|---|---|---|
| Nov. | 24 | 14 | 6. | Star shot from near zenith to NNE. Band of cirrus to east, lying nearly S by W. and N by E.? Faint auroral light to north? |
| Dec. | 4 | 8 | 5. | Faint auroral light to NNW.; a shooting-star to north at $7^h$ $58^m$ moving northwestwards. $11^h$ $5^m$. Auroral light to NNW. $25^m$. Auroral light becoming fainter. $40^m$. Auroral light very faint. |
| Dec. | 29 | 10 | | (Sunday evening.) Brilliant aurora seen by me first at this time, it had been seen sometime before by Mr Hogg, and shortly before by Mr Welsh. At $10^h$ Mr W. conceived the centre of the auroral arch to be nearly north. |
| | | | | The only clouds were to north, almost covering the aurora; they stretched in a series of belts or arches from about WNW. to E. The extremity to east had a sort of cycloidal rise, similar to what I have before observed in auroral arches. |
| | | | 25. | The moon apparently rising due east; at an altitude of about 15° above it, and at the edge of the cirrous clouds, spring a series of streamers lying *en echelon*, they reach about as far as 45° above the SE. At some times it was imagined that the streamers were seen *below* the cirrous cloud, but as the cloud was thin the streamers were probably only seen *through* it. |
| | | | 30. | The streamers rising from the east, where the moon has now risen, are inclined at an angle of about 30° to the south of the prime vertical; they are seen as far as the meridian, where the streamer is joined by another rising from the SW. These streamers are at times in patches, pulsating and variable; those rising from east have now a more compact form. |
| | | | 35. | Faint auroral patches to SW. variable. |
| | | | 40–45. | The patches to SW., nearly radiate from that point, are varying in size and brightness, with occasional rapid pulsations; ultimately they took positions nearly horizontal, slightly (10°—20°) above the south point of horizon, but still pointing to about SW. In this position they were observed till after $11^h$, and were nearly stationary; indeed, had they not been closely watched during the whole period they would undoubtedly *now* have been taken for nebulous patches of cirri lighted by the moon. It is necessary to be particular on this point, as I have frequently seen similar appearances in which I could have no confidence as to whether they were auroral or not. In this case, however, they were seen from their formation varying in brightness and form with, *rarely*, rapid pulsations, until they were nearly stationary to south, without any auroral changes, although *slight* changes in position were observed after a considerable watching. |
| | | | | About $40^m$ the streamers to east became one bright pencil, moving slightly to south, its origin now pointing E ½ S., and the highest point bent like a hook to south. |
| | | | 40–45. | Two very bright falling stars seen to west, one moving from about 40° altitude west to about 20° altitude W by N., direction nearly to WNW; the other moving from about 70° altitude W by N. to 50°? altitude WSW., motion about SW. |
| | | | 50. | Falling star to south, 45° altitude, moving S. by E. among the streaks of aurora. |
| | | | | About $45^m$ pencils were seen rising from WNW. portion of the north arch, which was nearly all covered by cloud as before mentioned; bright specks could, however, be seen occasionally to NNE., and the extremity of the arch at WNW. was always seen. |
| | | | | It should be mentioned, that it was conceived that the aurora was always brighter to SW. than to the S. or WSW. |
| | | 13 | 10. | Patches of thin cirro-stratus, chiefly to east. Thin haze or cirri above, causing a small lunar corona. Aurora faint, probably from the moonlight. Bright patches near north horizon. Nebulous streaks and patches over the sky, which *may* be auroral, but the moonlight renders it doubtful; about $12^h$ patches or streaks were seen, having a strong resemblance to those seen previously to south. |
| | | | 35. | Auroral light very faint to north. |
| | | | | The aurora was observed by several persons before $8^h$ Göttingen, and was, according to them, very brilliant. Mr Welsh thought at $6^h$ Göttingen that there was an appearance of aurora to north, but conceived it might be a *twilight-effect*. |
| Dec. | 31 | 15 | 10. | The sky looks more milky to north than on other points. Aurora? |

# OBSERVATIONS OF MAGNETIC DIP.

MAKERSTOUN OBSERVATORY,

1844.

| Göttingen Mean Time, Middle of Observation. | Duration. | Needle. Number. | Needle. Temperature. | Needle. End dipping. | Face of Circle E. Mark on Needle E. | Face of Circle E. Mark on Needle W. | Face of Circle W. Mark on Needle E. | Face of Circle W. Mark on Needle W. | Mean. | Observed Dip. | Observer's Initial. |
|---|---|---|---|---|---|---|---|---|---|---|---|
| d. h. m. | m. | | ° | | ° ′ | ° ′ | ° ′ | ° ′ | ° ′ | ° ′ | |
| Jan. 3 2 50 | 55 | 2 | 42 | B | 72 9·0 | 71 26·0 | 71 44·0 | 71 3·0 | 71 35·50 | 71 27·12* | B |
| | | | | A | 71 5·5 | 72 2·0 | 70 41·5 | 71 26·0 | 71 18·75 | | |
| Jan. 6 4 40 | 35 | 2 | 45 | A | 71 4·0 | 72 3·5 | 70 38·0 | 71 29·5 | 71 18·75 | 71 27·69* | B |
| | | | | B | 72 10·5 | 71 26·5 | 71 47·0 | 71 2·5 | 71 36·63 | | |
| Jan. 8 22 25 | ... | 2 | 34 | B | 72 7·5 | 71 22·5 | 71 50·5 | 71 0·0 | 71 35·12 | 71 18·62† | W |
| | | | | A | 70 1·0 | 72 40·0 | 69 31·5 | 71 56·0 | 71 2·12 | | |
| Jan. 9 0 20 | 45 | 2 | ... | B | 72 10·0 | 71 15·5 | 72 3·0 | 70 53·0 | 71 35·37 | 71 22·68 | W |
| | | | | A | 70 8·0 | 72 31·0 | 69 57·0 | 72 4·0 | 71 10·00 | | |
| Jan. 12 4 0 | ... | 2 | 45 | A | 70 15·0 | 72 23·5 | 70 7·0 | 71 56·0 | 71 10·37 | 71 24·24 | W |
| | | | | B | 72 3·5 | 71 20·0 | 71 57·0 | 71 12·0 | 71 38·12 | | |
| Jan. 16 1 40 | ... | 2 | 38 | B | 72 4·5 | 71 20·0 | 72 0·5 | 71 8·0 | 71 38·25 | 71 25·75 | W |
| | | | | A | 70 25·5 | 72 30·5 | 70 5·0 | 71 52·0 | 71 13·25 | | |
| Jan. 30 0 30 | ... | 2 | 46 | A | 70 45·5† | 72 37·5 | 69 55·0 | 71 45·0 | 71 15·75 | 71 27·18 | B |
| | | | | B | 72 1·0 | 71 25·5 | 71 49·0 | 71 19·0 | 71 38·62 | | |
| Feb. 2 4 45 | ... | 2 | 38 | B | 72 3·0 | 71 21·5 | 71 55·5† | 71 6·0 | 71 36·50 | 71 24·50 | W |
| | | | | A | 70 21·5 | 72 46·0 | 69 36·0 | 72 6·5 | 71 12·50 | | |
| Feb. 5 23 30 | ... | 2 | 41 | A | 70 22·5 | 72 50·0 | 69 29·0 | 71 50·5 | 71 8·00 | 71 21·50† | W |
| | | | | B | 72 9·0 | 71 25·0 | 71 50·5 | 71 3·5 | 71 37·00 | | |
| Feb. 9 3 50 | 55 | 2 | 46 | B | 72 0·0 | 71 23·5 | 71 51·5 | 71 8·5 | 71 35·88 | 71 24·12 | W |
| | | | | A | 70 22·0 | 72 33·5 | 69 52·0 | 72 2·0 | 71 12·37 | | |
| Feb. 13 4 30 | 55 | 2 | 42 | A | 70 33·0 | 72 39·0 | 69 46·0 | 71 54·5 | 71 13·12 | 71 23·12 | W |
| | | | | B | 72 2·0 | 71 11·5 | 71 57·0 | 71 2·0 | 71 33·12 | | |
| Feb. 16 4 30 | 60 | 2 | 49 | B | 72 19·0 | 71 7·0 | 71 59·0 | 70 58·5 | 71 35·88 | 71 28·94 | B |
| | | | | A | 71 2·5 | 72 5·0 | 70 41·5 | 71 39·0† | 71 22·00 | | |
| Feb. 20 0 20 | 55 | 2 | 43 | A | 71 3·0 | 72 17·0 | 70 25·0 | 71 34·5 | 71 19·88 | 71 26·63* | W |
| | | | | B | 71 59·0 | 71 28·5 | 71 47·0 | 70 59·0 | 71 33·38 | | |
| Feb. 27 4 45 | 50 | 2 | 47 | B | 72 2·0 | 71 23·0 | 71 52·5 | 71 3·0 | 71 35·12 | 71 26·75* | W |
| | | | | A | 70 52·5 | 72 19·5 | 70 19·0 | 71 42·5 | 71 18·38 | | |
| Mar. 1 4 50 | ... | 2 | 49 | A | 70 47·5 | 72 20·5 | 70 22·0 | 72 2·5 | 71 23·12 | 71 34·12† | W |
| | | | | B | 72 29·0 | 71 17·0 | 72 32·0 | 70 42·5 | 71 45·12 | | |
| Mar. 5 23 50 | 90 | 2 | 48 | B | 72 47·0 | 71 16·5 | 72 17·5 | 70 41·0 | 71 45·50 | 71 34·19* | B |
| | | | | A | 71 13·5 | 72 13·5 | 70 36·5 | 71 28·0 | 71 22·88 | | |
| Mar. 11 23 20 | 55 | 2 | 45 | A | 71 8·0 | 72 13·5 | 70 28·0 | 71 29·0 | 71 19·62 | 71 29·12* | W |
| | | | | B | 72 37·5 | 71 7·0 | 72 22·0 | 70 28·0 | 71 38·62 | | |
| Mar. 19 0 15 | 50 | 2 | 58 | B | 72 47·0 | 71 5·0 | 72 23·5 | 70 48·5 | 71 46·00 | 71 34·00 | W |
| | | | | A | 70 57·0 | 72 20·5 | 70 21·5 | 71 49·0 | 71 22·00 | | |
| Mar. 22 4 25 | 50 | 2 | 51 | A | 71 0·5 | 72 19·0 | 70 19·5 | 71 43·0 | 71 20·50 | 71 30·94* | W |
| | | | | B | 72 38·5 | 71 12·0 | 72 20·5 | 70 34·5 | 71 41·38 | | |
| Mar. 26 1 25 | 65 | 2 | 65 | B | 73 2·5 | 71 7·0 | 72 31·5 | 70 34·5 | 71 48·88 | 71 34·38* | B |
| | | | | A | 71 8·0 | 72 10·5 | 70 35·0 | 71 26·0 | 71 19·88 | | |
| Apr. 2 0 15 | 55 | 2 | 54 | A | 71 6·0 | 72 15·5 | 70 33·5 | 71 55·0† | 71 27·50 | 71 33·44 | W |
| | | | | B | 72 30·0 | 71 17·5 | 72 9·5 | 70 40·5 | 71 39·38 | | |
| Apr. 4 4 35 | 50 | 2 | 46 | B | 72 33·5 | 71 24·0 | 72 9·5 | 70 42·0 | 71 42·25 | 71 31·44 | B |
| | | | | A | 71 2·0 | 72 21·5 | 70 24·0 | 71 35·0 | 71 20·63 | | |
| Apr. 8 23 20 | 55 | 2 | 58 | A | 70 58·0 | 72 17·0 | 70 33·0 | 71 36·0 | 71 21·00 | 71 33·87 | W |
| | | | | B | 72 45·5 | 71 15·5 | 72 25·5 | 70 40·5 | 71 46·75 | | |
| Apr. 12 4 50 | 45 | 2 | 49 | B | 72 53·0 | 71 10·5 | 72 23·0 | 70 22·0 | 71 42·13 | 71 27·50 | W |
| | | | | A | 70 52·0 | 72 35·5 | 69 49·0 | 71 35·0 | 71 12·87 | | |
| Apr. 22 23 50 | 45 | 2 | 59 | A | 70 49·5 | 72 34·5 | 69 43·0 | 71 33·0 | 71 10·00 | 71 26·37* | W |
| | | | | B | 73 6·5 | 71 8·0 | 72 22·0 | 70 14·5 | 71 42·75 | | |
| July 21 22 10 | 80 | 2 | 70 | B | 73 9·5 | 71 11·5 | 72 20·0 | 70 30·0 | 71 47·75 | 71 36·31 | W |
| | | | | A | 70 59·5 | 72 23·5 | 70 22·0 | 71 54·5 | 71 24·87 | | |
| July 30 1 20 | 40 | 2 | 58 | A | 71 5·5 | 72 27·5 | 70 5·5 | 71 37·0 | 71 18·87 | 71 25·12 | B |
| | | | | B | 71 59·5 | 71 24·0 | 71 45·0 | 70 57·0 | 71 31·38 | | |
| July 30 2 5 | 40 | 1 | 58 | B | 74 35·0 | 70 33·5 | 73 55·0 | 69 55·0 | 72 14·62 | 71 25·18 | B |
| | | | | A | 68 37 0 | 72 57·0 | 68 26·0 | 72 23·0 | 70 35·75 | | |

* Observations considered good. † Observations considered bad or doubtful.

Jan. 3d. Good observation. All the readings verified, as usual, by repeatedly lifting and lowering the needle.
Jan. 9d. In changing the poles the needle lay very unsteadily on the block, so that the axle may have been injured.
Jan. 10d. After the needle is lowered by the Ys it often leaps one or two degrees, producing a large arc of vibration, but without altering the mean position.
Jan. 17d. Discovered a piece of the velvet loose at the bottom of the door of the inclinometer, which had wedged the door too tightly when shut, and thus probably affected the level of the instrument.
Jan. 30d. Several bad readings, especially under A dipping.
Feb. 6d. Observation not satisfactory; in some of the readings the needle does not move freely, owing, probably, to the great deposition of moisture on the [instrument.
Feb. 16d. Observation fair, excepting (†), which is considered *within* 5′ of the truth.
April 4d. Levelled the instrument, needle vibrating; fair observation.

| Göttingen Mean Time, Middle of Observation. | Duration. | Needle. | | | Face of Circle E. | | Face of Circle W. | | Mean. | Observed Dip. | Observer's Initial. |
|---|---|---|---|---|---|---|---|---|---|---|---|
| | | Number. | Temperature. | End dipping. | Mark on Needle E. | Mark on Needle W. | Mark on Needle E. | Mark on Needle W. | | | |
| d. h. m. | m. | | ° | | ° ′ | ° ′ | ° ′ | ° ′ | ° ′ | ° ′ | |
| Aug. 1 22 35 | 25 | 2 | 71 | B | 72 11·0 | 71 23·5 | 71 40·0 | 70 57·5 | 71 33·00 | 71 27·03 | W |
| Aug. 2 4 40 | 20 | 2 | 71 | B | 72 8·5 | 71 25·5 | 71 53·0 | 70 51·5 | 71 34·62 | | |
| Aug. 5 22 30 | 25 | 2 | 57 | A | 71 3·0 | 72 33·0 | 70 3·0 | 71 38·0 | 71 19·25 | | W |
| Aug. 6 4 30 | 20 | 2 | 61 | A | 71 4·5 | 72 33·0 | 70 9·5 | 71 38·0 | 71 21·25 | | |
| Aug. 8 22 45 | 20 | 2 | 63 | B | 72 21·5 | 71 25·5 | 71 46·0 | 70 51·5 | 71 36·12* | 71 29·09 | W |
| Aug. 9 4 44 | 18 | 2 | 63 | B | 72 22·0 | 71 26·0 | 71 45·5 | 70 50·5 | 71 36·00* | | |
| Aug. 13 0 45 | 43 | 2 | 72 | A | 70 56·5 | 72 32·5 | 70 7·5 | 71 44·0 | 71 20·12 | | B |
| Aug. 13 4 45 | 23 | 2 | 70 | A | 70 56·5 | 72 29·5 | 70 10·0 | 72 0·5† | 71 24·12 | | |
| Aug. 15 23 20 | 30 | 2 | 78 | B | 72 0·0 | 71 31·0 | 71 35·5 | 71 6·5 | 71 33·25 | 71 28·00 | B |
| Aug. 16 4 50 | 15 | 2 | 67 | B | 71 58·5 | 71 30·0 | 71 35·0 | 71 6·5 | 71 32·50* | | |
| Aug. 19 22 45 | 15 | 2 | 70 | A | 71 17·0 | 72 15·0 | 70 28·0 | 71 37·5 | 71 24·37 | | W |
| Aug. 20 4 45 | 20 | 2 | ... | A | 71 13·0 | 72 9·0 | 70 36·0 | 71 29·5 | 71 21·88 | | |
| Aug. 22 23 45 | 20 | 2 | 66 | B | 72 9·5 | 71 33·0 | 71 40·0 | 71 6·0 | 71 37·12 | 71 30·71 | B |
| Aug. 23 4 40 | 15 | 2 | 66 | B | 72 8·0 | 71 34·5 | 71 34·0 | 70 58·5 | 71 33·75 | | |
| Aug. 27 22 40 | 25 | 2 | 77 | A | 71 21·5 | 72 9·5 | 70 42·0 | 71 32·5 | 71 26·37 | | B |
| Aug. 28 4 45 | 20 | 2 | 80 | A | 71 17·5 | 72 7·5 | 70 52·0 | 71 25·5 | 71 25·62† | | |
| Sept. 3 0 0 | 25 | 2 | 79 | B | 72 0·5 | 71 30·0 | 71 33·0 | 71 1·5 | 71 31·25 | 71 24·56 | W |
| Sept. 3 4 45 | 20 | 2 | 77 | B | 72 1·0 | 71 28·5 | 71 34·5 | 71 2·0 | 71 31·50 | | |
| Sept. 5 22 30 | 20 | 2 | 62 | A | 71 0·5 | 72 29·5 | 70 8·0 | 71 37·0 | 71 18·75 | | W |
| Sept. 6 4 50 | 30 | 2 | 65 | A | 70 55·5 | 72 35·0 | 69 58·5 | 71 38·0 | 71 16·75 | | |
| Sept. 5 23 0 | 20 | 1 | 64 | A | 68 39·0 | 72 59·0 | 68 21·0 | 72 37·5 | 70 39·12 | 71 29·40 | W |
| Sept. 6 4 25 | 18 | 1 | 64 | A | 68 37·5 | 72 58·5 | 68 18·5 | 72 35·5 | 70 37·50 | | |
| Sept. 9 23 55 | 20 | 2 | 64 | B | 72 10·0 | 71 31·0 | 71 43·0 | 70 57·0 | 71 35·25 | 71 29·50 | B |
| Sept. 10 1 15 | 20 | 2 | 64 | A | 71 14·0 | 72 16·0 | 70 30·0 | 71 35·0 | 71 23·75 | | |
| Sept. 10 0 25 | 25 | 1 | 62 | B | 75 21·5 | 70 0·0 | 74 59·0 | 69 26·0 | 72 26·62 | 71 33·87† | B |
| Sept. 10 0 50 | 20 | 1 | 62 | A | 68 42·0 | 72 59·0 | 68 21·0 | 72 42·5 | 70 41·12 | | |
| Sept. 10 6 40 | 20 | 2 | 59 | A | 71 11·5 | 72 14·0 | 70 29·5 | 71 29·0 | 71 21·00 | 71 28·37* | B |
| Sept. 12 23 40 | 25 | 2 | 64 | B | 72 20·0 | 71 19·5 | 71 49·0 | 70 54·5 | 71 35·75 | | |
| Sept. 13 22 20 | 20 | 2 | 50 | B | 72 22·0 | 71 20·5 | 71 42·5 | 70 49·0 | 71 33·50 | 71 25·65 | W |
| Sept. 14 4 40 | 15 | 2 | 54 | B | 72 18·0 | 71 23·0 | 71 48·0 | 70 45·5 | 71 33·62 | | |
| Sept. 17 0 15 | 15 | 2 | 52 | A | 71 12·5 | 72 27·5 | 70 10·5 | 71 20·5 | 71 17·75 | | W |
| Sept. 17 4 45 | 18 | 2 | 53 | A | 71 13·5 | 72 27·5 | 70 7·5 | 71 22·5 | 71 17·75 | | |
| Sept. 19 22 50 | 17 | 2 | 62 | B | 72 27·5 | 71 26·0 | 71 47·0 | 70 53·0 | 71 38·37 | 71 27·81 | W |
| Sept. 20 4 45 | 17 | 2 | 61 | B | 72 23·0 | 71 24·0 | 71 46·0 | 70 49·0 | 71 35·50 | | |
| Sept. 23 23 15 | 20 | 2 | 67 | A | 71 9·0 | 72 22·0 | 70 13·0 | 71 27·0 | 71 17·75 | | W |
| Sept. 24 4 45 | 15 | 2 | 71 | A | 71 10·5 | 72 20·0 | 70 21·0 | 71 27·0 | 71 19·62 | | |
| Sept. 26 23 5 | 25 | 2 | 68 | B | 72 30·0 | 71 31·0 | 71 46·5 | 70 56·0 | 71 40·87 | 71 28·59 | W |
| Sept. 27 4 50 | 20 | 2 | 69 | B | 72 23·5 | 71 30·0 | 71 43·5 | 70 56·5 | 71 38·37 | | |
| Oct. 3 22 50 | 16 | 2 | 52 | A | 71 17·0 | 72 20·5 | 70 14·0 | 71 21·5 | 71 18·25 | | W |
| Oct. 4 4 50 | 20 | 2 | 54 | A | 71 10·0 | 72 20·5 | 70 14·5 | 71 22·5 | 71 16·87 | | |
| Oct. 7 23 15 | 20 | 2 | 48 | B | 72 54·0 | 71 15·5 | 72 4·0 | 70 30·0 | 71 40·87 | 71 25·78 | W |
| Oct. 8 4 45 | 20 | 2 | 52 | B | 72 52·0 | 71 11·0 | 72 5·0 | 70 36·0 | 71 41·00 | | |
| Oct. 10 23 35 | 25 | 2 | 60 | A | 70 48·5 | 72 41·0 | 69 40·5 | 71 30·5 | 71 10·12 | | W |
| Oct. 11 4 55 | 20 | 2 | 57 | A | 70 47·5 | 72 41·0 | 69 43·0 | 71 33·0 | 71 11·12 | | |
| Oct. 18 0 10 | 25 | 2 | 58 | B | 72 24·0 | 71 22·0 | 71 56·0 | 70 52·5 | 71 38·62 | 71 29·59 | B |
| Oct. 18 23 35 | 20 | 2 | 42 | B | 72 35·0 | 71 21·0 | 71 48·0 | 70 43·5 | 71 36·87 | | |
| Oct. 21 22 50 | 17 | 2 | 43 | A | 71 21·0 | 72 11·5 | 70 28·5 | 71 17·5 | 71 19·62 | | W |
| Oct. 22 4 55 | 20 | 2 | 62 | A | 71 18·0 | 72 10·0 | 70 44·0 | 71 21·0 | 71 23·25 | | |
| Oct. 24 23 0 | 32 | 2 | 50 | B | 72 48·5 | 71 20·0 | 71 57·5 | 70 36·5 | 71 40·62 | 71 29·15 | W |
| Oct. 25 4 50 | 18 | 2 | 50 | B | 72 44·0 | 71 19·0 | 71 57·5 | 70 42·0 | 71 40·62 | | |
| Oct. 28 23 0 | 25 | 2 | 44 | A | 71 6·0 | 72 35·0 | 69 58·0 | 71 25·0 | 71 16·00 | | W |
| Oct. 29 4 50 | ... | 2 | 47 | A | 71 2·0 | 72 35·5 | 70 9·0 | 71 31·0 | 71 19·37 | | |
| Oct. 31 22 55 | 40 | 2 | 49 | B | 73 2·0 | 71 13·5 | 72 9·5 | 70 35·5 | 71 45·12 | 71 32·56 | W |
| Nov. 1 4 55 | 22 | 2 | 46 | B | 73 3·5 | 71 14·0 | 72 8·5 | 70 30·5 | 71 44·12 | | |
| Nov. 7 23 55 | 55 | 2 | 47 | A | 71 18·0 | 72 22·0 | 70 16·0 | 71 27·0 | 71 20·75† | | |
| Nov. 8 23 45 | 24 | 2 | 51 | A | 71 8·5 | 72 28·0 | 70 20·5 | 71 27·0 | 71 21·00 | | B |
| Nov. 9 4 30 | 25 | 2 | 50 | A | 71 9·5 | 72 20·0 | 70 20·5 | 71 29·0 | 71 19·75 | | |

* Observations considered good. † Observations considered bad or doubtful.

Sept. 5d—6d. The dip deduced for needle No. 1. has been obtained by applying a correction of 51′·09 to the mean A dipping: the correction being half the difference of the observations for A and for B dipping, made July 30d and Sept. 10d.

Oct. 31d. Before this observation the level of the instrument was adjusted.

Nov. 7d. Unsatisfactory observation; the instrument quite damp, and the needle scarcely ceases to vibrate.

| Göttingen Mean Time, Middle of Observation. | Duration. | Needle. | | | Face of Circle E. | | Face of Circle W. | | Mean. | Observed Dip. | Observer's Initial. |
|---|---|---|---|---|---|---|---|---|---|---|---|
| | | Number. | Temperature. | End dipping. | Mark on Needle E. | Mark on Needle W. | Mark on Needle E. | Mark on Needle W. | | | |
| d. h. m. | m. | | ° | | ° ′ | ° ′ | ° ′ | ° ′ | ° ′ | ° ′ | |
| Nov. 11 23 20 | 78 | 2 | 44 | B | 72 23·0 | 71 20·5 | 71 50·0 | 70 45·0 | 71 34·62 | 71 27·93 | B |
| | | | | A | 71 19·5 | 72 14·5 | 70 29·0 | 71 22·0 | 71 21·25 | | |
| Nov. 14 22 55 | 40 | 2 | 53 | A | 71 17·0 | 72 16·0 | 70 31·0 | 71 24·0 | 71 22·00* | 71 35·59 | W |
| Nov. 15 4 45 | 23 | 2 | 50 | A | 71 15·5 | 72 12·0 | 70 31·5 | 71 23·5 | 71 20·62 | | |
| Nov. 18 23 45 | 60 | 2 | 51 | B | 73 4·0 | 71 27·0 | 72 23·5 | 70 31·5 | 71 51·50† | | W |
| Nov. 19 4 10 | 30 | 2 | 52 | B | 73 10·5 | 71 10·5 | 72 23·0 | 70 29·0 | 71 48·25 | | |
| Nov. 21 22 35 | 34 | 2 | 32 | B | 73 28·0 | 71 21·5 | 72 4·5 | 70 14·0 | 71 47·00 | 71 35·50 | W |
| Nov. 21 23 25 | 54 | 2 | 34 | A | 71 23·0 | 72 29·0 | 70 19·0 | 71 27·5 | 71 24·62 | | |
| | | | | A | 71 15·0 | 72 30·5 | 70 21·0 | 71 27·0 | 71 23·38 | | |
| Nov. 22 0 30 | 30 | 2 | 35 | B | 74 18·0 | 71 12·0 | 72 34·0 | 69 42·0 | 71 56·50† | | W |
| Nov. 28 23 25 | 35 | 2 | 47 | B | 73 59·0 | 70 45·0 | 72 43·0 | 69 41·5 | 71 47·12 | 71 33·56 | W |
| Nov. 29 3 55 | 25 | 2 | 44 | B | 74 1·0 | 70 52·5 | 72 35·5 | 69 45·5 | 71 48·62 | | |
| Dec. 2 22 50 | 23 | 2 | 36 | A | 71 4·5 | 72 34·0 | 70 7·0 | 71 33·0 | 71 19·62 | | W |
| Dec. 3 4 10 | 25 | 2 | 38 | A | 71 3·0 | 72 27·0 | 70 11·5 | 71 34·0 | 71 18·87 | | |
| Dec. 5 23 10 | 25 | 2 | 23 | B | 73 0·0 | 71 24·0 | 72 2·5 | 70 26·5 | 71 43·25 | 71 30·09 | W |
| Dec. 6 4 10 | ... | 2 | 27 | B | 72 52·0 | 71 25·0 | 71 58·5 | 70 31·5 | 71 41·75 | | |
| Dec. 10 23 20 | 15 | 2 | 32 | A | 71 0·5 | 72 43·0 | 69 52·5 | 71 36·0 | 71 18·00† | | B |
| Dec. 11 4 50 | 40 | 2 | 34 | A | 70 56·0 | 72 46·0 | 69 53·5 | 71 34·0 | 71 17·37 | | |
| Dec. 14 1 5 | 20 | 2 | 36 | B | 72 6·0 | 71 32·0 | 71 31·0 | 70 58·0 | 71 31·75 | 71 26·18 | B |
| Dec. 14 4 55 | 35 | 2 | 36 | B | 72 3·5 | 71 34·0 | 71 33·0 | 70 59·0 | 71 32·37 | | |
| Dec. 16 22 35 | 25 | 2 | 38 | A | 71 11·5 | 72 14·0 | 70 29·5 | 71 28·0 | 71 20·75 | | W |
| Dec. 17 4 45 | 23 | 2 | 40 | A | 71 9·5 | 72 14·5 | 70 30·0 | 71 25·5 | 71 19·87 | | |
| Dec. 19 23 40 | 35 | 2 | 27 | B | 72 40·5 | 71 26·0 | 71 46·5 | 70 36·0 | 71 37·25 | 71 28·53 | W |
| Dec. 20 4 35 | 25 | 2 | 27 | B | 72 40·0 | 71 24·5 | 71 47·0 | 70 38·0 | 71 37·37 | | |
| Dec. 23 22 25 | 22 | 2 | 33 | A | 71 10·0 | 72 17·5 | 70 20·5 | 71 32·0 | 71 20·00 | | W |
| Dec. 24 4 30 | ... | 2 | 32 | A | 71 11·5 | 72 20·5 | 70 19·5 | 71 26·5 | 71 19·50 | | |
| Dec. 26 22 20 | 23 | 2 | 33 | B | 72 27·5 | 71 29·0 | 71 43·5 | 70 47·0 | 71 36·75 | 71 28·28 | W |
| Dec. 27 4 20 | 25 | 2 | 35 | B | 72 27·5 | 71 25·5 | 71 45·5 | 70 50·5 | 71 37·25 | | |
| Dec. 31 0 30 | 25 | 2 | 40 | A | 70 53·0 | 72 41·0 | 69 56·5 | 71 32·0 | 71 15·62 | | B |
| Dec. 31 4 45 | 25 | 2 | 38 | A | 71 2·0 | 72 44·0 | 70 8·0 | 71 40·0 | 71 23·50 | | |

* Observations considered good. † Observations considered bad or doubtful.
Nov. 20d. First reading uncertain to 20′; instrument in bad order.

# OBSERVATIONS

FOR THE

# ABSOLUTE HORIZONTAL INTENSITY.

MAKERSTOUN OBSERVATORY,
1844.

| Göttingen Mean Time of Observation. | | | Deflecting Bar. Distance = r. | | N. End. | Temperature. | Declinometer. Observed Reading. | Reduced to Unifilar. | Unifilar Reading. | Deflection corrected for Torsion. | Bifilar. Reading Corrected. | Thermometer. | Log. $\frac{1}{2} r^3 \tan. u$. |
|---|---|---|---|---|---|---|---|---|---|---|---|---|---|
| d. | h. | m. | Feet. | | | ° | Sc. Div. | Sc. Div. | Sc. Div. | ° ′ ″ | Sc. Div. | ° | |
| Feb. 17 | 3 | 42 | 5·000 | E | E | 42·5 | 3·16 | 3·53 | 497·54 | 2 36 34·6 | 524·8 | 42·8 | 0·4543417 |
| | 4 | 6 | | | W | 41·0 | 3·02 | 3·36 | 33·97 | | 522·8 | 42·8 | |
| | 4 | 13 | | W | E | 41·0 | 3·00 | 3·34 | 498·01 | | 523·3 | 42·8 | |
| | 4 | 31 | | | W | 41·0 | 3·36 | 3·75 | 32·48 | | 522·3 | 42·9 | |
| | 3 | 55 | 6·750 | E | E | 41·0 | 3·70 | 4·12 | 361·23 | 1 3 59·1 | 520·1 | 42·8 | 0·4562960 |
| | 3 | 59 | | | W | 41·0 | 3·37 | 3·76 | 171·27 | | 522·0 | 42·8 | |
| | 4 | 20 | | W | E | 40·5 | 2·74 | 3·05 | 360·13 | | 523·3 | 42·9 | |
| | 4 | 25 | | | W | 41·0 | 3·02 | 3·36 | 170·25 | | 522·3 | 42·9 | |
| | | | | | | | | | | (Diff.) Sc. Div. | | | |
| | 1 | 48 | Magnet away | | | | 1·38 | 1·54 | 263·20 | 261·66 | | | |
| | 2 | + ? | | | | | 0·33 | 0·36 | 261·90 | 261·54 | | | |
| | 3 | 8 | | | | | 3·07 | 3·42 | 265·46 | 262·04 | | | |
| | 4 | 40 ? | | | | | 3·93 | 4·38 | 266·58 | 262·20 | | | |
| Mar. 23 | 2 | 8 | 5·125 | E | E | 47·7 | 1·43 | 1·59 | 475·21 | 2 25 35·5 | 515·7 | 43·1 | 0·4551536 |
| | 2 | 43 | | | W | 47·4 | 2·22 | 2·47 | 44·75 | | 517·3 | 43·4 | |
| | 3 | 23 | | W | E | 46·5 | 3·04 | 3·38 | 477·72 | | 523·0 | 43·8 | |
| | 2 | 49 | | | W | 47·7 | 2·53 | 2·82 | 44·36 | | 516·8 | 43·4 | |
| | 2 | 15 | 5·500 | E | E | 47·8 | 1·55 | 1·72 | 434·46 | 1 57 57·3 | 515·5 | 43·1 | 0·4556571 |
| | 2 | 38 | | | W | 47·0 | 2·05 | 2·28 | 85·50 | | 516·9 | 43·3 | |
| | 3 | 19 | | W | E | 46·7 | 3·03 | 3·37 | 436·81 | | 522·9 | 43·8 | |
| | 2 | 53 | | | W | 48·0 | 2·74 | 3·05 | 85·92 | | 517·2 | 43·5 | |
| | 2 | 21 | 6·750 | E | E | 48·0 | 1·80 | 2·01 | 354·74 | 1 4 2·6 | 515·4 | 43·1 | 0·4571052 |
| | 2 | 33 | | | W | 47·0 | 2·04 | 2·27 | 165·26 | | 516·6 | 43·3 | |
| | 3 | 14 | | W | E | 46·8 | 2·93 | 3·26 | 356·62 | | 522·0 | 43·7 | |
| | 2 | 58 | | | W | 47·5 | 2·93 | 3·26 | 166·24 | | 518·4 | 43·6 | |
| | 2 | 25 | 7·250 | E | E | 48·0 | 1·86 | 2·08 | 336·50 | 0 51 39·4 | 516·2 | 43·2 | 0·4568422 |
| | 2 | 29 | | | W | 46·8 | 1·93 | 2·15 | 183·43 | | 516·1 | 43·2 | |
| | 3 | 9 | | W | E | 47·0 | 2·88 | 3·21 | 338·27 | | 521·2 | 43·7 | |
| | 3 | 2 | | | W | 47·0 | 2·90 | 3·23 | 184·84 | | 519·7 | 43·6 | |
| | | | | | | | | | | (Diff.) Sc. Div. | | | |
| | 1 | 51 | Magnet away | | | | 1·42 | 1·58 | 259·29 | 257·71 | | | |
| | 3 | 35 | | | | | 3·25 | 3·62 | 262·33 | 258·71 | | | |
| May 29 | 7 | 49 | 5·125 | E | E | 46·9 | 2·25 | 2·50 | 457·66 | 2 23 4·1 | 541·8 | 52·6 | 0·4471880 |
| | 7 | 20 | | | W | 48·0 | 1·91 | 2·13 | 34·93 | | 539·7 | 52·7 | |
| | 7 | 57 | | W | E | 46·7 | 2·65 | 2·95 | 459·79 | | 540·6 | 52·6 | |
| | 8 | 27 | | | W | 46·7 | 4·47 | 4·98 | 35·02 | | 540·4 | 52·6 | |
| | 7 | 44 | 5·500 | E | E | 47·0 | 2·20 | 2·45 | 417·40 | 1 55 52·5 | 542·1 | 52·6 | 0·4475474 |
| | 7 | 25 | | | W | 47·7 | 2·01 | 2·24 | 74·96 | | 540·2 | 52·6 | |
| | 8 | 1 | | W | E | 46·3 | 2·71 | 3·02 | 419·39 | | 540·8 | 52·6 | |
| | 8 | 22 | | | W | 46·7 | 4·05 | 4·51 | 75·35 | | 540·4 | 52·6 | |
| | 7 | 41 | 6·750 | E | E | 47·1 | 2·21 | 2·46 | 339·13 | 1 2 52·4 | 541·7 | 52·6 | 0·4487191 |
| | 7 | 29 | | | W | 47·5 | 2·04 | 2·27 | 153·13 | | 540·6 | 52·6 | |
| | 8 | 4 | | W | E | 46·0 | 2·57 | 2·87 | 340·42 | | 541·2 | 52·6 | |
| | 8 | 17 | | | W | 46·7 | 2·85 | 3·17 | 153·36 | | 540·3 | 52·6 | |
| | 7 | 37 | 7·250 | E | E | 47·2 | 2·32 | 2·58 | 321·51 | 0 50 48·4 | 541·2 | 52·6 | 0·4492531 |
| | 7 | 33 | | | W | 47·3 | 2·15 | 2·39 | 171·15 | | 541·5 | 52·6 | |
| | 8 | 8 | | W | E | 46·3 | 2·52 | 2·81 | 322·36 | | 540·8 | 52·6 | |
| | 8 | 13 | | | W | 46·3 | 2·50 | 2·79 | 170·96 | | 539·7 | 52·6 | |
| | | | | | | | | | | (Diff.) Sc. Div. | | | |
| | 7 | 5 | Magnet away | | | | 1·75 | 1·94 | 245·56 | 243·62 | | | |
| | 8 | 36 | | | | | 6·30 | 7·02 | 250·86 | 243·84 | | | |
| Aug. 5 | 3 | 29 | 5·125 | E | E | 70·5 | 8·96 | 9·99 | 453·29 | 2 23 3·2 | 534·6 | 60·8 | 0·4485029 |
| | 2 | 44 | | | W | 73·2 | 8·13 | 9·06 | 28·31 | | 541·5 | 60·3 | |
| | 3 | 44 | | W | E | 78·0 | 10·60 | 11·81 | 455·77 | | 534·5 | 60·9 | |
| | 4 | 15 | | | W | 70·8 | 12·11 | 13·50 | 32·43 | | 547·7 | 61·7 | |
| | 3 | 25 | 5·250 | E | E | 70·0 | 9·45 | 10·53 | 439·31 | 2 13 9·9 | 532·8 | 60·7 | 0·4485438 |
| | 2 | 49 | | | W | 73·9 | 8·12 | 9·05 | 43·05 | | 541·5 | 60·4 | |
| | 3 | 47 | | W | E | 74·8 | 11·28 | 12·57 | 441·81 | | 531·6 | 61·0 | |
| | 4 | 10 | | | W | 71·7 | 12·49 | 13·92 | 47·56 | | 542·3 | 61·6 | |

| Göttingen Mean Time of Observation. | | | Deflecting Bar. Distance = r. | | N. End. | Temperature. | Declinometer. Observed Reading. | Reduced to Unifilar. | Unifilar Reading. | Deflection corrected for Torsion. | Bifilar. Reading Corrected. | Thermometer. | Log. $\frac{1}{2} r^3 \tan. u$. |
|---|---|---|---|---|---|---|---|---|---|---|---|---|---|
| d. | h. | m. | Feet. | | | ° | Sc. Div. | Sc. Div. | Sc. Div. | ° ′ ″ | Sc. Div. | ° | |
| Aug. 5 | 3 | 20 | 6·750 | E | E | 70·8 | 9·16 | 10·21 | 334·69 | 1 2 53·4 | 531·6 | 60·6 | 0·4498550 |
| | 3 | 5 | | | W | 74·7 | 8·70 | 9·70 | 147·80 | | 535·0 | 60·5 | |
| | 3 | 52 | | W | E | 73·9 | 11·34 | 12·64 | 337·71 | | 533·3 | 61·1 | |
| | 4 | 5 | | | W | 72·0 | 11·78 | 13·13 | 151·29 | | 536·9 | 61·5 | |
| | 3 | 16 | 6·875 | E | E | 72·0 | 9·13 | 10·17 | 329·62 | 0 59 31·3 | 531·8 | 60·7 | 0·4497280 |
| | 3 | 9 | | | W | 74·5 | 8·66 | 9·66 | 152·74 | | 534·7 | 60·6 | |
| | 3 | 55 | | W | E | 72·3 | 10·66 | 11·88 | 331·94 | | 531·7 | 61·2 | |
| | 4 | 0 | | | W | 71·7 | 11·79 | 13·14 | 156·28 | | 532·3 | 61·3 | |
| | | | | | | | | | | (Diff.) Sc. Div. | | | |
| | 2 | 28 | Magnet away | | | | 8·13 | 9·06 | 239·80 | 230·74 | | | |
| | 4 | 22 | | | | | 12·23 | 13·63 | 231·61 | 231·61 | | | |
| Dec. 26 | 2 | 53 | 5·083̇ | E | E | 33·2 | 5·64 | 6·28 | 465·38 | 2 29 6·2 | 538·8 | 33·0 | 0·4547844 |
| | 1 | 59 | | | W | 33·9 | 2·31 | 2·57 | 18·69 | | 538·5 | 33·0 | |
| | 3 | 10 | | W | E | 33·1 | 6·14 | 6·84 | 465·18 | | 538·4 | 33·0 | |
| | 3 | 49 | | | W | 33·0 | 6·65 | 7·41 | 23·75 | | 538·6 | 33·0 | |
| | 2 | 48 | 5·250 | E | E | 33·3 | 4·97 | 5·54 | 444·14 | 2 15 25·5 | 539·4 | 33·0 | 0·4550289 |
| | 2 | 3 | | | W | 33·9 | 2·27 | 2·53 | 39·02 | | 538·2 | 33·0 | |
| | 3 | 13 | | W | E | 33·1 | 6·13 | 6·83 | 445·24 | | 539·3 | 33·0 | |
| | 3 | 45 | | | W | 33·0 | 7·02 | 7·82 | 44·53 | | 540·6 | 33·0 | |
| | 2 | 39 | 5·500 | E | E | 33·5 | 4·55 | 5·07 | 417·74 | 1 58 9·8 | 538·3 | 33·0 | 0·4563633 |
| | 2 | 7 | | | W | 33·8 | 2·67 | 2·98 | 65·53 | | 538·4 | 33·0 | |
| | 3 | 16 | | W | E | 33·1 | 6·39 | 7·12 | 419·25 | | 539·3 | 33·0 | |
| | 3 | 42 | | | W | 33·0 | 6·86 | 7·65 | 70·56 | | 541·3 | 33·0 | |
| | 2 | 33 | 9·708̇3 | E | E | 33·6 | 4·01 | 4·47 | 273·96 | 0 21 31·7 | 539·2 | 33·0 | 0·4571025 |
| | 2 | 14 | | | W | 33·8 | 3·15 | 3·51 | 209·06 | | 538·7 | 33·0 | |
| | 3 | 21 | | W | E | 33·1 | 6·65 | 7·41 | 276·98 | | 539·3 | 33·0 | |
| | 3 | 37 | | | W | 33·0 | 6·97 | 7·77 | 213·50 | | 541·2 | 33·0 | |
| | 2 | 28 | 9·833̇ | E | E | 33·7 | 3·98 | 4·44 | 272·81 | 0 20 44·2 | 539·0 | 33·0 | 0·4574861 |
| | 2 | 17 | | | W | 33·7 | 3·39 | 3·78 | 210·52 | | 538·6 | 33·0 | |
| | 3 | 24 | | W | E | 33·0 | 6·62 | 7·38 | 275·70 | | 539·8 | 33·0 | |
| | 3 | 34 | | | W | 33·0 | 7·03 | 7·83 | 214·70 | | 540·9 | 33·0 | |
| | 2 | 25 | 10·250 | E | E | 33·7 | 3·70 | 4·12 | 268·77 | 0 18 17·4 | 539·7 | 33·0 | 0·4569860 |
| | 2 | 20 | | | W | 33·0 | 3·54 | 3·94 | 214·41 | | 538·9 | 33·0 | |
| | 3 | 27 | | W | E | 33·0 | 6·70 | 7·47 | 272·36 | | 539·3 | 33·0 | |
| | 3 | 31 | | | W | 33·0 | 6·91 | 7·70 | 218·22 | | 538·6 | 33·0 | |
| | | | | | | | | | | (Diff.) Sc. Div. | | | |
| | 1 | 43 | Magnet away | | | | 1·88 | 2·10 | 239·64 | 237·54 | | | |
| | 4 | 2 | | | | | 7·17 | 7·99 | 245·48 | 237·49 | | | |
| Dec. 30 | 1 | 47 | 5·083̇ | E | E | 41·6 | 5·97 | 6·66 | 467·98 | 2 29 7·2 | 533·1 | 36·0 | 0·4552963 |
| | 2 | 16 | | | W | 40·7 | 4·67 | 5·21 | 23·72 | | 536·1 | 36·0 | |
| | 1 | 38 | | W | E | 41·5 | 5·38 | 5·89 | 466·83 | | 535·2 | 36·0 | |
| | 1 | 3 | | | W | 40·8 | 0·96 | 1·07 | 19·74 | | 530·0 | 36·0 | |
| | 1 | 51 | 5·250 | E | E | 41·7 | 5·87 | 6·54 | 447·61 | 2 15 27·7 | 533·0 | 36·0 | 0·4555859 |
| | 2 | 13 | | | W | 40·9 | 5·35 | 5·96 | 44·79 | | 533·3 | 36·0 | |
| | 1 | 34 | | W | E | 41·4 | 5·08 | 5·66 | 446·50 | | 534·7 | 36·0 | |
| | 1 | 8 | | | W | 40·8 | 0·81 | 0·90 | 39·95 | | 534·1 | 36·0 | |
| | 1 | 55 | 9·708̇3 | E | E | 41·7 | 5·95 | 6·63 | 278·61 | 0 21 34·1 | 536·8 | 36·0 | 0·4582324 |
| | 2 | 9 | | | W | 41·4 | 5·39 | 6·01 | 213·76 | | 532·2 | 36·0 | |
| | 1 | 24 | | W | E | 41·3 | 4·70 | 5·24 | 277·45 | | 530·0 | 36·0 | |
| | 1 | 12 | | | W | 41·0 | 1·50 | 1·67 | 210·08 | | 529·6 | 36·0 | |
| | 1 | 55 | 9·833̇ | E | E | 41·8 | 5·57 | 6·21 | 276·92 | 0 20 46·8 | 535·1 | 36·0 | 0·4587297 |
| | 2 | 4 | | | W | 41·6 | 5·58 | 6·22 | 215·14 | | 533·8 | 36·0 | |
| | 1 | 21 | | W | E | 41·3 | 3·71 | 4·13 | 275·24 | | 530·2 | 36·0 | |
| | 1 | 15 | | | W | 41·2 | 2·65 | 2·95 | 212·51 | | 527·9 | 36·0 | |
| | | | | | | | | | | (Diff.) Sc. Div. | | | |
| | 0 | 33 | Magnet away | | | | 0·00 | 0·00 | 240·72 | 240·72 | | | |
| | 2 | 34 | | | | | 3·24 | 3·61 | 243·52 | 239·91 | | | |

| Date. | N. End of Magnet moving E. | | | | | N. End of Magnet moving W. | | | | | Bifilar. | | |
|---|---|---|---|---|---|---|---|---|---|---|---|---|---|
| | No. of Vib. | Time of Transit. | No. of Vib. | Time of Transit. | Time of one Vib. | No. of Vib. | Time of Transit. | No. of Vib. | Time of Transit. | Time of one Vib. | Time of Obs. | Reading Cor. | Thermometer. |
| | | h. m. s. | | h. m. s. | s. | | m. s. | | m. s. | s. | h. m. | Sc. Div. | ° |
| | 0 | 5 9 53·7 | 50 | 5 22 50·1 | 15·528 | 1 | 10 7·3 | 51 | 23 2·8 | 15·510 | 5 11 | 521·8 | |
| | 6 | 11 26·7 | 56 | 24 23·3 | 532 | 5 | 11 9·3 | 55 | 24 4·7 | 508 | 20 | 525·0 | 42·9 |
| | 10 | 12 29·0 | 60 | 25 25·3 | 526 | 11 | 12 42·6 | 61 | 25 37·8 | 504 | 25 | 525·9 | |
| | 16 | 14 2·2 | 66 | 26 58·4 | 524 | 15 | 13 44·5 | 65 | 26 39·6 | 502 | 30 | 525·9 | |
| | 20 | 15 4·2 | 70 | 28 0·7 | 530 | 21 | 15 17·7 | 71 | 28 12·4 | 494 | | | |
| Feb. 17 | 26 | 16 37·5 | 76 | 29 33·6 | 522 | 25 | 16 19·7 | 75 | 29 14·5 | 496 | Mean | 524·6 | |
| | 30 | 17 39·6 | 80 | 30 35·7 | 522 | 31 | 17 52·7 | 81 | 30 47·3 | 492 | | | |
| | 36 | 19 12·9 | 86 | 31 8·8 | 518 | 35 | 18 54·8 | 85 | 31 49·3 | 490 | | | |
| | 40 | 20 15·0 | 90 | 33 11·0 | 520 | 41 | 20 27·7 | 91 | 33 22·1 | 488 | | | |
| | 46 | 21 48·1 | 96 | 34 44·0 | 518 | 45 | 21 29·8 | 95 | 34 24·0 | 484 | | | |
| | Mean observed time of one vibration = 15s·5104. Semi-arc of vibration, commencing 10°, ending 4°. Temperature of magnet, 43°·1. | | | | | | | | | | | | |
| | 0 | 4 26 11·4 | 50 | 4 39 9·4 | 15·560 | 1 | 26 24·4 | 51 | 39 20·3 | 15·518 | 4 30 | 521·6 | 44·0 |
| | 6 | 27 44·8 | 56 | 40 42·9 | 562 | 5 | 27 26·7 | 55 | 40 22·3 | 512 | 36 | 519·4 | |
| | 10 | 28 47·0 | 60 | 41 45·2 | 564 | 11 | 28 59·8 | 61 | 41 55·2 | 508 | 40 | 520·2 | |
| | 16 | 30 20·3 | 66 | 43 18·5 | 564 | 15 | 30 1·9 | 65 | 42 57·2 | 506 | 45 | 521·4 | |
| | 20 | 31 22·7 | 70 | 44 20·8 | 562 | 21 | 31 35·0 | 71 | 44 30·1 | 502 | 50 | 521·3 | 44·1 |
| Mar. 23 | 26 | 32 56·0 | 76 | 45 54·2 | 564 | 25 | 32 37·1 | 75 | 45 32·1 | 500 | | | |
| | 30 | 33 58·3 | 80 | 46 56·2 | 558 | 31 | 34 10·2 | 81 | 47 5·0 | 496 | Mean | 520·8 | |
| | 36 | 35 31·7 | 86 | 48 29·8 | 562 | 35 | 35 12·3 | 85 | 48 6·3? | 480 | | | |
| | 40 | 36 33·9 | 90 | 49 32·1 | 564 | 41 | 36 45·3 | 91 | 49 39·5 | 484 | | | |
| | 46 | 38 7·3 | 96 | 51 5·5 | 564 | 45 | 37 47·4 | 95 | 50 41·2 | 476 | | | |
| | Mean observed time of one vibration = 15s·5302. Semi-arc of vibration, commencing 7¼°, ending 2°. Temperature of magnet, 46°·2. | | | | | | | | | | | | |
| | 0 | 9 20 59·2 | 50 | 9 34 1·3 | 15·642 | 1 | 21 14·0 | 51 | 34 15·9 | 15·638 | 9 20 | 535·7 | |
| | 6 | 22 33·3 | 56 | 35 35·2 | 638 | 5 | 22 16·7 | 55 | 35 18·6 | 638 | 25 | 535·3 | |
| | 10 | 23 35·8 | 60 | 36 37·8 | 640 | 11 | 23 50·6 | 61 | 36 52·2 | 632 | 30 | 535·2 | 52·4 |
| | 16 | 25 9·5 | 66 | 38 11·6 | 642 | 15 | 24 53·0 | 65 | 37 54·8 | 636 | 35 | 535·5 | |
| | 20 | 26 12·2 | 70 | 39 14·1 | 638 | 21 | 26 26·8 | 71 | 39 28·7 | 638 | 40 | 537·2 | |
| May 29 | 26 | 27 46·1 | 76 | 40 47·8 | 634 | 25 | 27 29·4 | 75 | 40 31·2 | 636 | 45 | 535·2 | |
| | 30 | 28 48·7 | 80 | 41 50·3 | 632 | 31 | 29 3·2 | 81 | 42 4·9 | 634 | | | |
| | 36 | 30 22·4 | 86 | 43 24·2 | 636 | 35 | 30 5·8 | 85 | 43 7·4 | 632 | Mean | 535·7 | |
| | 40 | 31 25·0 | 90 | 44 26·8 | 636 | 41 | 31 39·7 | 91 | 44 41·3 | 632 | | | |
| | 46 | 32 58·9 | 96 | 46 0·5 | 632 | 45 | 32 42·2 | 95 | 45 43·7 | 630 | | | |
| | Mean observed time of one vibration = 15s·6358. Semi-arc of vibration, commencing 6¾°, ending 5°. Temperature of magnet, 52°·6. | | | | | | | | | | | | |
| | 0 | 6 17 32·2 | 50 | 6 30 33·0 | 15·616 | 1 | 17 45·9 | 51 | 30 45·8 | 15·598 | 6 20 | 541·9 | |
| | 6 | 19 6·2 | 56 | 32 6·7 | 610 | 5 | 18 48·3 | 55 | 31 48·4 | 602 | 25 | 540·5 | |
| | 10 | 20 8·7 | 60 | 33 9·3 | 612 | 11 | 20 22·0 | 61 | 33 21·9 | 598 | 31 | 540·1 | 63·3 |
| | 16 | 21 42·4 | 66 | 34 42·8 | 608 | 15 | 21 24·5 | 65 | 34 24·3 | 596 | 38 | 540·8 | |
| | 20 | 22 44·8 | 70 | 35 45·2 | 608 | 21 | 22 58·0 | 71 | 35 57·8 | 596 | 39 | 540·3 | |
| Aug. 5 | 26 | 24 18·4 | 76 | 37 19·0 | 612 | 25 | 24 0·4 | 75 | 37 0·3 | 598 | | | |
| | 30 | 25 20·9 | 80 | 38 21·4 | 610 | 31 | 25 33·9 | 81 | 38 33·8 | 598 | Mean | 540·7 | |
| | 36 | 26 54·6 | 86 | 39 54·9 | 606 | 35 | 26 36·4 | 85 | 39 36·3 | 598 | | | |
| | 40 | 27 57·0 | 90 | 40 57·4 | 608 | 41 | 28 10·0 | 91 | 41 9·7 | 594 | | | |
| | 46 | 29 30·6 | 96 | 42 31·0 | 608 | 45 | 29 12·4 | 95 | 42 12·2 | 596 | | | |
| | Mean observed time of one vibration = 15s·6036. Semi-arc of vibration, commencing 7¼°, ending 5°. Temperature of magnet, 64°·7. | | | | | | | | | | | | |
| | 0 | 4 23 18·1 | 50 | 4 36 13·3 | 15·504 | 1 | 23 34·6 | 51 | 36 30·8 | 15·524 | 4 25 | 540·0 | 33·05 |
| | 6 | 24 51·1 | 56 | 37 46·3 | 504 | 5 | 24 36·8 | 55 | 37 32·9 | 522 | 30 | 539·8 | |
| | 10 | 25 53·2 | 60 | 38 48·3 | 502 | 11 | 26 9·8 | 61 | 39 6·0 | 524 | 33 | 540·3 | |
| | 16 | 27 26·2 | 66 | 40 21·2 | 500 | 15 | 27 12·0 | 65 | 40 8·2 | 524 | 42 | 539·0 | |
| | 20 | 28 28·3 | 70 | 41 23·1 | 496 | 21 | 28 45·2 | 71 | 41 41·2 | 520 | 45 | 538·3 | |
| Dec. 26 | 26 | 30 1·4 | 76 | 42 56·1 | 494 | 25 | 29 47·2 | 75 | 42 43·3 | 522 | | | |
| | 30 | 31 3·3 | 80 | 43 58·0 | 494 | 31 | 31 20·3 | 81 | 44 16·3 | 522 | Mean | 539·5 | |
| | 36 | 32 36·5 | 86 | 45 30·9 | 488 | 35 | 32 22·5 | 85 | 45 18·3 | 516 | | | |
| | 40 | 33 38·6? | 90 | 46 32·8 | 484 | 41 | 33 55·6 | 91 | 46 51·4 | 516 | | | |
| | 46 | | 96 | | | 45 | 34 58· | 95 | | | | | |
| | Mean observed time of one vibration = 15s·5086. Semi-arc of vibration, commencing 3°·6, ending 1°·1. Temperature of magnet, 33°·8. | | | | | | | | | | | | |

| Date. | N. END OF MAGNET MOVING E. | | | | | N. END OF MAGNET MOVING W. | | | | | BIFILAR. | | |
|---|---|---|---|---|---|---|---|---|---|---|---|---|---|
| | No. of Vib. | Time of Transit. | No. of Vib. | Time of Transit. | Time of one Vib. | No. of Vib. | Time of Transit. | No. of Vib. | Time of Transit. | Time of one Vib. | Time of Obs. | Reading Cor. | Thermometer. |
| | | h. m. s. | | h. m. s. | s. | | m. s. | | m. s. | s. | h. m. | Sc. Div. | ° |
| Dec. 30 | 0 | 2 50 31·2 | 50 | 3 3 27·3 | 15·522 | 1 | 50 47·6 | 51 | 3 44·2 | 15·532 | 2 52 | 531·8 | 36·1 |
| | 6 | 52 4·5 | 56 | 5 0·5 | 520 | 5 | 51 49·7 | 55 | 4 46·1 | 528 | 2 57 | 533·3 | |
| | 10 | 53 6·7 | 60 | 6 2·5 | 516 | 11 | 53 23·0 | 61 | 6 19·2 | 524 | 3 2 | 535·1 | |
| | 16 | 54 39·7 | 66 | 7 35·3 | 512 | 15 | 54 25·0 | 65 | 7 21·2 | 524 | 7 | 539·0 | |
| | 20 | 55 41·9 | 70 | 8 37·4 | 510 | 21 | 55 58·2 | 71 | 8 54·3 | 522 | 12 | 534·8 | |
| | 26 | 57 14·9 | 76 | 10 10·5 | 510 | 25 | 57 0·5 | 75 | 9 56·5 | 520 | 17 | 535·2 | 36·2 |
| | 30 | 58 17·2 | 80 | 11 12·2 | 500 | 31 | 58 33·7 | 81 | 11 29·5 | 516 | | | |
| | 36 | 59 50·2 | 86 | 12 45·3 | 502 | 35 | 59 35·6 | 85 | 12 31·5 | 518 | Mean | 534·9 | |
| | 40 | 3 0 52·2 | 90 | 13 47·3 | 502 | 41 | 1 8·8 | 91 | 14 4·7 | 518 | | | |
| | 46 | 2 25·3 | 96 | 15 20·2 | 498 | 45 | 2 11·0 | 95 | 15 6·8 | 516 | | | |

Mean observed time of one vibration = 15s·5155. Semi-arc of vibration, commencing 3°·6, ending 0°·9. Temperature of magnet 37°·7.

# HOURLY METEOROLOGICAL OBSERVATIONS.

MAKERSTOUN OBSERVATORY,

1844.

| Gott. Mean Time. | Barometer at 32°. | Thermometers. Dry. | Wet. | Diff. | Wind. Maximum force in 1h. | 10m. | From | Clouds, Sc. : C.-s. : Ci., moving from | Sky clouded. | Species of Clouds and Meteorological Remarks. |
|---|---|---|---|---|---|---|---|---|---|---|
| d. h. | in. | ° | ° | ° | lbs. | lbs. | pt. | pt. pt. pt. | 0—10. | |
| 0 13 | ..... | ... | ... | ... | ... | ... | | | ..... | |
| 14 | 29·283 | 32·5 | 31·3 | 1·2 | 0·1 | 0·0 | | — : — : 22 | 9·5 | Sheets of cirri or cirrous-haze; lunar halo. |
| 15 | ..... | ... | ... | ... | ... | ... | | | ..... | |
| 16 | 250 | 30·0 | 29·4 | 0·6 | 0·0 | 0·0 | | — : — : 22 | 1·5 | Cirri in zenith; cirrous-haze to E. |
| 17 | 232 | 28·3 | 27·4 | 0·9 | 0·0 | 0·0 | | | ..... | |
| 18 | 215 | 30·0 | 29·3 | 0·7 | 0·0 | 0·0 | | | 0·7 | Cirro-strati to E. |
| 19 | 189 | 32·1 | 30·9 | 1·2 | 0·0 | 0·0 | | | 5·0 | Snow. |
| 20 | 194 | 30·0 | ... | ... | 0·6 | 0·0 | 20 | 26 : — : — | 1·5 | Scud. |
| 21 | 199 | 30·9 | 29·9 | 1·0 | 0·0 | 0·0 | | | ..... | |
| 22 | 220 | 30·6 | 29·7 | 0·9 | 0·0 | 0·0 | | | 0·2 | Cumulo-strati and cirro-strati on horizon. |
| 23 | 235 | 32·3 | 30·9 | 1·4 | 0·0 | 0·0 | | | ..... | [pat. scud to N. |
| 1 0 | 241 | 32·3 | 30·8 | 1·5 | 0·0 | 0·0 | | 24 : — : — | 0·1 | Pat. wo. cir., cum.-str. cir.-h. E. hor.; sc. on Cheviot, |
| 1 | 234 | 33·3 | 31·2 | 2·1 | 0·0 | 0·0 | | | ..... | [and E. hor. |
| 2 | 229 | 33·6 | 31·4 | 2·2 | 0·1 | 0·0 | | | 0·5 | Wo. cir.; sc. to W.; cum.-str. and cir.-haze on NE. |
| 3 | 221 | 33·9 | 31·8 | 2·1 | 0·3 | 0·0 | 21 | — : — : 25 | 2·0 | Woolly cir.; cum.-str. and cir.-haze on NE. horizon; cir.-str. to W. |
| 4 | 220 | 32·0 | 30·6 | 1·4 | 0·0 | 0·0 | | — : 25 : 21 | 3·0 | Var. kinds of cir.; wo. cir.-cum.; thick dif. cir. to E. |
| 5 | 222 | 32·3 | 31·0 | 1·3 | 0·0 | 0·0 | | 26 : — : — | 9·5 | Thick scud; cirro-strati. |
| 6 | 214 | 31·3 | ... | ... | 0·0 | 0·0 | | | 10·0 | Snowing; Moon's disc obscurely visible. |
| 7 | 211 | 29·0 | 28·6 | 0·4 | 0·0 | 0·0 | | | ..... | |
| 8 | 207 | 28·0 | 27·3 | 0·7 | 0·0 | 0·0 | | | 1·5 | Cirro-strati and cirrous-haze on horizon. |
| 9 | 195 | 28·3 | 27·2 | 1·1 | 0·0 | 0·0 | | | ..... | |
| 10 | 189 | 26·3 | 26·0 | 0·3 | 0·1 | 0·0 | | | 2·0 | Cirri in zenith; lunar halo. |
| 11 | 210 | 25·0 | 24·7 | 0·3 | 0·0 | 0·0 | | | 2·0 | Diffuse cirri and cirrous-haze. |
| 12 | 205 | 28·6 | 27·5 | 1·1 | 0·0 | 0·0 | | | 1·5 | Cirri. |
| 13 | 29·207 | 27·5 | 27·0 | 0·5 | 0·0 | 0·0 | | | 1·0 | Cirro-strati and cirrous-haze to E. |
| 14 | 217 | 26·0 | 25·3 | 0·7 | 0·0 | 0·0 | | | 2·0 | Diffuse cirri and cirrous-haze to NE. |
| 15 | 228 | 27·9 | 27·1 | 0·8 | 0·0 | 0·0 | | | 9·0 | Diffuse cirri. |
| 16 | 244 | 29·7 | 28·7 | 1·0 | 0·1 | 0·2 | | — : — : 24 | 9·0 | Woolly cirri. |
| 17 | 258 | 30·3 | 29·6 | 0·7 | 0·2 | 0·1 | 23 | — : — : 24 | 9·0 | Id. |
| 18 | 279 | 30·0 | 29·4 | 0·6 | 0·1 | 0·2 | 23 | | 3·0 | Cirrous clouds. |
| 19 | 311 | 29·9 | 29·3 | 0·6 | 0·0 | 0·0 | | | 3·0 | Id. |
| 20 | 343 | 29·7 | 29·0 | 0·7 | 0·3 | 0·2 | 28 | | 4·0 | Diffuse cirri. |
| 21 | 326 | 28·2 | 27·5 | 0·7 | 0·3 | 0·2 | | | ..... | |
| 22 | 404 | 28·0 | 27·5 | 0·5 | 0·3 | 0·2 | | 2 : — : — | 5·5 | Scud; cumuli on SE. hor.; cir.-haze on N. horizon. |
| 23 | 431 | 28·9 | 28·5 | 0·4 | 0·3 | 0·2 | | | ..... | |
| 2 0 | 451 | 29·3 | 29·1 | 0·2 | 0·5 | 0·1 | | | 1·5 | Scud; woolly cirri. |
| 1 | 470 | 31·9 | 31·5 | 0·4 | ... | ... | | | 8·0 | |
| 2 | 495 | 30·4 | 30·3 | 0·1 | 0·5 | 0·1 | | | 2·0 | Loose cumuli to E. |
| 3 | 535 | 29·3 | 26·7 | 2·6 | 0·1 | 0·1 | | | 0·7 | |
| 4 | 559 | 27·8 | 25·3 | 2·5 | 0·0 | 0·0 | | | 0·2 | Cumuli to E. |
| 5 | 561 | 24·5 | 23·0 | 1·5 | 0·0 | 0·0 | | | ..... | |
| 6 | 569 | 22·8 | 21·9 | 0·9 | 0·0 | 0·0 | | | 0·1 | A streak of cirro-stratus to E. |
| 7 | 584 | 20·6 | 20·0 | 0·6 | 0·0 | 0·0 | | | 0·1 | Cirro-stratus to W. |
| 8 | 591 | 20·0 | 18·6 | 1·4 | 0·0 | 0·0 | | | 0·5 | Linear cirri lying from N by E. to S by W. |
| 9 | 597 | 15·4 | 14·8 | 0·6 | 0·0 | 0·0 | | | ..... | |
| 10 | 599 | 22·6 | 20·8 | 1·6 | 0·0 | 0·0 | | — : — : 28 | 3·0 | Diffuse cirri. |
| 11 | 584 | 23·3 | 22·0 | 1·3 | 0·4 | 0·0 | | | 6·0 | Mottled and linear cirri lying from SE to SW. |
| 12 | 552 | 24·4 | 23·2 | 1·4 | 0·0 | 0·0 | | 4 : — : — | 8·0 | Scud; cirri to SW.; Moon nearly obscured. |
| 13 | 29·537 | 28·2 | 26·3 | 1·9 | 0·2 | 0·3 | 22 | | 10·0 | Scud. |
| 14 | 530 | 27·8 | 26·0 | 1·8 | 0·4 | 0·0 | | — : — : 28 | 7·0 | Linear and woolly cirri; scud and cumuli to E. |
| 15 | 530 | 27·7 | 26·3 | 1·4 | 0·0 | 0·0 | | | 8·0 | Scud. |
| 16 | 495 | 30·5 | 28·3 | 2·2 | 1·9 | 1·7 | 20 | | 9·0 | Id. |
| 17 | 485 | 32·2 | 30·0 | 2·2 | 1·8 | 1·3 | 19 | | 9·0 | Id. |
| 18 | 448 | 32·7 | 30·9 | 1·8 | 1·3 | 1·0 | 18 | | 10·0 | Id. |
| 19 | 443 | 35·3 | 32·3 | 3·0 | 1·0 | 0·9 | | | 10·0 | Id. |
| 20 | 436 | 35·9 | 33·3 | 2·6 | 1·4 | 1·6 | 19 | | 9·5 | Id. |

The direction of the wind is indicated by the number of the point of the compass, reckoning N. = 0, E. = 8, S. = 16, W. = 24. The motions of the three strata of clouds, Sc. (scud), C.-s. (cirro-stratus), and Cir. (cirrus), are indicated in a similar manner.

Jan. 1d 20h. The wind has been blowing about 0·2 or 0·3 lb. for some time, but no pressure has been indicated by the anemometer, probably from the vane being frozen up.

| Gött. Mean Time. | Barometer at 32°. | Thermometers. Dry. | Wet. | Diff. | Wind. Maximum force in 1h. | 10m. | From | Clouds, Sc. : C.-s. : Ci., moving from | Sky clouded. | Species of Clouds and Meteorological Remarks. |
|---|---|---|---|---|---|---|---|---|---|---|
| d. h. | in. | ° | ° | ° | lbs. | lbs. | pt. | pt. pt. pt. | 0—10. | |
| 2 21 | 29·448 | 35·4 | 33·7 | 1·7 | 0·7 | 0·3 | 19 | 24 : — : — | 10·0 | Scud; mottled cirri and cirro-strati. |
| 22 | 440 | 35·3 | 33·5 | 1·8 | 2·7 | 1·5 | 19 | 22 : 24 : — | 8·5 | Two currents of scud; cirro-strati and cirri to E. |
| 23 | 418 | 38·0 | 35·2 | 2·8 | 2·2 | 1·7 | 20 | 23 : — : — | 8·5 | Scud; cirro-cumuli. |
| 3 0 | 425 | 38·5 | 35·9 | 2·6 | 3·0 | 1·4 | | 23 : 28 : — | 8·0 | Id.; id. |
| 1 | 430 | 39·7 | 37·3 | 2·4 | 1·5 | 0·6 | 20 | 23 : — : — | 8·5 | Id.; masses of mottled cirri. |
| 2 | 427 | 39·1 | 36·8 | 2·3 | 0·8 | 0·3 | 20 | 23 : — : — | 9·0 | Id.; mottled and linear cirri; slight shower. |
| 3 | 427 | 37·4 | 36·0 | 1·4 | 0·6 | 0·5 | 20 | 24 : — : — | 10·0 | Id.; cirro-strati to NE. |
| 4 | 424 | 37·0 | 35·9 | 1·1 | 1·2 | 0·0 | | 24 : — : — | 10·0 | Thick scud; cirrous-clouds; light rain occasionally. |
| 5 | 430 | 36·1 | 35·1 | 1·0 | 0·0 | 0·0 | | 24 : — : — | 10·0 | Id.; id. |
| 6 | 411 | 37·4 | 35·9 | 1·5 | 0·0 | 0·0 | | | 10·0 | Id. |
| 7 | 405 | 35·2 | 34·2 | 1·0 | 0·0 | 0·0 | | | 10·0 | Id. |
| 8 | 396 | 35·0 | 34·1 | 0·9 | 0·0 | 0·0 | | | 10·0 | Id. |
| 9 | 377 | 35·0 | 34·2 | 0·8 | 0·0 | 0·0 | | | 10·0 | Id. |
| 10 | 362 | 34·5 | 34·0 | 0·5 | 0·0 | 0·0 | | | 10·0 | Id.; rain. |
| 11 | 341 | 33·2 | 33·1 | 0·1 | 0·0 | 0·0 | | | 10·0 | A slight fall of snow. |
| 12 | 311 | 32·9 | 32·8 | 0·1 | 0·0 | 0·0 | | | 10·0 | Id.; Moon barely visible. |
| 13 | 29·302 | 32·8 | 32·8 | ... | 0·0 | 0·0 | | | 10·0 | A slight fall of snow. |
| 14 | 282 | 32·9 | 32·9 | ... | 0·0 | 0·0 | | | 10·0 | Id. |
| 15 | 275 | 33·1 | 33·0 | 0·1 | 0·0 | 0·0 | | 6 : — : — | 10·0 | Id. |
| 16 | 276 | 33·1 | 33·0 | 0·1 | 0·0 | 0·0 | | | 10·0 | Id. |
| 17 | 274 | 33·7 | 33·5 | 0·2 | 0·0 | 0·0 | | | 10·0 | Id. |
| 18 | 282 | 34·0 | 33·9 | 0·1 | 0·0 | 0·0 | | | 10·0 | Slight drizzle. |
| 19 | 305 | 34·7 | 34·5 | 0·2 | 0·0 | 0·0 | | | 10·0 | Id. |
| 20 | 339 | 35·1 | 34·9 | 0·2 | 0·0 | 0·0 | | | 10·0 | Id. |
| 21 | 359 | 35·2 | 35·0 | 0·2 | 0·0 | 0·0 | | 4 : — : — | 10·0 | Thick homogeneous scud; drops of rain. |
| 22 | 398 | 35·0 | 34·9 | 0·1 | 0·0 | 0·0 | | | 10·0 | Thick mass of cirrous clouds. |
| 23 | 421 | 35·3 | 35·0 | 0·3 | 0·0 | 0·0 | | | 10·0 | The same, a few drops of rain. |
| 4 0 | 430 | 36·4 | 36·0 | 0·4 | 0·0 | 0·0 | | | 10·0 | Scud and cirrous clouds; homogeneous. |
| 1 | 441 | 36·8 | 36·2 | 0·6 | 0·0 | 0·0 | | | 10·0 | Id.; id. |
| 2 | 454 | 36·9 | 36·6 | 0·3 | 0·0 | 0·0 | | — : — : 18 | 9·7 | Watery-looking woolly cirri in zen.; thick on hor. * |
| 3 | 482 | 36·6 | 36·3 | 0·3 | 0·0 | 0·0 | | | 10·0 | Loose scud to SE.; thick cirrous mass. |
| 4 | 481 | 36·0 | 35·9 | 0·1 | 0·0 | 0·0 | | 20 : — : — | 10·0 | Scud; thick cirro-stratus. |
| 5 | 485 | 35·0 | 34·8 | 0·2 | 0·0 | 0·0 | | | 10·0 | Thick mass of clouds; nearly homogeneous. |
| 6 | 484 | 34·8 | 34·7 | 0·1 | 0·0 | 0·0 | | | 10·0 | Id.; id. |
| 7 | 477 | 34·6 | 34·4 | 0·2 | 0·0 | 0·0 | | | 10·0 | Id.; id. |
| 8 | 462 | 35·1 | 34·8 | 0·3 | 0·0 | 0·0 | | 14 : — : — | 10·0 | Scud; dense clouds above. |
| 9 | 450 | 36·9 | 36·3 | 0·6 | 0·0 | 0·0 | | 14 : — : — | 10·0 | Id.; id. |
| 10 | 424 | 37·8 | 37·3 | 0·5 | 0·0 | 0·0 | 15 | 14 : — : — | 10·0 | Id.; id. |
| 11 | 397 | 38·3 | 37·6 | 0·7 | 0·2 | 0·0 | 19 | | 10·0 | A few drops of rain. |
| 12 | 363 | 39·0 | 38·7 | 0·3 | 0·2 | 0·1 | 14 | | 10·0 | Light rain. |
| 13 | 29·326 | 39·0 | 38·7 | 0·3 | 0·1 | 0·0 | | | 10·0 | Rain. |
| 14 | 296 | 39·8 | 39·6 | 0·2 | 0·0 | 0·0 | | | 10·0 | Id. |
| 15 | 242 | 40·4 | 40·0 | 0·4 | 0·0 | 0·0 | | 16 : — : — | 10·0 | Scud. |
| 16 | 201 | 41·1 | 40·8 | 0·3 | 0·1 | 0·1 | 19 | | 10·0 | Light drizzle. |
| 17 | 159 | 41·3 | 41·1 | 0·2 | 0·2 | 0·0 | 18 | | 10·0 | Scud. |
| 18 | 125 | 41·7 | 41·6 | 0·1 | 0·0 | 0·0 | | | 10·0 | Id. |
| 19 | 108 | 41·7 | 41·6 | 0·1 | 0·0 | 0·0 | | | 10·0 | Id. |
| 20 | 092 | 43·3 | 43·0 | 0·3 | 0·0 | 0·0 | | | 10·0 | Id. |
| 21 | 089 | 48·0 | 47·9 | 0·1 | 0·0 | 0·0 | | | 10·0 | Light drizzle. |
| 22 | 088 | 48·5 | 48·2 | 0·3 | 0·1 | 0·1 | | | 10·0 | Fog in the valleys. |
| 23 | 066 | 48·3 | 48·2 | 0·1 | 0·0 | 0·0 | | | 10·0 | Scud. |
| 5 0 | 29·004 | 49·3 | 49·0 | 0·3 | 0·7 | 0·1 | 18 | | 10·0 | Heavy rain. |
| 1 | 28·983 | 49·3 | 49·0 | 0·3 | 0·1 | 0·1 | 18 | 20 : — : — | 10·0 | Scud; cirrous-clouds; sky seen occasionally. |
| 2 | 960 | 50·0 | 49·9 | 0·1 | 1·5 | 0·6 | 19 | 20 : — : — | 10·0 | Id. |
| 3 | 996 | 50·7 | 49·9 | 0·8 | 0·8 | 1·8 | 20 | 20 : — : — | 10·0 | Id. |
| 4 | 979 | 49·6 | 49·0 | 0·6 | 1·8 | 0·2 | 19 | 20 : — : — | 10·0 | Id. |

The direction of the wind is indicated by the number of the point of the compass, reckoning N. = 0, E. = 8, S. = 16, W. = 24. The motions of the three strata of clouds, Sc. (scud), C.-s. (cirro-stratus), and Cir. (cirrus), are indicated in a similar manner.

Jan. 4d 3h. Observation made at 3h 15m.

Jan. 5d 0h. Observation made at 0h 7m.

* See additional meteorological notes after the *Hourly Meteorological Observations*.

| Gött. Mean Time. | Barometer at 32°. | Thermometers. Dry. | Wet. | Diff. | Wind. Maximum force in 1h. | 10m. | From | Clouds, Sc. : C.-s. : Ci., moving from | Sky clouded. | Species of Clouds and Meteorological Remarks. |
|---|---|---|---|---|---|---|---|---|---|---|
| d. h. | in. | ° | ° | ° | lbs. | lbs. | pt. | pt. pt. pt. | 0—10. | |
| 5 5 | 28·957 | 49·5 | 48·4 | 1·1 | 0·5 | 0·2 | | 20 : — : — | 9·0 | Scud. |
| 6 | 931 | 50·0 | 48·7 | 1·3 | 0·7 | 0·5 | | 20 : — : — | 10·0 | Id. |
| 7 | 915 | 49·6 | 48·1 | 1·5 | 0·4 | 0·2 | 18 | 20 : — : — | 10·0 | Id. |
| 8 | 892 | 48·5 | 47·9 | 0·6 | 0·2 | 0·1 | 18 | 20 : — : — | 9·5 | Id.; cirri and haze; broad lunar corona. |
| 9 | 885 | 47·8 | 46·8 | 1·0 | 0·9 | 0·9 | 18 | | 10·0 | Heavy shower. |
| 10 | 877 | 46·7 | 45·9 | 0·8 | 0·3 | 0·1 | 18 | 20 : — : — | 9·0 | Scud; faint traces of aurora to NNW. |
| 11 | 876 | 45·4 | 44·9 | 0·5 | 0·0 | 0·0 | | | 6·0 | Loose scud. |
| 12 | 865 | 43·6 | 43·1 | 0·5 | 0·0 | 0·0 | | 21 : — : — | 7·5 | Id. |
| 13 | 28·846 | 45·0 | 44·3 | 0·7 | 0·0 | 0·0 | | 21 : — : — | 7·0 | Loose scud. |
| 14 | 820 | 46·2 | 45·7 | 0·5 | 0·0 | 0·0 | | | 10·0 | Rain. |
| 15 | 803 | 44·9 | 44·1 | 0·8 | 0·0 | 0·0 | | | 10·0 | Id. |
| 16 | 803 | 44·0 | 43·9 | 0·1 | 0·0 | 0·0 | | | 10·0 | Id. |
| 17 | 782 | 44·2 | 43·8 | 0·4 | 0·0 | 0·0 | | | 10·0 | Scud. |
| 18 | 772 | 43·9 | 43·6 | 0·3 | 0·0 | 0·0 | | | 10·0 | Heavy rain. |
| 19 | 754 | 43·6 | 43·0 | 0·6 | 0·0 | 0·0 | | | 10·0 | |
| 20 | 754 | 42·7 | 42·3 | 0·4 | 0·0 | 0·0 | | | 9·5 | Scud; heavy clouds to W. |
| 21 | 768 | 42·0 | 41·7 | 0·3 | 0·0 | 0·0 | | 23 : 22 : 16 | 8·5 | Id.; woolly cirro-cumuli, slowly; woolly cirri, slowly. |
| 22 | 783 | 42·0 | 41·5 | 0·5 | 0·0 | 0·0 | | 23 : 22 : 17 | 5·5 | Id.; id.; id. |
| 23 | 804 | 40·9 | 40·8 | 0·1 | 0·1 | 0·0 | | 24 : — : — | 9·5 | Id.; cirro-cumuli, cirro-strati, woolly cirri. |
| 6 0 | 807 | 44·0 | 43·4 | 0·6 | 0·0 | 0·0 | | 24 : — : — | 9·5 | Cirro-cumulous-scud; cirri and cirrous-haze to E. |
| 1 | 806 | 45·0 | 44·1 | 0·9 | 0·0 | 0·0 | | 23 : — : — | 7·0 | Id.; id. |
| 2 | 815 | 45·5 | 44·7 | 0·8 | 0·0 | 0·0 | | 21 : 24 : — | 3·0 | Loose scud; cirro-cumulous-scud; cirro-strati to E. |
| 3 | 839 | 46·8 | 45·3 | 1·5 | 0·0 | 0·0 | | — : 24 : — | 8·0 | Cirro-cumulous-scud moving slowly. |
| 4 | 857 | 44·9 | 43·6 | 1·3 | 0·0 | 0·0 | | 24 : — : — | 9·8 | Scud. |
| 5 | 873 | 43·7 | 42·8 | 0·9 | 0·0 | 0·0 | | 26 : 24 : — | 10·0 | Two currents of scud. |
| 6 | 895 | 43·5 | 43·2 | 0·3 | 0·0 | 0·0 | | | 4·0 | Cirro-cumuli to SW. |
| 7 | 918 | 40·3 | 39·9 | 0·4 | 0·0 | 0·0 | | | 3·0 | Id. |
| 8 | 943 | 40·7 | 40·2 | 0·5 | 0·0 | 0·0 | | 26 : — : — | 10·0 | Loose scud; cirro-cumuli on E. horizon. |
| 9 | 961 | 40·0 | 39·5 | 0·5 | 0·0 | 0·0 | | 26 : — : — | 9·5 | Id. |
| 10 | 28·987 | 41·2 | 40·5 | 0·7 | 0·0 | 0·0 | | 26 : — : — | 9·0 | Id. |
| 11 | 29·003 | 40·0 | 39·6 | 0·4 | 0·0 | 0·0 | | — : — : 26 | 7·0 | Woolly cirri; lunar corona. |
| 12 | 29·022 | 41·9 | 40·9 | 1·0 | 0·0 | 0·0 | | | 10·0 | Thick woolly cirri. |
| 7 0 | | | | | 0·0 | 0·0 | | | | |
| 13 | 29·491 | 34·6 | 33·6 | 1·0 | 0·0 | 0·0 | | 28 : 6 : 6 | 8·0 | Pat. loose scud; thick cir.-cum., cirri; col. lun. corona. |
| 14 | 522 | 35·6 | 34·7 | 0·9 | 0·0 | 0·0 | | | 10·0 | Thick cirrous mass. |
| 15 | 544 | 36·2 | 35·3 | 0·9 | 0·0 | 0·0 | | | 10·0 | Id. |
| 16 | 561 | 36·6 | 35·7 | 0·9 | 0·0 | 0·0 | | 0 : — : — | 10·0 | Loose scud, the Moon's disc visible through it. |
| 17 | 578 | 36·1 | 35·7 | 0·4 | 0·0 | 0·0 | | | 10·0 | Drops of rain. |
| 18 | 598 | 33·2 | 33·0 | 0·2 | 0·0 | 0·0 | | — : — : 2 | 8·0 | Varieties of cirri; coloured lunar corona 4° radius. |
| 19 | 627 | 34·8 | 34·7 | 0·1 | 0·0 | 0·0 | | 2 : — : — | 9·9 | Thick cirro-stratous-scud; lunar corona. |
| 20 | 662 | 36·0 | 35·7 | 0·3 | 0·0 | 0·0 | | | 9·8 | Loose scud; cirrous clouds. |
| 21 | 702 | 36·4 | 36·1 | 0·3 | 0·0 | 0·0 | | | 10·0 | Scud. |
| 22 | 736 | 36·7 | 36·3 | 0·4 | 0·0 | 0·0 | | — : — : 7 | 7·0 | Id.; cirri. |
| 23 | 758 | 38·0 | 37·7 | 0·3 | 0·0 | 0·0 | | 8 : — : — | 9·0 | Thin scud; strati to E. |
| 8 0 | 773 | 38·9 | 38·3 | 0·6 | 0·0 | 0·0 | | | 10·0 | Scud. |
| 1 | 798 | 39·5 | 38·5 | 1·0 | 0·0 | 0·0 | | 11 : — : — | 10·0 | Id. |
| 2 | 812 | 40·0 | 39·4 | 0·6 | 0·0 | 0·0 | | 9 : — : — | 10·0 | Thin scud; stratus; light rain. |
| 3 | 806 | 40·6 | 39·9 | 0·7 | 0·0 | 0·0 | | 9 : — : — | 9·8 | Id. |
| 4 | 880 | 39·9 | 39·3 | 0·6 | 0·0 | 0·0 | | 11 : — : — | 9·7 | Scud; cirrous-scud. |
| 5 | 901 | 38·7 | 38·1 | 0·6 | 0·0 | 0·0 | | | 10·0 | Scud in strange conglomerations; cirri. |
| 6 | 917 | 39·0 | 38·0 | 1·0 | 0·0 | 0·0 | | | 9·8 | Id.; id. |
| 7 | 937 | 38·2 | 37·4 | 0·8 | 0·0 | 0·0 | | | 10·0 | Dark. |
| 8 | 955 | 38·6 | 37·6 | 1·0 | 0·0 | 0·0 | | | 10·0 | Id. |
| 9 | 29·975 | 38·8 | 37·8 | 1·0 | 0·0 | 0·0 | | | 10·0 | Id. |
| 10 | 30·006 | 38·7 | 37·4 | 1·3 | 0·0 | 0·0 | | | 10·0 | Id. |

The direction of the wind is indicated by the number of the point of the compass, reckoning N. = 0, E. = 8, S. = 16, W. = 24. The motions of the three strata of clouds, Sc. (scud), C.-s. (cirro-stratus), and Cir. (cirrus), are indicated in a similar manner.

| Gött. Mean Time. | Barometer at 32°. | Thermometers. Dry. | Wet. | Diff. | Wind. Maximum force in 1h. | 10m. | From | Clouds, Sc. : C.-s. : Ci., moving from | Sky clouded. | Species of Clouds and Meteorological Remarks. |
|---|---|---|---|---|---|---|---|---|---|---|
| d. h. | in. | ° | ° | ° | lbs. | lbs. | pt. | pt. pt. pt. | 0—10. | |
| 8 11 | 30·016 | 38·2 | 37·8 | 0·4 | 0·0 | 0·0 | | | 10·0 | Dark. |
| 12 | 026 | 37·9 | 36·5 | 1·4 | 0·0 | 0·0 | | | 10·0 | Id. |
| 13 | 30·043 | 37·3 | 36·0 | 1·3 | 0·1 | 0·0 | | 13 : — : — | 9·9 | Scud; sky to SE. |
| 14 | 057 | 37·0 | 36·7 | 0·3 | 0·9 | 0·1 | 14 | 16 : — : — | 10·0 | Id. |
| 15 | 059 | 36·4 | 35·2 | 1·2 | 0·3 | 0·2 | | 16 : — : — | 8·0 | Id.; woolly clouds above. |
| 16 | 064 | 35·8 | 34·8 | 1·0 | 1·1 | 0·2 | 16 | 16 : — : — | 6·0 | Loose scud; lunar halo, radius 23°, breadth 1½°. |
| 17 | 055 | 35·7 | 35·3 | 0·4 | 1·5 | 0·9 | 14 | 16 : — : — | 6·0 | Id.; id. |
| 18 | 062 | 35·0 | 33·5 | 1·5 | 1·6 | 0·1 | 16 | | 10·0 | More clouds, halo still visible. |
| 19 | 066 | 34·9 | 33·4 | 1·5 | 0·1 | 0·1 | 16 | | 10·0 | Upper portion of halo visible, Moon seen faintly. |
| 20 | 071 | 35·4 | 34·0 | 1·4 | 1·2 | 0·9 | 16 | | 10·0 | Scud and cirrous-haze. |
| 21 | 063 | 35·0 | 33·0 | 2·0 | 1·7 | 1·7 | 15 | 15 : — : — | 7·0 | Scud; cross-linked woolly cirri, the links lying E. and [W. |
| 22 | 064 | 34·4 | 32·4 | 2·0 | 1·1 | 0·1 | 15 | 15 : — : — | 10·0 | Id.; homogeneous sheet of cirri. |
| 23 | 052 | 34·2 | 32·2 | 2·0 | 1·2 | 1·1 | 15 | 15 : — : — | 10·0 | Id. |
| 9 0 | 026 | 34·7 | 32·4 | 2·3 | 2·0 | 1·0 | 18 | 16 : — : — | 10·0 | Id.; cirri; cirro-strati; wind in gusts. |
| 1 | 30·009 | 35·2 | 33·0 | 2·2 | 1·5 | 0·7 | 17 | | 10·0 | As before; beginning to snow. |
| 2 | 29·996 | 33·0 | 32·8 | 0·2 | 0·9 | 0·3 | 17 | | 10·0 | Moderate snow shower. |
| 3 | 968 | 33·0 | 32·8 | 0·2 | 1·5 | 1·1 | 16 | | 10·0 | Snowing. |
| 4 | 958 | 32·9 | 32·7 | 0·2 | 1·6 | 1·1 | 16 | | 10·0 | Id. |
| 5 | 937 | 32·8 | 32·6 | 0·2 | 1·8 | 2·3 | 16 | | 10·0 | Id. |
| 6 | 917 | 32·8 | 32·4 | 0·4 | 2·0 | 0·9 | 14 | | 10·0 | Id. |
| 7 | 900 | 32·4 | 32·4 | ... | 1·5 | 1·1 | 16 | | 10·0 | Id. |
| 8 | 881 | 32·7 | 32·6 | 0·1 | 0·6 | 0·0 | 17 | | 10·0 | Id. |
| 9 | 856 | 32·9 | 32·5 | 0·4 | 0·6 | 0·1 | 15 | | 10·0 | Id. |
| 10 | 844 | 33·3 | 32·5 | 0·8 | 0·1 | 0·1 | 16 | | 10·0 | Id. |
| 11 | 818 | 33·2 | 32·7 | 0·5 | 0·1 | 0·0 | 16 | | 10·0 | Sleet and small hail. |
| 12 | 812 | 33·0 | 32·7 | 0·3 | 0·0 | 0·0 | | | 10·0 | Light snow. |
| 13 | 29·814 | 33·0 | 32·7 | 0·3 | 0·0 | 0·0 | | | 10·0 | Light snow. |
| 14 | 795 | 34·1 | 33·8 | 0·3 | 0·0 | 0·0 | | | 10·0 | Snow nearly ceased; clouds breaking. |
| 15 | 816 | 35·1 | 35·0 | 0·1 | 0·0 | 0·0 | | 29 : — : — | 9·7 | Scud; sky in zenith. |
| 16 | 828 | 36·1 | 35·8 | 0·3 | 0·0 | 0·0 | | | 0·5 | Cirro-strati to E.; scud to W. and S. |
| 17 | 846 | 36·0 | 35·9 | 0·1 | 0·0 | 0·0 | | 24 : — : — | 2·5 | Scud moving quickly. |
| 18 | 854 | 38·3 | 38·2 | 0·1 | 0·0 | 0·0 | | 25 : — : — | 8·5 | Id. |
| 19 | 866 | 37·3 | 37·1 | 0·2 | 0·0 | 0·0 | | | 0·2 | Scud to SW. |
| 20 | 872 | 36·9 | 36·4 | 0·5 | 0·0 | 0·0 | | | 1·2 | Id. to SE. |
| 21 | 880 | 36·6 | 36·4 | 0·2 | 0·0 | 0·0 | | 24 : — : 28 | 2·0 | Id. to E.; woolly and linear cirri. |
| 22 | 898 | 37·7 | 37·3 | 0·4 | 0·0 | 0·0 | | 24 : 28 : 28 | 2·0 | Id.; varieties of cirri, cirro-cumuli. |
| 23 | 901 | 39·1 | 38·1 | 1·0 | 0·0 | 0·0 | | 26 : — : — | 9·0 | Id.; cirrous clouds. |
| 10 0 | 905 | 39·7 | 39·5 | 0·2 | 0·0 | 0·0 | | | 9·8 | Id.; slight shower lately. |
| 1 | 903 | 39·0 | 38·6 | 0·4 | 0·0 | 0·0 | | 26 : — : — | 2·0 | Id.; mottled and linear cirri. |
| 2 | 927 | 40·4 | 39·9 | 0·5 | 0·0 | 0·0 | | — : 28 : 28 | 1·5 | Mot. cir., small cir.-cum. rad. from NW by N.; scud. |
| 3 | 947 | 41·6 | 40·1 | 1·5 | 0·0 | 0·0 | | — : 29 : 29 | 4·0 | Wo. and lin. cir., cir.-cum.; scud on Cheviot; cir.-str. |
| 4 | 961 | 41·3 | 40·0 | 1·3 | 0·0 | 0·0 | | — : 28 : 28 | 8·0 | Woolly and crossed cir., cir.-cum. lying NNW. to SSE. |
| 5 | 971 | 41·3 | 39·7 | 1·6 | 0·0 | 0·0 | | — : 28 : — | 8·0 | Woolly cir. and cir.-cum. lying NNW. to SSE.; cir.-str. |
| 6 | 980 | 41·0 | 39·3 | 1·7 | 0·0 | 0·0 | | | 9·7 | Id. |
| 7 | 29·999 | 43·6 | 40·4 | 3·2 | 0·0 | 0·0 | | | 10·0 | Id. |
| 8 | 30·007 | 41·1 | 39·7 | 1·4 | 0·0 | 0·0 | | | 10·0 | Id. |
| 9 | 022 | 42·1 | 40·4 | 1·7 | 0·0 | 0·0 | | | 8·0 | Bands of cirri lying NNW. to SSE. |
| 10 | 036 | 42·5 | 40·7 | 1·8 | 0·0 | 0·0 | | | 2·5 | Cirri radiating from SSE.; auroral light? |
| 11 | 035 | 42·0 | 40·6 | 1·4 | 0·0 | 0·0 | | | 1·0 | Id.; id. |
| 12 | 041 | 38·6 | 38·3 | 0·3 | 0·0 | 0·0 | | | 1·0 | Id.; lunar corona. |
| 13 | 30·042 | 39·6 | 39·5 | 0·1 | 0·0 | 0·0 | | | 1·0 | Cirri radiating from SSE. |
| 14 | 057 | 40·9 | 40·0 | 0·9 | 0·0 | 0·0 | | | 4·0 | Woolly cirri and cirro-cumuli as before; lunar corona. |
| 15 | 066 | 42·2 | 40·9 | 1·3 | 0·0 | 0·0 | | | 3·0 | Cirro-cumuli. |
| 16 | 074 | 41·0 | 40·2 | 0·8 | 0·0 | 0·0 | | | 1·0 | Id. |
| 17 | 070 | 40·8 | 40·3 | 0·5 | 0·0 | 0·0 | | | 1·0 | Cirrous clouds to E.; cirro-strati to S. |

The direction of the wind is indicated by the number of the point of the compass, reckoning N. = 0, E. = 8, S. = 16, W. = 24. The motions of the three strata of clouds, Sc. (scud), C.-s. (cirro-stratus), and Cir. (cirrus), are indicated in a similar manner.

Jan. 8d 18h. Observation made at 18h 25m.

| Gött. Mean Time. | | Barometer at 32°. | Thermometers. Dry. | Wet. | Diff. | Wind. Maximum force in 1h. | 10m. | From | Clouds, Sc. : C.-s. : Ci., moving from | Sky clouded. | Species of Clouds and Meteorological Remarks. |
|---|---|---|---|---|---|---|---|---|---|---|---|
| d. | h. | in. | ° | ° | ° | lbs. | lbs. | pt. | pt. pt. pt. | 0—10. | |
| 10 | 18 | 30·088 | 38·1 | 38·0 | 0·1 | 0·0 | 0·0 | | 26 : — : — | 3·5 | Scud, producing a coloured lunar corona ; cirri. |
| | 19 | 094 | 38·1 | 37·9 | 0·2 | 0·0 | 0·0 | | 27 : — : — | 1·0 | Loose scud. |
| | 20 | 100 | 40·0 | 39·8 | 0·2 | 0·0 | 0·0 | | | 0·2 | Cirro-strati to E. |
| | 21 | 118 | 40·2 | 39·9 | 0·3 | 0·0 | 0·0 | | | 0·5 | Id. ; patches of scud. |
| | 22 | 123 | 40·1 | 39·5 | 0·6 | 0·0 | 0·0 | | | 0·5 | Id. ; scud on Cheviot. |
| | 23 | 127 | 39·6 | 39·3 | 0·3 | 0·0 | 0·0 | | | 0·2 | Id. |
| 11 | 0 | 120 | 40·8 | 40·3 | 0·5 | 0·0 | 0·0 | | | 0·2 | Id. |
| | 1 | 114 | 44·3 | 42·4 | 1·9 | 0·0 | 0·0 | | | 3·0 | Cirro-strati to E. ; mottled and linear cirri to W. |
| | 2 | 108 | 45·4 | 43·3 | 2·1 | 0·0 | 0·0 | | — : — : 28 | 6·0 | Scud ; cirri and cirro-cumuli. |
| | 3 | 102 | 43·7 | 42·2 | 1·5 | 0·0 | 0·0 | | — : — : 4 | 6·0 | Patches of scud ; cirri, cirro-cumuli, cirro-strati. |
| | 4 | 102 | 43·5 | 41·9 | 1·6 | 0·0 | 0·0 | | | 6·0 | Id. ; id., id. |
| | 5 | 096 | 39·9 | 39·1 | 0·8 | 0·0 | 0·0 | 18 | — : 28 : — | 4·0 | Cir.-cum.-str.; cir. to NW., cir.-h. to E.; sc. on Cheviot. |
| | 6 | 093 | 38·6 | 38·2 | 0·4 | 0·0 | 0·0 | | 20 : — : 26 | 8·0 | Loose scud moving quickly ; cirrous clouds. |
| | 7 | 088 | 37·5 | 37·1 | 0·4 | 0·0 | 0·0 | | | 8·5 | Cirro-stratus. |
| | 8 | 078 | 39·7 | 39·3 | 0·4 | 0·0 | 0·0 | | | 10·0 | Id. |
| | 9 | 060 | 42·1 | 41·4 | 0·7 | 0·0 | 0·0 | | | 10·0 | A few drops of rain. |
| | 10 | 047 | 42·9 | 41·9 | 1·0 | 0·1 | 0·0 | 21 | | 10·0 | |
| | 11 | 032 | 42·3 | 41·4 | 0·9 | 0·0 | 0·0 | | | 10·0 | |
| | 12 | 014 | 42·3 | 41·2 | 1·1 | 0·0 | 0·0 | | | 10·0 | Very dark. |
| | 13 | 29·998 | 41·9 | 40·6 | 1·3 | 0·0 | 0·0 | | | 10·0 | |
| | 14 | 974 | 43·6 | 42·3 | 1·3 | 0·0 | 0·0 | | | 10·0 | |
| | 15 | 958 | 43·3 | 42·2 | 1·1 | 0·0 | 0·0 | | | 10·0 | Streaks of light to N. and E. |
| | 16 | 946 | 43·7 | 42·7 | 1·0 | 0·0 | 0·0 | | | 10·0 | |
| | 17 | 915 | 44·0 | 43·0 | 1·0 | 0·1 | 0·0 | 18 | | 10·0 | Light rain. |
| | 18 | 893 | 43·4 | 42·4 | 1·0 | 0·1 | 0·0 | 19 | | 10·0 | Rain. |
| | 19 | 877 | 43·2 | 42·3 | 0·9 | 0·0 | 0·0 | | | 10·0 | |
| | 20 | 851 | 43·2 | 42·2 | 1·0 | 0·0 | 0·0 | | | 10·0 | Light Rain. |
| | 21 | 836 | 43·9 | 43·0 | 0·9 | 0·0 | 0·0 | | 19 : — : — | 10·0 | Nearly homogeneous scud. |
| | 22 | 826 | 44·1 | 43·0 | 1·1 | 1·0 | 0·1 | 18 | | 10·0 | Id. |
| | 23 | 816 | 44·1 | 43·2 | 0·9 | 0·2 | 0·1 | 15 | 19 : — : — | 10·0 | Scud. |
| 12 | 0 | 813 | 45·0 | 44·0 | 1·0 | 0·1 | 0·0 | 20 | | 10·0 | Id., slight drizzle commencing. |
| | 1 | 788 | 46·0 | 44·5 | 1·5 | 0·1 | 0·0 | 20 | 20 : 28 : — | 10·0 | Id. to SE. ; dense cirro-stratus. |
| | 2 | 792 | 44·9 | 44·2 | 0·7 | 0·0 | 0·0 | | 24 : — : — | 10·0 | Thin scud ; thick cirro-stratus ; light rain. |
| | 3 | 792 | 44·4 | 44·0 | 0·4 | 0·0 | 0·0 | | 26 : — : — | 10·0 | Scud ; dense mass of clouds above. |
| | 4 | 793 | 44·0 | 43·1 | 0·9 | 0·0 | 0·0 | | | 10·0 | Uniform mass of cirro-strati ; scud to SE. |
| | 5 | 800 | 43·0 | 41·9 | 1·1 | 0·0 | 0·0 | | | 10·0 | Id., red at sunset. |
| | 6 | 805 | 42·9 | 41·2 | 1·7 | 0·0 | 0·0 | | | 10·0 | Scud. |
| | 7 | 819 | 41·0 | 39·6 | 1·4 | 0·0 | 0·0 | | | 6·0 | Haze ; clouds on horizon. |
| | 8 | 828 | 37·7 | 37·1 | 0·6 | 0·0 | 0·0 | | | 4·0 | Clouds on horizon. |
| | 9 | 820 | 37·8 | 37·3 | 0·5 | 0·0 | 0·0 | | | 1·0 | Id. |
| | 10 | 826 | 37·6 | 37·2 | 0·4 | 0·0 | 0·0 | | | 1·0 | Id. |
| | 11 | 835 | 36·9 | 35·7 | 1·2 | 0·0 | 0·0 | | | 1·5 | Id. |
| | 12 | 842 | 36·2 | 34·9 | 1·3 | 0·0 | 0·0 | | | 1·5 | Cirro-strati to E. |
| | 13 | 29·852 | 32·5 | 32·4 | 0·1 | 0·0 | 0·0 | | | 0·5 | Cirro-strati to E. |
| | 14 | 858 | 32·5 | 32·0 | 0·5 | 0·0 | 0·0 | | | 0·2 | Id. |
| | 15 | 867 | 29·9 | ... | ... | 0·0 | 0·0 | | | 0·2 | Cirro-strati and cirrous-haze on horizon. |
| | 16 | 871 | 31·0 | ... | ... | 0·0 | 0·0 | | | 0·1 | Id. |
| | 17 | 871 | 30·0 | ... | ... | 0·0 | 0·0 | | | 0·2 | Id. |
| | 18 | 877 | 30·0 | ... | ... | 0·0 | 0·0 | | | 0·2 | Patches of cirro-cumuli and cirri. |
| | 19 | 880 | 29·7 | ... | ... | 0·0 | 0·0 | | | 0·1 | Patches of cirro-strati. |
| | 20 | 899 | 34·6 | ... | ... | 0·0 | 0·0 | | | 0·2 | Masses of cirro-strati and cirri. |
| | 21 | 919 | 32·7 | ... | ... | 0·0 | 0·0 | | | 0·5 | Id. |
| | 22 | 935 | 37·3 | 35·8 | 1·5 | 0·2 | 0·2 | | | 1·0 | Cirro-cumulous-scud ; cumulo-strati on E. horizon. |
| | 23 | 954 | 36·7 | 35·0 | 1·7 | 0·2 | 0·2 | | 31 : — : — | 0·2 | Cirrous-haze to E. ; scud to SE. |
| 13 | 0 | 946 | 36·9 | 35·9 | 1·0 | 0·0 | 0·0 | | | 0·2 | Scud on horizon. |
| | 1 | 933 | 39·8 | 36·7 | 3·1 | 0·0 | 0·0 | | | 0·2 | Haze on horizon. |

The direction of the wind is indicated by the number of the point of the compass, reckoning N. = 0, E. = 8, S. = 16, W. = 24. The motions of the three strata of clouds, Sc. (scud), C.-s. (cirro-stratus), and Cir. (cirrus), are indicated in a similar manner.

Jan. 12d 22h. The wind blowing at least 0·2 lb., but there is no indication by the anemometer.

| Gött. Mean Time. | | Barometer at 32°. | Thermometers. | | | Wind. | | | Clouds, Sc. : C.-s. : Ci., moving from | Sky clouded. | Species of Clouds and Meteorological Remarks. |
|---|---|---|---|---|---|---|---|---|---|---|---|
| | | | Dry. | Wet. | Diff. | Maximum force in 1h. | Maximum force in 10m. | From | | | |
| d. | h. | in. | ° | ° | ° | lbs. | lbs. | pt. | pt. pt. pt. | 0—10. | |
| 13 | 2 | 29·938 | 40·2 | 37·3 | 2·9 | 0·0 | 0·0 | | | 0·2 | Patches of cirri to E. |
| | 3 | 938 | 40·9 | 37·2 | 3·7 | 0·1 | 0·1 | 30 | 0 : — : — | 3·0 | Scud ; cumulo-strati on E. horizon. |
| | 4 | 948 | 39·0 | 36·2 | 2·8 | 0·0 | 0·0 | | | 1·5 | Cumuli and scud on horizon. |
| | 5 | 953 | 36·7 | 34·8 | 1·9 | 0·0 | 0·0 | | 0 : — : — | 3·0 | Scud ; cumuli and cirrous-haze to N. and E. |
| | 6 | 968 | 36·4 | 34·6 | 1·8 | 0·2 | 0·2 | 31 | 0 : — : — | 3·0 | Id. |
| | 7 | 978 | 38·6 | 36·1 | 2·5 | 0·3 | 0·2 | 30 | | 5·0 | Id. |
| | 8 | 29·997 | 36·7 | 36·0 | 0·7 | 0·8 | 0·0 | 31 | | 9·0 | A shower of rain lately. |
| | 9 | 30·020 | 36·6 | 36·0 | 0·6 | 0·0 | 0·0 | | | 9·5 | Showers. |
| | 10 | 040 | 36·6 | 35·9 | 0·7 | 0·0 | 0·0 | 0 | | 9·7 | Id. |
| | 11 | 056 | 35·7 | 34·7 | 1·0 | 0·1 | 0·1 | 0 | 0 : — : — | 1·0 | Masses of scud. |
| | 12 | 071 | 36·0 | 33·9 | 2·1 | 0·6 | 1·0 | 0 | | 1·0 | Id. |
| 14 | 3 | 30·229 | | | | 1·9 | | | | | |
| | 13 | 30·234 | 24·7 | 24·6 | 0·1 | 0·0 | 0·0 | | | 0·0 | Clear. |
| | 14 | 221 | 23·5 | 23·4 | 0·1 | 0·0 | 0·0 | | | 0·2 | Haze on horizon. |
| | 15 | 216 | 22·7 | 22·5 | 0·2 | 0·0 | 0·0 | | | 0·0 | Clear. |
| | 16 | 207 | 22·3 | 22·0 | 0·3 | 0·0 | 0·0 | | | 0·0 | Id. |
| | 17 | 198 | 22·5 | 22·3 | 0·2 | 0·0 | 0·0 | | | 0·0 | Id. |
| | 18 | 186 | 23·7 | 23·3 | 0·4 | 0·0 | 0·0 | | | 0·2 | Clouds to SE. |
| | 19 | 186 | 24·0 | 23·7 | 0·3 | 0·0 | 0·0 | | | 0·0 | Clear. |
| | 20 | 181 | 22·7 | 22·7 | ... | 0·0 | 0·0 | | | 0·2 | Cirri and cirrous-haze to SE., tinged with red. |
| | 21 | 192 | 24·6 | 24·0 | 0·6 | 0·0 | 0·0 | | | 6·0 | Thin woolly and linear cirri. |
| | 22 | 191 | 26·1 | 25·6 | 0·5 | 0·0 | 0·0 | | — : — : 4 | 7·0 | Id., moving slowly. |
| | 23 | 191 | 27·6 | 27·0 | 0·6 | 0·0 | 0·0 | | — : — : 4 | 3·0 | Id., id. |
| 15 | 0 | 179 | 31·1 | 30·6 | 0·5 | 0·0 | 0·0 | | | 2·0 | Linear cirri and cirrous-haze. |
| | 1 | 149 | 32·8 | 32·0 | 0·8 | 0·0 | 0·0 | | | 3·0 | Woolly cirri and cirrous-haze. |
| | 2 | 132 | 35·8 | 34·2 | 1·6 | 0·0 | 0·0 | | | 4·0 | Id. ; cirro-strati. |
| | 3 | 128 | 36·6 | 35·1 | 1·5 | 0·0 | 0·0 | | — : — : 0 | 4·0 | Woolly and linear cirri, cirro-strati. |
| | 4 | 131 | 35·6 | 34·6 | 1·0 | 0·0 | 0·0 | | — : 0 : — | 7·0 | Cirro-cumulo-strati, patches of cirri. |
| | 5 | 144 | 33·7 | 33·0 | 0·7 | 0·0 | 0·0 | | — : 0 : 0 | 8·0 | Id., cirro-cumuli, cirri, cirro-strati. |
| | 6 | 136 | 31·6 | 32·5 | ... | 0·0 | 0·0 | | | 3·0 | Id., linear cirri. |
| | 7 | 139 | 32·2 | 32·3 | ... | 0·0 | 0·0 | | | 0·2 | Haze on E. horizon. |
| | 8 | 146 | 31·7 | 31·4 | 0·3 | 0·0 | 0·0 | | | 0·0 | Clear. |
| | 9 | 139 | 31·7 | 31·3 | 0·4 | 0·0 | 0·0 | | | 0·0 | Id. |
| | 10 | 143 | 29·6 | 29·6 | ... | 0·0 | 0·0 | | | 0·0 | Id. |
| | 11 | 142 | 30·3 | ... | ... | 0·0 | 0·0 | | | 1·0 | Cirro-strati to N. |
| | 12 | 129 | 32·2 | 31·8 | 0·4 | 0·0 | 0·0 | | | 1·0 | Streaks of cirri to N. |
| | 13 | 30·123 | 31·2 | ... | ... | 0·0 | 0·0 | | | 2·0 | Scud to NW. ; streaks of cirri. |
| | 14 | 123 | 32·7 | 32·1 | 0·6 | 0·0 | 0·0 | | | 9·5 | Scud ? |
| | 15 | 104 | 34·5 | 32·6 | 1·9 | 0·0 | 0·0 | | 26 : — : — | 9·0 | Id. |
| | 16 | 096 | 34·0 | 33·8 | 0·2 | 0·0 | 0·0 | | | 10·0 | Id. |
| | 17 | 076 | 33·2 | 33·1 | 0·1 | 0·0 | 0·0 | | | 0·2 | Streaks of cirri near horizon. |
| | 18 | 072 | 32·3 | ... | ... | 0·0 | 0·0 | | | 0·2 | Id. |
| | 19 | 082 | 31·1 | ... | ... | 0·0 | 0·0 | | | 0·5 | Id. |
| | 20 | 075 | 30·1 | ... | ... | 0·0 | 0·0 | | | 3·0 | Linear cirri ; scud to SE. |
| | 21 | 075 | 30·2 | ... | ... | 0·0 | 0·0 | | | 6·0 | Scud to SE. and on Cheviot ; cirro-cumuli to E. |
| | 22 | 071 | 29·8 | ... | ... | 0·0 | 0·0 | | — : — : 31 | 8·0 | Varieties of cirri ; cumuli, scud on Cheviot. |
| | 23 | 102 | 32·2 | 31·9 | 0·3 | 0·0 | 0·0 | | — : 28 : — | 10·0 | Thick woolly cirro-strati, striated to SE. |
| 16 | 0 | 075 | 33·3 | 32·4 | 0·9 | 0·0 | 0·0 | | — : — : 28 | 8·0 | Cirri, cirro-strati, cirro-cumuli. |
| | 1 | 065 | 32·9 | 32·3 | 0·6 | 0·0 | 0·0 | | — : — : 0 | 6·0 | Woolly cirri, cirrous-haze on horizon. |
| | 2 | 045 | 35·0 | 34·0 | 1·0 | 0·0 | 0·0 | | — : — : 0 | 6·0 | Id. |
| | 3 | 024 | 34·7 | 34·5 | 0·2 | 0·0 | 0·0 | | — : — : 30 | 8·0 | Cirro-cumuli ; cirrous-haze and woolly cirri. |
| | 4 | 028 | 34·5 | 34·0 | 0·5 | 0·0 | 0·0 | | — : 31 : — | 9·0 | Watery cir.-cum.-str. ; cirro-strati ; cirrous-haze |
| | 5 | 035 | 32·6 | 32·4 | 0·2 | 0·0 | 0·0 | | — : 31 : — | 9·5 | Id. ; cirrous-haze. |
| | 6 | 034 | 31·8 | 31·5 | 0·3 | 0·0 | 0·0 | | | 2·0 | Streaks of linear cirri. |
| | 7 | 042 | 30·1 | ... | ... | 0·0 | 0·0 | | | 1·0 | Id. to W. |

The direction of the wind is indicated by the number of the point of the compass, reckoning N. = 0, E. = 8, S. = 16, W. = 24. The motions of the three strata of clouds, Sc. (scud), C.-s. (cirro-stratus), and Cir. (cirrus), are indicated in a similar manner.

| Gött. Mean Time. | | Barometer at 32°. | Thermometers. Dry. | Wet. | Diff. | Wind. Maximum force in 1h. | 10m. | From | Clouds, Sc. : C.-s. : Ci., moving from | Sky clouded. | Species of Clouds and Meteorological Remarks. |
|---|---|---|---|---|---|---|---|---|---|---|---|
| d. | h. | in. | ° | ° | ° | lbs. | lbs. | pt. | pt. pt. pt. | 0—10. | |
| 16 | 8 | 30·045 | 29·0 | 29·6 | ... | 0·0 | 0·0 | | | 1·0 | Linear cirri ; stars rather dim. |
| | 9 | 057 | 28·7 | 28·9 | ... | 0·0 | 0·0 | | | 2·0 | Id. ; id. |
| | 10 | 054 | 30·8 | 30·9 | ... | 0·0 | 0·0 | | | 6·0 | Cirro-strati and thin cirri. |
| | 11 | 053 | 29·7 | 29·8 | ... | 0·0 | 0·0 | | | 3·0 | Id. |
| | 12 | 041 | 30·6 | 30·4 | 0·2 | 0·0 | 0·0 | | | 6·0 | Cirrous clouds. |
| | 13 | 30·030 | 31·5 | 31·3 | 0·2 | 0·0 | 0·0 | | | 4·0 | Cirrous clouds ; hazy. |
| | 14 | 023 | 33·6 | 32·5 | 1·1 | 0·0 | 0·0 | | | 7·0 | Id. ; id. |
| | 15 | 014 | 35·1 | 34·6 | 0·5 | 0·0 | 0·0 | | | 9·5 | Id. |
| | 16 | 020 | 35·7 | 35·0 | 0·7 | 0·0 | 0·0 | | | 10·0 | Id. |
| | 17 | 006 | 38·1 | 37·1 | 1·0 | 0·0 | 0·0 | | | 5·0 | Id. |
| | 18 | 30·004 | 37·3 | 36·8 | 0·5 | 0·0 | 0·0 | | | 0·5 | Thin cirro-strati on horizon. |
| | 19 | 29·995 | 36·7 | 36·3 | 0·4 | 0·0 | 0·0 | | | 0·5 | Id. |
| | 20 | 29·998 | 35·0 | 35·0 | ... | 0·0 | 0·0 | | 20 : — : — | 6·0 | Scud to SE. ; woolly and diffuse cirri. |
| | 21 | 30·020 | 34·9 | 34·9 | ... | 0·0 | 0·0 | | 28 : — : — | 9·5 | Scud ; linear and mottled cirri ; cirrous-haze. |
| | 22 | 033 | 37·7 | 37·7 | ... | 0·0 | 0·0 | | | 9·5 | Woolly and linear cirri ; cirro-strati ; cirrous-haze. |
| | 23 | 044 | 37·4 | 37·6 | ... | 0·0 | 0·0 | | | 7·0 | Woolly cirri, cirrous-haze ; scud on S. horizon. |
| 17 | 0 | 030 | 40·3 | 39·9 | 0·4 | 0·0 | 0·0 | | | 7·0 | Woolly cirri and cirrous-haze. |
| | 1 | 30·024 | 42·5 | 41·3 | 1·2 | 0·0 | 0·0 | | | 7·0 | Id. |
| | 2 | 29·996 | 44·1 | 42·7 | 1·4 | 0·0 | 0·0 | 20 | — : — : 2 | 7·0 | Thin cirri, ribbed in some places. |
| | 3 | 991 | 43·5 | 42·0 | 1·5 | 0·0 | 0·0 | 20 | — : — : 2 | 6·0 | Diffuse cirri and cirrous-haze. |
| | 4 | 990 | 41·1 | 40·3 | 0·8 | 0·0 | 0·0 | 20 | — : — : 2 | 7·0 | Diffuse cirri. |
| | 5 | 986 | 36·4 | 36·6 | ... | 0·0 | 0·0 | | — : — : 2 | 7·0 | Id. |
| | 6 | 983 | 35·6 | 35·0 | 0·6 | 0·0 | 0·0 | | — : — : 2 | 4·0 | Id., much tinged with red. |
| | 7 | 983 | 34·0 | 33·8 | 0·2 | 0·0 | 0·0 | | | 4·0 | Id. |
| | 8 | 969 | 35·8 | 35·6 | 0·2 | 0·0 | 0·0 | | | 3·0 | Id. |
| | 9 | 965 | 34·1 | 34·0 | 0·1 | 0·0 | 0·0 | | | 0·5 | Id. |
| | 10 | 969 | 33·1 | 33·1 | ... | 0·0 | 0·0 | | | 0·5 | Hazy. |
| | 11 | 962 | 33·1 | 33·0 | 0·1 | 0·0 | 0·0 | | | 0·5 | Id. |
| | 12 | 962 | 33·2 | 32·9 | 0·3 | 0·0 | 0·0 | | | 0·0 | Stars bright. |
| | 13 | 29·950 | 32·9 | 32·5 | 0·4 | 0·0 | 0·0 | | | 0·2 | Stars bright ; streaks of cirri to N. |
| | 14 | 953 | 32·5 | 32·1 | 0·4 | 0·0 | 0·0 | | | 0·1 | Id. ; id. |
| | 15 | 936 | 34·1 | 33·7 | 0·4 | 0·0 | 0·0 | | | 0·0 | Id. |
| | 16 | 934 | 34·0 | 33·6 | 0·4 | 0·2 | 0·1 | 23 | | 0·1 | Id. ; cirri to S. |
| | 17 | 919 | 34·4 | 33·8 | 0·6 | 0·2 | 0·1 | 20 | | 0·1 | Id. ; id. |
| | 18 | 915 | 33·7 | 33·3 | 0·4 | 0·2 | 0·1 | 20 | | 0·0 | Id. |
| | 19 | 914 | 39·5 | 38·3 | 1·2 | 0·2 | 0·1 | 20 | | 0·2 | Id. ; id. |
| | 20 | 919 | 39·3 | 38·3 | 1·0 | 0·1 | 0·1 | 20 | — : — : 26 | 3·0 | Woolly and linear cirri ; cirro-cumuli. |
| | 21 | 925 | 41·2 | 39·7 | 1·5 | 0·5 | 0·2 | 20 | 25 : 26 : — | 4·0 | Pat. of scud ; mottled cir.-str. in zen. ; cir.-cum., red. |
| | 22 | 907 | 43·3 | 41·7 | 1·6 | 0·3 | 0·2 | 21 | 25 : 25 : — | 7·0 | Scud ; cir.-cum.-str., cirro-cumuli, cirro-strati. |
| | 23 | 910 | 45·6 | 43·0 | 2·6 | 0·3 | 0·6 | 22 | 24 : 26 : 26 | 3·5 | Id. ; cirro-cumuli, cirro-strati, mottled cirri. |
| 18 | 0 | 886 | 45·8 | 43·0 | 2·8 | 1·1 | 0·3 | 21 | 25 : 25 : — | 2·0 | Id. ; id., id., id. |
| | 1 | 875 | 47·0 | 43·5 | 3·5 | 2·4 | 0·2 | 22 | 24 : — : — | 8·0 | Id., loose cumuli ; cirri. |
| | 2 | 825 | 47·1 | 43·4 | 3·7 | 0·6 | 1·8 | 23 | 24 : — : — | 4·0 | Id., id. ; id. |
| | 3 | 799 | 47·6 | 43·1 | 4·5 | 3·2 | 1·5 | 25 | 26 : — : — | 8·5 | Thick scud, loose cumuli ; patches of cirri. |
| | 4 | 794 | 46·6 | 43·0 | 3·6 | 1·7 | 0·2 | 20 | 25 : — : — | 6·5 | Id., id. |
| | 5 | 751 | 46·6 | 42·2 | 4·4 | 3·2 | 2·7 | 23 | 24 : — : — | 8·0 | Scud ; sky milky. |
| | 6 | 743 | 46·0 | 42·4 | 3·6 | 2·4 | 1·5 | | 24 : — : — | 9·0 | Id. ; id. |
| | 7 | 731 | 45·2 | 41·8 | 3·4 | 2·0 | 0·4 | 26 | 24 : — : — | 4·0 | Id. |
| | 8 | 714 | 45·9 | 41·8 | 4·1 | 1·1 | 2·7 | 21 | | 10·0 | Light rain. |
| | 9 | 681 | 45·5 | 42·2 | 3·3 | 2·3 | 2·2 | 24 | | 10·0 | Scud. |
| | 10 | 662 | 45·1 | 41·3 | 3·8 | 4·4 | 1·8 | 24 | | 0·2 | Id. |
| | 11 | 652 | 47·0 | 42·9 | 4·1 | 3·3 | 2·6 | 24 | 24 : — : — | 6·0 | Id. |
| | 12 | 620 | 48·2 | 45·0 | 3·2 | 3·5 | 2·9 | | | 10·0 | Id. |
| | 13 | 29·592 | 48·4 | 44·6 | 3·8 | 6·2 | 4·2 | 27 | | 4·0 | Scud. |
| | 14 | 603 | 45·5 | 41·0 | 4·5 | 3·7 | 1·0 | 21 | | 0·0 | Clear. |

The direction of the wind is indicated by the number of the point of the compass, reckoning N. = 0, E. = 8, S. = 16, W. = 24. The motions of the three strata of clouds, Sc. (scud), C.-s. (cirro-stratus), and Cir. (cirrus), are indicated in a similar manner.

| Gött. Mean Time. | | Barometer at 32°. | Thermometers. | | | Wind. | | | Clouds, Sc. : C.-s. : Ci., moving from | Sky clouded. | Species of Clouds and Meteorological Remarks. |
|---|---|---|---|---|---|---|---|---|---|---|---|
| | | | Dry. | Wet. | Diff. | Maximum force in 1h. | Maximum force in 10m. | From | | | |
| d. | h. | in. | ° | ° | ° | lbs. | lbs. | pt. | pt. pt. pt. | 0—10. | |
| 18 | 15 | 29·653 | 43·4 | 39·3 | 4·1 | 1·3 | 2·0 | 20 | | 2·0 | Scud to S. |
| | 16 | 648 | 43·0 | 38·7 | 4·3 | 3·0 | 2·4 | 23 | | 2·0 | Id.; haze to S. and E. |
| | 17 | 647 | 42·6 | 38·4 | 4·2 | 1·7 | 1·1 | 26 | | 2·0 | Id. |
| | 18 | 623 | 40·8 | 38·0 | 2·8 | 1·0 | 0·6 | 21 | | 9·0 | Scud. |
| | 19 | 611 | 41·0 | 38·0 | 3·0 | 0·9 | 1·2 | 24 | | 5·0 | Id. to S. and E. |
| | 20 | 596 | 41·0 | 38·0 | 3·0 | 1·2 | 0·7 | 23 | | 10·0 | Id. |
| | 21 | 571 | 42·1 | 38·8 | 3·3 | 1·8 | 1·1 | 23 | 27 : — : — | 10·0 | Id.; cirrous clouds. |
| | 22 | 563 | 43·0 | 39·3 | 3·7 | 2·4 | 2·4 | 23 | 27 : 28 : — | 10·0 | Id.; woolly cirro-cumuli; linear cirri, cirrous-haze. |
| | 23 | 558 | 43·1 | 39·3 | 3·8 | 3·3 | 2·1 | 28 | | 10·0 | The same; cirrous clouds more homogeneous. |
| 19 | 0 | 542 | 43·3 | 39·3 | 4·0 | 3·9 | 3·0 | 28 | | 10·0 | Id.; id. |
| | 1 | 554 | 42·7 | 39·7 | 3·0 | 2·5 | 1·5 | 28 | | 10·0 | Id.; light rain since 0h. |
| | 2 | 570 | 42·9 | 38·1 | 4·8 | 2·5 | 1·3 | 29 | 29 : 29 : — | 9·7 | Thin scud; cir.-cum.-scud; cir.-str.; cir.; cir.-haze. |
| | 3 | 591 | 39·5 | 36·4 | 3·1 | 2·7 | 3·3 | 30 | 30 : — : — | 9·9 | Scud; cirri; nimbi; commencing to rain and hail. |
| | 4 | 625 | 38·7 | 35·6 | 3·1 | 1·4 | 0·1 | 30 | 29 : — : — | 9·8 | Thin scud; cirri; showers passed to SSE. |
| | 5 | 641 | 38·3 | 35·4 | 2·9 | 0·0 | 0·0 | | | 10·0 | Scud; cirri. |
| | 6 | 666 | 38·3 | 35·2 | 3·1 | 0·2 | 0·0 | | 26 : — : — | 10·0 | Id. |
| | 7 | 656 | 36·3 | 34·1 | 2·2 | 0·0 | 0·0 | | | 7·0 | Cirrous-haze; cirro-strati. |
| | 8 | 664 | 35·4 | 33·5 | 1·9 | 0·0 | 0·0 | | | 7·0 | Snow from a very heavy cloud. |
| | 9 | 678 | 35·4 | 33·3 | 2·1 | 0·0 | 0·0 | | | 9·0 | Scud. |
| | 10 | 703 | 35·2 | 33·0 | 2·2 | 0·0 | 0·0 | | | 10·0 | Id. |
| | 11 | 726 | 34·9 | 31·8 | 3·1 | 0·1 | 0·1 | 29 | | 8·0 | Id. |
| | 12 | 731 | 34·0 | 31·1 | 2·9 | 0·2 | 0·2 | 29 | | 9·0 | Id. |
| | 13 | 29·751 | 34·4 | 30·9 | 3·5 | 0·2 | 0·2 | 30 | | 8·0 | Scud. |
| | 14 | 747 | 33·1 | 30·7 | 2·4 | 0·2 | 0·0 | | | 10·0 | Id. |
| | 15 | 745 | 32·3 | 29·6 | 2·7 | 0·2 | 0·0 | | | 2·5 | Id. |
| | 16 | 751 | 33·1 | 29·7 | 3·4 | 0·0 | 0·0 | | | 8·0 | Id. |
| | 17 | 764 | 33·8 | 29·3 | 4·5 | 0·1 | 0·1 | 27 | | 2·0 | Id. |
| | 18 | 755 | 32·1 | 28·9 | 3·2 | 0·2 | 0·2 | 27 | | 2·0 | Id. |
| | 19 | 765 | 32·4 | 28·8 | 3·6 | 0·2 | 0·0 | | | 2·0 | Id. |
| | 20 | 778 | 33·7 | 29·8 | 3·9 | 0·2 | 0·2 | 28 | 29 : — : — | 6·5 | Id. |
| | 21 | 801 | 32·3 | 29·4 | 2·9 | 0·2 | 0·1 | 28 | 29 : — : — | 4·0 | Id.; cirro-strati, cirrous-haze. |
| | 22 | 802 | 31·9 | 30·7 | 1·2 | 0·8 | 0·4 | 27 | | 2·0 | Id.; linear and mottled cirri. |
| | 23 | 810 | 35·0 | 31·3 | 3·7 | 0·5 | 0·1 | 26 | | 1·5 | Id.; cirrous-haze. |
| 20 | 0 | 818 | 37·3 | 33·0 | 4·3 | 0·0 | 0·0 | | 30 : — : — | 8·0 | Id.; linear and mottled cirri; cirro-strati. |
| | 1 | 827 | 38·3 | 33·7 | 4·6 | 0·3 | 0·0 | | 30 : — : — | 9·0 | Id.; cirri. |
| | 2 | 817 | 39·0 | 34·3 | 4·7 | 0·5 | 0·5 | 28 | 30 : — : — | 10·0 | Id. |
| | 3 | 807 | 38·6 | 34·0 | 4·6 | 0·4 | 0·2 | 24 | 31 : — : — | 10·0 | Id.; linear and woolly cirri. |
| | 4 | 808 | 37·1 | 33·1 | 4·0 | 0·0 | 0·0 | | 31 : — : — | 9·0 | Loose scud; cirro-stratous-scud; cirro-strati. |
| | 5 | 803 | 35·8 | 32·5 | 3·3 | 0·0 | 0·0 | | 30 : — : — | 10·0 | Cirro-cumulous-scud; linear cirri and cirro-strati. |
| | 6 | 803 | 35·1 | 32·8 | 2·3 | 0·0 | 0·0 | | | 10·0 | Thick mass of cirro-stratus. |
| | 7 | 795 | 34·7 | 32·7 | 2·0 | 0·0 | 0·0 | | | 10·0 | Dark. |
| | 8 | 766 | 35·0 | 33·0 | 2·0 | 0·0 | 0·0 | | | 8·0 | Some stars dimly visible. |
| | 9 | 768 | 36·6 | 34·6 | 2·0 | 0·1 | 0·0 | | | 10·0 | Dense mass of clouds. |
| | 10 | 747 | 37·0 | 35·6 | 1·4 | 0·0 | 0·0 | | | 10·0 | Id. |
| | 11 | 724 | 36·9 | 35·9 | 1·0 | 0·0 | 0·0 | | | 8·0 | Id. |
| | 12 | 694 | 35·9 | 35·5 | 0·4 | 0·0 | 0·0 | | | 1·5 | Haze on horizon. |
| 21 | 0 | | | | | 0·4 | | | | | |
| | 13 | 29·693 | 35·7 | 35·0 | 0·7 | 0·8 | 0·0 | 22 | | 0·2 | Streaks of cirri near horizon. |
| | 14 | 697 | 32·3 | 32·1 | 0·2 | 0·0 | 0·0 | | | 0·1 | Id. |
| | 15 | 690 | 31·6 | 31·2 | 0·4 | 0·0 | 0·0 | | | 0·2 | Id. |
| | 16 | 683 | 30·3 | 30·3 | ... | 0·0 | 0·0 | | | 0·7 | Cirri to N. |
| | 17 | 677 | 30·3 | 30·8 | ... | 0·0 | 0·0 | | | 1·0 | Id. to E. |
| | 18 | 676 | 30·3 | 31·8 | ... | 0·0 | 0·0 | | | 2·0 | Id. to N. and E. |
| | 19 | 679 | 33·6 | 32·6 | 1·0 | 0·0 | 0·0 | 21 | | 9·5 | Cirri?; stars seen in zenith. |
| | 20 | 683 | 34·0 | 33·8 | 0·2 | 0·0 | 0·0 | 21 | | 10·0 | Cirrous clouds? |

The direction of the wind is indicated by the number of the point of the compass, reckoning N. = 0, E. = 8, S. = 16, W. = 24. The motions of the three strata of clouds, Sc. (scud), C.-s. (cirro-stratus), and Cir. (cirrus), are indicated in a similar manner.

| Gött. Mean Time. | | Barometer at 32°. | Thermometers. Dry. | Wet. | Diff. | Wind. Maximum force in 1h. | 10m. | From | Clouds, Sc. : C.-s. : Ci., moving from | Sky clouded. | Species of Clouds and Meteorological Remarks. |
|---|---|---|---|---|---|---|---|---|---|---|---|
| d. | h. | in. | ° | ° | ° | lbs. | lbs. | pt. | pt. pt. pt. | 0—10. | |
| 21 | 21 | 29·691 | 34·6 | 34·4 | 0·2 | 0·0 | 0·0 | | — : 0 : — | 9·7 | Cir.-str.-scud, red to SE.; cir.-cum.-str. to N. |
| | 22 | 689 | 35·3 | 34·7 | 0·6 | 0·0 | 0·0 | | — : 2 : — | 9·5 | Cirro-cumulo-strati. |
| | 23 | 685 | 38·2 | 36·9 | 1·3 | 0·0 | 0·0 | | — : 1 : — | 9·7 | Id. |
| 22 | 0 | 700 | 37·6 | 36·8 | 0·8 | 0·0 | 0·0 | 20 | — : 1 : — | 5·0 | Id. |
| | 1 | 695 | 41·8 | 39·1 | 2·7 | 0·0 | 0·0 | 28 | | 2·5 | Id., woolly cirri. |
| | 2 | 690 | 45·6 | 41·4 | 4·2 | 0·2 | 0·0 | | — : 1 : — | 5·0 | Id., id. |
| | 3 | 695 | 45·8 | 41·4 | 4·4 | 0·2 | 0·0 | | — : 1 : 1 | 6·0 | Id., id. |
| | 4 | 712 | 45·2 | 41·5 | 3·7 | 0·1 | 0·0 | | — : 30 : — | 9·7 | Id. |
| | 5 | 719 | 43·6 | 40·4 | 3·2 | 0·0 | 0·0 | | — : 30 : — | 10·0 | Id. |
| | 6 | 726 | 43·3 | 39·9 | 3·4 | 0·0 | 0·0 | 30 | — : 30 : — | 9·0 | Id. |
| | 7 | 737 | 42·4 | 39·3 | 3·1 | 0·0 | 0·0 | 28 | | 8·5 | Id.; stars indistinct. |
| | 8 | 756 | 40·7 | 38·9 | 1·8 | 0·0 | 0·0 | | | 10·0 | Cirrous clouds. |
| | 9 | 760 | 40·7 | 38·6 | 2·1 | 0·0 | 0·0 | | | 9·0 | Id.; stars dim. |
| | 10 | 777 | 38·8 | 37·7 | 1·1 | 0·0 | 0·0 | | | 6·5 | Id.; id. |
| | 11 | 794 | 39·3 | 38·0 | 1·3 | 0·0 | 0·0 | | | 10·0 | Dark. |
| | 12 | 801 | 39·4 | 38·2 | 1·2 | 0·0 | 0·0 | | | 10·0 | Id.; a few drops of rain. |
| | 13 | 29·803 | 38·7 | 37·8 | 0·9 | 0·0 | 0·0 | | | 10·0 | Dark; a few drops of rain. |
| | 14 | 811 | 38·9 | 38·0 | 0·9 | 0·0 | 0·0 | | | 10·0 | Id.; id. |
| | 15 | 819 | 38·4 | 37·8 | 0·6 | 0·0 | 0·0 | | | 10·0 | Id.; id. |
| | 16 | 822 | 37·6 | 37·0 | 0·6 | 0·0 | 0·0 | | | 10·0 | Id.; id. |
| | 17 | 832 | 37·3 | 36·9 | 0·4 | 0·0 | 0·0 | | | 10·0 | Id. |
| | 18 | 828 | 37·1 | 36·9 | 0·2 | 0·0 | 0·0 | | | 9·5 | A few stars visible. |
| | 19 | 823 | 37·0 | 36·6 | 0·4 | 0·0 | 0·0 | | | 9·5 | Id. |
| | 20 | 839 | 36·9 | 36·5 | 0·4 | 0·0 | 0·0 | | | 10·0 | Cirro-cumulous-scud. |
| | 21 | 855 | 36·6 | 36·2 | 0·4 | 0·0 | 0·0 | 16 | — : 24 : — | 10·0 | Id., having an internal motion. |
| | 22 | 857 | 36·8 | 36·4 | 0·4 | 0·0 | 0·0 | 16 | | 8·2 | Id., clearing off, sky to SW.; cir.-str. |
| | 23 | 860 | 35·7 | 36·0 | ··· | 0·0 | 0·0 | | | 1·2 | Id.; woolly cirro-cumuli, cirri. |
| 23 | 0 | 863 | 39·9 | 38·3 | 1·6 | 0·0 | 0·0 | 22 | — : — : 28 | 2·5 | Mottled and pectinated cirri and cirro-cumuli. |
| | 1 | 866 | 40·7 | 39·7 | 1·0 | 0·0 | 0·0 | 20 | | 3·0 | The same; patches of cumuli to SE. |
| | 2 | 862 | 43·3 | 40·1 | 3·2 | 0·0 | 0·0 | 18 | 20 : 28 : — | 4·0 | Zig-zag cirri, cirro-strati, cir.-cum.; scud, loose cum., [cir.-cum.-sc. |
| | 3 | 860 | 42·9 | 40·1 | 2·8 | 0·0 | 0·0 | 26 | — : 20 : — | 9·0 | Cirro-cumulous-scud; cirri. |
| | 4 | 863 | 40·9 | 39·8 | 1·1 | 0·0 | 0·0 | 18 | — : 24 : 28 | 1·5 | Id.; cirro-cumuli; patches of cirri. |
| | 5 | 868 | 37·8 | 35·9 | 1·9 | 0·0 | 0·0 | 17 | — : 26 : — | 3·0 | Id. to N. |
| | 6 | 876 | 35·7 | 35·0 | 0·7 | 0·0 | 0·0 | 21 | — : 25 : — | 6·0 | Id. |
| | 7 | 884 | 32·0 | 32·3 | ··· | 0·0 | 0·0 | | | 1·5 | Thin cirri to E. |
| | 8 | 889 | 31·8 | 32·1 | ··· | 0·0 | 0·0 | | | 0·2 | Cirrous-haze on E. horizon. |
| | 9 | 898 | 31·1 | 31·0 | 0·1 | 0·0 | 0·0 | | | 0·0 | Clear. |
| | 10 | 903 | 28·9 | 30·1 | ··· | 0·0 | 0·0 | | | 0·0 | Id. |
| | 11 | 903 | 28·9 | 29·0 | ··· | 0·0 | 0·0 | | | 0·0 | Id., hazy on horizon. |
| | 12 | 908 | 29·9 | 29·2 | 0·7 | 0·0 | 0·0 | | | 0·0 | Id., id. |
| | 13 | 29·909 | 30·9 | 30·5 | 0·4 | 0·0 | 0·0 | | | 0·0 | Clear, hazy on horizon. |
| | 14 | 907 | 30·0 | 30·5 | ··· | 0·0 | 0·0 | | | 0·0 | Id., id. |
| | 15 | 912 | 30·0 | 29·7 | 0·3 | 0·0 | 0·0 | | | 0·0 | Id., id. |
| | 16 | 916 | 28·3 | 28·5 | ··· | 0·0 | 0·0 | | | 0·0 | Id. |
| | 17 | 909 | 27·7 | 27·5 | 0·2 | 0·0 | 0·0 | | | 0·0 | Id. |
| | 18 | 910 | 27·9 | 27·5 | 0·4 | 0·0 | 0·0 | | | 0·0 | Id. |
| | 19 | 895 | 28·3 | 28·4 | ··· | 0·0 | 0·0 | | | 0·0 | Id. |
| | 20 | 904 | 30·2 | 29·7 | 0·5 | 0·0 | 0·0 | | | 0·2 | Cirro-strati on horizon. |
| | 21 | 912 | 29·4 | 29·7 | ··· | 0·0 | 0·0 | 20 | | 0·5 | Id. |
| | 22 | 914 | 29·0 | 29·6 | ··· | 0·0 | 0·0 | | | 0·5 | Id. |
| | 23 | 921 | 34·5 | 32·5 | 2·0 | 0·0 | 0·0 | | | 0·2 | Cirro-strati and cirrous-haze on E. horizon. |
| 24 | 0 | 922 | 37·0 | 36·1 | 0·9 | 0·0 | 0·0 | 20 | | 0·1 | Id. to E. |
| | 1 | 920 | 40·3 | 38·8 | 1·5 | 0·0 | 0·0 | | | 1·0 | Scud to S., SW., and on Cheviot; haze on E. horizon. |
| | 2 | 918 | 41·9 | 40·8 | 1·1 | 0·0 | 0·0 | 20 | | 0·5 | Patches of scud; cirrous-haze on E. horizon. |
| | 3 | 912 | 42·9 | 40·9 | 2·0 | 0·1 | 0·1 | 18 | | 0·5 | Scud to NW. and on Cheviot; cir.-haze on E. hor. |
| | 4 | 907 | 41·9 | 40·0 | 1·9 | 0·2 | 0·1 | 18 | — : 22 : — | 2·0 | Cirro-cumulo-strati to W.; cirrous-haze to E. |

The direction of the wind is indicated by the number of the point of the compass, reckoning N. = 0, E. = 8, S. = 16, W. = 24. The motions of the three strata of clouds, Sc. (scud), C.-s. (cirro-stratus), and Cir. (cirrus), are indicated in a similar manner.

| Gött. Mean Time. | | Barometer at 32°. | Thermometers. Dry. | Wet. | Diff. | Wind. Maximum force in 1h. | 10m. | From | Clouds, Sc. : C.-s. : Ci., moving from | Sky clouded. | Species of Clouds and Meteorological Remarks. |
|---|---|---|---|---|---|---|---|---|---|---|---|
| d. | h. | in. | ° | ° | ° | lbs. | lbs. | pt. | pt. pt. pt. | 0—10. | |
| 24 | 5 | 29·912 | 38·2 | 37·5 | 0·7 | 0·2 | 0·0 | 18 | | 2·0 | Cirro-cumuli, cirro-strati; cirrous-haze to E. |
| | 6 | 905 | 36·4 | 36·0 | 0·4 | 0·1 | 0·1 | 21 | | 2·0 | Cir.-cum. and cir.-str. to S. and SW.; woolly cirri. |
| | 7 | 925 | 34·2 | 34·1 | 0·1 | 0·0 | 0·0 | | | 1·5 | Cirro-strati to S. and W.; cirrous-haze on horizon. |
| | 8 | 913 | 39·1 | 37·9 | 1·2 | 0·0 | 0·0 | | | 7·0 | Cirro-cumulo-strati, woolly cirri; dark clouds to W. |
| | 9 | 903 | 39·9 | 38·3 | 1·6 | 0·0 | 0·2 | 20 | — : — : 28 | 9·5 | Woolly cirri; cirro-cumuli, cirrous-haze to E. |
| | 10 | 909 | 41·3 | 39·4 | 1·9 | 0·2 | 0·3 | | | 10·0 | Scud and cirro-strati. |
| | 11 | 916 | 41·9 | 40·0 | 1·9 | 0·5 | 0·4 | 20 | | 7·0 | Chiefly loose scud. |
| | 12 | 931 | 42·9 | 41·0 | 1·9 | 1·2 | 0·9 | 20 | | 10·0 | Scud. |
| | 13 | 29·923 | 41·8 | 40·8 | 1·0 | 0·6 | 0·0 | | | 9·0 | Thin scud. |
| | 14 | 921 | 42·7 | 41·6 | 1·1 | 0·3 | 0·0 | 20 | | 9·5 | Id. |
| | 15 | 908 | 41·3 | 41·0 | 0·3 | 0·5 | 0·1 | 18 | 28 : — : — | 4·0 | Id. |
| | 16 | 911 | 38·9 | 38·6 | 0·3 | 0·1 | 0·0 | 18 | | 1·2 | Cirrous-haze; stars dim. |
| | 17 | 899 | 40·7 | 40·0 | 0·7 | 1·0 | 0·6 | 20 | | 1·0 | Cirro-strati on horizon; stars dim. |
| | 18 | 891 | 42·2 | 41·3 | 0·9 | 0·9 | 0·3 | 20 | | 10·0 | Scud, &c. |
| | 19 | 873 | 41·3 | 40·4 | 0·9 | 0·9 | 0·5 | 18 | | 10·0 | Id.; cirrous clouds. |
| | 20 | 848 | 41·9 | 41·0 | 0·9 | 0·6 | 1·1 | 19 | 21 : — : — | 10·0 | Thin scud; homogeneous sheet of thin cirri. |
| | 21 | 838 | 43·5 | 42·4 | 1·1 | 1·1 | 0·3 | 20 | 21 : — : — | 10·0 | Scud. |
| | 22 | 807 | 44·3 | 43·3 | 1·0 | 1·3 | 0·5 | 20 | 21 : — : — | 10·0 | Id. |
| | 23 | 817 | 44·9 | 43·9 | 1·0 | 0·6 | 0·3 | 20 | 22 : — : — | 10·0 | Id.; drops of rain. |
| 25 | 0 | 768 | 46·1 | 44·0 | 2·1 | 1·5 | 1·1 | 19 | 21 : — : — | 10·0 | Id. |
| | 1 | 727 | 46·3 | 44·2 | 2·1 | 1·6 | 1·3 | | 21 : — : — | 10·0 | Id. |
| | 2 | 671 | 44·8 | 44·4 | 0·4 | 2·5 | 2·1 | 20 | 20 : — : — | 10·0 | Loose scud; denser scud above; heavy shower since 1h. |
| | 3 | 642 | 46·1 | 45·0 | 1·1 | 2·0 | 1·6 | 20 | 23 : — : — | 9·9 | Loose ragged scud. |
| | 4 | 653 | 48·0 | 45·7 | 2·3 | 2·7 | 2·3 | 24 | 26 : — : — | 9·0 | Loose scud. |
| | 5 | 697 | 47·3 | 44·4 | 2·9 | 1·8 | 1·2 | 25 | 26 : — : — | 3·0 | Id.; cirro-strati. |
| | 6 | 770 | 46·8 | 43·0 | 3·8 | 3·1 | 3·5 | 30 | 30 : — : — | 2·0 | Scud; cirri to W., tinged with red. |
| | 7 | 824 | 44·3 | 41·0 | 3·3 | 1·1 | 0·0 | | — : — : 24 | 9·0 | Woolly cirri; cirro-strati and cirrous-haze to E. |
| | 8 | 857 | 42·9 | 40·4 | 2·5 | 0·0 | 0·0 | | | 2·5 | Thin cirro-cumulous-scud round horizon. |
| | 9 | 892 | 41·5 | 39·4 | 2·1 | 0·0 | 0·0 | | | 5·0 | Id.; cirro-strati to S. and E. |
| | 10 | 925 | 38·6 | 37·1 | 1·5 | 0·0 | 0·0 | | | 1·0 | Cirrous-haze. |
| | 11 | ..... | ... | ... | ... | ... | ... | | | ... | |
| | 12 | 939 | 36·5 | 34·7 | 1·8 | 0·2 | 0·0 | | | 1·0 | Cirro-strati and cirrous-haze on horizon. |
| | 13 | 29·950 | 36·1 | 33·9 | 2·2 | 0·0 | 0·0 | | | 0·5 | Cirro-strati and cirrous-haze on horizon. |
| | 14 | 950 | 37·1 | 34·7 | 2·4 | 0·1 | 0·0 | | | 0·5 | Id. |
| | 15 | 950 | 38·7 | 35·9 | 2·8 | 0·2 | 0·1 | 21 | | 0·2 | Cirrous haze on horizon. |
| | 16 | 944 | 38·1 | 36·0 | 2·1 | 0·2 | 0·1 | 23 | | 0·0 | Hazy near horizon. |
| | 17 | 950 | 38·7 | 36·3 | 2·4 | 0·4 | 0·0 | 22 | | 0·0 | Id. |
| | 18 | 953 | 37·7 | 36·1 | 1·6 | 0·0 | 0·0 | 22 | | 0·0 | Id. |
| | 19 | 956 | 35·9 | 34·9 | 1·0 | 0·2 | 0·0 | | | 0·2 | Cirro-strati? |
| | 20 | 944 | 40·0 | 37·5 | 2·5 | 0·4 | 0·4 | 22 | | 0·5 | Thin cirri; cirro-strati to E. and SE. |
| | 21 | 954 | 39·6 | 37·3 | 2·3 | 0·8 | 0·4 | 22 | 24 : — : 29 | 5·0 | Woolly and mixed cirri, cir.-cum.; scud on Cheviot. |
| | 22 | 960 | 41·2 | 38·2 | 3·0 | 0·8 | 0·3 | 23 | | 7·0 | Cirri, cirro-cumuli, cirro-strati. |
| | 23 | 960 | 43·6 | 39·6 | 4·0 | 1·3 | 0·9 | 26 | | 4·0 | Cirri, cirro-strati. |
| 26 | 0 | 950 | 44·9 | 40·7 | 4·2 | 1·8 | 2·3 | 26 | | 4·0 | Reticulated cirri, cir.-str. near hor., scud on Cheviot. |
| | 1 | 971 | 45·9 | 41·2 | 4·7 | 1·8 | 1·8 | 26 | | 0·7 | Cirri and cirro-strati on horizon. |
| | 2 | 29·979 | 46·3 | 42·0 | 4·3 | 2·8 | 0·2 | 25 | 27 : 29 : — | 1·0 | Varying patches of scud; cirri, cirro-strati to S. |
| | 3 | 30·002 | 46·5 | 42·4 | 4·1 | 0·4 | 0·2 | 26 | 27 : 29 : — | 3·5 | Scud; woolly cirro-strati; fine cirri. |
| | 4 | 29·998 | 46·3 | 42·1 | 4·2 | 1·6 | 0·8 | 25 | | 6·0 | Id.; id; id. |
| | 5 | 30·009 | 44·6 | 41·1 | 3·5 | 0·6 | 0·0 | 25 | 27 : 29 : — | 8·0 | Occasional patches of scud; woolly cirro-strati; cirri. |
| | 6 | 026 | 41·1 | 39·9 | 1·2 | 0·0 | 0·0 | 20 | 29 : — : — | 7·0 | Scud, causing a lunar corona; cirri, tinged with red. |
| | 7 | 024 | 42·4 | 40·7 | 1·7 | 0·0 | 0·0 | | | 0·5 | Patches of scud and cirri. |
| | 8 | 024 | 43·8 | 41·7 | 2·1 | 0·2 | 0·1 | 23 | — : 30 : — | 5·0 | Cirro-cumulo-strati and cirro-cumuli; lunar corona. |
| | 9 | 016 | 42·1 | 40·9 | 1·2 | 0·2 | 0·1 | 24 | | 1·0 | Cirro-strati to SW. |
| | 10 | 012 | 42·3 | 41·2 | 1·1 | 0·0 | 0·0 | | | 3·0 | Light cirri; cirro-strati near horizon. |
| | 11 | 001 | 41·8 | 40·9 | 0·9 | 0·0 | 0·0 | | | 4·0 | Cirro-strati near horizon; linear cirri in zenith. |
| | 12 | 013 | 45·9 | 43·7 | 2·2 | 0·3 | 0·1 | 22 | | 10·0 | Scud. |

The direction of the wind is indicated by the number of the point of the compass, reckoning N. = 0, E. = 8, S. = 16, W. = 24. The motions of the three strata of clouds, Sc. (scud), C.-s. (cirro-stratus), and Cir. (cirrus), are indicated in a similar manner.

Jan. 25d 21h. Woolly and mixed cirri and cirro-cumuli radiating from SSE.; fine cirri above in long hairs radiating from SW by S.; these hairs form portions of ellipses which have their centre about the SSE. point of the horizon.

| Gött. Mean Time. | | Barometer at 32°. | Thermometers. Dry. | Wet. | Diff. | Wind. Maximum force in 1h. | 10m. | From | Clouds, Sc. : C.-s. : Ci., moving from | Sky clouded. | Species of Clouds and Meteorological Remarks. |
|---|---|---|---|---|---|---|---|---|---|---|---|
| d. | h. | in. | ° | ° | ° | lbs. | lbs. | pt. | pt. pt. pt. | 0—10. | |
| 26 | 13 | 29·977 | 46·1 | 43·1 | 3·0 | 0·5 | 0·2 | 23 | | 10·0 | Scud. |
| | 14 | 921 | 46·0 | 42·8 | 3·2 | 0·5 | 0·3 | 20 | | 9·7 | Id.; sky to NW. |
| | 15 | 923 | 45·1 | 42·3 | 2·8 | 0·5 | 0·8 | 22 | | 9·0 | Id.; id. |
| | 16 | 922 | 46·1 | 42·7 | 3·4 | 0·9 | 0·5 | 24 | | 9·7 | Id. |
| | 17 | 893 | 45·4 | 42·5 | 2·9 | 0·2 | 0·1 | 20 | | 8·0 | Id. |
| | 18 | 889 | 46·8 | 44·3 | 2·5 | 0·3 | 0·1 | 21 | | 10·0 | Light rain. |
| | 19 | 878 | 48·0 | 45·5 | 2·5 | 0·7 | 0·3 | 22 | | 9·7 | Thick scud. |
| | 20 | 881 | 48·9 | 46·0 | 2·9 | 0·5 | 0·2 | 22 | 24 : — : — | 9·0 | Scud; cirrous clouds, slightly tinged with red. |
| | 21 | 893 | 49·0 | 46·6 | 2·4 | 0·5 | 0·4 | 23 | 24 : — : — | 10·0 | Id.; a few drops of rain. |
| | 22 | 882 | 49·2 | 46·9 | 2·3 | 0·5 | 0·2 | 23 | 25 : — : — | 10·0 | Thin loose scud very low; thick cirrous clouds on hor. |
| | 23 | 884 | 49·9 | 46·5 | 3·4 | 0·4 | 0·4 | 22 | 26 : 28 : — | 10·0 | Loose scud to W.; thick cirro-stratus. |
| 27 | 0 | 868 | 49·9 | 47·0 | 2·9 | 0·7 | 0·4 | 22 | | 10·0 | Dense mass of cirro-strati; scud on SW. horizon. |
| | 1 | 869 | 50·1 | 46·9 | 3·2 | 0·6 | 0·3 | 24 | | 10·0 | Id.; patches of scud to W. |
| | 2 | 870 | 49·9 | 46·5 | 3·4 | 0·4 | 0·1 | 24 | 26 : — : — | 10·0 | Id.; scud. [SSE; scud. |
| | 3 | 856 | 50·0 | 46·1 | 3·9 | 0·3 | 0·4 | 24 | 26 : — : — | 10·0 | Dense cirro-strati, having a radiated appearance from |
| | 4 | 851 | 48·9 | 45·5 | 3·4 | 0·5 | 0·3 | 22 | 26 : — : — | 10·0 | Patches of ragged scud; dense homogeneous cir.-str. |
| | 5 | 856 | 48·1 | 44·9 | 3·2 | 0·5 | 0·0 | | | 10·0 | Dense mass of cirro-strati and cirro-stratous-scud. |
| | 6 | 847 | 47·4 | 44·8 | 2·6 | 0·2 | 0·0 | 20 | | 10·0 | Thick semifluid cir.-str.-scud; drops of rain; breaking. |
| | 7 | 821 | 47·3 | 44·9 | 2·4 | 0·0 | 0·0 | | 26 : — : — | 9·7 | Scud, causing a slightly coloured lunar corona. |
| | 8 | 816 | 47·7 | 46·2 | 1·5 | 0·1 | 0·0 | 18 | | 10·0 | Id. |
| | 9 | 782 | 48·8 | 46·7 | 2·1 | 0·2 | 0·1 | 21 | | 10·0 | Id. |
| | 10 | 760 | 48·8 | 46·7 | 2·1 | 0·3 | 0·0 | 20 | — : 24 : — | 9·7 | Woolly cirro-cumuli; scud on horizon. |
| | 11 | 754 | 48·0 | 46·5 | 1·5 | 0·2 | 0·0 | 20 | | 10·0 | Cirrous clouds. |
| | 12 | 714 | 47·9 | 46·4 | 1·5 | 0·5 | 0·1 | 18 | | 10·0 | Id. |
| 28 | 0 | 29·456 | ... | ... | ... | 4·8 | ... | 23 | | | |
| | 13 | 29·575 | 37·9 | 35·6 | 2·3 | 3·7 | 0·3 | 25 | | 2·0 | Thin woolly cirri; lunar corona. |
| | 14 | 595 | 38·3 | 36·0 | 2·3 | 0·6 | 0·3 | 24 | | 3·0 | Id. |
| | 15 | 601 | 37·5 | 35·2 | 2·3 | 0·2 | 0·0 | | | 0·0 | Quite clear. |
| | 16 | 607 | 36·0 | 34·4 | 1·6 | 0·2 | 0·1 | 25 | | 0·2 | Cirro-strati to NW.; haze on E. horizon. |
| | 17 | 610 | 35·6 | 34·5 | 1·1 | 0·1 | 0·0 | | | 6·0 | Thin scud or cirrous clouds. |
| | 18 | 611 | 33·6 | 32·9 | 0·7 | 0·1 | 0·0 | | | 1·0 | Thin clouds. |
| | 19 | 621 | 35·4 | 34·3 | 1·1 | 0·0 | 0·0 | | | 6·0 | Id. |
| | 20 | 607 | 38·6 | 36·6 | 2·0 | 0·1 | 0·1 | 17 | 26 : — : — | 10·0 | Thin scud; cirro-strati to E., tinged with red. |
| | 21 | 601 | 38·8 | 37·1 | 1·7 | 0·3 | 0·3 | 19 | | 10·0 | Dense homogeneous mass; drops of rain. |
| | 22 | 574 | 39·1 | 38·7 | 0·4 | 0·3 | 0·2 | 19 | 22 : — : — | 10·0 | Dense cirro-strati; scud; light showers. |
| | 23 | 531 | 39·9 | 39·2 | 0·7 | 0·1 | 0·2 | 19 | 22 : — : — | 10·0 | Scud. |
| 29 | 0 | 477 | 43·2 | 41·9 | 1·3 | 0·8 | 0·1 | 18 | 20 : — : — | 10·0 | Id. |
| | 1 | 389 | 44·2 | 43·1 | 1·1 | 1·1 | 1·5 | 18 | 20 : — : — | 10·0 | Id. |
| | 2 | 343 | 45·3 | 44·3 | 1·0 | 4·0 | 3·0 | 20 | 20 : — : — | 10·0 | Id.; occasional patches of sky; light rain. |
| | 3 | 285 | 46·1 | 45·8 | 0·3 | 3·6 | 3·8 | 20 | 20 : — : — | 10·0 | Id.; light rain. |
| | 4 | 238 | 47·0 | 46·0 | 1·0 | 3·4 | 1·2 | 19 | 20 : 23 : — | 9·8 | Two currents of scud; sky to E. |
| | 5 | 208 | 52·0 | 48·3 | 3·7 | 3·4 | 5·0 | 22 | 23 : 26 : 26 | 8·5 | Pat. of scud; cirro-cumulous-scud; varieties of cirri. |
| | 6 | 203 | 51·0 | 46·7 | 4·3 | 4·5 | 3·4 | 22 | 24 : — : 26 | 2·0 | Pat. of sc.; pat. of cir.; cir.-cum.; at 18h 7m haze and |
| | 7 | 193 | 50·6 | 46·7 | 3·9 | 3·4 | 5·5 | 24 | 24 : — : — | 9·0 | Loose scud; cir.-haze; coloured lun. cor. [lun. cor. |
| | 8 | 203 | 49·1 | 44·0 | 5·1 | 5·7 | 2·6 | 23 | | 0·1 | Patches of scud. |
| | 9 | 203 | 47·6 | 42·3 | 5·3 | 4·2 | 3·6 | 24 | | 0·1 | Id. |
| | 10 | 197 | 48·0 | 43·0 | 5·0 | 5·2 | 3·9 | 24 | 24 : — : — | 5·0 | Scud. |
| | 11 | 183 | 47·4 | 43·0 | 4·4 | 5·2 | 4·4 | 23 | 25 : — : — | 10·0 | Id. |
| | 12 | 183 | 46·9 | 42·0 | 4·9 | 5·5 | 4·0 | 24 | | 4·0 | Id. to S. and E. |
| | 13 | 29·177 | 46·7 | 41·6 | 5·1 | 5·7 | 3·9 | 26 | 25 : — : — | 2·0 | Scud; haze on horizon. |
| | 14 | 168 | 46·3 | 41·7 | 4·6 | 5·7 | 4·0 | 22 | 24 : — : — | 2·5 | Id.; a few drops of rain. |
| | 15 | 184 | 45·7 | 42·0 | 3·7 | 4·4 | 3·9 | 24 | 24 : — : — | 3·5 | Id. |
| | 16 | 198 | 44·9 | 41·4 | 3·5 | 3·2 | 2·2 | 25 | 26 : — : — | 6·0 | Id; shower since last observation. |
| | 17 | 240 | 42·5 | 38·8 | 3·7 | 4·3 | 3·1 | 23 | | 4·0 | Thick scud to W. and N.; clear in zenith. |
| | 18 | 291 | 39·8 | 37·1 | 2·7 | 2·3 | 2·5 | 27 | | 4·0 | Id.; light rain. |

The direction of the wind is indicated by the number of the point of the compass, reckoning N. = 0, E. = 8, S. = 16, W. = 24. The motions of the three strata of clouds, Sc. (scud), C.-s. (cirro-stratus), and Cir. (cirrus), are indicated in a similar manner.

| Gött. Mean Time. | | Barometer at 32°. | Thermometers. Dry. | Wet. | Diff. | Wind. Maximum force in 1h. | 10m. | From | Clouds, Sc. : C.-s. : Ci., moving from | Sky clouded. | Species of Clouds and Meteorological Remarks. |
|---|---|---|---|---|---|---|---|---|---|---|---|
| d. | h. | in. | ° | ° | ° | lbs. | lbs. | pt. | pt. pt. pt. | 0—10. | |
| 29 | 19 | 29·299 | 38·3 | 36·1 | 2·2 | 1·5 | 2·1 | 24 | | 1·5 | Heavy clouds on horizon, shower after this. |
| | 20 | 314 | 36·4 | 35·2 | 1·2 | 3·1 | 0·5 | 22 | | 2·0 | Mass of scud on Cheviot, scud in W., S., and E. |
| | 21 | 328 | 38·9 | 36·5 | 2·4 | 1·6 | 1·0 | 22 | | 2·0 | Loose scud ; mass of scud with cirrous top. |
| | 22 | 350 | 36·0 | 35·4 | 0.6 | 1·9 | 0·6 | 22 | | 3·0 | Thin watery scud ; denser scud to S. and SE. ; rainbow. |
| | 23 | 357 | 38·8 | 36·6 | 2·2 | 2·3 | 2·0 | 24 | | 0·2 | Scud. |
| 30 | 0 | 363 | 40·3 | 37·2 | 3·1 | 2·4 | 2·0 | 25 | 26 : — : — | 0·2 | Loose scud. |
| | 1 | 362 | 42·6 | 38·0 | 4·6 | 1·7 | 2·3 | 24 | 25 : — : — | 3·0 | Id. |
| | 2 | 357 | 40·8 | 37·0 | 3·8 | 4·5 | 3·6 | 24 | 26 : — : — | 2·5 | Id. ; passing showers. |
| | 3 | 325 | 40·0 | 37·1 | 2·9 | 3·7 | 2·1 | 25 | — : — : 26 | 8·0 | Woolly and linear cirri ; thin scud ; loose cumuli to [N. and S. |
| | 4 | 319 | 38·9 | 35·7 | 3·2 | 1·8 | 0·4 | 24 | — : — : 25 | 7·5 | Woolly cirri ; thick to SW. |
| | 5 | 308 | 37·0 | 35·0 | 2·0 | 0·9 | 0·0 | 16 | 26 : — : 24 | 8·0 | Scud ; woolly and diffuse cirri. |
| | 6 | 277 | 35·8 | 34·3 | 1·5 | 0·9 | 0·0 | | — : — : 24 | 10·0 | Diffuse cirri ; scud. |
| | 7 | 272 | 36·2 | 34·0 | 2·2 | 0·0 | 0·0 | | | 10·0 | Thin scud. |
| | 8 | 293 | 38·2 | 34·9 | 3·3 | 0·5 | 0·6 | 24 | | 10·0 | Scud. |
| | 9 | 285 | 35·2 | 33·1 | 2·1 | 0·9 | 0·1 | 22 | | 2·5 | Patches of thin scud ; haze on horizon. |
| | 10 | 286 | 34·8 | 33·6 | 1·2 | 2·1 | 0·4 | 24 | | 9·7 | Scud ; sky to N. |
| | 11 | 314 | 33·7 | 32·1 | 1·6 | 1·6 | 0·2 | 24 | 25 : 25 : 25 | 4·0 | Patches of scud ; cirro-cumulous-scud ; cirri. |
| | 12 | 302 | 34·2 | 32·1 | 2·1 | 1·7 | 1·0 | 25 | — : — : 25 | 6·5 | Woolly cirri. |
| | 13 | 29·328 | 33·8 | 31·7 | 2·1 | 3·3 | 1·1 | 26 | — : — : 25 | 6·5 | Woolly cirri ; lunar halo. |
| | 14 | 336 | 33·0 | 31·4 | 1·6 | 1·6 | 0·6 | 26 | — : — : 25 | 6·0 | Id. |
| | 15 | 334 | 33·3 | 32·3 | 1·0 | 1·1 | 1·6 | 25 | 28 : — : — | 6·0 | Scud ; cirri ; a few flakes of snow. |
| | 16 | 346 | 32·8 | 32·1 | 0·7 | 1·4 | 1·2 | 24 | 27 : — : — | 6·0 | Id. ; id. |
| | 17 | 364 | 32·0 | 31·5 | 0·5 | 1·5 | 0·9 | 25 | | 3·0 | Id. ; id. |
| | 18 | 363 | 32·0 | 31·6 | 0·4 | 1·6 | 0·3 | 25 | | 2·0 | Id. ; id. |
| | 19 | 359 | 32·0 | 31·7 | 0·3 | 1·2 | 0·6 | 24 | | 6·0 | Id. ; id. |
| | 20 | 377 | 31·2 | 30·7 | 0·5 | 0·7 | 0·4 | 23 | — : 27 : — | 5·0 | Cir.-cum.-scud ; cum.-str., nimbi, cumuli on E. hor. |
| | 21 | 405 | 31·9 | 31·5 ? | 0·4 | 1·6 | 1·2 | 28 | 28 : — : — | 7·0 | Scud ; cirro-cumuli ; snow after this. |
| | 22 | 423 | 31·5 | 31·4 ? | 0·1 | 4·1 | 1·6 | 28 | | 2·0 | Thick scud to SE. ; cirro-cumuli to NE. |
| | 23 | 461 | 32·3 | 32·1 ? | 0·2 | 2·3 | 0·7 | 27 | | 1·5 | Cumulo-strati to E. and NE. |
| 31 | 0 | 473 | 33·3 | 31·4 | 1·9 | 1·2 | 1·2 | 28 | | 0·2 | Cumulo-strati on NE. and E. horizon ; scud to SW. |
| | 1 | 483 | 34·4 | 30·3 | 4·1 | 1·9 | 1·1 | 28 | | 4·0 | Scud and loose cumuli ; cumuli to E. |
| | 2 | 499 | 33·5 | 31·3 | 2·2 | 2·2 | 1·9 | 28 | 28 : 28 : — | 6·0 | Id. ; cir.-cum.-str. ; cum.-st. to E. ; snow lately. |
| | 3 | 518 | 32·4 | 29·9 | 2·5 | 1·6 | 1·3 | 28 | 28 : — : — | 3·0 | Masses of scud ; cumuli on E. horizon. |
| | 4 | 528 | 31·8 | 30·2 | 1·6 | 1·4 | 1·9 | 28 | | 2·0 | Patches of scud ; loose cumuli to S. ; cum.-str. to E. |
| | 5 | 549 | 30·7 | 28·0 | 2·7 | 1·6 | 0·5 | | | 1·5 | Id. ; cumulo-strati on E. horizon. |
| | 6 | 557 | 28·6 | 26·2 | 2·4 | 0·7 | 0·4 | 28 | | 0·2 | Cum. on E. hor. ; tinge of red to SW. ; sky very clear. |
| | 7 | 574 | 28·5 | 25·9 | 2·6 | 0·4 | 0·3 | 28 | | 0·1 | Patch of clouds to E. |
| | 8 | 601 | 28·2 | 25·9 | 2·3 | 0·4 | 0·3 | 28 | — : 28 : — | 1·0 | Cirro-cumulous-scud ; cirrous-haze on horizon. |
| | 9 | 613 | 28·9 | 26·3 | 2·6 | 0·5 | 0·5 | 28 | | 6·5 | The same ; lunar corona. |
| | 10 | 623 | 29·2 | 27·1 | 2·1 | 0·6 | 0·6 | 29 | — : 30 : — | 6·5 | Cirro-cumulous-scud. |
| | 11 | 636 | 28·6 | 26·0 | 2·6 | 0·4 | 0·4 | 28 | | 1·0 | Id. and cirro-strati to S. |
| | 12 | 651 | 27·2 | 25·6 | 1·6 | 0·4 | 0·2 | 28 | | 0·1 | Cirro-strati on E. horizon. |
| | 13 | 29·669 | 27·7 | 25·1 | 2·6 | 0·2 | 0·1 | 28 | — : 30 : — | 9·0 | Cirro-cumulous-scud. |
| | 14 | 678 | 31·0 | 27·4 | 3·6 | 0·4 | 0·5 | 28 | 0 : — : — | 10·0 | Scud. |
| | 15 | 690 | 30·6 | 27·9 | 2·7 | 0·4 | 0·0 | | 30 : — : — | 9·5 | Id. |
| | 16 | 710 | 29·9 | 27·0 | 2·9 | 0·4 | 0·3 | 28 | 30 : — : — | 2·5 | Id., loose cumuli. |
| | 17 | 732 | 30·1 | 27·3 | 2·8 | 0·5 | 0·0 | | | 0·1 | Cirro-strati to SE. |
| | 18 | 745 | 28·0 | 26·0 | 2·0 | 0·2 | 0·0 | | | 0·1 | Id. |
| | 19 | 756 | 28·3 | 26·3 | 2·0 | 0·2 | 0·1 | 28 | | 1·0 | Scud, &c. to S. |
| | 20 | 787 | 28·0 | 25·9 | 2·1 | 0·1 | 0·0 | | 2 : — : — | 2·0 | Loose scud to SE. |
| | 21 | 813 | 26·3 | 25·2 | 1·1 | 0·0 | 0·0 | 16 | 2 : — : — | 0·5 | Scud ; tops of cumuli seen above scud to E. |
| | 22 | 834 | 29·0 | 27·0 | 2·0 | 0·0 | 0·0 | 26 | 2 : — : — | 1·7 | Cirro-cumulous-scud to E. |
| | 23 | 841 | 31·0 | 29·3 | 1·7 | 0·0 | 0·0 | 20 | 2 : — : 30 | 1·0 | Id. ; streaks of cirri. |
| 1 | 0 | 833 | 34·2 | 31·0 | 3·2 | 0·0 | 0·0 | 30 | | 2·0 | Id. to NE. ; thin cirri. |
| | 1 | 826 | 36·3 | 32·0 | 4·3 | 0·0 | 0·0 | 25 | | 2·5 | Id. to S. and E. ; lin. cir. and cir.-haze. |
| | 2 | 813 | 37·3 | 33·1 | 4·2 | 0·0 | 0·0 | 18 | — : — : 30 | 7·0 | Thin linear cirri ; cir.-cum.-scud ; part of sol. halo. |

The direction of the wind is indicated by the number of the point of the compass, reckoning N. = 0, E. = 8, S. = 16, W. = 24. The motions of the three strata of clouds, Sc. (scud), C.-s. (cirro-stratus), and Cir. (cirrus), are indicated in a similar manner.

Jan. 30d 14h 59m 20s. A meteor shot from between Castor and Pollux.

Jan. 30d 18h 8m. A flash of lightning seen above S by E. point of horizon ; it seemed to be in a space between the horizon and a stratum of rather thick cirrous clouds, which are about 8° above the horizon ; a brighter flash seen in a few minutes ; no thunder heard.

| Gött. Mean Time. | | Barometer at 32°. | Thermometers. Dry. | Wet. | Diff. | Wind. Maximum force in 1h. | 10m. | From | Clouds, Sc. : C.-s. : Ci., moving from | Sky clouded. | Species of Clouds and Meteorological Remarks. |
|---|---|---|---|---|---|---|---|---|---|---|---|
| d. | h. | in. | ° | ° | ° | lbs. | lbs. | pt. | pt. pt. pt. | 0—10. | |
| 1 | 3 | 29·788 | 36·4 | 33·2 | 3·2 | 0·0 | 0·0 | 18 | — : — : 30 | 5·0 | Thin linear cirri. |
| | 4 | 773 | 34·1 | 31·9 | 2·2 | 0·0 | 0·0 | 18 | — : 30 : — | 5·0 | Smoky scud on Cheviot; fine cirri; cir.-cum. of different sizes. |
| | 5 | 752 | 32·9 | 31·2 | 1·7 | 0·1 | 0·0 | 18 | — : 30 : — | 8·5 | Cir.-cum.-str. rad. from N by W. to S by E.; fine cirri, cir.-haze. |
| | 6 | 732 | 29·0 | ... | ... | 0·0 | 0·0 | | | 8·0 | As before; orange and purple-edged lunar corona. |
| | 7 | 683 | 27·0 | 27·1 | ... | 0·0 | 0·0 | | | 1·0 | Thin cirrous clouds; coloured lunar corona. |
| | 8 | 675 | 28·0 | 27·6 | 0·4 | 0·0 | 0·0 | | — : 28 : — | 9·5 | Cir.-cum.-str., lately small cir.-cum.; lunar corona. |
| | 9 | 626 | 27·3 | 26·8 | 0·5 | 0·0 | 0·0 | | — : 26 : — | 9·0 | Id.; coloured lunar corona. |
| | 10 | 586 | 25·7 | 25·1 | 0·6 | 0·0 | 0·0 | | | 9·0 | Thin cirrous clouds and haze; lunar halo. |
| | 11 | 549 | 26·6 | 26·1 | 0·5 | 0·0 | 0·0 | | | 10·0 | Id.; id. |
| | 12 | 521 | 28·2 | 27·5 | 0·7 | 0·0 | 0·0 | 20 | | 10·0 | Id.; id. |
| | 13 | 29·486 | 28·9 | 27·9 | 1·0 | 0·0 | 0·0 | 15 | | 10·0 | Thin cirrous clouds and haze; halo gone. |
| | 14 | 443 | 29·7 | 28·3 | 1·4 | 0·0 | 0·0 | 16 | | 10·0 | Moon quite obscured. |
| | 15 | 398 | 29·9 | 29·2 | 0·7 | 0·0 | 0·0 | 22 | | 10·0 | Snowing. |
| | 16 | 357 | 30·3 | 29·8 | 0·5 | 0·0 | 0·0 | | | 10·0 | Heavy snow. |
| | 17 | 326 | 30·2 | 29·9 | 0·3 | 0·0 | 0·0 | | | 10·0 | Id. |
| | 18 | 305 | 30·2 | 30·0 | 0·2 | 0·0 | 0·0 | | | 10·0 | Id. |
| | 19 | 287 | 29·0 | 29·0 | ... | 0·0 | 0·0 | | | 10·0 | Id. |
| | 20 | 281 | 29·0 | 29·0 | ... | 0·0 | 0·0 | | | 10·0 | Id. |
| | 21 | 287 | 30·1 | 30·0 | 0·1 | 0·0 | 0·0 | | | 10·0 | Moderate snow. |
| | 22 | 297 | 30·0 | 29·8 | 0·2 | 0·2 | 0·2 | 4 | | 10·0 | Id. |
| | 23 | 315 | 31·7 | 31·0 | 0·7 | 0·2 | 0·0 | 4 | | 10·0 | Id. |
| 2 | 0 | 325 | 33·0 | 31·8 | 1·2 | 0·0 | 0·0 | | | 10·0 | Light Snow. |
| | 1 | 336 | 33·6 | 32·6 | 1·0 | 0·0 | 0·0 | | | 10·0 | Id. |
| | 2 | 346 | 34·8 | 34·0 | 0·8 | 0·0 | 0·0 | | | 10·0 | Snow ceased; snow 2¾ inches deep. |
| | 3 | 363 | 35·8 | 34·6 | 1·2 | 0·0 | 0·0 | 3 | 3 : — : — | 10·0 | Patches of scud; dense uniform cirro-strati. |
| | 4 | 390 | 34·1 | 33·8 | 0·3 | 0·2 | 0·1 | | | 10·0 | Snowing a little. |
| | 5 | 429 | 34·0 | 33·5 | 0·5 | 0·3 | 0·2 | 3 | | 10·0 | Id. |
| | 6 | 475 | 33·2 | 32·9 | 0·3 | 0·6 | 0·4 | 2 | | 10·0 | Id. |
| | 7 | 533 | 33·4 | 33·1 | 0·3 | 0·1 | 0·4 | 3 | | 10·0 | Id. |
| | 8 | 587 | 33·2 | 32·9 | 0·3 | 0·0 | 0·0 | 2 | | 10·0 | Id. |
| | 9 | 629 | 33·2 | 32·9 | 0·3 | 0·0 | 0·0 | 2 | | 10·0 | Fair. |
| | 10 | 664 | 32·8 | 32·4 | 0·4 | 0·0 | 0·0 | | | 10·0 | Scud. |
| | 11 | 697 | 32·8 | 32·4 | 0·4 | 0·0 | 0·0 | | | 0·0? | Very thin haze; lunar halo, inner radius 21¼°. |
| | 12 | 730 | 31·0 | 32·0 | ... | 0·0 | 0·0 | | | 3·0 | Scud to N.; fine cirri; lunar halo. |
| | 13 | 29·752 | 30·8 | 31·0 | ... | 0·0 | 0·0 | | 2 : — : — | 5·0 | Scud. |
| | 14 | 770 | 31·0 | 30·9 | 0·1 | 0·0 | 0·0 | | 2 : — : — | 9·8 | Id. |
| | 15 | 782 | 33·0 | 32·1 | 0·9 | 0·1 | 0·0 | 30 | 2 : — : — | 3·0 | Id. |
| | 16 | 792 | 31·3 | 31·0 | 0·3 | 0·2 | 0·1 | 30 | — : 31 : — | 1·2 | Cirro-cumulous-scud; scud to S. |
| | 17 | 804 | 31·7 | 31·1 | 0·6 | 0·3 | 0·1 | 29 | | 1·5 | Cirri to S.; cirrous-haze on N. horizon. |
| | 18 | 820 | 31·0 | 30·4 | 0·6 | 0·1 | 0·1 | 28 | — : 0 : — | 8·0 | Cirro-cumulous-scud. |
| | 19 | 821 | 34·1 | 32·3 | 1·8 | 0·3 | 0·1 | 28 | | 9·9 | Scud. |
| | 20 | 824 | 33·5 | 32·1 | 1·4 | 0·3 | 0·4 | 28 | — : 0 : — | 5·0 | Cirrous clouds. |
| | 21 | 837 | 32·8 | 32·5 | 0·3 | 0·3 | 0·4 | 28 | 31 : — : — | 9·5 | Thin scud; cir.-cum.-str.; thick scud on horizon. |
| | 22 | 837 | 36·3 | 34·8 | 1·5 | 0·4 | 0·2 | 30 | — : 30 : — | 9·9 | Loose cir.-cum.-str.; ragged scud and cumuli on hor. |
| | 23 | 859 | 36·5 | 34·4 | 2·1 | 0·2 | 0·3 | 29 | 1 : — : 30 | 6·5 | Scud; cir.-cum.-str. to E.; woolly and curled cirri. |
| 3 | 0 | 869 | 35·7 | 33·8 | 1·9 | 0·2 | 0·2 | 30 | | 2·5 | Cirri-cumulous-scud; cirri; cirro-stratus. |
| | 1 | 862 | 36·4 | 33·8 | 2·6 | 0·3 | 0·2 | 30 | — : 1 : — | 5·0 | Woolly cirri, and loose cirro-cumuli; cum.-str. to E. |
| | 2 | 858 | 36·2 | 33·5 | 2·7 | 0·2 | 0·2 | 28 | — : — : 0 | 7·0 | Lin. and wo. cir. lying NW. to SE.; cum.-str. to E.; cir.-str. to S. |
| | 3 | 851 | 34·9 | 32·6 | 2·3 | 0·3 | 0·0 | 28 | | 1·5 | Linear cirri; cumulo-strati to E. |
| | 4 | 837 | 33·8 | 32·2 | 1·6 | 0·0 | 0·0 | 28 | | 1·0 | A line of undul., retic., and woolly cirri lying N by E. to S by W. |
| | 5 | 841 | 32·7 | 30·9 | 1·8 | 0·0 | 0·0 | 29 | | 1·0 | As before; cumulo-strati to NE.; cirro-strati to S. |
| | 6 | 817 | 28·8 | 28·0 | 0·8 | 0·0 | 0·0 | 24 | | 0·2 | Fine cirri and cirrous-haze near horizon. |
| | 7 | 806 | 25·0 | 26·0 | ... | 0·0 | 0·0 | | | 0·2 | Id. |
| | 8 | 877 | 23·1 | 23·2 | ... | 0·0 | 0·0 | | | 1·5 | Very thin cirri over the sky; lunar corona and halo. |
| | 9 | 760 | 23·1 | 23·0 | 0·1 | 0·0 | 0·0 | | | 7·0 | Id.; id. |
| | 10 | 739 | 24·8 | 23·7 | 1·1 | 0·0 | 0·0 | | | 8·0 | As before; rad. of halo 22¼°; coloured corona at 15m. |

The direction of the wind is indicated by the number of the point of the compass, reckoning N. = 0, E. = 8, S. = 16, W. = 24. The motions of the three strata of clouds, Sc. (scud), C.-s. (cirro-stratus), and Cir. (cirrus), are indicated in a similar manner.

Feb. 1d 22h. The vane of the anemometer was found to be frozen up; the ice was removed.

| Gött. Mean Time. | Barometer at 32°. | Thermometers. Dry. | Wet. | Diff. | Wind. Maximum force in 1h. | 10m. | From | Clouds, Sc. : C.-s. : Ci., moving from | Sky clouded. | Species of Clouds and Meteorological Remarks. |
|---|---|---|---|---|---|---|---|---|---|---|
| d. h. | in. | ° | ° | ° | lbs. | lbs. | pt. | pt. pt. pt. | 0—10. | |
| 3 11 | 29·709 | 23·6 | 23·3 | 0·3 | 0·0 | 0·0 | | | 10·0 | Cir.-cum. at 10h 30m, now homogen.; cir.-haze; faint |
| 12 | 670 | 24·9 | 23·9 | 1·0 | 0·0 | 0·0 | | | 10·0 | Thick cir.-str. and haze; Moon nearly obscured. [halo. |
| 4 0½ | 29·334 | ... | ... | ... | ... | ... | | | ... | Nearly 4 inches of snow has fallen during the night; |
| 3 | 316 | ... | ... | ... | ... | ... | | | ... | the total depth now is 5¾ inches. |
| 13 | 29·267 | 28·2 | 28·0 | 0·2 | 0·0 | 0·0 | | | 2·0 | Cirro-cumulo-strati. |
| 14 | 255 | 24·0 | 23·3 | 0·7 | 0·0 | 0·0 | | — : 31 : — | 3·5 | Thin cirro-cumulous-scud; woolly cirro-cumuli to S. |
| 15 | 240 | 22·6 | 21·9 | 0·7 | 0·0 | 0·0 | | — : — : 0 | 4·0 | Woolly cirri; cirro-cumulo-strati to W.; lunar corona. |
| 16 | 232 | 24·6 | 24·3 | 0·3 | 0·0 | 0·0 | | — : — : 1 | 10·0 | Id.; cir.-cum.-str., cir.-haze; lunar corona. |
| 17 | 223 | 25·0 | 24·7 | 0·3 | 0·0 | 0·0 | | | 10·0 | Scud. |
| 18 | 216 | 24·4 | 24·2 | 0·2 | 0·0 | 0·0 | | | 8·0 | Cirri lying NW. to SE.; cirro-cumuli; cirrous-haze. |
| 19 | 205 | 23·2 | 23·4 | ... | 0·0 | 0·0 | | | 10·0 | Scud, heavy clouds to E.; cirrous-haze to E. |
| 20 | 204 | 22·4 | 22·6 | ... | 0·0 | 0·0 | | — : 2 : — | 7·0 | Cirro-cumulo-strati; masses of scud about horizon. |
| 21 | 220 | 25·9 | 25·7 | 0·2 | 0·0 | 0·0 | | — : 30 : — | 8·0 | Cirro-cumulous-scud. |
| 22 | 221 | 27·7 | 27·6 | 0·1 | 0·0 | 0·0 | | — : 30 : 30 | 9·0 | Cirri and cir.-cum.-str.; cirro-strati; cirrous-haze. |
| 23 | 225 | 28·0 | 27·0 | 1·0 | 0·0 | 0·0 | | | 9·5 | Id.; id.; id. |
| 5 0 | 229 | 31·4 | 30·0 | 1·4 | 0·0 | 0·0 | | — : — : 28 | 9·5 | Linear cirri and cirrous-haze; cirro-cumuli. |
| 1 | 231 | 32·9 | 31·8 | 1·1 | 0·0 | 0·0 | | — : 24 : 0 | 4·0 | Cirro-cumulo-strati; woolly cirri; haze on horizon. |
| 2 | 231 | 34·0 | 31·3 | 2·7 | 0·0 | 0·0 | | | 0·5 | Patches of cirri; cirro-strati and cirrous-haze on hor. |
| 3 | 233 | 35·8 | 32·5 | 3·3 | 0·0 | 0·0 | | — : — : 30 | 1·5 | Linear, reticulated, and mottled cirri; cir.-str. on hor. |
| 4 | 238 | 34·9 | 32·2 | 2·7 | 0·0 | 0·0 | | — : 26 : — | 2·0 | Patches of cirri; cir.-cum.-str.; cirro-strati on hor. |
| 5 | 241 | 30·5 | ... | ... | 0·0 | 0·0 | 17 | — : 30 : — | 6·0 | Cir.-cum.-str. radiating from NNW.; cir.-haze. |
| 6 | 234 | 29·3 | 28·3 | 1·0 | 0·0 | 0·0 | 26 | | 10·0 | Id. id. N by W.; id.; cirri. |
| 7 | 240 | 26·3 | 26·0 | 0·3 | 0·0 | 0·0 | | | 10·0 | |
| 8 | 238 | 25·5 | 25·0 | 0·5 | 0·0 | 0·0 | | | 7·0 | Linear cirri and cirrous-haze. |
| 9 | 243 | 23·6 | ... | ... | 0·0 | 0·0 | | | 7·0 | Linear cirri radiating from NNW. |
| 10 | 251 | 21·8 | 22·0 | ... | 0·0 | 0·0 | | | 4·0 | Woolly cirri and cirrous-haze. |
| 11 | 254 | 20·0 | 20·3 | ... | 0·0 | 0·0 | | | 5·0 | Cirri; very faint lunar halo. [the Moon. |
| 12 | 265 | 22·0 | 22·8 | ... | 0·0 | 0·0 | | — : 24 : — | 4·0 | Cir.-cum.-scud; coloured corona when clouds pass over |
| 13 | 29·269 | 21·1 | 21·2 | ... | 0·0 | 0·0 | | | 7·0 | Cirro-cumulous-scud. |
| 14 | 265 | 22·0 | 21·9 | 0·1 | 0·0 | 0·0 | | — : 30 : — | 2·0 | Id. |
| 15 | 277 | 19·8 | 20·0 | ... | 0·0 | 0·0 | | — : 30 : — | 2·0 | Id. |
| 16 | 273 | 18·7 | 19·8 | ... | 0·0 | 0·0 | | | 0·7 | Id. |
| 17 | 275 | 16·5 | 17·0 | ... | 0·0 | 0·0 | | | 0·0 | Clear. |
| 18 | 279 | 18·9 | 19·9 | ... | 0·0 | 0·0 | | | 0·0 | Id. |
| 19 | 276 | 15·2 | 16·0 | ... | 0·0 | 0·0 | | | 0·2 | Sheet of cirri on E. horizon. |
| 20 | 277 | 16·3 | 17·0 | ... | 0·0 | 0·0 | | | 0·2 | Cirri and cumuli on E. horizon. |
| 21 | 281 | 16·6 | 16·7 | ... | 0·0 | 0·0 | | | 1·0 | Cirro-strati; cirro-cumulo-strati; cirrous-haze. |
| 22 | 287 | 18·9 | 18·9 | ... | 0·0 | 0·0 | | | 0·5 | Woolly cirro-cumuli to W.; hazy on horizon. |
| 23 | 286 | 21·7 | 21·2 | 0·5 | 0·0 | 0·0 | | | 0·2 | Loose cumuli to E. |
| 6 0 | 281 | 25·1 | 24·3 | 0·8 | 0·0 | 0·0 | | | 0·3 | Id. to S. and SE. |
| 1 | 259 | 30·4 | 29·1 | 1·3 | 0·0 | 0·0 | 20 | | 0·2 | Id. |
| 2 | 244 | 35·1 | 33·0 | 2·1 | 0·0 | 0·0 | 22 | | 0·2 | Id. |
| 3 | 240 | 35·3 | 33·2 | 2·1 | 0·0 | 0·0 | 22 | | 0·2 | Cirro-strati to SW. and SE. |
| 4 | 222 | 35·1 | 32·8 | 2·3 | 0·0 | 0·0 | | | 0·3 | Cumulo-strati, cirro-strati, patches of scud. |
| 5 | 215 | 30·3 | ... | ... | 0·0 | 0·0 | 15 | | 0·5 | Woolly cirri to W.; scud on Cheviot. |
| 6 | 203 | 26·4 | 27·8 | ... | 0·0 | 0·0 | | — : 29 : — | 8·0 | Woolly cirri and cir.-cum.-str.; bluish-black haze to E. |
| 7 | 194 | 25·2 | 25·1 | 0·1 | 0·0 | 0·0 | | — : 29 : — | 9·0 | Id. |
| 8 | 190 | 25·8 | 25·1 | 0·7 | 0·0 | 0·0 | | | 9·0 | Id.; stars dim. |
| 9 | 182 | 25·7 | 25·6 | 0·1 | 0·0 | 0·0 | | | 10·0 | Dark; a few stars dimly visible. |
| 10 | 161 | 24·1 | 24·2 | ... | 0·0 | 0·0 | | — : 28 : — | 9·0 | Cirro-cumulo-strati. |
| 11 | 141 | 24·2 | 23·9 | 0·3 | 0·0 | 0·0 | 18 | | 10·0 | Cirro-cumuli; cirrous clouds and haze. |
| 12 | 126 | 25·7 | 25·5 | 0·2 | 0·0 | 0·0 | | — : 24 : — | 9·8 | Cirro-cumulous-scud, loose cirro-cumuli. |
| 13 | 29·098 | 23·9 | ... | ... | 0·0 | 0·0 | | — : 22 : — | 9·7 | Cirro-cumulous-scud, loose cirro-cumuli. |
| 14 | 061 | 24·7 | 24·3 | 0·4 | 0·0 | 0·0 | | | 10·0 | Id. id., getting thicker. |
| 15 | 020 | 25·0 | 24·9 | 0·1 | 0·0 | 0·0 | | | 10·0 | Densely overcast. |

The direction of the wind is indicated by the number of the point of the compass, reckoning N. = 0, E. = 8, S. = 16, W. = 24. The motions of the three strata of clouds, Sc. (scud), C.-s. (cirro-stratus), and Cir. (cirrus), are indicated in a similar manner.

| Gött. Mean Time. | Barometer at 32°. | Thermometers. Dry. | Wet. | Diff. | Wind. Maximum force in 1h. | 10m. | From | Clouds, Sc. : C.-s. : Cl., moving from | Sky clouded. | Species of Clouds and Meteorological Remarks. |
|---|---|---|---|---|---|---|---|---|---|---|
| d. h. | in. | ° | ° | ° | lbs. | lbs. | pt. | pt. pt. pt. | 0—10. | |
| 6 16 | 28·974 | 26·4 | 26·0 | 0·4 | 0·0 | 0·0 | | | 10·0 | Densely overcast; a few flakes of snow. |
| 17 | 918 | 27·4 | 27·3 | 0·1 | 0·0 | 0·0 | | | 10·0 | Id.; id. |
| 18 | 855 | 32·9 | 32·3 | 0·6 | 0·2 | 0·2 | 19 | | 10·0 | Id.; slight fall of snow. |
| 19 | 815 | 33·9 | 32·9 | 1·0 | 0·5 | 0·1 | 16 | | 10·0 | Id.; id. sleet. |
| 20 | 785 | 34·4 | 33·8 | 0·6 | 0·8 | 0·0 | 16 | 20 : — : — | 10·0 | Loose scud, nearly homogeneous. |
| 21 | 785 | 36·2 | 34·5 | 1·7 | 0·4 | 0·6 | 20 | — : 22 : — | 8·0 | Cirro-cumulous-scud; nimbus to N.; very black to S. |
| 22 | 794 | 38·0 | 36·7 | 1·3 | 0·9 | 0·1 | 20 | 23 : — : — | 8·0 | Scud and loose cumuli; nimbus; slight shower. |
| 23 | 790 | 38·9 | 34·9 | 4·0 | 2·0 | 1·6 | 20 | 24 : — : — | 2·0 | Loose cumuli; cirro-cumulous-scud. |
| 7 0 | 810 | 37·0 | 34·8 | 2·2 | 2·6 | 1·5 | 20 | 23 : — : — | 4·0 | Scud; id. |
| 1 | 805 | 38·1 | 35·0 | 3·1 | 0·8 | 0·3 | 20 | | 1·5 | Id.; id. |
| 2 | 796 | 37·2 | 34·3 | 2·9 | 0·9 | 0·7 | 20 | — : — : 23 | 6·0 | Woolly cirri; cumuli on Cheviot; shower to SSE. |
| 3 | 789 | 38·2 | 35·0 | 3·2 | 1·4 | 1·7 | 20 | — : — : 24 | 5·0 | Id.; passing showers of snow. |
| 4 | 784 | 33·2 | 32·7 | 0·5 | 1·4 | 0·8 | 20 | | 5·5 | Heavy shower of snow passed. |
| 5 | 776 | 33·0 | 32·7 | 0·3 | 0·8 | 0·4 | 20 | | 9·0 | |
| 6 | 772 | 30·7 | 30·5 | 0·2 | 0·8 | 0·2 | 21 | 24 : — : — | 2·0 | Loose scud. |
| 7 | 771 | 32·3 | 31·4 | 0·9 | 1·5 | 0·6 | 20 | | 6·0 | Id. |
| 8 | 767 | 30·9 | 30·0 | 0·9 | 0·4 | 0·1 | 20 | | 3·0 | Id. |
| 9 | 763 | 30·9 | 30·0 | 0·9 | 0·8 | 0·5 | 20 | | 0·5 | Id.; faint auroral light to NNW. |
| 10 | 755 | 29·7 | 29·1 | 0·6 | 0·6 | 0·2 | 20 | | 0·7 | Clouds to N.; stars bright. |
| 11 | 770 | 30·7 | 29·8 | 0·9 | 0·3 | 0·2 | 20 | | 7·0 | Thin scud; dense clouds to E.; a few flakes of snow. |
| 12 | 749 | 30·1 | 28·7 | 1·4 | 0·5 | 0·4 | 20 | | 1·5 | Id. id. |
| 13 | 28·747 | 29·9 | 29·3 | 0·6 | 0·3 | 0·1 | 19 | | 6·0 | Woolly cirri; dense clouds to SE. |
| 14 | 747 | 30·7 | 29·2 | 1·5 | 0·5 | 0·2 | 20 | | 3·0 | Patches of woolly cirri; scud to W. |
| 15 | 742 | 27·8 | 27·1 | 0·7 | 0·3 | 0·1 | 20 | — : — : 24 | 4·0 | Woolly cirri. |
| 16 | 751 | 30·3 | 29·0 | 1·3 | 0·3 | 0·5 | 20 | | 9·0 | Loose woolly cirri. |
| 17 | 740 | 29·9 | 29·2 | 0·7 | 0·4 | 0·2 | 20 | | 2·0 | Patches of loose woolly cirri; haze on horizon. |
| 18 | 732 | 31·4 | 30·9 | 0·5 | 0·3 | 0·2 | 22 | | 3·0 | Id. |
| 19 | 728 | 31·9 | 30·7 | 1·2 | 0·8 | 0·5 | 20 | | 3·0 | Woolly cirri to S.; dense clouds to SW. and SE. |
| 20 | 746 | 32·7 | 32·2 | 0·5 | 1·0 | 3·5 | 21 | | 10·0 | Heavy snow storm, ceased snowing at 20h 10m. |
| 21 | 762 | 32·6 | 31·6 | 1·0 | 1·0 | 0·5 | 21 | 24 : 26 : 26 | 3·0 | Loose scud; cirro-strati; curled cirri. |
| 22 | 763 | 33·1 | 32·0 | 1·1 | 0·8 | 0·5 | 19 | 20 : 24 : 30 | 5·5 | Scud, very low on Cheviot; cir.-cum.-scud; woolly cir. |
| 23 | 771 | 36·1 | 33·1 | 3·0 | 1·1 | 0·9 | | | 10·0 | Commenced to snow heavily. |
| 8 0 | 779 | 37·1 | 34·4 | 2·7 | 1·4 | 1·4 | 20 | — : 24 : — | 6·5 | Cir.-cum.-scud; woolly cirri, stationary; scud low on [Cheviot. |
| 1 | 778 | 36·4 | 34·9 | 1·5 | 2·0 | 1·2 | 20 | | 10·0 | Heavy shower of snow. |
| 2 | 781 | 38·0 | 35·1 | 2·9 | 2·0 | 0·8 | 20 | | 10·0 | Passing showers of snow from thin scud; cirri. |
| 3 | 775 | 37·0 | 34·7 | 2·3 | 2·3 | 1·5 | 20 | 24 : — : — | 8·0 | Loose scud; cirrous clouds; loose cumuli to S. |
| 4 | 779 | 34·7 | 33·6 | 1·1 | 1·7 | 1·6 | 20 | 23 : 24 : — | 4·0 | Id.; cir.-cum.-scud; cumuli on Cheviot. |
| 5 | 777 | 33·7 | 33·3 | 0·4 | 2·6 | 1·3 | 19 | 23 : — : — | 5·5 | Id.; woolly cirri; cir.-str.; showers of snow. |
| 6 | 761 | 33·3 | 32·9 | 0·4 | 1·3 | 1·2 | 19 | | 2·0 | Woolly cirri; thick scud to S. and W. |
| 7 | 768 | 33·9 | 32·9 | 1·0 | 1·4 | 1·2 | 20 | | 3·0 | Patches of scud to W.; dense clouds to NE. |
| 8 | 774 | 34·5 | 33·3 | 1·2 | 1·8 | 1·5 | 20 | | 5·0 | Scud on horizon. |
| 9 | 780 | 34·9 | 33·3 | 1·6 | 2·1 | 2·1 | 20 | | 7·0 | Id. |
| 10 | 770 | 35·4 | 34·0 | 1·4 | 2·7 | 2·6 | 19 | | 10·0 | Scud. |
| 11 | 757 | 35·0 | 33·0 | 2·0 | 3·1 | 1·8 | 20 | | 10·0 | Dark; a few stars occasionally visible. |
| 12 | 765 | 34·5 | 32·6 | 1·9 | 2·8 | 1·2 | 20 | | 8·5 | Scud and cirrous clouds. |
| 13 | 28·742 | 33·9 | 32·7 | 1·2 | 2·4 | 1·3 | 20 | 22 : — : — | 6·5 | Scud; cirrous clouds. |
| 14 | 724 | 33·3 | 33·2 | 0·1 | 1·8 | 1·4 | 20 | | 10·0 | Snow. |
| 15 | 719 | 33·9 | 33·5 | 0·4 | 2·5 | 1·4 | 20 | | 10·0 | Snow and sleet. |
| 16 | 716 | 34·0 | 33·8 | 0·2 | 1·8 | 0·9 | 20 | | 10·0 | Id. |
| 17 | 711 | 35·0 | 34·3 | 0·7 | 0·4 | 0·0 | | 24 : — : — | 9·0 | Scud; cirrous clouds. |
| 18 | 720 | 35·3 | 34·1 | 1·2 | 0·0 | 0·0 | | 24 : — : — | 10·0 | Id.; id. |
| 19 | 737 | 34·9 | 34·0 | 0·9 | 0·1 | 0·0 | | 24 : — : — | 10·0 | Id.; id. |
| 20 | 759 | 34·8 | 33·9 | 0·9 | 0·0 | 0·0 | 28 | 30 : — : — | 10·0 | Id.; blue cir.-str. to W.; very dark to SE.; drops [of rain. |
| 21 | 775 | 34·7 | 34·2 | 0·5 | 0·0 | 0·0 | 30 | 31 : — : — | 10·0 | Id.; slight snow since last observation. |
| 22 | 796 | 34·4 | 34·4 | ... | 0·2 | 0·2 | | | 10·0 | Snow 15m ago, now sleet. |
| 23 | 820 | 36·7 | 35·7 | 1·0 | 0·3 | 0·4 | 31 | 2 : — : — | 9·0 | Scud; shower of sleet. |

The direction of the wind is indicated by the number of the point of the compass, reckoning N. = 0, E. = 8, S. = 16, W. = 24. The motions of the three strata of clouds, Sc. (scud), C.-s. (cirro-stratus), and Cir. (cirrus), are indicated in a similar manner.

| Gött. Mean Time. | | Barometer at 32°. | Thermometers. Dry. | Wet. | Diff. | Wind. Maximum force in 1h. | 10m. | From | Clouds, Sc.: C.-s.: Ci., moving from | Sky clouded. | Species of Clouds and Meteorological Remarks. |
|---|---|---|---|---|---|---|---|---|---|---|---|
| d. | h. | in. | ° | ° | ° | lbs. | lbs. | pt. | pt. pt. pt. | 0—10. | |
| 9 | 0 | 28·842 | 36·9 | 35·7 | 1·2 | 0·9 | 0·5 | 31 | 2 : — : — | 9·0 | Scud. |
| | 1 | 878 | 37·2 | 36·8 | 0·4 | 0·9 | 0·2 | 1 | 2 : — : — | 9·5 | Id.; smart shower since 0h. |
| | 2 | 915 | 36·4 | 35·9 | 0·5 | 1·0 | 0·8 | 2 | 3 : — : — | 4·0 | Patches of thin scud; scud and loose cum.; showers. |
| | 3 | 956 | 38·2 | 36·2 | 2·0 | 1·1 | 0·8 | 2 | | 2·5 | Loose scud and cum.; snow disappearing rapidly. |
| | 4 | 28·993 | 38·2 | 36·3 | 1·9 | 0·9 | 0·4 | 31 | 2 : — : — | 8·0 | Scud; scud and loose cumuli; dense clouds to N. |
| | 5 | 29·030 | 37·1 | 35·7 | 1·4 | 0·8 | 1·1 | 31 | 2 : — : — | 10·0 | Id.; cumuli, cumulo-strati; shower of sleet. |
| | 6 | 055 | 36·2 | 35·2 | 1·0 | 1·7 | 0·5 | 1 | 1 : — : — | 10·0 | Id.; cumulo-strati on E. horizon. |
| | 7 | 107 | 35·7 | 35·1 | 0·6 | 2·5 | 1·6 | 2 | 1 : — : — | 10·0 | Id.; heavy shower of sleet. |
| | 8 | 147 | 35·0 | 34·5 | 0·5 | 3·6 | 2·9 | 2 | | 10·0 | Id.; id. |
| | 9 | 180 | 36·1 | 34·2 | 1·9 | 4·2 | 1·7 | 2 | | 2·5 | Stars rather dim. |
| | 10 | 206 | 35·9 | 33·9 | 2·0 | 2·7 | 2·2 | 0 | | 1·5 | Scud, &c. to N. |
| | 11 | 238 | 34·9 | 33·0 | 1·9 | 2·8 | 2·5 | 31 | | 1·0 | Thin clouds to E. and S. |
| | 12 | 266 | 34·1 | 32·6 | 1·5 | 1·8 | 1·2 | 31 | | 0·5 | Id. |
| | 13 | 29·292 | 33·1 | 31·2 | 1·9 | 1·1 | 0·9 | 31 | | 0·2 | Stars dim near horizon. |
| | 14 | 300 | 31·7 | 29·7 | 2·0 | 1·2 | 0·0 | | | 0·2 | Scud and cumuli. |
| | 15 | 308 | 31·0 | 29·2 | 1·8 | 0·4 | 0·1 | 29 | | 0·7 | Scud and cirro-strati to SE.; stars very clear. |
| | 16 | 310 | 29·6 | 28·2 | 1·4 | 0·4 | 0·2 | 28 | | 0·2 | Id.; id. |
| | 17 | 300 | 31·1 | 29·6 | 1·5 | 0·5 | 0·6 | 30 | 2 : — : — | 0·2 | Scud to S. |
| | 18 | 302 | 31·6 | 29·1 | 2·5 | 1·1 | 1·7 | 31 | | 0·2 | Scud and cir.-str. on E. and S. hor.; stars very clear. |
| | 19 | 323 | 31·2 | 29·0 | 2·2 | 1·9 | 0·3 | 30 | | 0·5 | Scud to E.; cirro-strati to S. |
| | 20 | 340 | 30·6 | 28·2 | 2·4 | 0·9 | 0·4 | 29 | 2 : — : — | 1·0 | Id. |
| | 21 | 370 | 29·0 | 27·0 | 2·0 | 0·9 | 0·3 | 28 | | 1·0 | Cumulo-strati, cirro-strati; scud. |
| | 22 | 383 | 29·3 | 27·4 | 1·9 | 0·3 | 0·3 | 28 | — : — : 2 | 1·0 | Diffuse cirri; cumulo-strati, cirro-strati. |
| | 23 | 403 | 31·4 | 29·2 | 2·2 | 0·1 | 0·1 | 28 | — : — : 1 | 2·5 | Woolly cirri; id., id. |
| 10 | 0 | 414 | 34·5 | 32·8 | 1·7 | 0·8 | 1·3 | 30 | — : 1 : — | 3·0 | Cirro-cumulo-strati; cumuli and cum.-str. to E. |
| | 1 | 427 | 35·9 | 32·7 | 3·2 | 1·1 | 0·3 | 28 | — : 2 : — | 7·0 | Id.; id. id. N. and E. |
| | 2 | 439 | 37·0 | 34·3 | 2·7 | 0·6 | 1·1 | 31 | 1 : — : — | 2·5 | Loose cumuli; cumuli, cumulo-strati, nimbi. |
| | 3 | 453 | 37·9 | 34·9 | 3·0 | 1·6 | 1·1 | 31 | — : 0 : — | 9·5 | Cirro-cumulous-scud; snow showers around. |
| | 4 | 466 | 36·7 | 34·2 | 2·5 | 0·6 | 0·3 | 30 | — : 1 : — | 8·0 | As before; heavy shower of snow at 4h 20m. |
| | 5 | 477 | 33·7 | 32·3 | 1·4 | 1·6 | 0·5 | 31 | 1 : — : — | 1·0 | Patches of loose cumuli and scud. |
| | 6 | 505 | 33·6 | 32·3 | 1·3 | 0·8 | 0·6 | 30 | 1 : — : — | 10·0 | Scud; passing showers of snow; cumuli to E. |
| | 7 | 516 | 35·1 | 32·2 | 2·9 | 0·9 | 1·9 | 31 | 0 : — : — | 8·0 | Id. |
| | 8 | 533 | 34·7 | 31·9 | 2·8 | 1·5 | 0·9 | 30 | | 8·0 | Id. |
| | 9 | 546 | 33·7 | 32·0 | 1·7 | 1·6 | 1·2 | 31 | | 1·0 | Clouds to E. |
| | 10 | 569 | 34·0 | 31·0 | 3·0 | 1·6 | 1·9 | 0 | | 4·0 | Scud. |
| | 11 | 589 | 32·9 | 31·4 | 1·5 | 1·5 | 1·6 | 31 | | 10·0 | Snow falling. |
| | 12 | 600 | 31·9 | 31·3 | 0·6 | 2·1 | 1·2 | 30 | | 10·0 | Heavy snow. |
| 11 | 0 | ..... | ... | ... | ... | 1·9 | ... | | | | |
| | 13 | 29·785 | 22·0 | ... | ... | 1·1 | 0·0 | | | 5·0 | Thin haze over the sky; faint auroral light? |
| | 14 | 778 | 24·0 | 24·0 | ... | 0·0 | 0·0 | | | 6·0 | Haze rather thicker. |
| | 15 | 763 | 25·8 | 25·3 | 0·5 | 0·0 | 0·0 | | | 9·0 | Haze much thicker; stars scarcely visible. |
| | 16 | 747 | 26·8 | 26·1 | 0·7 | 0·0 | 0·0 | | | 10·0 | Thick and dark; 16½h snowing. |
| | 17 | 734 | 27·8 | 27·2 | 0·6 | 0·0 | 0·0 | | | 10·0 | Id.; snowing. |
| | 18 | 720 | 29·3 | 28·9 | 0·4 | 0·0 | 0·0 | | | 10·0 | Id.; id. |
| | 19 | 704 | 29·2 | 28·8 | 0·4 | 0·0 | 0·0 | | | 10·0 | Id.; id. |
| | 20 | 694 | 29·4 | 28·9 | 0·5 | 0·0 | 0·0 | | | 10·0 | Snow ceased. |
| | 21 | 703 | 31·0 | 30·0 | 1·0 | 0·0 | 0·0 | | | 10·0 | Scud and dense homogeneous clouds. |
| | 22 | 696 | 32·7 | 31·7 | 1·0 | 0·0 | 0·0 | | 12 : — : — | 10·0 | Loose scud to E.; dense cirro-strati. |
| | 23 | 687 | 35·3 | 32·4 | 1·9 | 0·0 | 0·0 | 17 | | 10·0 | Cirro-strati; patches of scud; clearing to S. and SW. |
| 12 | 0 | 702 | 37·6 | 35·6 | 2·0 | 0·0 | 0·0 | 20 | 22 : — : — | 10·0 | Thin loose scud; cirrous clouds. |
| | 1 | 703 | 36·3 | 35·9 | 0·4 | 0·0 | 0·0 | | | 10·0 | Shower of snow since 0h 30m. |
| | 2 | 696 | 38·7 | 36·3 | 2·4 | 0·0 | 0·0 | 20 | 28 : — : — | 9·5 | Scud; fine cirri; occasional flakes of snow. |
| | 3 | 704 | 38·2 | 36·0 | 2·2 | 0·0 | 0·0 | 19 | 26 : — : — | 10·0 | Id.; cirrous clouds to E. |
| | 4 | 704 | 38·1 | 36·0 | 2·1 | 0·0 | 0·0 | | 28 : — : — | 10·0 | Id. |
| | 5 | 717 | 37·0 | 35·4 | 1·6 | 0·0 | 0·0 | | | 10·0 | Id.; a few drops of rain. |

The direction of the wind is indicated by the number of the point of the compass, reckoning N. = 0, E. = 8, S. = 16, W. = 24. The motions of the three strata of clouds, Sc. (scud), C.-s. (cirro-stratus), and Cir. (cirrus), are indicated in a similar manner.

| Gött. Mean Time. | Barometer at 32°. | Thermometers. Dry. | Wet. | Diff. | Wind. Maximum force in 1h. | 10m. | From | Clouds, Sc. : C.-s. : Ci., moving from | Sky clouded. | Species of Clouds and Meteorological Remarks. |
|---|---|---|---|---|---|---|---|---|---|---|
| d. h. | in. | ° | ° | ° | lbs. | lbs. | pt. | pt. pt. pt. | 0—10. | |
| 12 6 | 29·729 | 35·7 | 34·7 | 1·0 | 0·0 | 0·0 | | | 10·0 | Scud; a few drops of rain. |
| 7 | 743 | 35·0 | 34·3 | 0·7 | 0·0 | 0·0 | | | 10·0 | Id. |
| 8 | 750 | 34·9 | 34·2 | 0·7 | 0·0 | 0·0 | | | 10·0 | Id.; cirrous clouds; a few stars visible. |
| 9 | 757 | 31·5 | ... | ... | 0·0 | 0·0 | | | 1·0? | Stars rather dim. |
| 10 | 766 | 30·9 | 31·0 | ... | 0·0 | 0·0 | | | 0·0 | Id. |
| 11 | 773 | 31·6 | 31·7 | ... | 0·0 | 0·0 | | | 0·0 | Id. |
| 12 | 783 | 28·6 | 28·8 | ... | 0·0 | 0·0 | | | 0·2 | Id.; haze on horizon. |
| 13 | 29·789 | 30·0 | 29·9 | 0·1 | 0·0 | 0·0 | | | 2·0 | Clouds or thick haze to N. |
| 14 | 790 | 30·7 | 30·7 | ... | 0·0 | 0·0 | | | 3·0 | Hazy all round. |
| 15 | 797 | 32·0 | 31·9 | 0·1 | 0·1 | 0·0 | 20 | | 10·0 | Overcast. |
| 16 | 788 | 31·6 | 31·8 | ... | 0·0 | 0·0 | | | 0·5? | Hazy. |
| 17 | 780 | 29·7 | 29·4 | 0·3 | 0·0 | 0·0 | | | 0·2 | Id. |
| 18 | 783 | 29·4 | 29·4 | ... | 0·0 | 0·0 | | | 0·5 | Scud; streaks of cirri. |
| 19 | 789 | 30·9 | 30·8 | 0·1 | 0·0 | 0·0 | | | 3·5 | Id. and cirri. |
| 20 | 784 | 34·0 | 32·8 | 1·2 | 0·0 | 0·0 | 21 | 21 : — : — | 10·0 | Thick scud. |
| 21 | 792 | 35·7 | 35·2 | 0·5 | 0·1 | 0·0 | 17 | | 10·0 | Id. |
| 22 | 789 | 36·2 | 35·9 | 0·3 | 0·2 | 0·0 | 18 | 20 : — : — | 10·0 | Scud; dense nearly homogen. cir.-str.; very fine rain. |
| 23 | 779 | 39·1 | 39·2 | ... | 0·2 | 0·2 | 19 | | 10·0 | As at 22h; clearing a little to S. |
| 13 0 | 786 | 38·3 | 37·5 | 0·8 | 0·4 | 0·1 | 20 | | 10·0 | Scud and dense cirro-stratus. |
| 1 | 785 | 38·7 | 38·0 | 0·7 | 0·2 | 0·1 | 20 | | 10·0 | Light rain. |
| 2 | 772 | 38·6 | 37·9 | 0·7 | 0·3 | 0·3 | 20 | | 10·0 | Scud. |
| 3 | 761 | 38·3 | 37·2 | 1·1 | 1·3 | 0·7 | 20 | 21 : — : — | 9·7 | Thin smoky scud; cirri to S. |
| 4 | 759 | 38·2 | 37·0 | 1·2 | 1·0 | 0·2 | 22 | 21 : — : — | 10·0 | Scud. |
| 5 | 750 | 37·8 | 36·7 | 1·1 | 1·0 | 0·7 | 20 | 21 : — : 31 | 8·0 | Id.; woolly cirri in lines from N by W. to S by E. |
| 6 | 747 | 37·6 | 36·5 | 1·1 | 0·4 | 0·3 | 22 | 21 : — : 31 | 7·5 | Id.; id. |
| 7 | 751 | 37·0 | 36·0 | 1·0 | 0·3 | 0·2 | 21 | | 8·0 | Thin loose scud; cirri. |
| 8 | 750 | 37·5 | 36·3 | 1·2 | 0·3 | 0·2 | 21 | | 2·0? | Stars very dim. |
| 9 | 730 | 38·1 | 37·0 | 1·1 | 0·5 | 0·2 | 20 | | 2·0 | Id. |
| 10 | 731 | 37·6 | 36·6 | 1·0 | 0·2 | 0·2 | 20 | | 1·0 | Loose scud to E. |
| 11 | 725 | 38·0 | 36·9 | 1·1 | 0·3 | 0·2 | 20 | | 0·0 | Hazy. |
| 12 | 745 | 38·5 | 37·5 | 1·0 | 0·3 | 0·2 | 19 | | 10·0 | Very dark. |
| 13 | 29·725 | 38·4 | 37·5 | 0·9 | 0·1 | 0·2 | 19 | | 10·0 | Very dark. |
| 14 | 708 | 38·8 | 38·0 | 0·8 | 0·1 | 0·1 | 22 | | 10·0 | Id. |
| 15 | 689 | 39·2 | 38·3 | 0·9 | 0·7 | 0·6 | 22 | | 10·0 | A few stars faintly visible in zenith. |
| 16 | 683 | 39·2 | 38.4 | 0·8 | 0·3 | 0·1 | 21 | | 10·0 | Dark. |
| 17 | 667 | 39·4 | 38·8 | 0·6 | 0·3 | 0·1 | | | 10·0 | Light rain. |
| 18 | 667 | 39·7 | 39·2 | 0·5 | 0·2 | 0·1 | 21 | | 10·0 | Id.; smart shower since 17h. |
| 19 | 659 | 40·0 | 39·3 | 0·7 | 0·3 | 0·5 | 22 | 22 : — : — | 10·0 | Loose scud; cirrous clouds. |
| 20 | 660 | 40·5 | 39·7 | 0·8 | 0·6 | 0·4 | 23 | 21 : — : — | 10·0 | Scud; thick cirro-strati. |
| 21 | 654 | 40·8 | 40·0 | 0·8 | 0·4 | 0·3 | 21 | | 10·0 | Id.; id.; very fine rain. |
| 22 | 654 | 41·2 | 40·8 | 0·4 | 0·4 | 0·0 | | | 10·0 | Nearly homogeneous loose scud. |
| 23 | 649 | 42·7 | 42·1 | 0·6 | 0·0 | 0·0 | | | 10·0 | Scotch mist. |
| 14 0 | 645 | 42·4 | 42·0 | 0·4 | 0·4 | 0·2 | 21 | | 10·0 | Id. |
| 1 | 632 | 42·8 | 42·2 | 0·6 | 0·2 | 0·0 | | | 10·0 | Id. |
| 2 | 622 | 44·1 | 43·7 | 0·4 | 0·3 | 0·0 | 20 | | 10·0 | Id. |
| 3 | 607 | 45·1 | 44·1 | 1·0 | 0·7 | 0·3 | 21 | 20 : — : — | 10·0 | Scud. |
| 4 | 595 | 44·9 | 44·0 | 0·9 | 0·8 | 0·4 | 20 | 20 : — : — | 10·0 | Id. |
| 5 | 594 | 44·7 | 43·7 | 1·0 | 0·8 | 0·0 | | 20 : — : — | 10·0 | Id.; cirrous clouds; snow almost gone. |
| 6 | 597 | 43·6 | 42·5 | 1·1 | 0·6 | 0·2 | 20 | 22 : — : — | 10·0 | Thin smoky scud; cirrous clouds. |
| 7 | 588 | 43·1 | 42·2 | 0·9 | 0·2 | 0·0 | | | 10·0 | Scud; streaks of light to SW. |
| 8 | 574 | 44·0 | 42·9 | 1·1 | 0·2 | 0·1 | 18 | | 10·0 | Very dark. |
| 9 | 557 | 44·5 | 43·4 | 1·1 | 2·0 | 0·6 | 22 | | 10·0 | Id. |
| 10 | 546 | 44·3 | 43·3 | 1·0 | 0·5 | 0·5 | 19 | | 10·0 | Id. |
| 11 | 518 | 45·0 | 43·3 | 1·7 | 0·4 | 1·1 | 20 | | 10·0 | Clouds broken; scud, and cirrous clouds. |
| 12 | 512 | 44·9 | 43·4 | 1·5 | 0·8 | 0·2 | 20 | | 10·0 | Dark. |

The direction of the wind is indicated by the number of the point of the compass, reckoning N. = 0, E. = 8, S. = 16, W. = 24. The motions of the three strata of clouds, Sc. (scud), C.-s. (cirro-stratus), and Cir. (cirrus), are indicated in a similar manner.

| Gött. Mean Time. | | Barometer at 32°. | Thermometers. Dry. | Wet. | Diff. | Wind. Maximum force in 1h. | 10m. | From | Clouds, Sc. : C.-s. : Ci., moving from | Sky clouded. | Species of Clouds and Meteorological Remarks. |
|---|---|---|---|---|---|---|---|---|---|---|---|
| d. | h. | in. | ° | ° | ° | lbs. | lbs. | pt. | pt. pt. pt. | 0—10. | |
| 14 | 13 | 29·494 | 45·0 | 43·2 | 1·8 | 0·6 | 0·2 | 20 | | 10·0 | Dark. |
| | 14 | 483 | 45·3 | 43·7 | 1·6 | 0·5 | 0·3 | 20 | | 10·0 | Id.; very light rain. |
| | 15 | 456 | 45·3 | 43·9 | 1·4 | 1·2 | 1·0 | 18 | | 10·0 | Id.; id. |
| | 16 | 450 | 44·7 | 44·1 | 0·6 | 1·5 | 0·4 | 19 | | 10·0 | Pitch dark; id.; wind in gusts. |
| | 17 | 441 | 45·9 | 44·9 | 1·0 | 1·7 | 1·2 | 20 | | 10·0 | Id.; light rain. |
| | 18 | 434 | 46·1 | 44·9 | 1·2 | 1·5 | 0·7 | 20 | | 10·0 | Id. |
| | 19 | 422 | 45·8 | 44·6 | 1·2 | 0·7 | 0·3 | 20 | | 10·0 | Id. |
| | 20 | 424 | 45·4 | 44·3 | 1·1 | 1·0 | 0·2 | 20 | 22 : — : — | 10·0 | Scud. |
| | 21 | 441 | 45·6 | 44·2 | 1·4 | 0·7 | 0·1 | 21 | 21 : — : — | 10·0 | Id. |
| | 22 | 455 | 45·2 | 44·3 | 0·9 | 0·4 | 0·3 | 20 | 21 : 21 : — | 10·0 | Id.; cirro-strati. |
| | 23 | 477 | 46·8 | 45·3 | 1·5 | 0·9 | 0·1 | 21 | | 10·0 | Id.; id. |
| 15 | 0 | 490 | 47·0 | 43·5 | 3·5 | 0·2 | 0·3 | 22 | 23 : 24 : — | 7·0 | Thin scud; cirro-cumulo-strati. |
| | 1 | 500 | 47·7 | 43·7 | 4·0 | 1·0 | 1·2 | 28 | 26 : — : 20 | 4·0 | Id.; cirri lying NNE. to SSW.; cir.-cum.-str. |
| | 2 | 523 | 48·1 | 43·1 | 5·0 | 1·0 | 0·9 | 27 | 27 : 20 : 20 | 9·0 | Loose scud; cir.-cum.-str.; mottled and linear cirri. |
| | 3 | 542 | 47·8 | 43·2 | 4·6 | 0·3 | 0·5 | 23 | 30 : 20 : — | 9·7 | Scud; cirro-cumulo-strati; loose cumuli to S. |
| | 4 | 564 | 46·3 | 41·2 | 5·1 | 0·6 | 0·6 | 23 | — : 20 : — | 10·0 | Id.; id. |
| | 5 | 590 | 43·9 | 39·5 | 4·4 | 0·2 | 0·2 | 22 | 26 : 20 : — | 9·5 | Id.; id.; curled cirri. |
| | 6 | 611 | 40·7 | 38·0 | 2·7 | 0·6 | 0·0 | 20 | | 8·0 | Cir.-cum.-str.; shower since 6h; scud on Cheviot. |
| | 7 | 632 | 39·2 | 36·3 | 2·9 | 0·0 | 0·2 | 27 | | 1·0 | Dense clouds to SE. |
| | 8 | 658 | 37·8 | 35·0 | 2·8 | 0·2 | 0·1 | 25 | | 0·0 | Clear. |
| | 9 | 686 | 35·9 | 33·9 | 2·0 | 0·1 | 0·0 | 22 | | 0·0 | Id. |
| | 10 | 698 | 36·7 | 34·1 | 2·6 | 0·3 | 0·2 | 20 | | 0·0 | Id. |
| | 11 | 706 | 35·0 | 33·3 | 1·7 | 0·1 | 0·1 | 20 | | 0·1 | Id.; a patch of scud to N. |
| | 12 | 718 | 35·4 | 33·4 | 2·0 | 0·4 | 0·1 | 20 | | 0·0 | Id. |
| | 13 | 29·723 | 35·9 | 33·7 | 2·2 | 0·2 | 0·2 | 23 | | 0·0 | Clear. |
| | 14 | 727 | 35·7 | 33·7 | 2·0 | 0·3 | 0·2 | 21 | | 0·0 | Stars rather dim. |
| | 15 | 729 | 35·2 | 33·9 | 1·3 | 0·6 | 0·1 | 20 | | 0·2 | Patch of scud to NW. |
| | 16 | 723 | 34·4 | 33·4 | 1·0 | 0·4 | 0·0 | | | 0·0 | Stars rather dim. |
| | 17 | 724 | 34·7 | 33·6 | 1·1 | 0·1 | 0·1 | 21 | | 0·2 | Masses of scud. |
| | 18 | 725 | 37·1 | 35·6 | 1·5 | 0·4 | 0·1 | 20 | | 4·0 | Light shower from thin scud. |
| | 19 | 729 | 37·9 | 36·1 | 1·8 | 0·4 | 0·0 | 20 | | 9·7 | Scud; light rain; sky to NE. |
| | 20 | 731 | 37·3 | 35·3 | 2·0 | 0·4 | 0·2 | 20 | 24 : — : — | 3·0 | Thin loose scud. |
| | 21 | 735 | 37·6 | 35·8 | 1·8 | 0·8 | 0·3 | 24 | 25 : — : — | 3·0 | Id.; thick scud on Cheviot; cir.-str. to E. |
| | 22 | 739 | 41·3 | 37·9 | 3·4 | 1·9 | 2·1 | 24 | 24 : — : — | 6·0 | Loose scud; light rain. |
| | 23 | 746 | 41·9 | 37·9 | 4·0 | 2·3 | 1·3 | 25 | | 2·0 | Scud on horizon. |
| 16 | 0 | 760 | 43·1 | 38·8 | 4·3 | 4·1 | 2·8 | 27 | 27 : — : — | 0·7 | Loose cumuli chiefly to E. |
| | 1 | 761 | 44·4 | 38·7 | 5·7 | 2·5 | 2·5 | 27 | | 1·0 | Id. |
| | 2 | 761 | 44·7 | 39·7 | 5·0 | 2·6 | 1·8 | 25 | | 1·5 | Loose cumuli on SSW. horizon; cirrous clouds to S. |
| | 3 | 771 | 44·4 | 39·6 | 4·8 | 2·5 | 3·0 | 23 | 26 : — : — | 7·0 | Thin scud; loose cumuli over the sky. |
| | 4 | 760 | 44·7 | 40·3 | 4·4 | 3·5 | 1·3 | 20 | 25 : — : — | 7·0 | Thin scud and loose cumuli. |
| | 5 | 745 | 43·7 | 39·5 | 4·2 | 3·1 | 2·4 | 22 | 26 : — : — | 3·5 | Id.; patches of scud on horizon. |
| | 6 | 742 | 42·9 | 39·2 | 3·7 | 2·4 | 1·0 | 23 | 24 : — : — | 3·5 | Scud; cirrous-haze on E. horizon. |
| | 7 | 744 | 43·8 | 39·8 | 4·0 | 1·8 | 2·2 | 24 | | 7·0 | Id. |
| | 8 | 741 | 43·4 | 39·6 | 3·8 | 1·8 | 0·9 | 24 | | 2·0 | Id.; dark. |
| | 9 | 739 | 43·1 | 39·7 | 3·4 | 2·5 | 0·7 | 24 | | 8·0 | Id. |
| | 10 | 736 | 43·3 | 39·6 | 3·7 | 1·6 | 2·0 | 24 | | 4·0 | Id. |
| | 11 | 734 | 43·4 | 39·9 | 3·5 | 1·8 | 0·8 | 23 | | 4·0 | Id. |
| | 12 | 734 | 42·4 | 38·9 | 3·5 | 1·0 | 0·7 | 24 | | 4·0 | Id. |
| | 13 | 29·724 | 43·6 | 39·7 | 3·9 | 0·9 | 1·0 | 23 | | 8·0 | Scud. |
| | 14 | 721 | 42·7 | 39·4 | 3·3 | 0·8 | 0·3 | 20 | | 7·0 | Id.; a few drops of rain. |
| | 15 | 716 | 42·9 | 39·3 | 3·6 | 0·7 | 1·2 | 21 | | 8·0 | Id.; id. |
| | 16 | 708 | 42·4 | 38·9 | 3·5 | 0·7 | 0·1 | 20 | | 8·0 | Id.; sky to NE.; slight shower since last observation. |
| | 17 | 702 | 40·8 | 38·0 | 2·8 | 0·2 | 0·2 | 23 | | 7·0 | Sky in zenith. |
| | 18 | 697 | 41·3 | 38·4 | 2·9 | 0·2 | 0·1 | 24 | | 7·0 | Id. |
| | 19 | 701 | 41·9 | 39·0 | 2·9 | 0·3 | 0·0 | | | 8·0 | Streaks of light to E. |
| | 20 | 702 | 41·1 | 38·2 | 2·9 | 0·2 | 0·0 | 22 | 26 : — : — | 10·0 | Scud; cirro-cumuli; cirro-strati; scud on Cheviot. |

The direction of the wind is indicated by the number of the point of the compass, reckoning N. = 0, E. = 8, S. = 16, W. = 24. The motions of the three strata of clouds, Sc. (scud), C.-s. (cirro-stratus), and Cir. (cirrus), are indicated in a similar manner.

| Gött. Mean Time. | Barometer at 32°. | Thermometers. Dry. | Wet. | Diff. | Wind. Maximum force in 1h. | 10m. | From | Clouds, Sc. : C.-s. : Ci., moving from | Sky clouded. | Species of Clouds and Meteorological Remarks. |
|---|---|---|---|---|---|---|---|---|---|---|
| d. h. | in. | ° | ° | ° | lbs. | lbs. | pt. | pt. pt. pt. | 0—10. | |
| 16 21 | 29·698 | 41·1 | 39·0 | 2·1 | 0·1 | 0·0 | 20 | 25 : — : — | 9·7 | Scud; cir.-str. to E.; greenish sky to NE.; light rain. |
| 22 | 702 | 41·7 | 39·4 | 2·3 | 0·0 | 0·0 | | 24 : — : — | 9·9 | Id.; id. NE.; cirrous clouds and haze. |
| 23 | 695 | 43·1 | 41·0 | 2·1 | 0·3 | 0·1 | 21 | | 9·9 | Id.; id.; id. |
| 17 0 | 693 | 45·3 | 42·6 | 2·7 | 0·1 | 0·1 | 20 | | 9·7 | As before; breaking up. |
| 1 | 687 | 45·4 | 42·1 | 3·3 | 0·3 | 0·2 | 21 | | 9·8 | Id.; id. |
| 2 | 671 | 44·4 | 41·3 | 3·1 | 0·5 | 0·4 | 21 | 25 : — : — | 10·0 | Scud; thick cirro-strati. |
| 3 | 665 | 42·1 | 40·7 | 1·4 | 0·4 | 0·0 | | 25 : — : — | 10·0 | Id.; id.; rain since 2h. |
| 4 | 657 | 40·8 | 40·3 | 0·5 | 0·0 | 0·0 | | | 10·0 | Heavy shower. |
| 5 | 646 | 40·5 | 40·2 | 0·3 | 0·0 | 0·0 | | | 10·0 | Scud; cirrous clouds. |
| 6 | 639 | 39·0 | 38·9 | 0·1 | 0·0 | 0·0 | | 25 : — : — | 10·0 | Id., moving very slowly; cirrous clouds. |
| 7 | 637 | 38·9 | 38·4 | 0·5 | 0·0 | 0·0 | | | 10·0 | Id. id.; id. |
| 8 | 628 | 39·6 | 39·0 | 0·6 | 0·0 | 0·0 | | | 10·0 | Dark. |
| 9 | 623 | 39·5 | 38·9 | 0·6 | 0·0 | 0·0 | | | 10·0 | Id.; light rain. |
| 10 | 606 | 38·9 | 38·4 | 0·5 | 0·0 | 0·0 | | | 10·0 | Id.; id. |
| 11 | 595 | 39·3 | 39·0 | 0·3 | 0·0 | 0·0 | | | 10·0 | Id.; id. |
| 12 | 584 | 39·1 | 38·9 | 0·2 | 0·0 | 0·0 | | | 10·0 | Dark; light rain. |
| 23½ | 29·378 | ... | ... | ... | 0·0 | 0·0 | | | ... | Drizzling rain throughout the day. |
| 18 13 | 28·976 | 40·1 | 39·5 | 0·6 | 1·9 | 0·5 | 21 | | 10·0 | Dark; light rain. |
| 14 | 957 | 42·3 | 40·8 | 1·5 | 0·4 | 1·3 | 20 | | 7·0 | Stars indistinct. |
| 15 | 932 | 41·4 | 39·9 | 1·5 | 0·8 | 0·7 | 20 | | 9·5 | Id. |
| 16 | 924 | 41·4 | 39·5 | 1·9 | 0·9 | 0·7 | 20 | | 10·0 | Very dark. |
| 17 | 905 | 41·3 | 39·0 | 2·3 | 1·1 | 0·6 | 20 | | 10·0 | Id. |
| 18 | 898 | 41·1 | 39·0 | 2·1 | 0·4 | 0·2 | 20 | | 10·0 | Id. |
| 19 | 887 | 40·7 | 38·8 | 1·9 | 0·4 | 0·1 | 28 | | 10·0 | Light rain. [19h. |
| 20 | 926 | 36·2 | 35·4 | 0·8 | 0·2 | 0·0 | | | 10·0 | Patches of scud to S.; light rain; heavy shower since |
| 21 | 954 | 36·3 | 35·6 | 0·7 | 0·1 | 0·0 | 30 | 0 : — : — | 10·0 | Scud; light rain. |
| 22 | 28·977 | 36·0 | 35·4 | 0·6 | 0·3 | 0·2 | 0 | 0 : — : — | 10·0 | Id.; id. |
| 23 | 29·006 | 36·8 | 35·7 | 1·1 | 0·6 | 0·6 | 0 | 0 : — : — | 10·0 | Id.; id. |
| 19 0 | 040 | 36·0 | 34·9 | 1·1 | 3·3 | 1·3 | 0 | 0 : — : — | 10·0 | Id.; showers of snow and sleet. |
| 1 | 072 | 36·2 | 33·9 | 2·3 | 2·9 | 2·3 | 0 | 0 : — : — | 10·0 | Id.; id. |
| 2 | 110 | 35·3 | 33·2 | 2·1 | 2·8 | 2·2 | 0 | | 10·0 | Id.; shower of snow. |
| 3 | 133 | 36·1 | 32·9 | 3·2 | 1·8 | 2·0 | 31 | 0 : — : — | 10·0 | Id.; dense mass of cirro-strati. |
| 4 | 158 | 36·7 | 33·0 | 3·7 | 3·0 | 1·1 | 31 | 0 : 22 : 22 | 9·9 | Id.; woolly cirri and cirro-strati. [of snow. |
| 5 | 186 | 34·8 | 32·4 | 2·4 | 1·5 | 0·9 | 29 | — : 28 : 22 | 6·0 | Woolly and linear cirri; cum.-str. and nimbi; shower |
| 6 | 205 | 34·3 | 32·3 | 2·0 | 0·8 | 0·8 | 30 | 30 : — : — | 5·0 | Scud; cirri to E. |
| 7 | 241 | 33·1 | 31·0 | 2·1 | 2·8 | 0·9 | 30 | | 10·0 | Shower of snow. |
| 8 | 276 | 32·2 | 30·1 | 2·1 | 2·0 | 1·7 | 30 | | 10·0 | Id. |
| 9 | 313 | 30·9 | 29·9 | 1·0 | 2·6 | 1·1 | 31 | | 10·0 | Snowing heavily. |
| 10 | 325 | 31·2 | 28·8 | 2·4 | 1·9 | 0·4 | 29 | | 4·0 | Stars dim. |
| 11 | 353 | 29·7 | 27·2 | 2·5 | 0·5 | 0·5 | 28 | | 1·0 | Thin clouds, chiefly to N. |
| 12 | 365 | 29·3 | 26·8 | 2·5 | 1·5 | 1·2 | 28 | | 0·5 | Id.; stars bright. |
| 13 | 29·383 | 28·8 | 26·0 | 2·8 | 1·6 | 0·5 | 28 | | 0·2 | Cirri to SE.; id. |
| 14 | 385 | 27·3 | 24·9 | 2·4 | 1·0 | 0·6 | 27 | | 0·0 | Clear. |
| 15 | 393 | 27·2 | 24·9 | 2·3 | 1·3 | 0·4 | 27 | | 0·0 | Id. |
| 16 | 409 | 29·7 | 27·0 | 2·7 | 1·6 | 1·9 | 28 | | 5·0 | Hazy; stars dim; small flakes of snow. |
| 17 | 438 | 30·5 | 28·6 | 1·9 | 3·1 | 0·7 | 30 | | 3·0 | Cirrous clouds and scud; id. |
| 18 | 470 | 29·7 | 27·9 | 1·8 | 0·9 | 0·2 | 29 | | 0·7 | Id. to S. [to E. |
| 19 | 475 | 28·6 | 26·9 | 1·7 | 0·4 | 0·6 | 29 | | 0·2 | Castellated cum.-str. on E. hor.; cir.-str.; cir.-haze |
| 20 | 499 | 28·7 | 26·3 | 2·4 | 1·1 | 0·9 | 29 | | 0·5 | Cir.-str. and cum.-str. on E. hor.; scud on Cheviot. |
| 21 | 525 | 28·1 | 26·0 | 2·1 | 0·5 | 0·4 | 28 | | 0·5 | Id. |
| 22 | 531 | 29·4 | 27·0 | 2·4 | 0·3 | 0·4 | 29 | | 0·2 | Cirro-strati, cumulo-strati, and cirrous-haze on E. hor. |
| 23 | 544 | 30·9 | 28·2 | 2·7 | 0·6 | 0·3 | 30 | | 0·1 | Loose cumuli and cirrous-haze on E. horizon. |
| 20 0 | 557 | 31·9 | 29·0 | 2·9 | 0·4 | 0·3 | 28 | | 0·5 | Cir.-str., cir.-haze, and cum.-str. on hor., except to W. |
| 1 | 557 | 32·8 | 30·0 | 2·8 | 0·4 | 0·4 | 28 | | 0·5 | Id., id. |
| 2 | 553 | 34·2 | 31·0 | 3·2 | 0·4 | 0·8 | 28 | | 0·5 | Cum. to N.; pat. of scud and cir.-haze to SE. and S. |

The direction of the wind is indicated by the number of the point of the compass, reckoning N. = 0, E. = 8, S. = 16, W. = 24. The motions of the three strata of clouds, Sc. (scud), C.-s. (cirro-stratus), and Cir. (cirrus), are indicated in a similar manner.

Feb. 19d 12h. The vane of the anemometer was found to be frozen up, the opening being towards the north; it being found difficult to remove the ice, the vane was set with its opening to the wind (NW). The ice was removed at 22h.

| Gött. Mean Time. | | Barometer at 32°. | Thermometers. | | | Wind. | | | Clouds, Sc. : C.-s. : Ci., moving from | Sky clouded. | Species of Clouds and Meteorological Remarks. |
|---|---|---|---|---|---|---|---|---|---|---|---|
| | | | Dry. | Wet. | Diff. | Maximum force in 1h. | Maximum force in 10m. | From | | | |
| d. | h. | in. | ° | ° | ° | lbs. | lbs. | pt. | pt. pt. pt. | 0—10. | |
| 20 | 3 | 29·531 | 34·5 | 30·7 | 3·8 | 0·6 | 0·4 | 28 | | 1·0 | Fine cumuli all round the horizon. |
| | 4 | 526 | 34·4 | 30·6 | 3·8 | 0·4 | 0·1 | 25 | 26 : — : — | 2·0 | Cumuli and cum.-str.; nimbi to E.; fine blue sky. |
| | 5 | 517 | 33·7 | 29·7 | 4·0 | 0·3 | 0·0 | | 26 : — : — | 2·0 | Cum.-str. on hor.; patches of cum.; cir.-cum. to W. |
| | 6 | 511 | 32·1 | 29·1 | 3·0 | 0·0 | 0·0 | 24 | 26 : — : — | 9·0 | Scud or loose cum.; snowing to SW.; cum. and cum.-str. |
| | 7 | 509 | 28·1 | 27·0 | 1·1 | 0·0 | 0·0 | | | 1·0 | Scud; cumuli, &c., to E. |
| | 8 | 489 | 28·0 | 27·0 | 1·0 | 0·0 | 0·0 | | | 0·0 | Clear; stars bright. |
| | 9 | 484 | 27·0 | 25·5 | 1·5 | 0·0 | 0·0 | | | 0·0 | Id.; id. |
| | 10 | 452 | 27·3 | 25·0 | 2·3 | 0·0 | 0·0 | | | 0·0 | Id.; id. |
| | 11 | 438 | 27·5 | 25·0 | 2·5 | 0·2 | 0·5 | 22 | | 0·0 | Id.; id. |
| | 12 | 413 | 27·9 | 25·4 | 2·5 | 0·3 | 0·2 | 21 | | 0·0 | Id.; id. |
| | 13 | 29·383 | 26·9 | 24·8 | 2·1 | 0·1 | 0·0 | | | 0·0 | Clear; stars bright. |
| | 14 | 362 | 26·0 | 24·5 | 1·5 | 0·2 | 0·1 | | | 0·5 | Clouds on N. and E. horizon. |
| | 15 | 318 | 27·0 | 25·2 | 1·8 | 0·2 | 0·2 | 20 | | 5·0 | Clear in zenith; clouds all round. |
| | 16 | 309 | 28·8 | 26·7 | 2·1 | 0·2 | 0·1 | 20 | | 5·0 | Hazy in zenith; id. |
| | 17 | 283 | 29·8 | 28·0 | 1·8 | 0·0 | 0·0 | | | 10·0 | Light fall of snow. |
| | 18 | 290 | 28·3 | 27·6 | 0·7 | 0·2 | 0·0 | | | 10·0 | Snowing heavily; 0·5 inch. of snow fallen since 17h. |
| | 19 | 285 | 26·6 | 25·8 | 0·8 | 0·0 | 0·0 | | | 10·0 | Light fall of snow. |
| | 20 | 274 | 25·0 | 24·7 | 0·3 | 0·0 | 0·0 | | 28 : — : — | 9·0 | Scud; strati to SE.; cirri to NE. |
| | 21 | 274 | 21·7 | 22·1 | 0·6 | 0·0 | 0·0 | | — : 26 : — | 5·0 | Cir.-cum.-str. and woolly cirri; scud to S. |
| | 22 | 257 | 25·4 | 25·0 | 0·4 | 0·0 | 0·0 | | — : 26 : — | 5·0 | Cir.-cum.-str. radiating from WNW.; strati, cumuli, [scud. |
| | 23 | 254 | 28·9 | 27·9 | 1·0 | 0·0 | 0·0 | | | 8·5 | As before, but much thicker; cum. to E.; sky to NE. |
| 21 | 0 | 252 | 29·9 | 27·8 | 2·1 | 0·0 | 0·0 | | | 8·5 | The same. |
| | 1 | 234 | 28·8 | 25·8 | 3·0 | 0·0 | 0·0 | 30 | — : — : 27 | 2·0 | Woolly cirri and cirrous-haze; scud to E. |
| | 2 | 232 | 31·0 | 27·7 | 3·3 | 0·1 | 0·0 | 1 | — : 4 : — | 7·0 | Cirro-cumulo-strati; diffuse and linear cirri to NW. |
| | 3 | 202 | 32·5 | 28·7 | 3·8 | 0·2 | 0·3 | 3 | 4 : — : 26 | 8·0 | Loose cumuli; diffuse cirri; solar halo. |
| | 4 | 193 | 31·1 | 28·0 | 3·1 | 0·4 | 0·1 | 2 | 4 : — : 26 | 4·0 | Id.; id.; halo gone. |
| | 5 | 185 | 30·3 | 27·0 | 3·3 | 0·3 | 0·2 | 2 | | 2·5 | Id.; id.; id. |
| | 6 | 188 | 28·2 | 25·5 | 2·7 | 0·1 | 0·0 | 1 | 5 : — : — | 5·0 | Id.; cirro-strati; cirro-cumuli. |
| | 7 | 189 | 27·1 | 24·1 | 3·0 | 0·0 | 0·0 | 2 | | 0·7 | Cirro-strati on horizon; very clear. |
| | 8 | 191 | 24·5 | 22·4 | 2·1 | 0·0 | 0·0 | | | 1·0 | Clouds to E. and NE. |
| | 9 | 184 | 23·7 | 22·0 | 1·7 | 0·0 | 0·0 | | | 0·0 | Hazy on horizon. |
| | 10 | 180 | 19·5 | 19·0 | 0·5 | 0·0 | 0·0 | | | 0·0 | Clear. |
| | 11 | 183 | 16·9 | 16·9 | ... | 0·0 | 0·0 | | | 0·2 | Clouds to NE.; very clear. |
| | 12 | 186 | 18·8 | 18·9 | ... | 0·0 | 0·0 | | | 0·1 | Clouds and haze on horizon. |
| | 13 | 29·209 | 18·7 | 18·7 | ... | 0·0 | 0·0 | | | 4·0 | Scud, slight shower of snow at 13h 30m. |
| | 14 | 205 | 22·2 | 22·2 | ... | 0·0 | 0·0 | 8 | | 0·2 | Clouds on NE. horizon. |
| | 15 | 215 | 18·8 | 19·0 | ... | 0·0 | 0·0 | | | 0·2 | Id. |
| | 16 | 213 | 15·7 | 16·0 | ... | 0·0 | 0·0 | | | 0·0 | Clear. |
| | 17 | 228 | 12·3 | 12·6 | ... | 0·0 | 0·0 | | | 0·2 | Scud to E. |
| | 18 | 246 | 14·6 | 14·8 | ... | 0·0 | 0·0 | | | 0·2 | Id. to N. |
| | 19 | 260 | 12·9 | 12·4 | 0·5 | 0·0 | 0·0 | | | 0·5 | Cumuli on E. and NE. horizon. |
| | 20 | 278 | 12·0 | 12·5 | ... | 0·0 | 0·0 | | | 1·0 | Scud to E. and NE.; range of cumuli to N. and E. |
| | 21 | 310 | 15·7 | 16·0 | ... | 0·0 | 0·0 | | | 1·0 | Nimbi and cumulo-strati to NE.; cumuli to E. |
| | 22 | 334 | 20·9 | 21·2 | ... | 0·0 | 0·0 | | 5 : — : — | 6·5 | Thin scud; cumuli, cirro-cumulo-strati; slight snow. |
| | 23 | 361 | 24·7 | 24·3 | 0·4 | 0·0 | 0·0 | | | 1·0 | Cirrous-haze and cumulo-strati to E.; cirri. |
| 22 | 0 | 374 | 29·7 | 27·7 | 2·0 | 0·0 | 0·0 | | | 0·5 | Cumuli and cumulo-strati on E. horizon. |
| | 1 | 385 | 31·0 | 28·3 | 2·7 | 0·0 | 0·0 | | | 0·5 | Id.; haze. |
| | 2 | 393 | 32·2 | 28·8 | 3·4 | 0·0 | 0·0 | | | 0·5 | Cauliflower cumuli and nimbi to E. and S. |
| | 3 | 400 | 32·2 | 29·0 | 3·2 | 0·0 | 0·0 | 23 | | 0·5 | Cum., cum.-str., and haze to E.; cirro-strati to NE. |
| | 4 | 396 | 32·4 | 28·9 | 3·5 | 0·0 | 0·0 | 23 | — : — : 0 | 5·0 | Thin woolly cirri; cumuli, cumulo-strati, and haze. |
| | 5 | 396 | 32·8 | 28·9 | 3·9 | 0·2 | 0·0 | 23 | — : — : 30 | 8·0 | Woolly cirri; cumuli to SE. |
| | 6 | 397 | 30·5 | 27·1 | 3·4 | 0·2 | 0·2 | 20 | 28 : — : — | 9·7 | Cirro-cumulous-scud; cirro-cumulo-strati and cirri. |
| | 7 | 397 | 30·0 | 27·2 | 2·8 | 0·2 | 0·2 | 20 | | 9·2 | Id.; cirrous clouds. |
| | 8 | 384 | 29·6 | 27·0 | 2·6 | 0·4 | 0·7 | 22 | | 5·0 | Cirrous clouds and haze. |
| | 9 | 392 | 28·6 | 27·6 | 1·0 | 0·5 | 0·0 | | | 1·5 | Thin cirri radiating from WNW. |
| | 10 | 397 | 26·9 | 26·0 | 0·9 | 0·0 | 0·0 | | | 0·5 | Thin cirri. |

The direction of the wind is indicated by the number of the point of the compass, reckoning N. = 0, E. = 8, S. = 16, W. = 24. The motions of the three strata of clouds, Sc. (scud), C.-s. (cirro-stratus), and Cir. (cirrus), are indicated in a similar manner.

| Gött. Mean Time. | Barometer at 32°. | Thermometers. Dry. | Wet. | Diff. | Wind. Maximum force in 1h. | 10m. | From | Clouds, Sc. : C.-s. : Ci., moving from | Sky clouded. | Species of Clouds and Meteorological Remarks. |
|---|---|---|---|---|---|---|---|---|---|---|
| d. h. | in. | ° | ° | ° | lbs. | lbs. | pt. | pt. pt. pt. | 0—10. | |
| 22 11 | 29·394 | 27·9 | 26·7 | 1·2 | 0·0 | 0·0 | | | 0·5 | Thin cirri to S. |
| 12 | 404 | 27·0 | 26·0 | 1·0 | 0·0 | 0·0 | | | 0·0 | Clear. |
| 13 | 29·413 | 28·0 | 26·0 | 2·0 | 0·2 | 0·2 | 24 | | 0·0 | Clear; shooting star to S. |
| 14 | 420 | 27·2 | 24·9 | 2·3 | 0·2 | 0·2 | 24 | | 0·7 | Cirri to SW. |
| 15 | 415 | 23·9 | 22·7 | 1·2 | 0·1 | 0·0 | | | 0·7 | Id. |
| 16 | 412 | 26·0 | 24·4 | 1·6 | 0·2 | 0·1 | 21 | | 0·5 | Id. |
| 17 | 415 | 26·9 | 25·0 | 1·9 | 0·0 | 0·0 | | | 0·2? | Id. |
| 18 | 415 | 26·2 | 24·8 | 1·4 | 0·0 | 0·0 | | | 0·0? | [and cum.-str. to E. |
| 19 | 413 | 25·5 | 24·0 | 1·5 | 0·0 | 0·0 | | | 2·5 | Linear cirri lying NW by N. to SE by S.; cir.-str. |
| 20 | 419 | 21·7 | 21·1 | 0·6 | 0·0 | 0·0 | | | 0·2 | Cirri and cirro-strati; cumulo-strati on E. horizon. |
| 21 | 413 | 21·9 | 21·5 | 0·4 | 0·0 | 0·0 | | | 1·0 | Cumuli, cirro-strati, cumulo-strati, linear cirri. |
| 22 | 412 | 26·5 | 25·0 | 1·5 | 0·0 | 0·0 | | — : — : 27 | 2·0 | Woolly and linear cirri radiating from NW by N. |
| 23 | 387 | 30·0 | 28·2 | 1·8 | 0·0 | 0·0 | | | 7·0 | Woolly cirri and cirrous-haze; cum.-str.; solar halo. |
| 23 0 | 363 | 34·1 | 31·2 | 2·9 | 0·0 | 0·0 | 16 | | 9·5 | General cirrous-haze; cumulo-strati; halo. |
| 1 | 329 | 35·1 | 31·7 | 3·4 | 0·0 | 0·0 | 14 | 20 : — : — | 9·7 | Scud; dense cir.-str.; cum.-str. on E. hor.; halo gone. |
| 2 | 286 | 34·8 | 31·4 | 3·4 | 0·0 | 0·0 | 14 | 18 : — : — | 10·0 | Scud; dense cirro-strati; cumuli on E. horizon. |
| 3 | 208 | 34·9 | 32·5 | 2·4 | 0·3 | 0·1 | 14 | | 10·0 | Dense cirro-strati; a few flakes of snow at 2½h. |
| 4 | 143 | 33·4 | 30·8 | 2·6 | 0·4 | 0·4 | 14 | 14 : — : — | 10·0 | Patches of scud; very dense cirro-strati. |
| 5 | 080 | 31·8 | 32·0 | ... | 1·0 | 0·8 | 13 | | 10·0 | As before; snowing. |
| 6 | 29·018 | 30·9 | 30·0 | 0·9 | 0·5 | 0·3 | 12 | | 10·0 | Snowing. |
| 7 | 28·935 | 31·1 | 30·6 | 0·5 | 2·3 | 0·9 | 10 | | 10·0 | Id. |
| 8 | 879 | 32·1 | 31·6 | 0·5 | 0·7 | 0·3 | 12 | | 10·0 | Id., large flakes. |
| 9 | 804 | 32·4 | 31·9 | 0·5 | 0·5 | 0·0 | 10 | | 10·0 | Id., id. |
| 10 | 754 | 32·5 | 32·5 | ... | 0·5 | 0·0 | | | 10·0 | Id. |
| 11 | 710 | 32·8 | 32·2 | 0·6 | 0·0 | 0·0 | | | 10·0 | Id. |
| 12 | 682 | 32·8 | 32·2 | 0·6 | 0·0 | 0·0 | | | 10·0 | |
| 13 | 28·673 | 32·8 | 32·3 | 0·5 | 0·0 | 0·0 | | | 10·0 | Light fall of snow. |
| 14 | 666 | 32·2 | 32·3 | ... | 0·0 | 0·0 | | | 10·0 | Cirrous clouds and haze; stars occasionally. |
| 15 | 663 | 33·1 | 32·4 | 0·7 | 1·0 | 0·9 | 7 | | 10·0 | Sleet. |
| 16 | 665 | 32·6 | 32·6 | ... | 3·0 | 2·8 | 7 | | 10·0 | Id. |
| 17 | 719 | 32·7 | 32·6 | 0·1 | 2·5 | 1·6 | 7 | | 10·0 | Id.; three inches of snow on the ground. |
| 18 | 775 | 32·5 | 32·5 | ... | 1·5 | 1·5 | 7 | | 10·0 | Snowing. |
| 19 | 820 | 31·8 | 31·4 | 0·4 | 1·4 | 0·7 | 6 | 6 : — : — | 10·0 | Id.; scud. |
| 20 | 878 | 31·0 | 30·7 | 0·3 | 1·1 | 0·7 | 6 | | 10·0 | Id.; dense clouds to E. |
| 21 | 920 | 32·3 | 30·7 | 1·6 | 1·4 | 0·6 | 6 | 6 : — : — | 9·5 | Scud; light rain. |
| 22 | 28·965 | 32·7 | 31·1 | 1·6 | 0·9 | 0·6 | 8 | 8 : — : — | 9·0 | Id.; cirro-cumulo-strati. |
| 23 | 29·016 | 33·0 | 31·6 | 1·4 | 0·9 | 0·2 | 8 | | 10·0 | Homogeneous; a few flakes of snow. |
| 24 0 | 058 | 33·3 | 31·8 | 1·5 | 0·5 | 0·2 | 8 | | 10·0 | As before; slight fall of snow. |
| 1 | 094 | 33·6 | 32·1 | 1·5 | 0·2 | 0·2 | 8 | | 10·0 | Id.; id. |
| 2 | 124 | 35·0 | 32·7 | 2·3 | 0·2 | 0·4 | 9 | | 10·0 | Id.; id. |
| 3 | 144 | 33·3 | 31·7 | 1·6 | 0·2 | 0·1 | 9 | | 10·0 | |
| 4 | 164 | 32·2 | 31·2 | 1·0 | 0·2 | 0·1 | 9 | | 10·0 | |
| 5 | 194 | 31·8 | 30·2 | 1·6 | 0·0 | 0·0 | 10 | | 10·0 | |
| 6 | 234 | 30·6 | 29·8 | 0·8 | 0·1 | 0·0 | | | 10·0 | Slight fall of snow. |
| 7 | 255 | 29·5 | 29·4 | 0·1 | 0·0 | 0·0 | | | 10·0 | Id. |
| 8 | 284 | 29·4 | 29·3 | 0·1 | 0·0 | 0·0 | | | 10·0 | Id. |
| 9 | 315 | 29·4 | 29·1 | 0·3 | 0·0 | 0·0 | 10 | | 10·0 | A few flakes of snow; Moon's disc visible. |
| 10 | 329 | 29·6 | 29·0 | 0·6 | 0·0 | 0·0 | | | 10·0 | Slight snow. |
| 11 | 353 | 29·6 | 28·9 | 0·7 | 0·0 | 0·0 | | | 10·0 | Id. |
| 12 | 369 | 29·1 | 28·7 | 0·4 | 0·0 | 0·0 | | | 9·9 | Clouds breaking. |
| 25 0 | 28·990 | ... | ... | ... | 1·4 | ... | 14 | | ... | Snowing heavily. |
| 2 | 849 | ... | ... | ... | ... | ... | | | | |
| 4 | 773 | ... | ... | ... | ... | ... | | | | |
| 5½ | 762 | ... | ... | ... | ... | ... | | | | |
| 13 | 28·637 | 26·3 | 26·1 | 0·2 | 0·8 | 0·0 | | | 10·0 | |

The direction of the wind is indicated by the number of the point of the compass, reckoning N. = 0, E. = 8, S. = 16, W. = 24. The motions of the three strata of clouds, Sc. (scud), C.-s. (cirro-stratus), and Cir. (cirrus), are indicated in a similar manner.

Feb. 22d 17h. A belt of lighter sky extends from NNW. to SE. with strips of darker sky at its upper edge.

Feb. 23d 5h. The water in the cistern of the anemometer having become frozen, it was melted by pouring in hot water.

| Gött. Mean Time. | | Barometer at 32°. | Thermometers. Dry. | Wet. | Diff. | Wind. Maximum force in 1h. | 10m. | From | Clouds, Sc. : C.-s. : Ci., moving from | Sky clouded. | Species of Clouds and Meteorological Remarks. |
|---|---|---|---|---|---|---|---|---|---|---|---|
| d. | h. | in. | ° | ° | ° | lbs. | lbs. | pt. | pt. pt. pt. | 0—10. | |
| 25 | 14 | 28·612 | 26·5 | 26·3 | 0·2 | 0·0 | 0·0 | | | 10·0 | |
| | 15 | 603 | 27·9 | 27·5 | 0·4 | 0·0 | 0·0 | | | 10·0 | A few flakes of snow. |
| | 16 | 583 | 28·5 | 28·3 | 0·2 | 0·0 | 0·0 | | | 10·0 | Id. |
| | 17 | 571 | 29·4 | 29·1 | 0·3 | 0·0 | 0·0 | | | 10·0 | Heavy fall of snow. |
| | 18 | 559 | 34·0 | 34·0 | ... | 0·9 | 0·5 | 4 | | 10·0 | Sleet. |
| | 19 | 561 | 34·6 | 33·4 | 1·2 | 2·7 | 1·7 | 2 | | 10·0 | A few drops of sleet. |
| | 20 | 575 | 33·8 | 33·0 | 0·8 | 3·0 | 2·2 | 3 | | 10·0 | Shower of snow. |
| | 21 | 603 | 33·2 | 32·7 | 0·5 | 3·0 | 2·2 | 2 | | 10·0 | Light shower of snow. |
| | 22 | 627 | 33·0 | 32·7 | 0·3 | 3·9 | 1·5 | 3 | | 10·0 | Snowing rather heavily. |
| | 23 | 662 | 33·5 | 32·4 | 1·1 | 2·9 | 2·1 | 4 | | 10·0 | Slight snow. |
| 26 | 0 | 686 | 34·4 | 31·8 | 2·6 | 3·4 | 1·9 | 4 | | 10·0 | A few flakes of snow; breaking to NE. |
| | 1 | 716 | 33·2 | 31·7 | 1·5 | 3·4 | 2·7 | 4 | | 9·9 | Passing shower of snow; scud, cirro-strati. |
| | 2 | 746 | 34·3 | 30·7 | 3·6 | 4·0 | 3·3 | 3 | 4 : — : — | 9·8 | Scud. |
| | 3 | 777 | 32·6 | 29·0 | 3·6 | 4·1 | 2·7 | 3 | 3 : — : — | 9·0 | Id.; snow showers; cirro-cumulo-strati; cirro-strati. |
| | 4 | 826 | 28·6 | 28·0 | 0·6 | 5·2 | 3·6 | 3 | 3 : 2 : — | 9·5 | Id.; cirro-stratous-scud; very heavy snow and drift. |
| | 5 | 866 | 29·3 | 27·0 | 2·3 | 4·6 | 2·4 | 4 | 3 : — : 26 | 8·5 | Scud and cumuli; cirri; showers of snow. |
| | 6 | 914 | 27·3 | 26·0 | 1·3 | 4·0 | 1·5 | 2 | | 8·5 | Cumuli; woolly cirri; snowing and drifting. |
| | 7 | 949 | 27·0 | 25·0 | 2·0 | 1·8 | 1·0 | 2 | 4 : — : — | 8·0 | Scud; cumuli and woolly cirri. |
| | 8 | 28·991 | 27·4 | 25·0 | 2·4 | 2·2 | 2·7 | 2 | 2 : — : — | 7·0 | Id.; passing showers of snow. |
| | 9 | 29·026 | 26·7 | 24·8 | 1·9 | 2·3 | 2·3 | 2 | | 7·0 | Id. |
| | 10 | 059 | 25·5 | 24·4 | 1·1 | 2·1 | 1·5 | 0 | | 10·0 | |
| | 11 | 085 | 24·7 | 23·5 | 1·2 | 1·0 | 0·0 | | 1 : — : — | 3·0 | Scud. |
| | 12 | 105 | 26·9 | 26·3 | 0·6 | 1·1 | 0·5 | 0 | 1 : — : — | 10·0 | Id.; flakes of snow falling. |
| | 13 | 29·137 | 23·9 | 23·0 | 0·9 | 0·1 | 0·0 | | 1 : — : — | 7·0 | Scud. |
| | 14 | 144 | 19·5 | 18·9 | 0·6 | 0·2 | 0·1 | 28 | | 0·5 | Id. on E. horizon. |
| | 15 | 157 | 18·1 | 17·6 | 0·5 | 0·1 | 0·0 | 27 | | 0·0 | Clear. |
| | 16 | 157 | 17·5 | 17·2 | 0·3 | 0·0 | 0·0 | | | 0·0 | Id. |
| | 17 | 160 | 18·5 | 17·8 | 0·7 | 0·0 | 0·0 | | | 0·2 | Cirri to N.; no appearance of twilight. |
| | 18 | 165 | 14·0 | 13·9 | 0·1 | 0·0 | 0·0 | | | 0·5 | Scud to N. and E. |
| | 19 | 146 | 18·2 | 17·8 | 0·4 | 0·0 | 0·0 | 22 | 1 : — : — | 7·0 | Scud; woolly cirri; cumuli on horizon. |
| | 20 | 142 | 23·2 | 21·3 | 1·9 | 0·0 | 0·0 | 22 | | 9·0 | Id., cumuli, cir-cum-str., cirro-strati; clouds red. |
| | 21 | 145 | 27·2 | 25·2 | 2·0 | 0·0 | 0·0 | 21 | | 10·0 | Thick cirrous mass; beginning to snow. |
| | 22 | 099 | 32·0 | 28·0 | 4·0 | 0·0 | 0·0 | | | 10·0 | Id. |
| | 23 | 080 | 35·0 | 32·3 | 2·7 | 0·0 | 0·0 | 22 | 26 : — : 28 | 9·9 | Loose scud; woolly cirri, cirrous-haze; cirro-strati. |
| 27 | 0 | 059 | 36·9 | 34·9 | 2·0 | 0·2 | 0·2 | 28 | — : 31 : — | 9·0 | Woolly cirri and cirro-cumuli; scud. |
| | 1 | 053 | 37·3 | 34·2 | 3·1 | 0·4 | 0·4 | 28 | | 9·0 | Id. |
| | 2 | 046 | 39·2 | 35·7 | 3·5 | 0·3 | 0·3 | 26 | — : — : 28 | 8·0 | Woolly cirri; cum. and cum.-str. to E. and S.; cirri. |
| | 3 | 051 | 38·3 | 35·2 | 3·1 | 1·2 | 1·3 | 27 | | 9·0 | Id.; id. |
| | 4 | 051 | 38·4 | 35·1 | 3·3 | 2·3 | 0·9 | 25 | — : — : 28 | 8·0 | Id.; cum.-str., and cir.-str.; cirri; scud. |
| | 5 | 060 | 37·3 | 34·4 | 2·9 | 1·2 | 1·2 | 27 | — : — : 31 | 8·0 | Woolly cirri; linear cirri; scud, cum.-str., cir.-str. |
| | 6 | 079 | 36·2 | 33·5 | 2·7 | 1·2 | 1·1 | 23 | 27 : — : — | 10·0 | Scud; diffuse cirri over the sky. |
| | 7 | 088 | 35·8 | 33·0 | 2·8 | 1·2 | 0·3 | [illegible] | | 9·0 | As before; wind blowing in gusts. |
| | 8 | 108 | 35·5 | 33·3 | 2·2 | 1·0 | 0·6 | 23 | | 7·0 | Id.; stars dim; lunar corona. |
| | 9 | 103 | 34·8 | 32·9 | 1·9 | 0·0 | 0·1 | 23 | 28 : — : — | 4·0 | Scud; lunar corona. |
| | 10 | 130 | 35·7 | 33·7 | 2·0 | 0·4 | 0·2 | 28 | | 10·0 | Cirrous clouds; flakes of snow. |
| | 11 | 127 | 34·0 | 32·3 | 1·7 | 0·2 | 0·2 | 26 | | 7·0 | Cirro-strati and linear cirri over most of the sky. |
| | 12 | 130 | 34·2 | 32·4 | 1·8 | 0·8 | 0·3 | 26 | | 3·0 | Id. |
| | 13 | 29·144 | 34·9 | 32·7 | 2·2 | 0·7 | 0·2 | 27 | | 8·0 | The same, radiating from NNW.; lunar corona and halo. |
| | 14 | 147 | 35·6 | 32·8 | 2·8 | 1·2 | 0·3 | 27 | | 8·0 | Woolly and linear cirri. |
| | 15 | 165 | 33·2 | 32·2 | 1·0 | 0·2 | 0·0 | | | 0·5 | Detatched patches of cirro-strati. |
| | 16 | 172 | 32·5 | 31·4 | 1·1 | 0·2 | 0·0 | | | 0·1 | Cirri on NW. horizon. |
| | 17 | 174 | 31·6 | 30·5 | 1·1 | 0·0 | 0·0 | | | 0·0 | Stars not very distinct. |
| | 18 | 186 | 32·0 | 30·1 | 1·9 | 0·0 | 0·0 | | | 0·1 | Id.; cirro-strati on E. horizon. |
| | 19 | 188 | 32·7 | 30·7 | 2·0 | 0·0 | 0·1 | 22 | 26 : — : — | 7·0 | Scud; cumuli, cirri, strati on Cheviot; hazy. |
| | 20 | 206 | 33·4 | 31·6 | 1·8 | 0·1 | 0·1 | 21 | | 9·0 | As before. |
| | 21 | 208 | 35·5 | 33·0 | 2·5 | 0·0 | 0·0 | 22 | 28 : — : — | 9·0 | Scud, cum.; strati on Cheviot; cirri and cir.-haze. |

The direction of the wind is indicated by the number of the point of the compass, reckoning N. = 0, E. = 8, S. = 16, W. = 24. The motions of the three strata of clouds, Sc. (scud), C.-s. (cirro-stratus), and Cir. (cirrus), are indicated in a similar manner.

Feb. 26d 4h. The vane of the anemometer was found to be frozen up; the ice removed.

Feb. 27d 2h. The water in the cistern of the anemometer having become frozen, it was melted by pouring in hot water.

| Gött. Mean Time. | | Barometer at 32°. | Thermometers. | | | Wind. | | | Clouds, Sc. : C.-s. : Ci., moving from | Sky clouded. | Species of Clouds and Meteorological Remarks. |
|---|---|---|---|---|---|---|---|---|---|---|---|
| | | | Dry. | Wet. | Diff. | Maximum force in 1h. | Maximum force in 10m. | From | | | |
| d. | h. | in. | ° | ° | ° | lbs. | lbs. | pt. | pt. pt. pt. | 0—10. | |
| 27 | 22 | 29·206 | 37·8 | 35·7 | 2·1 | 0·1 | 0·1 | 21 | | 10·0 | Scud, cum.; strati on Cheviot; cirri and cir.-haze. |
| | 23 | 194 | 38·8 | 36·9 | 1·9 | 0·3 | 0·1 | 22 | | 10·0 | The same. |
| 28 | 0 | 204 | 38·9 | 36·9 | 2·0 | 0·2 | 0·2 | 20 | | 9·9 | Homogeneous clouds. |
| | 1 | 192 | 37·7 | 36·6 | 1·1 | 0·2 | 0·1 | 19 | | 10·0 | Snow. |
| | 2 | 156 | 40·0 | 37·6 | 2·4 | 0·0 | 0·2 | 20 | 21 : — : — | 9·8 | Scud; cirrous clouds. |
| | 3 | 129 | 41·9 | 39·2 | 2·7 | 0·0 | 0·0 | 20 | | 10·0 | Id.; id. |
| | 4 | 113 | 37·7 | 36·0 | 1·7 | 0·3 | 0·1 | 18 | 20 : — : — | 10·0 | Loose scud; cirrous clouds. |
| | 5 | 101 | 37·7 | 36·2 | 1·5 | 0·4 | 0·2 | 18 | 21 : — : — | 9·9 | Id.; id. |
| | 6 | 096 | 37·0 | 35·6 | 1·4 | 0·2 | 0·0 | 17 | 23 : — : — | 9·7 | Scud. |
| | 7 | 097 | 36·0 | 34·8 | 1·2 | 0·3 | 0·0 | 18 | 24 : — : — | 3·0 | Id. |
| | 8 | 104 | 36·2 | 35·1 | 1·1 | 0·1 | 0·0 | | 23 : — : — | 10·0 | Id. |
| | 9 | 111 | 35·4 | 34·6 | 0·8 | 0·0 | 0·0 | | | 10·0 | Id. |
| | 10 | 115 | 35·6 | 34·7 | 0·9 | 0·0 | 0·0 | 18 | | 10·0 | Id. |
| | 11 | 121 | 35·1 | 34·3 | 0·8 | 0·0 | 0·0 | | 25 : — : — | 9·5 | Id.; faint lunar halo. |
| | 12 | 130 | 35·3 | 34·8 | 0·5 | 0·0 | 0·0 | | 25 : — : — | 10·0 | Thick scud. |
| | 13 | 29·152 | 35·0 | 34·3 | 0·7 | 0·0 | 0·0 | | | 10·0 | Thick scud. |
| | 14 | 164 | 35·1 | 34·4 | 0·7 | 0·0 | 0·0 | | | 10·0 | Id. |
| | 15 | 185 | 36·0 | 34·4 | 1·6 | 0·0 | 0·0 | | | 10·0 | Dark. |
| | 16 | 203 | 36·0 | 34·3 | 1·7 | 0·0 | 0·0 | | | 10·0 | Id. |
| | 17 | 215 | 35·4 | 34·0 | 1·4 | 0·0 | 0·0 | | | 10·0 | Id. |
| | 18 | 227 | 35·2 | 33·7 | 1·5 | 0·0 | 0·0 | | | 10·0 | Id. |
| | 19 | 252 | 34·7 | 33·1 | 1·6 | 0·0 | 0·0 | 20 | | 10·0 | Nearly uniform mass of scud. |
| | 20 | 271 | 35·0 | 33·2 | 1·8 | 0·0 | 0·0 | | | 10·0 | Id. |
| | 21 | 283 | 35·7 | 34·0 | 1·7 | 0·0 | 0·0 | | | 10·0 | Id.; cirro-strati. |
| | 22 | 293 | 38·1 | 36·1 | 2·0 | 0·0 | 0·0 | | 28 : — : — | 10·0 | Id. |
| | 23 | 285 | 40·9 | 37·9 | 3·0 | 0·0 | 0·0 | | 30 : — : — | 9·9 | Id. |
| 29 | 0 | 287 | 41·6 | 37·9 | 3·7 | 0·0 | 0·0 | | | 9·9 | Scud, moving very slowly; probably two currents. |
| | 1 | 287 | 41·9 | 38·8 | 3·1 | 0·0 | 0·0 | | 20 : — : — | 9·8 | Id., id. |
| | 2 | 283 | 41·0 | 37·6 | 3·4 | 0·0 | 0·0 | | | 10·0 | Id., nearly homogeneous; hazy. |
| | 3 | 256 | 41·2 | 38·2 | 3·0 | 0·0 | 0·0 | | | 10·0 | Id., id. |
| | 4 | 229 | 39·1 | 36·6 | 2·5 | 0·0 | 0·0 | | 20 : — : — | 10·0 | Id.; cirrous clouds; solar halo at 4h 20m. |
| | 5 | 196 | 37·2 | 35·0 | 2·2 | 0·0 | 0·0 | | 18 : — : — | 10·0 | Id.; cirrous-haze. |
| | 6 | 166 | 35·2 | 33·7 | 1·5 | 0·0 | 0·0 | | | 10·0 | Id. |
| | 7 | 130 | 35·5 | 34·0 | 1·5 | 0·1 | 0·0 | 15 | | 10·0 | Id. |
| | 8 | 107 | 35·4 | 34·2 | 1·2 | 0·0 | 0·0 | | | 10·0 | Moon's disc faintly visible. |
| | 9 | 29·044 | 36·0 | 34·7 | 1·3 | 0·0 | 0·0 | | | 10·0 | Id. |
| | 10 | 28·981 | 36·9 | 35·3 | 1·6 | 0·1 | 0·3 | 13 | | 10·0 | Scud. |
| | 11 | 908 | 37·0 | 35·8 | 1·2 | 0·8 | 0·3 | 14 | | 10·0 | Light rain. |
| | 12 | 838 | 37·0 | 35·8 | 1·2 | 0·9 | 0·3 | 13 | | 10·0 | Id. |
| | 13 | 28·769 | 37·2 | 36·2 | 1·0 | 0·8 | 0·6 | 15 | | 10·0 | Smart rain. |
| | 14 | 719 | 38·2 | 36·7 | 1·5 | 2·2 | 1·0 | 16 | | 10·0 | Scud. |
| | 15 | 716 | 38·0 | 36·9 | 1·1 | 1·5 | 0·0 | 22 | | 10·0 | Id. more broken than before. |
| | 16 | 722 | 37·7 | 37·0 | 0·7 | 0·0 | 0·0 | 20 | 24 : — : — | 9·0 | Id. |
| | 17 | 741 | 39·4 | 37·7 | 1·7 | 0·3 | 0·2 | 19 | 24 : — : — | 1·0 | Id. |
| | 18 | 757 | 37·7 | 36·4 | 1·3 | 0·3 | 0·3 | 19 | 24 : — : — | 2·0 | Id. |
| | 19 | 782 | 38·2 | 36·8 | 1·4 | 0·3 | 0·1 | 18 | 24 : — : — | 9·0 | Id. |
| | 20 | 803 | 38·2 | 36·9 | 1·3 | 0·4 | 0·2 | 18 | 24 : — : — | 9·5 | Thick scud. |
| | 21 | 826 | 39·6 | 37·2 | 2·4 | 0·9 | 0·5 | 20 | 24 : — : — | 7·0 | Loose watery scud; patches of woolly cirri. |
| | 22 | 850 | 39·4 | 37·2 | 2·2 | 0·4 | 0·1 | 21 | 23 : — : — | 3·0 | Id.; id.; haze on hor. |
| | 23 | 859 | 40·0 | 37·3 | 2·7 | 1·5 | 1·4 | 20 | | 1·0 | Loose patches of scud; haze on E. horizon. |
| 1 | 0 | 879 | 40·3 | 37·0 | 3·3 | 1·6 | 1·2 | 20 | | 0·5 | Scud; linear cirri. |
| | 1 | 889 | 41·0 | 37·8 | 3·2 | 2·8 | 1·7 | 19 | | 1·0 | Patches of scud; cirro-cumulo-strati, cirro-strati, cirri. |
| | 2 | 909 | 41·7 | 38·0 | 3·7 | 2·0 | 1·7 | 20 | — : 23 : — | 8·0 | Cirro-cumulo-strati; cirri; cumuli. |
| | 3 | 895 | 42·9 | 39·2 | 3·7 | 2·7 | 2·7 | 20 | 23 : — : — | 5·0 | Thin scud; loose cumuli to S. |
| | 4 | 908 | 42·3 | 38·8 | 3·5 | 2·9 | 0·8 | 19 | — : — : 24 | 0·7 | Thin woolly cirri; ranges of cumuli on S. horizon. |
| | 5 | 916 | 40·7 | 37·9 | 2·8 | 3·8 | 1·7 | 20 | 21 : — : — | 7·5 | Scud; varieties of cirri over most of the sky. |

The direction of the wind is indicated by the number of the point of the compass, reckoning N. = 0, E. = 8, S. = 16, W. = 24. The motions of the three strata of clouds, Sc. (scud), C.-s. (cirro-stratus), and Cir. (cirrus), are indicated in a similar manner.

| Gött. Mean Time. | Barometer at 32°. | Thermometers. Dry. | Wet. | Diff. | Wind. Maximum force in 1h. | 10m. | From | Clouds, Sc. : C.-s. : Ci., moving from | Sky clouded. | Species of Clouds and Meteorological Remarks. |
|---|---|---|---|---|---|---|---|---|---|---|
| d. h. | in. | ° | ° | ° | lbs. | lbs. | pt. | pt. pt. pt. | 0—10. | |
| 1 6 | 28·909 | 40·3 | 38·0 | 2·3 | 1·8 | 0·5 | 20 | 21 : — : — | 9·7 | Scud; cirri and cirrous-haze. |
| 7 | 894 | 39·3 | 37·6 | 1·7 | 0·6 | 0·1 | 19 | 20 : — : — | 10·0 | Id.; cirrous-haze, &c. |
| 8 | 874 | 36·8 | 36·0 | 0·8 | 1·1 | 0·3 | 19 | | 10·0 | Rain. |
| 9 | 834 | 34·1 | 33·9 | 0·2 | 0·2 | 0·0 | | | 10·0 | Id. |
| 10 | 797 | 34·9 | 34·6 | 0·3 | 0·2 | 0·1 | 18 | | 10·0 | Id. |
| 11 | 810 | 35·6 | 35·0 | 0·6 | 0·4 | 0·2 | 20 | 23 : — : — | 6·0 | Loose scud, causing coloured lunar corona; sky milky. |
| 12 | 821 | 34·7 | 34·1 | 0·6 | 0·5 | 0·2 | 20 | | 7·0 | Cirro-cumulous-scud. |
| 13 | 28·830 | 34·7 | 34·0 | 0·7 | 0·6 | 0·5 | 20 | | 4·0 | Loose scud to E. |
| 14 | 845 | 34·6 | 33·7 | 0·9 | 1·5 | 0·6 | 20 | | 0·5 | Cirrous clouds. |
| 15 | 808 | 34·9 | 33·8 | 1·1 | 2·0 | 1·2 | 19 | | 0·1 | Cirro-strati on E. horizon. |
| 16 | 815 | 34·8 | 33·4 | 1·4 | 1·9 | 0·7 | 20 | | 0·2 | Woolly cirri and cirro-strati to W. |
| 17 | 835 | 34·7 | 32·7 | 2·0 | 0·8 | 0·5 | 22 | | 0·2 | Cirro-strati to W.; masses of scud. |
| 18 | 828 | 35·0 | 33·2 | 1·8 | 0·6 | 0·4 | 20 | | 0·2 | Id.; id. |
| 19 | 828 | 34·7 | 33·0 | 1·7 | 0·8 | 1·0 | 20 | 21 : — : — | 1·0 | Scud. |
| 20 | 826 | 35·3 | 33·6 | 1·7 | 1·8 | 0·9 | 19 | 21 : — : — | 1·5 | Id.; loose cumuli near Cheviot; patches of cirri. |
| 21 | 835 | 36·7 | 34·4 | 2·3 | 2·0 | 1·7 | 19 | | 1·5 | Id. |
| 22 | 839 | 38·2 | 35·3 | 2·9 | 4·0 | 1·7 | 20 | | 5·0 | Id. |
| 23 | 842 | 38·5 | 36·3 | 2·2 | 2·3 | 2·1 | 19 | | 5·0 | Id. |
| 2 0 | 846 | 40·2 | 37·5 | 2·7 | 3·0 | 1·7 | 20 | 21 : — : — | 1·5 | Id.; woolly cirri and cirrous-haze on horizon. |
| 1 | 858 | 40·7 | 38·6 | 2·1 | 2·2 | 0·7 | 20 | 21 : — : — | 5·0 | Id.; linear and mottled cirri. |
| 2 | 849 | 42·2 | 38·7 | 3·5 | 1·3 | 2·2 | 20 | | 5·0 | |
| 3 | 835 | 43·3 | 39·3 | 4·0 | 2·1 | 1·2 | 20 | — : — : 24 | 8·0 | Woolly cirri, moving slowly; patches of scud. |
| 4 | 827 | 39·5 | 37·8 | 1·7 | 1·8 | 0·4 | 20 | | 7·0 | A shower of rain since last observation. |
| 5 | 805 | 40·3 | 37·3 | 3·0 | 1·5 | 1·3 | 20 | | 5·0 | Scud, cumuli; woolly cirri, stationary. |
| 6 | 805 | 36·8 | 35·7 | 1·1 | 1·4 | 1·5 | 20 | | 1·2 | Loose scud, cumuli, woolly cir.-str.; shower lately. |
| 7 | 808 | 35·0 | 33·6 | 1·4 | 0·8 | 1·0 | 20 | 21 : — : — | 0·5 | Id., id. to S. and E.; passing showers. |
| 8 | 799 | 34·7 | 33·4 | 1·3 | 0·5 | 0·2 | 20 | | 0·5 | Id. |
| 9 | 781 | 35·6 | 33·9 | 1·7 | 1·3 | 0·7 | 20 | | 1·0 | Id.; thin woolly cirri. |
| 10 | 777 | 36·6 | 34·4 | 2·2 | 1·1 | 1·1 | 20 | | 6·0 | Scud, producing a coloured lunar corona. |
| 11 | 765 | 35·5 | 33·9 | 1·6 | 1·0 | 0·5 | 20 | | 3·5 | Patches of loose scud and cirri. |
| 12 | 752 | 36·9 | 34·5 | 2·4 | 1·1 | 1·0 | 20 | | 6·0 | Scud. |
| 3 0 | 28·648 | ... | ... | ... | 3·5 | 3·0 | 20 | | | |
| 13 | 29·041 | 37·6 | 35·3 | 2·3 | 4·8 | 0·0 | 28 | — : 30 : — | 6·5 | Cirro-cumulous-scud, moving quickly. |
| 14 | 071 | 35·0 | 33·3 | 1·7 | 0·0 | 0·0 | 28 | — : 30 : — | 1·0 | Id. |
| 15 | 092 | 34·0 | 32·4 | 1·6 | 0·0 | 0·0 | 28 | | 1·5 | Id. |
| 16 | 108 | 34·7 | 32·8 | 1·9 | 0·0 | 0·0 | 28 | | 0·5 | Id. |
| 17 | 123 | 32·1 | 31·2 | 0·9 | 0·0 | 0·0 | | | 2·0 | Id. |
| 18 | 134 | 34·3 | 32·5 | 1·8 | 0·0 | 0·0 | | | 8·5 | Id. |
| 19 | 140 | 33·9 | 32·0 | 1·9 | 0·1 | 0·0 | | | 3·0 | Scud, cumuli, cumulo-strati, cirro-cumuli, cirri. |
| 20 | 179 | 33·9 | 32·3 | 1·6 | 0·0 | 0·0 | | | 5·0 | Cum.-str., cir.-str.; varieties of cirri lying E. to W. |
| 21 | 195 | 36·8 | 34·9 | 1·9 | 0·1 | 0·3 | 30 | 2 : — : 22 | 7·0 | Cumuli; cirri and thin cir.-str. lying from WSW. to |
| 22 | 210 | 38·3 | 36·4 | 1·9 | 0·4 | 0·5 | | | 9·0 | As before; thick scud to N. and S. [ENE. |
| 23 | 236 | 39·7 | 38·0 | 1·7 | 0·7 | 0·6 | 31 | 2 : — : — | 10·0 | Scud; shower of rain. |
| 4 0 | 253 | 37·5 | 36·3 | 1·2 | 1·8 | 1·8 | 0 | 2 : — : — | 10·0 | Id.; light rain. |
| 1 | 280 | 36·5 | 35·2 | 1·3 | 2·9 | 2·5 | 31 | 2 : — : — | 10·0 | Id.; a few flakes of snow. |
| 2 | 281 | 37·5 | 34·0 | 3·5 | 3·1 | 3·0 | 0 | 2 : — : — | 10·0 | Id.; woolly cirri. |
| 3 | 309 | 37·5 | 34·2 | 3·3 | 3·5 | 2·1 | 1 | | 10·0 | Cirro-cumulous-scud; cirro-strati. |
| 4 | 341 | 36·5 | 34·4 | 2·1 | 2·5 | 1·0 | 1 | — : 2 : — | 10·0 | Cirro-strati; patches of scud. |
| 5 | 361 | 36·4 | 32·8 | 3·6 | 1·8 | 0·5 | 0 | | 10·0 | Thick uniform mass of cirro-strati; patches of scud. |
| 6 | 383 | 34·9 | 31·4 | 3·5 | 0·5 | 0·2 | 0 | — : 2 : 20 | 9·5 | Cir.-cum.-scud; diffuse and woolly cirri, moving slowly. |
| 7 | 395 | 33·7 | 31·1 | 2·6 | 0·7 | 0·2 | 1 | | 9·5 | As before; less cirro-cumulous-scud. |
| 8 | 400 | 34·4 | 32·9 | 1·5 | 0·4 | 0·2 | 31 | | 9·9 | Scud and cirro-strati; shower of hail. |
| 9 | 424 | 34·1 | 32·2 | 1·9 | 0·5 | 0·7 | 31 | | 8·5 | Id. |
| 10 | 452 | 32·9 | 31·2 | 1·7 | 1·1 | 1·2 | 30 | 3 : — : 20 | 6·0 | Scud; cirri. |
| 11 | 482 | 31·9 | 29·8 | 2·1 | 1·5 | 0·8 | 30 | — : 24 : — | 3·0 | Cir.-cum.-str.; cumuli to NE.; coloured lunar corona. |
| 12 | 501 | 30·9 | 29·6 | 1·3 | 1·0 | 0·5 | 30 | | 0·1 | Light cirri. |

The direction of the wind is indicated by the number of the point of the compass, reckoning N. = 0, E. = 8, S. = 16, W. = 24. The motions of the three strata of clouds, Sc. (scud), C.-s. (cirro-stratus), and Cir. (cirrus), are indicated in a similar manner.

| Gött. Mean Time. | Barometer at 32°. | Thermometers. Dry. | Wet. | Diff. | Wind. Maximum force in 1h. | 10m. | From | Clouds, Sc. : C.-s. : Ci., moving from | Sky clouded. | Species of Clouds and Meteorological Remarks. |
|---|---|---|---|---|---|---|---|---|---|---|
| d. h. | in. | ° | ° | ° | lbs. | lbs. | pt. | pt. pt. pt. | 0—10. | |
| 4 13 | 29·518 | 28·5 | 27·0 | 1·5 | 0·2 | 0·0 | | | 0·0 | Clear. |
| 14 | 523 | 27·9 | 26·8 | 1·1 | 0·0 | 0·0 | | | 0·0 | Id. |
| 15 | 530 | 27·2 | 25·9 | 1·3 | 0·0 | 0·0 | | | 0·1 | Patches of cirro-strati on horizon. |
| 16 | 533 | 27·7 | 25·5 | 2·2 | 0·2 | 0·1 | 28 | 0 : — : — | 0·2 | Masses of scud; cirro-strati on horizon. |
| 17 | 541 | 27·0 | 25·0 | 2·0 | 0·2 | 0·0 | | | 0·1 | Scud and cirro-strati. |
| 18 | 554 | 25·8 | 24·2 | 1·6 | 0·0 | 0·0 | | | 0·1 | Clear; patches of cumuli on E. horizon.* |
| 19 | 559 | 24·8 | 23·9 | 0·9 | 0·0 | 0·0 | 20 | | 0·2 | Cumuli on E. horizon. |
| 20 | 566 | 25·4 | 24·7 | 0·7 | 0·0 | 0·0 | | | 0·2 | Id.; hazy to E. |
| 21 | 567 | 28·3 | 26·7 | 1·6 | 0·0 | 0·0 | 20 | | 0·2 | Id.; id. |
| 22 | 570 | 31·9 | 29·0 | 2·9 | 0·0 | 0·0 | | 0 : — : — | 0·2 | Cirro-stratous-scud; cirro-strati and haze to E. |
| 23 | 566 | 34·2 | 31·1 | 3·1 | 0·5 | 0·5 | 27 | — : — : 30 | 0·5 | Woolly cirri; cumuli to E. |
| 5 0 | 565 | 35·8 | 32·4 | 3·4 | 0·5 | 0·6 | 27 | 24 : — : — | 0·7 | Patches of scud; woolly cirri. |
| 1 | 561 | 36·2 | 32·3 | 3·9 | 0·6 | 0·6 | 28 | 28 : — : — | 2·0 | Loose cumuli; cum., cir.-str., and haze to E. and N. |
| 2 | 552 | 35·2 | 32·3 | 2·9 | 0·6 | 0·4 | 28 | | 2·0 | Cumuli and cumulo-strati on horizon. |
| 3 | 545 | 37·3 | 32·4 | 4·9 | 0·6 | 0·2 | 28 | 28 : — : — | 3·5 | Id. |
| 4 | 533 | 38·9 | 33·5 | 5·4 | 0·6 | 0·3 | 28 | 28 : 29 : — | 8·7 | Scud; cumuli. |
| 5 | 529 | 37·5 | 32·4 | 5·1 | 0·5 | 0·2 | 28 | 28 : 29 : — | 9·5 | Id.; id.; cirro-cumulous clouds. |
| 6 | 524 | 35·7 | 32·0 | 3·7 | 0·3 | 0·0 | | | 7·5 | Id.; id. |
| 7 | 523 | 34·0 | 31·0 | 3·0 | 0·0 | 0·0 | | | 8·0 | Id.; id. |
| 8 | 525 | 33·7 | 31·4 | 2·3 | 0·0 | 0·0 | | | 9·0 | Id. |
| 9 | 529 | 31·0 | 29·9 | 1·0 | 0·0 | 0·0 | | | 2·5 | Cirro-cumulous-scud. |
| 10 | 530 | 31·4 | 29·6 | 1·8 | 0·0 | 0·0 | | | 6·0 | Id. |
| 11 | 531 | 32·0 | 30·0 | 2·0 | 0·0 | 0·0 | | | 8·0 | Id. |
| 12 | 531 | 32·3 | 30·0 | 2·3 | 0·0 | 0·1 | 29 | 28 : — : — | 10·0 | Scud; cirro-cumulo-strati. |
| 13 | 29·526 | 32·0 | 30·0 | 2·0 | 0·0 | 0·0 | | — : 30 : — | 5·0 | Thin cirro-strati; cirro-cumulo-strati. |
| 14 | 523 | 30·8 | 28·2 | 2·6 | 0·0 | 0·0 | | — : 1 : — | 6·0 | Thick cir.-str.-scud; cir.-cum.-str.; lunar corona. |
| 15 | 524 | 31·7 | 29·0 | 2·7 | 0·0 | 0·0 | | | 7·0 | Thick clouds to S.; sky to N. |
| 16 | 527 | 31·3 | 28·9 | 2·4 | 0·3 | 0·2 | 28 | | 8·0 | Id. |
| 17 | 545 | 30·7 | 28·4 | 2·3 | 0·2 | 0·3 | 28 | 0 : — : — | 6·0 | Thick cirro-cumulous-scud. |
| 18 | 552 | 28·9 | 27·0 | 1·9 | 0·3 | 0·2 | 28 | | 0·0 | Clear. |
| 19 | 572 | 28·4 | 27·0 | 1·4 | 0·2 | 0·1 | 28 | | 0·2 | Scud and loose cumuli; linear cirri to E. |
| 20 | 602 | 28·7 | 27·3 | 1·4 | 0·2 | 0·1 | | | 0·1 | Id.; id. |
| 21 | 618 | 31·1 | 28·9 | 2·2 | 0·1 | 0·1 | 28 | | 0·2 | Id.; id. |
| 22 | 634 | 33·6 | 31·2 | 2·4 | 0·4 | 0·4 | 28 | | 0·5 | Id.; cirro-strati to E. |
| 23 | 665 | 35·0 | 32·4 | 2·6 | 0·6 | 0·1 | 31 | — : 3 : — | 6·5 | Cirro-cumulo-strati; id. |
| 6 0 | 677 | 36·8 | 32·9 | 3·9 | 0·6 | 0·6 | 31 | 1 : 1 : — | 3·5 | Scud and loose cumuli; thin woolly cir.-cum. |
| 1 | 701 | 37·3 | 33·5 | 3·8 | 0·7 | 0·3 | 31 | 0 : 0 : — | 7·0 | Id.; id. |
| 2 | 709 | 36·4 | 32·9 | 3·5 | 1·9 | 2·1 | 0 | 0 : 0 : — | 3·0 | Id.; id. |
| 3 | 728 | 37·7 | 33·3 | 4·4 | 2·5 | 2·3 | 0 | | 3·5 | Id.; id. |
| 4 | 749 | 36·1 | 32·1 | 4·0 | 1·4 | 0·9 | 0 | | 2·0 | Id.; id. |
| 5 | 766 | 35·9 | 32·2 | 3·7 | 1·4 | 0·8 | 0 | | 9·7 | Id.; id.; shower of hail. |
| 6 | 797 | 34·3 | 31·9 | 2·4 | 0·8 | 0·1 | 30 | | 9·5 | Thick heavy cirro-stratous-scud. |
| 7 | 806 | 34·1 | 30·9 | 3·2 | 1·3 | 0·2 | 30 | | 9·5 | Id. |
| 8 | 830 | 33·9 | 31·5 | 2·4 | 0·5 | 0·2 | 31 | | 9·7 | Dark. |
| 9 | 842 | 33·2 | 31·5 | 1·7 | 1·0 | 0·0 | 29 | | 3·0 | Masses of scud. |
| 10 | 853 | 33·5 | 30·5 | 3·0 | 0·4 | 0·2 | 30 | | 9·5 | Scud. |
| 11 | 877 | 33·7 | 30·9 | 2·8 | 0·3 | 0·1 | 30 | | 10·0 | Id. |
| 12 | 884 | 33·5 | 31·2 | 2·3 | 0·3 | 0·1 | 30 | | 9·9 | Id. |
| 13 | 29·890 | 32·9 | 31·2 | 1·7 | 0·2 | 0·2 | 29 | 0 : — : — | 9·7 | Cirro-cumulous-scud. |
| 14 | 902 | 32·7 | 30·5 | 2·2 | 0·2 | 0·0 | 29 | 0 : — : — | 9·9 | Id. |
| 15 | 910 | 32·1 | 30·5 | 1·6 | 0·0 | 0·0 | 28 | 0 : — : — | 9·9 | Id. |
| 16 | 920 | 32·3 | 30·1 | 2·2 | 0·0 | 0·0 | 28 | 0 : — : — | 9·9 | Id. |
| 17 | 934 | 32·7 | 30·7 | 2·0 | 0·0 | 0·0 | 28 | | 10·0 | Scud. |
| 18 | 946 | 32·3 | 30·7 | 1·6 | 0·0 | 0·0 | 28 | | 10·0 | Id. |
| 19 | 950 | 32·3 | 30·0 | 2·3 | 0·0 | 0·0 | | 10 : — : — | 10·0 | Id. |
| 20 | 969 | 32·5 | 30·7 | 1·8 | 0·2 | 0·0 | | | 10·0 | Id. |

The direction of the wind is indicated by the number of the point of the compass, reckoning N. = 0, E. = 8, S. = 16, W. = 24. The motions of the three strata of clouds, Sc. (scud), C.-s. (cirro-stratus), and Cir. (cirrus), are indicated in a similar manner.

* See additional meteorological notes after the *Hourly Meteorological Observations*.

| Gött. Mean Time. | Barometer at 32°. | Thermometers. Dry. | Wet. | Diff. | Wind. Maximum force in 1h. | 10m. | From | Clouds, Sc. : C.-s. : Ci., moving from | Sky clouded. | Species of Clouds and Meteorological Remarks. |
|---|---|---|---|---|---|---|---|---|---|---|
| d. h. | in. | ° | ° | ° | lbs. | lbs. | pt. | pt. pt. pt. | 0—10. | |
| 6 21 | 29·971 | 33·8 | 32·0 | 1·8 | 0·1 | 0·0 | | 2 : — : — | 10·0 | Scud. |
| 22 | 29·990 | 35·1 | 32·0 | 3·1 | 0·1 | 0·1 | 28 | 2 : — : — | 10·0 | Id. |
| 23 | 29·999 | 36·3 | 34·2 | 2·1 | 0·1 | 0·1 | 30 | | 10·0 | Id. |
| 7 0 | 30·013 | 37·7 | 33·3 | 4·4 | 0·1 | 0·0 | 29 | 1 : — : — | 9·9 | Id. |
| 1 | 012 | 38·4 | 34·0 | 4·4 | 0·1 | 0·0 | 30 | 2 : — : — | 9·5 | Thin scud ; linear cirri. |
| 2 | 011 | 38·4 | 33·7 | 4·7 | 0·0 | 0·0 | 31 | 2 : — : — | 6·0 | Masses of scud and loose cumuli ; cirri. |
| 3 | 006 | 39·0 | 34·4 | 4·6 | 0·0 | 0·0 | | | 8·0 | Id. |
| 4 | 000 | 38·3 | 34·0 | 4·3 | 0·0 | 0·0 | | | 8·0 | Id. |
| 5 | 004 | 38·8 | 34·3 | 4·5 | 0·0 | 0·0 | | | 5·0 | Id. |
| 6 | 014 | 34·5 | 31·5 | 3·0 | 0·0 | 0·0 | | 22 : — : — | 4·0 | Cirro-cumulous scud ; thick scud to E. ; cirri. |
| 7 | 027 | 31·0 | 29·2 | 1·8 | 0·0 | 0·0 | | | 3·0 | Scud, cirri, cirro-cumuli, and haze. |
| 8 | 025 | 28·9 | 27·8 | 1·1 | 0·0 | 0·0 | | | 1·0 | Id., id., id. |
| 9 | 029 | 27·3 | 27·0 | 0·3 | 0·0 | 0·0 | | | 0·5 | Cirro-strati to NNE. ; aurora. |
| 10 | 028 | 26·9 | 26·8 | 0·1 | 0·0 | 0·0 | | | 1·5 | Cirro-strati, radiating from N. ; aurora. |
| 11 | 023 | 28·4 | 28·0 | 0·4 | 0·0 | 0·0 | | | 6·0 | Cirrous clouds and haze over the sky. |
| 12 | 023 | 30·2 | 28·9 | 1·3 | 0·0 | 0·0 | | | 10·0 | Cirrous clouds. |
| 13 | 30·011 | 31·1 | 29·6 | 1·5 | 0·0 | 0·0 | | | 10·0 | Densely covered with clouds. |
| 14 | 30·002 | 31·6 | 29·8 | 1·8 | 0·0 | 0·0 | | | 9·8 | Cirro-strati and cirrous haze ; lunar halo. |
| 15 | 29·991 | 31·5 | 29·8 | 1·7 | 0·0 | 0·0 | 18 | | 10·0 | Id. |
| 16 | 969 | 32·0 | 30·1 | 1·9 | 0·0 | 0·0 | | | 10·0 | Id. |
| 17 | 945 | 33·2 | 31·0 | 2·2 | 0·0 | 0·0 | 17 | | 10·0 | Dense clouds. |
| 18 | 946 | 33·7 | 31·6 | 2·1 | 0·0 | 0·0 | 18 | | 10·0 | Id. ; slight shower of snow at 18½h. |
| 19 | 928 | 32·9 | 30·4 | 2·5 | 0·4 | 0·1 | 18 | | 10·0 | Slight shower of snow. |
| 20 | 929 | 32·2 | 31·8 | 0·4 | 0·2 | 0·1 | 18 | | 10·0 | Id. |
| 21 | 906 | 32·8 | 32·0 | 0·8 | 0·1 | 0·1 | 17 | | 10·0 | Id. |
| 22 | 887 | 34·2 | 32·6 | 1·6 | 0·1 | 0·1 | 18 | | 10·0 | Id. |
| 23 | 807 | 35·8 | 34·6 | 1·2 | 0·3 | 0·2 | 18 | | 10·0 | Sleet. |
| 8 0 | 828 | 36·3 | 34·1 | 2·2 | 0·6 | 0·5 | 18 | 20 : — : — | 10·0 | Scud ; cir.-str., nearly homogeneous ; shower of hail. |
| 1 | 806 | 35·3 | 34·3 | 1·0 | 0·9 | 1·1 | 18 | 20 : — : — | 10·0 | Id. ; sleet. |
| 2 | 768 | 35·9 | 34·7 | 1·2 | 2·3 | 1·4 | 19 | 19 : — : — | 10·0 | Id. ; rain. |
| 3 | 752 | 36·1 | 35·7 | 0·4 | 1·3 | 0·3 | 20 | 19 : — : — | 10·0 | Id. ; cirrous clouds ; rain. |
| 4 | 722 | 36·3 | 36·0 | 0·3 | 2·1 | 0·6 | 19 | | 10·0 | Id. |
| 5 | 701 | 37·1 | 36·2 | 0·9 | 1·6 | 0·6 | 20 | | 10·0 | Id. |
| 6 | 674 | 38·0 | 37·0 | 1·0 | 1·2 | 1·2 | 19 | | 10·0 | Id. |
| 7 | 660 | 38·4 | 37·3 | 1·1 | 3·1 | 1·3 | 20 | | 10·0 | |
| 8 | 650 | 38·8 | 37·9 | 0·9 | 2·7 | 0·1 | 20 | | 9·9 | Scud ; a few stars visible. |
| 9 | 617 | 40·7 | 39·9 | 0·8 | 0·5 | 0·1 | 20 | | 9·9 | Id. ; id. |
| 10 | 580 | 40·0 | 39·1 | 0·9 | 0·8 | 2·0 | 20 | | 9·8 | Light rain. |
| 11 | 552 | 39·5 | 38·9 | 0·6 | 1·9 | 1·2 | 20 | | 10·0 | Id. |
| 12 | 513 | 41·3 | 40·4 | 0·9 | 1·3 | 0·5 | 22 | | 10·0 | Id. ; very dark. |
| 13 | 29·496 | 43·9 | 42·3 | 1·6 | 0·2 | 0·1 | 21 | | 10·0 | Dark. |
| 14 | 480 | 44·8 | 44·0 | 0·8 | 1·3 | 0·0 | | | 10·0 | Rather light to E. and NE. |
| 15 | 422 | 46·2 | 45·3 | 0·9 | 0·7 | 0·9 | 20 | | 10·0 | Light rain. |
| 16 | 396 | 46·2 | 45·3 | 0·9 | 2·1 | 1·5 | 19 | | 10·0 | Dark. |
| 17 | 386 | 47·0 | 46·1 | 0·9 | 2·2 | 0·6 | 19 | | 10·0 | |
| 18 | 382 | 47·8 | 45·9 | 1·9 | 1·5 | 0·7 | 20 | 23 : — : — | 10·0 | Thick scud. |
| 19 | 374 | 46·7 | 44·9 | 1·8 | 1·6 | 0·6 | 21 | 22 : — : — | 10·0 | Patches of loose scud ; cirro-strati and cirri. |
| 20 | 328 | 45·9 | 44·3 | 1·6 | 2·3 | 3·9 | 19 | | 10·0 | Patches of scud ; cirro-strati. |
| 21 | 275 | 47·9 | 45·4 | 2·5 | 4·3 | 5·0 | 19 | 21 : — : 23 | 10·0 | Scud ; fibrous woolly cirri moving slowly. |
| 22 | 270 | 48·1 | 45·1 | 3·0 | 5·4 | 4·9 | 20 | 22 : — : — | 10·0 | Id. ; woolly cirri and cirrous haze. |
| 23 | 245 | 46·3 | 43·6 | 2·7 | 6·9 | 3·7 | 20 | 22 : — : — | 10·0 | Id. ; light rain. |
| 9 0 | 200 | 47·3 | 44·6 | 2·7 | 5·4 | 6·2 | 20 | 23 : — : — | 10·0 | Scud. |
| 1 | 157 | 47·1 | 44·2 | 2·9 | 7·6 | 6·3 | 21 | 23 : — : 25 | 9·9 | Id. ; woolly cirri, moving rapidly. |
| 2 | 168 | 48·4 | 44·9 | 3·5 | 8·0 | 9·0 | 24 | 25 : — : — | 9·9 | Id. |
| 3 | 248 | 48·1 | 43·7 | 4·4 | 9·3 | 7·8 | 27 | 27 : — : 27 | 8·5 | Id. ; woolly cirri ; cirro-strati. |
| 4 | 361 | 48·5 | 44·0 | 4·5 | 7·7 | 5·0 | 27 | — : 28 : — | 5·0 | Cirro-cumulo-strati. |

The direction of the wind is indicated by the number of the point of the compass, reckoning N. = 0, E. = 8, S. = 16, W. = 24. The motions of the three strata of clouds, Sc. (scud), C.-s. (cirro-stratus), and Cir. (cirrus), are indicated in a similar manner.

| Gött. Mean Time. | | Barometer at 32°. | Thermometers. Dry. | Wet. | Diff. | Wind. Maximum force in 1h. | 10m. | From | Clouds, Sc. : C.-s. : Ci., moving from | Sky clouded. | Species of Clouds and Meteorological Remarks. |
|---|---|---|---|---|---|---|---|---|---|---|---|
| d. | h. | in. | ° | ° | ° | lbs. | lbs. | pt. | pt. pt. pt. | 0—10. | |
| 9 | 5 | 29·433 | 48·4 | 43·0 | 5·4 | 5·6 | 4·2 | 28 | | 2·0 | Masses of scud; cirro-cumulo-strati; cir.-str. on hor. |
| | 6 | 487 | 44·7 | 40·9 | 3·8 | 4·1 | 2·0 | 27 | | 1·5 | Patches of scud, cumuli, cirro-strati, and haze. |
| | 7 | 498 | 42·8 | 39·7 | 3·1 | 2·9 | 1·3 | 25 | | 0·9 | Id. |
| | 8 | 551 | 41·3 | 38·3 | 3·0 | 0·9 | 0·8 | 28 | | 0·9 | Id. |
| | 9 | 577 | 40·6 | 38·1 | 2·5 | 1·1 | 0·0 | | | 0·0 | Clear. |
| | 10 | 574 | 38·5 | 36·8 | 1·7 | 0·1 | 0·1 | 20 | | 3·0 | Thick clouds on horizon. |
| | 11 | 561 | 40·9 | 38·7 | 2·2 | 0·5 | 0·2 | 20 | | 3·0 | Scud and cirrous haze to N.; stars dim. |
| | 12 | 566 | 39·7 | 37·8 | 1·9 | 0·5 | 0·0 | 20 | | 2·0 | Id. |
| 10 | 0 | ..... | ... | ... | ... | 1·0 | ... | | | | |
| | 13 | 29·232 | 41·3 | 39·9 | 1·4 | 3·8 | 1·5 | 20 | | 10·0 | Thick scud. |
| | 14 | 209 | 43·0 | 41·9 | 1·1 | 1·2 | 0·8 | 20 | | 10·0 | Light rain. |
| | 15 | 192 | 44·1 | 42·6 | 1·5 | 0·8 | 0·4 | 20 | | 9·7 | A few stars indistinctly visible. |
| | 16 | 163 | 44·0 | 42·0 | 2·0 | 0·8 | 0·3 | 21 | | 4·0 | Scud. |
| | 17 | 146 | 42·9 | 40·6 | 2·3 | 0·8 | 0·3 | 20 | | 3·0 | Id.; cirrous clouds; lunar corona. |
| | 18 | 104 | 43·1 | 41·5 | 1·6 | 0·3 | 0·0 | | | 10·0 | Id.; very light rain. |
| | 19 | 053 | 42·9 | 41·3 | 1·6 | 0·5 | 0·4 | 20 | 24 : — : — | 10·0 | Id.; id.; cirrous clouds. |
| | 20 | 29·007 | 42·7 | 41·1 | 1·6 | 0·5 | 0·4 | 20 | 24 : — : — | 10·0 | Id.; id.; id. |
| | 21 | 28·973 | 42·9 | 42·0 | 0·9 | 0·4 | 0·3 | 20 | 24 : — : — | 10·0 | Id. |
| | 22 | 936 | 44·5 | 42·3 | 2·2 | 0·4 | 0·6 | 20 | 24 : — : — | 10·0 | Id.; cirrous clouds. |
| | 23 | 928 | 45·7 | 43·1 | 2·6 | 1·1 | 1·0 | 23 | 25 : — : — | 9·9 | Id.; woolly cirri. |
| 11 | 0 | 931 | 46·2 | 43·2 | 3·0 | 0·7 | 0·5 | 24 | 25 : — : — | 9·2 | Id.; woolly and linear cirri. |
| | 1 | 905 | 46·9 | 43·0 | 3·9 | 2·2 | 2·2 | 24 | | 7·0 | Id. |
| | 2 | 900 | 46·2 | 42·0 | 4·2 | 2·6 | 5·0 | 22 | 26 : — : — | 5·0 | Id.; woolly cirri. |
| | 3 | 913 | 40·0 | 38·5 | 1·5 | 4·9 | 1·2 | 23 | 24 : — : 24 | 5·0 | Id.; id.; showers of rain and hail. |
| | 4 | 921 | 40·3 | 38·0 | 2·3 | 5·5 | 3·9 | 24 | | 9·5 | Scud and loose cumuli; cirri; rain. |
| | 5 | 877 | 39·7 | 36·3 | 3·4 | 2·2 | 1·5 | 25 | — : — : 24 | 3·5 | Woolly cirri; scud and cumuli on horizon. |
| | 6 | 902 | 36·7 | 34·9 | 1·8 | 4·2 | 2·1 | 25 | — : — : 28 | 3·0 | Watery woolly cirri; cum. and nimb.; shower of sleet. |
| | 7 | 918 | 35·7 | 33·6 | 2·1 | 1·9 | 1·4 | 26 | 26 : — : — | 0·7 | Masses of scud. |
| | 8 | 938 | 35·7 | 33·0 | 2·7 | 1·3 | 1·8 | 22 | | 1·0 | Thin clouds; a few flakes of snow. |
| | 9 | 917 | 33·4 | 32·3 | 1·1 | 2·3 | 1·6 | 22 | | 4·0 | Thin scud. |
| | 10 | 921 | 33·6 | 30·8 | 2·8 | 0·8 | 0·8 | 22 | | 1·0 | Id. on horizon. |
| | 11 | 919 | 33·6 | 31·0 | 2·6 | 2·5 | 2·2 | 24 | | 3·0 | Clouds on horizon. |
| | 12 | 932 | 33·6 | 31·3 | 2·3 | 1·6 | 1·0 | 24 | | 3·0 | Scud; stars dimly visible. |
| | 13 | 28·934 | 31·9 | 29·2 | 2·7 | 1·2 | 0·8 | 23 | | 3·0 | Scud; stars brighter. |
| | 14 | 951 | 33·7 | 31·0 | 2·7 | 1·0 | 1·7 | 24 | | 2·0 | Patches of scud. |
| | 15 | 959 | 32·0 | 30·9 | 1·1 | 1·9 | 0·6 | 25 | | 2·0 | Id.; thick clouds to N. |
| | 16 | 976 | 32·5 | 31·0 | 1·5 | 1·1 | 1·5 | 24 | | 1·5 | Clouds to E. |
| | 17 | 988 | 33·2 | 31·2 | 2·0 | 1·0 | 1·3 | 23 | | 2·0 | Id. to E. and SE. |
| | 18 | 979 | 33·0 | 32·2 | 0·8 | 0·9 | 0·7 | 22 | 26 : — : — | 2·0 | Thin scud; scud on horizon and on Cheviot. |
| | 19 | 967 | 33·4 | 31·1 | 2·3 | 2·3 | 0·2 | 22 | 26 : — : — | 8·5 | Scud; cirrous clouds; cirro-strati on E. horizon. |
| | 20 | 946 | 33·0 | 32·0 | 1·0 | 0·3 | 0·0 | | | 10·0 | Shower of snow. |
| | 21 | 28·973 | 33·0 | 32·3 | 0·7 | 0·5 | 1·1 | 28 | 27 : — : 28 | 5·0 | Scud moving quickly; woolly cirri; snow showers. |
| | 22 | 29·001 | 34·6 | 32·3 | 2·3 | 2·7 | 2·3 | 26 | — : — : 30 | 2·5 | Woolly cirri; scud to SE. |
| | 23 | 037 | 36·7 | 33·1 | 3·6 | 1·8 | 0·8 | 26 | | 3·0 | Id.; cirrous haze; cirro-strati. |
| 12 | 0 | 057 | 38·0 | 35·0 | 3·0 | 1·0 | 0·2 | 26 | | 10·0 | Nearly homogeneous cirrous clouds and haze; scud to S. |
| | 1 | 097 | 34·9 | 34·2 | 0·7 | 0·7 | 0·5 | 28 | 28 : — : 28 | 8·0 | Scud in patches; cirri; occasional showers of snow. |
| | 2 | 144 | 37·0 | 34·2 | 2·8 | 1·4 | 2·8 | 30 | 30 : 28 : — | 3·5 | Patches of scud; cir.-str. and haze; cum. on N. hor. |
| | 3 | 205 | 39·5 | 35·6 | 3·9 | 2·3 | 2·5 | 30 | 30 : — : — | 9·7 | Scud; cirrous clouds. |
| | 4 | 265 | 41·3 | 36·0 | 5·3 | 2·3 | 1·3 | 29 | — : 28 : — | 7·0 | Cirro-stratous scud; patches of scud. |
| | 5 | 302 | 38·8 | 34·8 | 4·0 | 2·3 | 1·7 | | | 2·0 | Masses of scud and loose cumuli round horizon. |
| | 6 | 349 | 38·3 | 35·3 | 3·0 | 1·9 | 1·2 | 28 | 29 : — : — | 8·0 | Scud. |
| | 7 | 414 | 38·0 | 34·6 | 3·4 | 3·6 | 3·8 | 30 | 30 : — : — | 5·0 | Id. |
| | 8 | 452 | 37·0 | 34·2 | 2·8 | 1·9 | 1·8 | 30 | | 2·0 | Clouds on E. and S. horizon. |
| | 9 | 495 | 34·9 | 31·9 | 3·0 | 1·9 | 0·7 | 29 | | 2·0 | Id. |
| | 10 | 543 | 33·5 | 30·9 | 2·6 | 0·4 | 0·0 | | | 0·9 | Id. |

The direction of the wind is indicated by the number of the point of the compass, reckoning N. = 0, E. = 8, S. = 16, W. = 24. The motions of the three strata of clouds, Sc. (scud), C.-s. (cirro-stratus), and Cir. (cirrus), are indicated in a similar manner.

| Gött. Mean Time. | | Barometer at 32°. | Thermometers. | | | Wind. | | | Clouds, Sc.: C.-s.: Ci., moving from | Sky clouded. | Species of Clouds and Meteorological Remarks. |
|---|---|---|---|---|---|---|---|---|---|---|---|
| | | | Dry. | Wet. | Diff. | Maximum force in 1h. | Maximum force in 10m. | From | | | |
| d. | h. | in. | ° | ° | ° | lbs. | lbs. | pt. | pt. pt. pt. | 0—10. | |
| 12 | 11 | 29·577 | 32·7 | 31·0 | 1·7 | 0·0 | 0·0 | | | 0·1 | Thin clouds; faint auroral light. |
| | 12 | 593 | 29·2 | 28·0 | 1·2 | 0·0 | 0·0 | | | 0·1 | Patches of cirrous clouds to E. |
| | 13 | 29·602 | 30·3 | 28·4 | 1·9 | 0·0 | 0·0 | | | 0·5 | Patches of cirrous clouds to N. and W. |
| | 14 | 607 | 30·3 | 29·0 | 1·3 | 0·0 | 0·0 | | | 1·5 | Id., chiefly to NE. |
| | 15 | 611 | 31·3 | 29·9 | 1·4 | 0·0 | 0·0 | 23 | | 1·7 | Id. |
| | 16 | 617 | 30·4 | 29·2 | 1·2 | 0·2 | 0·0 | 21 | | 0·5 | Id. |
| | 17 | 622 | 29·3 | 28·5 | 0·8 | 0·0 | 0·0 | | | 0·2 | Id. |
| | 18 | 633 | 29·2 | 28·0 | 1·2 | 0·0 | 0·0 | | | 0·2 | Cirro-strati on E. horizon. |
| | 19 | 663 | 28·5 | 27·9 | 0·6 | 0·0 | 0·0 | | | 1·0 | Cumuli, cirro-strati and patches of scud. |
| | 20 | 648 | 31·0 | 29·9 | 1·1 | 0·0 | 0·0 | | | 0·5 | Cirro-strati; scud on Cheviot; haze on E. horizon. |
| | 21 | 667 | 34·9 | 32·2 | 2·7 | 0·0 | 0·0 | 17 | | 0·2 | Cirro-strati to E. |
| | 22 | 673 | 37·7 | 33·6 | 4·1 | 0·6 | 0·4 | 28 | | 0·2 | Id. |
| | 23 | 686 | 39·3 | 34·5 | 4·8 | 1·3 | 1·1 | 28 | 29 : — : — | 4·0 | Scud; loose cumuli, cirro-strati, and cirri. |
| 13 | 0 | 687 | 39·8 | 35·0 | 4·8 | 1·3 | 1·5 | 29 | | 2·0 | Masses of cumuli on horizon; patches of scud. |
| | 1 | 706 | 40·1 | 34·9 | 5·2 | 1·7 | 0·9 | 29 | 30 : — : — | 2·0 | Scud; masses of cumuli on horizon. |
| | 2 | 708 | 39·2 | 34·2 | 5·0 | 1·3 | 0·4 | 30 | 30 : — : — | 6·0 | Scud and cumuli. |
| | 3 | 710 | 40·2 | 35·3 | 4·9 | 0·5 | 0·2 | 30 | | 6·5 | Id. |
| | 4 | 708 | 41·3 | 36·7 | 4·6 | 0·4 | 0·1 | 29 | 29 : — : — | 6·5 | Id. |
| | 5 | 709 | 37·8 | 33·9 | 3·9 | 0·1 | 0·0 | 30 | | 4·0 | Id.; cirro-strati to E. |
| | 6 | 710 | 38·2 | 34·0 | 4·2 | 0·0 | 0·0 | | 28 : — : — | 3·0 | Loose cumuli and cumulo-strati; cirro-strati; scud. |
| | 7 | 712 | 35·9 | 31·9 | 4·0 | 0·0 | 0·0 | 30 | 28 : 28 : — | 2·5 | Scud and cirro-strati; sky hazy; red to E. |
| | 8 | 712 | 37·0 | 32·3 | 4·7 | 0·0 | 0·0 | | | 8·5 | Scud. |
| | 9 | 710 | 36·2 | 32·2 | 4·0 | 0·0 | 0·0 | | | 9·7 | Id. |
| | 10 | 705 | 35·0 | 32·2 | 2·8 | 0·0 | 0·0 | | | 9·7 | Id. |
| | 11 | 695 | 34·4 | 32·4 | 2·0 | 0·0 | 0·0 | | | 9·5 | Id. |
| | 12 | 691 | 34·1 | 32·3 | 1·8 | 0·0 | 0·0 | | | 9·5 | Id. |
| | 13 | 29·678 | 33·8 | 32·3 | 1·5 | 0·0 | 0·0 | | | 9·7 | Scud. |
| | 14 | 670 | 33·6 | 32·0 | 1·6 | 0·0 | 0·0 | | | 10·0 | Id. |
| | 15 | 660 | 33·4 | 31·8 | 1·6 | 0·0 | 0·0 | | | 9·5 | Id. |
| | 16 | 653 | 32·6 | 31·0 | 1·6 | 0·0 | 0·0 | | | 4·0 | Id., clearing off. |
| | 17 | 648 | 30·3 | 29·1 | 1·2 | 0·0 | 0·0 | | | 3·0 | Id. |
| | 18 | 638 | 27·7 | ... | ... | 0·0 | 0·0 | | | 2·0 | Id.; cirro-strati to E. |
| | 19 | 637 | 28·7 | 27·4 | 1·3 | 0·0 | 0·0 | | — : 26 : — | 8·5 | Cirro-cumulous scud; streaks of cirri. |
| | 20 | 632 | 30·2 | 29·9 | 0·3 | 0·0 | 0·0 | 30 | 27 : 28 : — | 7·0 | Id., two currents. |
| | 21 | 632 | 32·3 | 31·4 | 0·9 | 0·0 | 0·0 | 25 | | 6·0 | Scud, cumuli, cirri, cirro-cumuli. |
| | 22 | 627 | 35·5 | 32·7 | 2·8 | 0·0 | 0·0 | | — : 28 : 28 | 3·0 | Woolly cirri and cir.-cum.-str.; cirrous haze; scud. |
| | 23 | 614 | 37·2 | 34·3 | 2·9 | 0·0 | 0·0 | 12 | — : — : 28 | 2·5 | Woolly cirri; cirri radiating from NW by N.; scud. |
| 14 | 0 | 602 | 39·7 | 35·0 | 4·7 | 0·0 | 0·0 | | 20 : — : 28 | 4·0 | Pat. of scud; var. of cirri radiating from NW.; cir.-cum. |
| | 1 | 580 | 42·1 | 37·0 | 5·1 | 0·0 | 0·0 | 12 | 15 : 30 : 28 | 6·0 | Scud; cir.-str. scud; cirri; solar halo. |
| | 2 | 565 | 44·4 | 38·8 | 5·6 | 0·2 | 0·0 | 14 | 16, 14, 17 : — : 28 | 9·0 | Scud in various currents; cirri and cir. haze; halo. |
| | 3 | 548 | 45·0 | 39·8 | 5·2 | 0·6 | 0·2 | 15 | — : 0 : 24 | 9·5 | Cir.-str.; woolly cirri; patches of scud. |
| | 4 | 524 | 45·0 | 39·3 | 5·7 | 0·2 | 0·1 | 15 | | 9·9 | Id.; id.; thick haze to E. |
| | 5 | 505 | 43·7 | 39·0 | 4·7 | 0·3 | 0·1 | 14 | — : 16 : — | 10·0 | Cirro-cumulo-strati; cirrous haze. |
| | 6 | 496 | 40·6 | 36·3 | 4·3 | 0·3 | 0·2 | 12 | — : 16 : — | 10·0 | Id.; id. |
| | 7 | 485 | 38·3 | 35·1 | 3·2 | 0·2 | 0·0 | 14 | — : 14 : — | 10·0 | Id.; id. |
| | 8 | 470 | 38·0 | 34·8 | 3·2 | 0·2 | 0·1 | 13 | | 10·0 | Cirrous haze. |
| | 9 | 452 | 37·9 | 34·6 | 3·3 | 0·3 | 0·3 | 13 | | 10·0 | Dark; a few drops of rain. |
| | 10 | 435 | 37·5 | 34·5 | 3·0 | 0·5 | 0·5 | 15 | | 10·0 | Id. |
| | 11 | 418 | 36·5 | 34·2 | 2·3 | 1·0 | 0·5 | 14 | | 10·0 | Light rain. |
| | 12 | 409 | 36·5 | 33·9 | 2·6 | 0·5 | 0·1 | 9 | | 10·0 | A few flakes of snow. |
| | 13 | 29·391 | 36·4 | 32·7 | 3·7 | 0·0 | 0·2 | 6 | | 10·0 | Snow falling pretty heavily. |
| | 14 | 370 | 34·5 | 32·9 | 1·6 | 0·2 | 0·1 | 7 | | 10·0 | Light snow. |
| | 15 | 353 | 33·8 | 33·3 | 0·5 | 0·2 | 0·0 | | | 10·0 | Id. |
| | 16 | 314 | 33·2 | 33·0 | 0·2 | 0·0 | 0·1 | 4 | | 10·0 | Snowing more heavily. |
| | 17 | 293 | 33·2 | 32·9 | 0·3 | 0·1 | 0·0 | | | 10·0 | Id. |

The direction of the wind is indicated by the number of the point of the compass, reckoning N. = 0, E. = 8, S. = 16, W. = 24. The motions of the three strata of clouds, Sc. (scud), C.-s. (cirro-stratus), and Cir. (cirrus), are indicated in a similar manner.

| Gött. Mean Time. | | Barometer at 32°. | Thermometers. Dry. | Wet. | Diff. | Wind. Maximum force in 1h. | 10m. | From | Clouds, Sc. : C.-s. : Ci., moving from | Sky clouded. | Species of Clouds and Meteorological Remarks. |
|---|---|---|---|---|---|---|---|---|---|---|---|
| d. | h. | in. | ° | ° | ° | lbs. | lbs. | pt. | pt. pt. pt. | 0—10. | |
| 14 | 18 | 29·284 | 33·4 | 32·3 | 1·1 | 0·2 | 0·0 | | | 10·0 | Snowing more heavily. |
| | 19 | 265 | 33·3 | 33·0 | 0·3 | 0·2 | 0·2 | 3 | | 10·0 | Slight fall of sleet. |
| | 20 | 269 | 33·6 | 33·2 | 0·4 | 0·3 | 0·2 | 6 | | 10·0 | Id. snow. |
| | 21 | 266 | 33·9 | 33·5 | 0·4 | 0·3 | 0·3 | 4 | 8 : — : — | 10·0 | Scud; nearly homogeneous; slight snow. |
| | 22 | 269 | 34·3 | 33·9 | 0·4 | 1·5 | 1·4 | 6 | | 10·0 | Snow falling pretty heavily; scud. |
| | 23 | 272 | 34·7 | 34·0 | 0·7 | 2·7 | 1·2 | 6 | | 10·0 | Id.; id. |
| 15 | 0 | 279 | 34·3 | 34·0 | 0·3 | 1·4 | 0·9 | 5 | | 10·0 | Snowing rather heavily. |
| | 1 | 288 | 34·7 | 34·4 | 0·3 | 0·9 | 0·5 | 5 | | 10·0 | Id. id. |
| | 2 | 289 | 34·9 | 34·3 | 0·6 | 1·3 | 0·4 | 6 | | 10·0 | Sleet id. |
| | 3 | 296 | 34·4 | 34·3 | 0·1 | 1·0 | 1·4 | 6 | | 10·0 | Id. id. |
| | 4 | 308 | 34·3 | 34·0 | 0·3 | 1·2 | 0·8 | 5 | | 10·0 | Id. id. |
| | 5 | 324 | 33·6 | 33·3 | 0·3 | 0·6 | 0·4 | 6 | | 10·0 | Snowing. id. |
| | 6 | 336 | 33·3 | 33·0 | 0·3 | 0·7 | 0·4 | 4 | | 10·0 | Id. id. |
| | 7 | 346 | 33·0 | 32·9 | 0·1 | 0·6 | 0·5 | 4 | | 10·0 | Id. |
| | 8 | 361 | 33·4 | 33·2 | 0·2 | 0·4 | 0·6 | 4 | | 10·0 | Id. lightly. |
| | 9 | 373 | 32·9 | 32·5 | 0·4 | 1·3 | 0·5 | 4 | | 10·0 | Id. id. |
| | 10 | 398 | 33·3 | 33·0 | 0·3 | 1·2 | 0·8 | 6 | | 10·0 | Snow ceased. |
| | 11 | 424 | 34·2 | 33·3 | 0·9 | 1·3 | 2·6 | 4 | | 10·0 | Slight shower of hail since 10h. |
| | 12 | 437 | 33·9 | 33·0 | 0·9 | 2·1 | 1·0 | 4 | | 10·0 | Snowing since soon after last observation. |
| | 13 | 29·454 | 33·6 | 32·9 | 0·7 | 2·6 | 0·6 | 4 | | 10·0 | Snow showers. |
| | 14 | 471 | 34·9 | 32·8 | 2·1 | 1·9 | 2·5 | 3 | | 10·0 | Fair. |
| | 15 | 491 | 34·8 | 32·7 | 2·1 | 2·3 | 2·6 | 4 | | 10·0 | Snow showers. |
| | 16 | 515 | 34·3 | 31·7 | 2·6 | 2·4 | 2·3 | 3 | | 8·0 | Sky to NW. |
| | 17 | 531 | 33·1 | 30·9 | 2·2 | 2·7 | 1·2 | 3 | | 3·0 | Clouds to E. and SE. |
| | 18 | 552 | 32·8 | 31·2 | 1·6 | 2·9 | 2·2 | 3 | 6 : — : — | 7·0 | Scud and nimbi; hail shower; black to SE. |
| | 19 | 565 | 32·6 | 30·8 | 1·8 | 2·4 | 2·0 | 5 | 4 : — : — | 5·0 | Thick scud; cumuli; woolly cirri; shower of hail. |
| | 20 | 585 | 32·9 | 30·2 | 2·7 | 1·3 | 0·7 | 6 | 6 : — : — | 7·0 | Scud; snow showers around. |
| | 21 | 618 | 34·0 | 32·0 | 2·0 | 2·0 | 1·8 | 6 | 6 : — : — | 4·0 | Scud and loose cumuli; patches of linear cirri. |
| | 22 | 643 | 31·8 | 31·4 | 0·4 | 4·2 | 2·2 | 5 | | 10·0 | Showers of snow; heavy drift. |
| | 23 | 654 | 34·7 | 32·3 | 2·4 | 2·2 | 2·0 | 4 | 6 : — : — | 8·0 | Cirro-stratous scud; cumuli and haze on E. horizon. |
| 16 | 0 | 678 | 35·3 | 32·6 | 2·7 | 2·9 | 2·3 | 5 | 8 : — : — | 3·5 | Scud, loose cumuli. |
| | 1 | 708 | 35·2 | 32·0 | 3·2 | 3·6 | 2·0 | 6 | | 9·5 | Id., frequent showers of hail. |
| | 2 | 722 | 35·2 | 33·3 | 1·9 | 2·4 | 1·9 | 6 | | 10·0 | Snowing. |
| | 3 | 739 | 34·8 | 33·0 | 1·8 | 2·5 | 2·0 | 5 | | 10·0 | Id. lightly. |
| | 4 | 750 | 34·6 | 32·1 | 2·5 | 2·7 | 2·2 | 6 | | 10·0 | Snow ceased. |
| | 5 | 766 | 34·3 | 31·7 | 2·6 | 2·5 | 1·5 | 6 | 6 : — : — | 10·0 | Scud. |
| | 6 | 798 | 33·8 | 32·1 | 1·7 | 1·4 | 0·9 | 6 | | 9·9 | Id. |
| | 7 | 827 | 33·2 | 30·6 | 2·6 | 1·4 | 0·5 | 6 | | 10·0 | Id. |
| | 8 | 847 | 33·0 | 31·0 | 2·0 | 1·3 | 0·7 | 6 | | 10·0 | Id. |
| | 9 | 869 | 33·2 | 30·7 | 2·5 | 2·0 | 1·7 | 5 | | 10·0 | Id. |
| | 10 | 900 | 33·0 | 31·1 | 1·9 | 1·6 | 0·7 | 5 | | 10·0 | Dark. |
| | 11 | 916 | 32·9 | 30·1 | 2·8 | 2·0 | 0·4 | 5 | | 9·0 | Scud. |
| | 12 | 920 | 32·9 | 30·2 | 2·7 | 0·9 | 0·5 | 4 | | 10·0 | Id. |
| 17 | 13 | 30·054 | 20·4 | ... | ... | 0·8 | 0·0 | | | 0·2 | Cirrous haze to NE. |
| | 14 | 055 | 19·8 | 20·0 | ... | 0·0 | 0·0 | | | 0·2 | Id.; stars dim. |
| | 15 | 035 | 19·8 | 19·8 | ... | 0·0 | 0·0 | | | 0·1 | Id.; id. |
| | 16 | 030 | 19·6 | 19·7 | ... | 0·0 | 0·0 | | | 0·2 | Id. E., id. |
| | 17 | 30·021 | 19·0 | 19·0 | ... | 0·0 | 0·0 | | | 0·2 | Cirro-strati to NE.; stars dim. |
| | 18 | 29·996 | 19·7 | 19·7 | ... | 0·0 | 0·0 | | — : 4 : — | 2·0 | Cirro-cumuli; cirri and cirro-strati; cirrous haze. |
| | 19 | 997 | 19·3 | 19·3 | ... | 0·0 | 0·0 | | — : 6 : — | 8·0 | Bands of cir.-cum. radiating from WNW.; cir.-str., cir. |
| | 20 | 993 | 23·0 | 22·9 | 0·1 | 0·0 | 0·0 | 23 | | 9·9 | Cirro-cumulous scud; sky to SW. |
| | 21 | 993 | 27·8 | 26·9 | 0·9 | 0·0 | 0·0 | 20 | — : 3 : — | 9·7 | Id. |
| | 22 | 993 | 32·4 | 30·9 | 1·5 | 0·0 | 0·0 | 20 | | 9·7 | Id., very light rain. |
| | 23 | 992 | 36·5 | 32·4 | 4·1 | 0·0 | 0·0 | | | 9·7 | Id.; sky to N. and S. |
| 18 | 0 | 997 | 40·1 | 37·0 | 3·1 | 0·0 | 0·0 | 20 | | 10·0 | Id. |
| | 1 | 978 | 45·1 | 41·4 | 3·7 | 0·0 | 0·0 | 22 | | 10·0 | Id. |

The direction of the wind is indicated by the number of the point of the compass, reckoning N. = 0, E. = 8, S. = 16, W. = 24. The motions of the three strata of clouds, Sc. (scud), C.-s. (cirro-stratus), and Cir. (cirrus), are indicated in a similar manner.

March 18d 1h. New silk put on wet-bulb thermometer before this observation.

| Gött. Mean Time. | | Barometer at 32°. | Thermometers. Dry. | Wet. | Diff. | Wind. Maximum force in 1h. | 10m. | From | Clouds, Sc. : C.-s. : Ci., moving from | Sky clouded. | Species of Clouds and Meteorological Remarks. |
|---|---|---|---|---|---|---|---|---|---|---|---|
| d. | h. | in. | ° | ° | ° | lbs. | lbs. | pt. | pt. pt. pt. | 0—10. | |
| 18 | 2 | 29·966 | 43·7 | 39·3 | 4·4 | 0·0 | 0·0 | 26 | 0 : 0 : — | 9·9 | Thin scud and cirro-cumuli; sky to NW. |
| | 3 | 950 | 45·3 | 41·0 | 4·3 | 0·0 | 0·0 | 28 | | 10·0 | Cirro-cumulo-strati; scud. |
| | 4 | 942 | 45·2 | 41·3 | 3·9 | 0·0 | 0·0 | | 0 : — : — | 10·0 | Scud; cirrous clouds. |
| | 5 | 936 | 43·2 | 40·0 | 3·2 | 0·0 | 0·0 | | | 10·0 | Id.; id. |
| | 6 | 944 | 40·1 | 38·3 | 1·8 | 0·1 | 0·0 | | 30 : — : — | 9·7 | Id.; id. |
| | 7 | 955 | 38·6 | 37·5 | 1·1 | 0·0 | 0·0 | | 31 : 31 : — | 9·7 | Loose smoky scud; cirro-cumulous scud; sky milky. |
| | 8 | 952 | 37·4 | 36·7 | 0·7 | 0·0 | 0·0 | | | 10·0 | Scud and cirro-cumulous scud. |
| | 9 | 955 | 36·5 | 35·8 | 0·8 | 0·0 | 0·0 | | | 10·0 | Dark. |
| | 10 | 952 | 36·0 | 35·3 | 0·7 | 0·0 | 0·0 | | | 9·5 | A few stars faintly visible in zenith. |
| | 11 | 943 | 35·8 | 35·1 | 0·7 | 0·0 | 0·0 | | | 10·0 | Dark. |
| | 12 | 942 | 36·0 | 35·4 | 0·6 | 0·0 | 0·0 | | | 10·0 | Id. |
| | 13 | 29·936 | 35·9 | 35·3 | 0·6 | 0·0 | 0·0 | | | 10·0 | Dark. |
| | 14 | 915 | 35·8 | 35·2 | 0·6 | 0·0 | 0·0 | | | 10·0 | Id.; clouds a little broken. |
| | 15 | 909 | 35·8 | 35·1 | 0·7 | 0·0 | 0·0 | | | 10·0 | Scud and cirrous haze; occasional breaks in clouds. |
| | 16 | 884 | 35·8 | 35·0 | 0·8 | 0·0 | 0·0 | | | 3·0 | Cirrous clouds and scud; stars faint near horizon. |
| | 17 | 867 | 34·9 | 34·1 | 0·8 | 0·0 | 0·0 | | | 0·7 | Cirrous clouds to E. |
| | 18 | 862 | 33·7 | 33·0 | 0·7 | 0·0 | 0·0 | 20 | 28 : — : — | 0·7 | Patches of scud; cirro-cumuli, cirri. |
| | 19 | 861 | 35·0 | 34·0 | 1·0 | 0·0 | 0·0 | | — : 30 : — | 1·5 | Cirro-cumulo-strati; cirro-strati on horizon. |
| | 20 | 852 | 37·2 | 35·9 | 1·3 | 0·0 | 0·0 | 24 | — : 30 : 30 | 1·0 | Cirro-strati and cirri. |
| | 21 | 844 | 38·5 | 37·2 | 1·3 | 0·0 | 0·0 | 25 | | 4·0 | Cirri, cirro-strati, cirro-cumuli, and cirrous haze. |
| | 22 | 835 | 42·3 | 39·9 | 2·4 | 0·0 | 0·0 | | | 7·0 | Thin cirri and cirrous haze; loose scud on SE. hor. |
| | 23 | 817 | 42·8 | 40·2 | 2·6 | 0·4 | 0·3 | 25 | | 7·0 | Id.; faint solar halo. |
| 19 | 0 | 794 | 44·2 | 41·3 | 2·9 | 0·2 | 0·1 | 24 | | 10·0 | Cumuli; cirri and cirrous haze; solar halo. |
| | 1 | 758 | 45·8 | 42·0 | 3·8 | 0·4 | 0·6 | 26 | | 10·0 | Patches of scud; cumuli, cirri, cirrous haze; solar halo. |
| | 2 | 744 | 48·0 | 43·3 | 4·7 | 0·7 | 0·1 | 25 | 28 : — : — | 10·0 | Scud and cumuli; cirri and haze become thicker. |
| | 3 | 720 | 46·7 | 42·7 | 4·0 | 0·3 | 0·1 | 24 | 27 : — : — | 10·0 | Scud; homogeneous mass of cirri and haze. |
| | 4 | 689 | 45·6 | 41·7 | 3·9 | 0·1 | 0·3 | 25 | 26 : — : — | 10·0 | Scud and loose cumuli; thick cirro-strati. |
| | 5 | 672 | 45·1 | 41·7 | 3·4 | 0·2 | 0·1 | 24 | 28 : — : — | 10·0 | Scud; thick cirro-strati and cirrous haze. |
| | 6 | 644 | 42·7 | 39·8 | 2·9 | 0·3 | 0·1 | 25 | 28 : — : — | 10·0 | Id.; dense cir.-str., with dripping and mottled appearance. |
| | 7 | 623 | 41·9 | 38·9 | 3·0 | 0·7 | 0·4 | 22 | 26 : — : — | 10·0 | Id.; cirrous clouds much thinner. |
| | 8 | 588 | 40·9 | 38·3 | 2·6 | 0·6 | 0·3 | 23 | | 10·0 | Scud and cirri. |
| | 9 | 555 | 40·9 | 38·7 | 2·2 | 0·4 | 0·3 | 21 | | 10·0 | Id. |
| | 10 | 508 | 41·4 | 39·3 | 2·1 | 1·3 | 0·8 | 20 | | 10·0 | Id. |
| | 11 | 449 | 42·6 | 40·2 | 2·4 | 1·4 | 0·4 | 20 | | 10 0 | Id. |
| | 12 | 418 | 42·0 | 40·0 | 2·0 | 0·6 | 0·2 | 20 | | 10·0 | Very dark. |
| | 13 | 29·370 | 44·0 | 41·9 | 2·1 | 1·0 | 0·3 | 20 | | 10·0 | Very dark; light rain. |
| | 14 | 333 | 44·5 | 42·5 | 2·0 | 0·9 | 0·5 | 26 | | 10·0 | Id.; rain. |
| | 15 | 301 | 44·4 | 42·1 | 2·3 | 1·3 | 0·9 | 24 | | 10·0 | Id.; light rain. |
| | 16 | 278 | 43·3 | 41·0 | 2·3 | 0·8 | 0·2 | 25 | | 10·0 | |
| | 17 | 261 | 42·6 | 40·0 | 2·6 | 0·3 | 0·2 | 26 | | 10·0 | Light rain. |
| | 18 | 231 | 41·5 | 39·7 | 1·8 | 0·1 | 0·0 | 26 | | 10·0 | Scud; cirro-strati to E. |
| | 19 | 243 | 41·3 | 39·6 | 1·7 | 0·3 | 0·1 | 29 | | 10·0 | Nearly homogeneous; light rain commenced. |
| | 20 | 253 | 40·7 | 39·4 | 1·3 | 0·2 | 0·1 | 29 | 29 : — : — | 10·0 | Thick scud; heavy shower. |
| | 21 | 300 | 38·3 | 37·4 | 0·9 | 1·7 | 0·8 | 2 | 2 : — : — | 10·0 | Thick mass of scud; drops of rain. |
| | 22 | 363 | 35·9 | 35·3 | 0·6 | 1·7 | 1·1 | 2 | | 10·0 | Scud; showers of rain, snow, and sleet. |
| | 23 | 414 | 37·3 | 35·9 | 1·4 | 2·4 | 1·2 | 3 | 3 : — : — | 10·0 | Id.; showers of sleet. |
| 20 | 0 | 466 | 38·2 | 34·2 | 4·0 | 3·7 | 2·1 | 2 | 3 : — : — | 8·5 | Scud and loose cumuli. |
| | 1 | 506 | 37·9 | 34·0 | 3·9 | 2·7 | 1·8 | 3 | 3 : — : — | 9·5 | Id.; a few flakes of snow. |
| | 2 | 537 | 39·0 | 33·4 | 5·6 | 2·3 | 1·6 | 2 | 2 : — : — | 3·5 | Detached loose cumuli. |
| | 3 | 557 | 38·7 | 33·3 | 5·4 | 2·4 | 1·5 | 2 | 3 : — : — | 3·5 | Id. |
| | 4 | 589 | 39·0 | 34·3 | 4·7 | 2·1 | 1·2 | 2 | 3 : — : — | 1·5 | Id. |
| | 5 | 617 | 38·0 | 32·9 | 5·1 | 1·4 | 0·6 | 2 | 3 : — : — | 3·5 | Id. |
| | 6 | 639 | 37·2 | 32·1 | 5·1 | 0·6 | 0·2 | 2 | 3 : — : — | 1·0 | Id. |
| | 7 | 652 | 34·3 | 31·5 | 2·8 | 0·2 | 0·0 | | | 2·0 | Loose cumuli; linear cirri. |
| | 8 | 669 | 34·0 | 31·0 | 3·0 | 0·0 | 0·0 | | 4 : — : — | 6·0 | Thick scud. |
| | 9 | 687 | 32·2 | 30·6 | 1·6 | 0·0 | 0·0 | | | 0·5 | Clouds to SE. |

The direction of the wind is indicated by the number of the point of the compass, reckoning N. = 0, E. = 8, S. = 16, W. = 24. The motions of the three strata of clouds, Sc. (scud), C.-s. (cirro-stratus), and Cir. (cirrus), are indicated in a similar manner.

March 19d 7h. The cirri have an appearance of radiating from NW., with arcs of circles from NW. as a centre crossing the radiations; cymoid cirri in some places; cirri quite red; blue to E.

March 19d 19h. Observation made at 19h 25m.

| Gött. Mean Time. | Barometer at 32°. | Thermometers. Dry. | Wet. | Diff. | Wind. Maximum force in 1h. | 10m. | From | Clouds, Sc. : C.-s. : Ci., moving from | Sky clouded. | Species of Clouds and Meteorological Remarks. |
|---|---|---|---|---|---|---|---|---|---|---|
| d. h. | in. | ° | ° | ° | lbs. | lbs. | pt. | pt. pt. pt. | 0—10. | |
| 20 10 | 29·708 | 32·9 | 31·2 | 1·7 | 0·0 | 6·0 | | | 2·0 | Clouds and haze on horizon. |
| 11 | 726 | 32·2 | 30·3 | 1·9 | 0·0 | 0·0 | | | 1·5 | Clouds to SW.; haze on horizon. |
| 12 | 736 | 30·2 | 28·9 | 1·3 | 0·0 | 0·0 | | | 0·7 | Clouds and haze on E. horizon. |
| 13 | 29·758 | 30·6 | 28·9 | 1·7 | 0·0 | 0·0 | | | 0·0 | Clear. |
| 14 | 756 | 30·5 | 28·8 | 1·7 | 0·0 | 0·0 | | | 0·0 | Id. |
| 15 | 742 | 28·8 | 27·8 | 1·0 | 0·0 | 0·0 | | | 0·0 | Id. |
| 16 | 766 | 27·9 | 27·4 | 0·5 | 0·0 | 0·0 | | | 0·0 | Id. |
| 17 | 767 | 27·7 | 27·0 | 0·7 | 0·0 | 0·0 | | | 0·1 | Patches of cirro-strati to N.; stars rather faint. |
| 18 | 760 | 28·1 | 26·9 | 1·2 | 0·0 | 0·0 | | | 0·2 | Cirri, cirro-strati, and cirrous haze. |
| 19 | 769 | 27·9 | 26·8 | 1·1 | 0·0 | 0·0 | | | 0·1 | Id., id., id. |
| 20 | 773 | 30·1 | 28·6 | 1·5 | 0·0 | 0·0 | 22 | | 0·2 | Cirro-strati and cirrous haze on horizon. |
| 21 | 762 | 33·0 | 30·7 | 2·3 | 0·0 | 0·0 | 22 | | 0·2 | Id. N. and E. |
| 22 | 754 | 37·1 | 32·9 | 4·2 | 0·0 | 0·2 | 20 | 24 : — : 31 | 4·0 | Scud; cirrous haze and woolly cirri. |
| 23 | 752 | 39·6 | 35·0 | 4·6 | 0·5 | 0·2 | 21 | 24 : — : — | 3·0 | Loose scud; cirri and cirrous haze. |
| 21 0 | 735 | 41·1 | 36·0 | 5·1 | 0·5 | 0·3 | 20 | 24 : — : — | 6·0 | Scud; cirrous haze and cirri. |
| 1 | 708 | 42·4 | 37·7 | 4·7 | 0·9 | 0·4 | 20 | 24 : — : — | 8·7 | Id. |
| 2 | 686 | 44·5 | 39·3 | 5·2 | 1·1 | 0·8 | 21 | 24 : — : — | 8·0 | Id. |
| 3 | 666 | 44·5 | 39·7 | 4·8 | 1·0 | 0·3 | 21 | 24 : — : — | 9·0 | Id.; diffuse cirri and cirrous haze. |
| 4 | 643 | 43·4 | 38·7 | 4·7 | 0·8 | 1·2 | 25 | 24 : — : — | 9·0 | Id. |
| 5 | 614 | 42·9 | 38·9 | 4·0 | 1·0 | 0·6 | 21 | 24 : — : — | 9·7 | Id.; cirrous haze. |
| 6 | 599 | 41·9 | 37·9 | 4·0 | 0·6 | 0·9 | 20 | 24 : — : — | 9·7 | Id.; id. |
| 7 | 588 | 40·8 | 37·6 | 3·2 | 1·0 | 0·4 | 20 | 26 : — : — | 10·0 | Id. |
| 8 | 562 | 40·3 | 37·1 | 3·2 | 0·7 | 0·3 | 21 | 24 : — : — | 10·0 | Id. |
| 9 | 535 | 39·8 | 36·9 | 2·9 | 0·6 | 0·6 | 19 | | 3·0 | Thin clouds and haze. |
| 10 | 518 | 38·0 | 36·3 | 1·7 | 0·8 | 0·2 | 20 | | 2·0 | Masses of scud; stars dim in some places. |
| 11 | 505 | 38·4 | 37·0 | 1·4 | 0·3 | 0·1 | 20 | | 7·0 | Scud; dense clouds on N. horizon. |
| 12 | 480 | 38·3 | 36·9 | 1·4 | 0·2 | 0·1 | 20 | 24 : — : — | 6·5 | Id. |
| 13 | 29·463 | 37·9 | 36·5 | 1·4 | 0·3 | 0·0 | 19 | | 7·0 | Scud. |
| 14 | 435 | 38·9 | 37·3 | 1·6 | 0·3 | 0·0 | 19 | | 8·7 | Id.; sky to N. |
| 15 | 408 | 38·4 | 37·2 | 1·2 | 0·2 | 0·2 | 18 | | 9·0 | Id.; sky to S. |
| 16 | 378 | 38·9 | 37·7 | 1·2 | 0·2 | 0·1 | 19 | | 9·5 | Scud and cirrous haze; stars very faint. |
| 17 | 358 | 39·1 | 37·9 | 1·2 | 0·1 | 0·0 | 19 | | 10·0 | Id. |
| 18 | 336 | 37·3 | 36·2 | 1·1 | 0·5 | 0·4 | 19 | 24 : — : 0 | 8·0 | Scud; cirri and cirrous haze; cirro-strati. |
| 19 | 316 | 35·7 | 35·1 | 0·6 | 0·3 | 0·0 | | 20 : 24 : 0 | 4·0 | Loose scud; cirro-cumulous scud; cirri and cir. haze. |
| 20 | 297 | 40·9 | 39·7 | 1·2 | 0·4 | 0·1 | 20 | 20 : 26 : — | 8·0 | Id.; cirro-cumulo-strati; cirro-strati. |
| 21 | 274 | 43·2 | 41·2 | 2·0 | 0·7 | 0·6 | 20 | 20 : — : — | 8·5 | Id.; id. |
| 22 | 272 | 44·0 | 41·5 | 2·5 | 1·1 | 0·6 | 18 | 20 : 22 : 22 | 8·5 | Scud; cirro-cumulo-strati; woolly and linear cirri. |
| 23 | 255 | 46·0 | 43·6 | 2·4 | 1·5 | 0·4 | 19 | 20 : — : — | 10·0 | Id.; cirrous clouds. |
| 22 0 | 236 | 46·7 | 44·2 | 2·5 | 0·5 | 0·5 | 19 | | 10·0 | Id.; becoming dark to W. |
| 1 | 220 | 46·4 | 43·1 | 3·3 | 1·0 | 0·2 | 19 | 20 : — : — | 10·0 | Id. |
| 2 | 212 | 46·3 | 44·3 | 2·0 | 0·4 | 0·4 | 20 | 21 : — : — | 10·0 | Id. |
| 3 | 200 | 48·8 | 46·0 | 2·8 | 0·2 | 0·1 | 21 | 22 : — : — | 10·0 | Id. |
| 4 | 198 | 50·1 | 46·9 | 3·2 | 0·2 | 0·0 | 26 | 25 : — : — | 10·0 | Id. |
| 5 | 194 | 50·3 | 46·2 | 4·1 | 0·0 | 0·0 | | 24 : — : — | 10·0 | Id. |
| 6 | 199 | 47·1 | 44·3 | 2·8 | 0·1 | 0·0 | 30 | 24 : — : — | 9·7 | Dense masses of scud; cumuli; woolly cirri. |
| 7 | 211 | 45·0 | 43·1 | 1·9 | 0·1 | 0·0 | 30 | 26 : — : — | 10·0 | Scud, moving very slowly. |
| 8 | 226 | 43·7 | 42·5 | 1·2 | 0·0 | 0·0 | | | 10·0 | Dark; light rain. |
| 9 | 238 | 42·5 | 41·7 | 0·8 | 0·0 | 0·0 | | | 10·0 | Id. |
| 10 | 248 | 42·0 | 41·2 | 0·8 | 0·0 | 0·0 | | | 10·0 | Id.; rain. |
| 11 | 251 | 40·8 | 40·2 | 0·6 | 0·0 | 0·0 | | | 10·0 | Id.; light rain. |
| 12 | 266 | 39·2 | 38·3 | 0·9 | 0·2 | 0·2 | 28 | | 10·0 | Heavy rain. |
| 13 | 29·283 | 38·6 | 37·9 | 0·7 | 0·2 | 0·0 | | | 10·0 | Light rain. |
| 14 | 283 | 38·8 | 37·2 | 1·6 | 0·0 | 0·0 | | | 10·0 | Fair. |
| 15 | 290 | 39·2 | 38·2 | 1·0 | 0·1 | 0·0 | | | 10·0 | Scud. |
| 16 | 296 | 38·7 | 37·4 | 1·3 | 0·2 | 0·1 | 28 | | 10·0 | Id. |

The direction of the wind is indicated by the number of the point of the compass, reckoning N. = 0, E. = 8, S. = 16, W. = 24. The motions of the three strata of clouds, Sc. (scud), C.-s. (cirro-stratus), and Cir. (cirrus), are indicated in a similar manner.

| Gött. Mean Time. | | Barometer at 32°. | Thermometers. Dry. | Wet. | Diff. | Wind. Maximum force in 1h. | 10m. | From | Clouds, Sc. : C.-s. : Ci., moving from | Sky clouded. | Species of Clouds and Meteorological Remarks. |
|---|---|---|---|---|---|---|---|---|---|---|---|
| d. | h. | in. | ° | ° | ° | lbs. | lbs. | pt. | pt. pt. pt. | 0—10. | |
| 22 | 17 | 29·306 | 38·1 | 37·1 | 1·0 | 0·2 | 0·1 | 29 | | 10·0 | Scud. |
| | 18 | 330 | 38·0 | 37·0 | 1·0 | 0·2 | 0·2 | 30 | | 10·0 | Light rain; heavy showers since last observation. |
| | 19 | 346 | 38·0 | 37·0 | 1·0 | 0·3 | 0·2 | 30 | 3 : — : — | 10·0 | Scud; light rain. |
| | 20 | 357 | 38·0 | 37·1 | 0·9 | 0·5 | 0·4 | 29 | 3 : — : — | 10·0 | Id.; rather heavy rain. |
| | 21 | 367 | 39·7 | 38·5 | 1·2 | 0·3 | 0·3 | 28 | | 10·0 | Uniform cirrous mass; light rain. |
| | 22 | 374 | 42·6 | 40·8 | 1·8 | 0·3 | 0·3 | 31 | 1 : 0 : — | 9·5 | Loose scud moving quickly; cir.-str. scud, slowly. |
| | 23 | 376 | 43·3 | 41·0 | 2·3 | 0·5 | 0·3 | 0 | 1 : 0 : — | 9·0 | Id. cirro-cumulo-strati. |
| 23 | 0 | 384 | 45·3 | 42·3 | 3·0 | 0·3 | 0·3 | 0 | 1 : — : — | 9·9 | Scud; cirrous clouds. |
| | 1 | 384 | 45·9 | 42·6 | 3·3 | 0·5 | 0·5 | 31 | 1 : — : 31 | 8·0 | Id.; woolly cirri. |
| | 2 | 380 | 47·0 | 42·0 | 5·0 | 0·5 | 0·3 | 31 | | 9·0 | Id.; id. |
| | 3 | 373 | 47·0 | 42·7 | 4·3 | 0·3 | 0·2 | 0 | | 9·5 | Id. |
| | 4 | 358 | 47·2 | 42·9 | 4·3 | 0·2 | 0·1 | 5 | — : 28 : — | 7·0 | Cirro-cumulo-strati; scud and cumuli on horizon. |
| | 5 | 342 | 45·6 | 42·1 | 3·5 | 0·0 | 0·0 | 6 | 26 : — : — | 8·0 | Scud; cirro-cumulo-strati. |
| | 6 | 336 | 44·2 | 41·5 | 2·7 | 0·0 | 0·0 | 7 | 24 : — : — | 9·0 | Id.; id. |
| | 7 | 327 | 42·0 | 40·0 | 2·0 | 0·0 | 0·0 | 14 | 23 : — : — | 8·5 | Id.; cirro-strati and cirrous haze to E. |
| | 8 | 317 | 41·0 | 39·4 | 1·6 | 0·0 | 0·0 | | 22 : — : — | 9·0 | Id. |
| | 9 | 286 | 40·5 | 39·2 | 1·3 | 0·0 | 0·0 | | | 1·5 | Clouds to E. |
| | 10 | 267 | 36·0 | 35·2 | 0·8 | 0·0 | 0·0 | | 20 : — : — | 2·5 | Cirro-cumulous scud. |
| | 11 | 258 | 37·2 | 36·6 | 0·6 | 0·0 | 0·0 | | | 3·5 | Scud. |
| | 12 | 250 | 38·3 | 37·3 | 1·0 | 0·1 | 0·1 | 18 | | 8·0 | Id. |
| 24 | 0 | 28·955 | ... | ... | ... | 3·3 | ... | 25 | | ... | Barometer rising. [WNW. at 6h. |
| | 13 | 29·218 | 37·0 | 36·7 | 0·3 | 2·8 | 0·2 | 20 | | 3·0 | Cirrous clouds, radiating from WNW; moving from |
| | 14 | 222 | 38·0 | 36·3 | 1·7 | 0·6 | 0·2 | 20 | | 10·0 | Dark. |
| | 15 | 223 | 38·9 | 37·0 | 1·9 | 0·2 | 0·3 | 20 | | 9·7 | Cirrous clouds; stars very faint. |
| | 16 | 225 | 39·0 | 37·3 | 1·7 | 0·3 | 0·1 | 20 | | 10·0 | Id.; id. |
| | 17 | 214 | 39·1 | 37·7 | 1·4 | 0·3 | 0·2 | 20 | | 10·0 | Id.; id. |
| | 18 | 233 | 39·8 | 38·3 | 1·5 | 0·2 | 0·1 | 20 | 24 : — : — | 10·0 | Scud; clouds tinged with red to E. |
| | 19 | 228 | 40·2 | 38·7 | 1·5 | 0·1 | 0·0 | | 21 : — : — | 10·0 | Id. |
| | 20 | 220 | 40·3 | 39·1 | 1·2 | 0·0 | 0·0 | | 20 : — : — | 10·0 | Id.; cirrous clouds. |
| | 21 | 206 | 42·9 | 41·0 | 1·9 | 0·2 | 0·1 | 18 | 20 : 22 : — | 10·0 | Loose scud to NW. and E.; thick semifluid cir.-str. |
| | 22 | 187 | 43·6 | 42·0 | 1·6 | 0·4 | 0·3 | 19 | — : 18 : — | 10·0 | Id. to N. and E.; thick cir.-str.; drops of rain. |
| | 23 | 168 | 44·4 | 42·7 | 1·7 | 0·3 | 0·4 | 17 | | 10·0 | Id. id.; fair. |
| 25 | 0 | 136 | 45·3 | 43·0 | 2·3 | 0·6 | 0·4 | 17 | — : 18 : — | 10·0 | Thick semifluid cirro-strati; light rain. |
| | 1 | 073 | 47·0 | 44·0 | 3·0 | 0·8 | 0·9 | 19 | — : 17 : — | 10·0 | Id.; raining lately. |
| | 2 | 29·025 | 47·2 | 44·2 | 3·0 | 1·8 | 1·9 | 17 | 17 : — : — | 10·0 | Scud. |
| | 3 | 28·976 | 45·8 | 45·0 | 0·8 | 1·5 | 1·4 | 17 | 16 : — : — | 10·0 | Id.; raining. |
| | 4 | 918 | 46·0 | 45·3 | 0·7 | 1·8 | 0·6 | 18 | 17 : — : — | 10·0 | Id.; rain. |
| | 5 | 909 | 47·2 | 46·2 | 1·0 | 1·4 | 1·2 | 24 | 20 : — : — | 10·0 | Id. |
| | 6 | 926 | 46·3 | 44·0 | 2·3 | 0·5 | 0·1 | 19 | 24 : — : — | 7·0 | Id.; nimbi to E. |
| | 7 | 917 | 45·0 | 42·3 | 2·7 | 0·4 | 0·3 | 20 | 24 : — : — | 3·5 | Id.; id. |
| | 8 | 918 | 43·0 | 40·9 | 2·1 | 0·5 | 0·3 | 20 | 24 : — : — | 2·0 | Id., cirro-cumulous scud and nimbi. |
| | 9 | 918 | 42·6 | 40·7 | 1·9 | 0·6 | 0·2 | 20 | | 10·0 | Id.; light rain. |
| | 10 | 921 | 43·0 | 41·4 | 1·6 | 0·2 | 0·2 | 21 | | 10·0 | Id.; id. |
| | 11 | 932 | 42·8 | 41·9 | 0·9 | 0·2 | 0·2 | 24 | | 4·0 | Loose scud; cirro-strati. |
| | 12 | 982 | 46·3 | 43·6 | 2·7 | 1·3 | 2·1 | 28 | | 9·0 | Scud. |
| | 13 | 29·042 | 43·6 | 40·4 | 3·2 | 3·0 | 1·1 | 29 | | 2·0 | Scud on horizon. |
| | 14 | 120 | 41·7 | 39·4 | 2·3 | 0·9 | 0·1 | 29 | | 3·0 | Scud. |
| | 15 | 156 | 41·9 | 38·9 | 3·0 | 1·5 | 0·7 | 28 | | 1·5 | Id. |
| | 16 | 186 | 39·7 | 37·5 | 2·2 | 0·2 | 0·6 | 31 | | 0·0 | Stars rather faint. |
| | 17 | 251 | 39·2 | 37·1 | 2·1 | 0·6 | 0·1 | 28 | | 2·0 | Scud. |
| | 18 | 275 | 37·6 | 36·0 | 1·6 | 0·2 | 0·0 | | | 1·0 | Masses of scud on horizon. |
| | 19 | 313 | 37·0 | 35·7 | 1·3 | 0·1 | 0·0 | | — : — : 30 | 1·0 | Woolly and diffuse cirri moving slowly; cir.-str. scud. |
| | 20 | 355 | 40·0 | 38·3 | 1·7 | 0·0 | 0·0 | 16 | — : — : 29 | 6·5 | Woolly, mottled, and diffuse cirri; scud to E. |
| | 21 | 370 | 42·5 | 40·0 | 2·5 | 0·0 | 0·0 | | | 6·0 | Cirri and cirrous haze; patches of scud. |
| | 22 | 388 | 46·3 | 42·3 | 4·0 | 0·2 | 0·0 | 28 | 30 : — : 30 | 3·5 | Scud; cirri and cirrous haze. |

The direction of the wind is indicated by the number of the point of the compass, reckoning N. = 0, E. = 8, S. = 16, W. = 24. The motions of the three strata of clouds, Sc. (scud), C.-s. (cirro-stratus), and Cir. (cirrus), are indicated in a similar manner.

March 25d 20h—21h. The observations were made at 20h 5m and 21h 5m.

| Gött. Mean Time. | Barometer at 32°. | Thermometers. Dry. | Wet. | Diff. | Wind. Maximum force in 1h. | 10m. | From | Clouds, Sc. : C.-s. : Ci., moving from | Sky clouded. | Species of Clouds and Meteorological Remarks. |
|---|---|---|---|---|---|---|---|---|---|---|
| d. h. | in. | ° | ° | ° | lbs. | lbs. | pt. | pt. pt. pt. | 0—10. | |
| 25 23 | 29·404 | 48·7 | 43·9 | 4·8 | 0·0 | 0·0 | 28 | 30 : — : — | 8·0 | Scud; loose cumuli; cirri and cirrous haze; solar halo. |
| 26 0 | 410 | 49·3 | 43·7 | 5·6 | 0·0 | 0·0 | 0 | — : 26 : — | 9·0 | Cirro stratous scud; linear cirri to E. and W. |
| 1 | 422 | 53·5 | 47·5 | 6·0 | 0·0 | 0·0 | | 24 : — : — | 9·5 | Scud; varieties of cirri. |
| 2 | 433 | 53·9 | 47·9 | 6·0 | 0·0 | 0·0 | 17 | 24 : — : — | 9·0 | Masses of scud; cirro-strati, cirro-cumuli, cirrous haze. |
| 3 | 431 | 55·2 | 49·0 | 6·2 | 0·0 | 0·0 | 16 | 19 : — : — | 9·5 | Scud; cirrous haze. |
| 4 | 429 | 53·9 | 47·8 | 6·1 | 0·1 | 0·1 | 20 | 19 : 21 : 26 | 7·0 | Id.; loose cumuli; cirro-cumuli; cymoid cirri. |
| 5 | 431 | 52·0 | 47·2 | 4·8 | 0·4 | 0·3 | 20 | — : 24 : — | 9·0 | Cirro-cumulous scud; many varieties of clouds. |
| 6 | 438 | 49·0 | 45·3 | 3·7 | 0·5 | 0·3 | 18 | 20 : 26 : — | 9·8 | Scud; viscous cir.-cum.-str. in ridges, lying NNW. to |
| 7 | 452 | 46·4 | 43·9 | 2·5 | 0·3 | 0·1 | 19 | 19 : 24 : — | 10·0 | Loose scud; cir.-cum.-str.; cirrous haze. [SSE. |
| 8 | 458 | 46·7 | 44·6 | 2·1 | 0·1 | 0·0 | | | 10·0 | Dense mass of cirro-strati. |
| 9 | 451 | 46·9 | 44·7 | 2·2 | 0·1 | 0·1 | 18 | | 10·0 | Id. |
| 10 | 449 | 46·9 | 44·9 | 2·0 | 0·6 | 0·3 | 18 | | 10·0 | Id. |
| 11 | 431 | 46·7 | 44·7 | 2·0 | 0·2 | 0·1 | 17 | | 10·0 | Id. |
| 12 | 436 | 45·9 | 45·0 | 0·9 | 0·2 | 0·2 | 18 | | 10·0 | Rain. |
| 13 | 29·416 | 47·1 | 46·2 | 0·9 | 0·3 | 0·2 | 20 | | 10·0 | Light rain. |
| 14 | 419 | 47·4 | 46·4 | 1·0 | 0·3 | 0·1 | 22 | | 10·0 | Fair; light on S. horizon. |
| 15 | 409 | 47·7 | 46·3 | 1·4 | 0·4 | 0·3 | 20 | | 6·0 | Clear in zenith; scud all round. |
| 16 | 402 | 47·5 | 46·3 | 1·2 | 0·4 | 0·3 | 19 | | 8·0 | Thick scud. |
| 17 | 394 | 47·9 | 46·7 | 1·2 | 0·7 | 0·0 | 19 | | 10·0 | Rain; dark. |
| 18 | 408 | 48·1 | 46·6 | 1·5 | 0·2 | 0·2 | 20 | 24 : — : — | 10·0 | Scud. |
| 19 | 417 | 48·0 | 47·0 | 1·0 | 0·4 | 0·6 | 20 | 20 : — : — | 10·0 | Loose scud; dense cirro-strati; light drizzle. |
| 20 | 425 | 48·0 | 47·0 | 1·0 | 0·6 | 0·4 | 20 | | 10·0 | Thick cirro-strati; loose stratus on Cheviot. |
| 21 | 448 | 49·1 | 47·8 | 1·3 | 0·2 | 0·0 | | 20 : — : 20 | 9·5 | Scud; woolly cirri and cir.-cum.; drizzle before this. |
| 22 | 458 | 51·1 | 49·0 | 2·1 | 0·2 | 0·2 | 20 | 20 : — : — | 10·0 | Id.; dense cir.-str. and haze; halo at 21h 15m. |
| 23 | 484 | 54·1 | 51·1 | 3·0 | 0·2 | 0·4 | 21 | 22 : 22 : — | 9·8 | Id.; cir.-str. and cir. haze; slight shower at 23h 5m. |
| 27 0 | 501 | 54·3 | 51·1 | 3·2 | 0·2 | 0·1 | 20 | 24 : — : 20 | 6·0 | Loose scud; woolly cirri and cir. haze; strips of linear |
| 1 | 518 | 58·7 | 53·7 | 5·0 | 0·3 | 0·3 | 21 | 24 : — : — | 9·0 | Scud and loose cumuli; cir.-str. and cirri. [cirri. |
| 2 | 537 | 56·2 | 50·1 | 6·1 | 0·5 | 0·0 | 20 | 23 : — : — | 4·0 | Loose cumuli; cirro-strati to E. |
| 3 | 554 | 57·2 | 49·7 | 7·5 | 0·5 | 0·2 | 21 | 22 : — : — | 3·5 | Loose-edged cumuli. |
| 4 | 527 | 57·1 | 49·0 | 8·1 | 1·4 | 0·5 | 20 | 23 : — : — | 2·5 | Cumuli. |
| 5 | 612 | 51·0 | 48·0 | 3·0 | 1·9 | 0·2 | 25 | 22 : 22 : — | 9·0 | Scud; cirrous scud; shower 15m ago. |
| 6 | 635 | 51·9 | 46·7 | 5·2 | 0·5 | 0·8 | 25 | | 3·0 | Id. and loose cumuli. |
| 7 | 684 | 49·0 | 46·1 | 2·9 | 1·3 | 0·1 | 23 | 26 : — : — | 9·5 | Id.; cumuli and cirro-strati on E. horizon. |
| 8 | 726 | 47·0 | 44·2 | 2·8 | 0·2 | 0·1 | 22 | 26 : — : — | 2·5 | Id. |
| 9 | 773 | 45·9 | 42·5 | 3·4 | 0·5 | 0·3 | 23 | 26 : — : — | 3·0 | Id. |
| 10 | 818 | 44·6 | 41·8 | 2·8 | 0·8 | 0·1 | 21 | | 0·2 | Masses of loose scud; cirro-strati near horizon. |
| 11 | 850 | 41·6 | 39·9 | 1·7 | 0·2 | 0·1 | | | 0·1 | A patch of scud to S.; sky clear. |
| 12 | 883 | 40·8 | 39·0 | 1·8 | 0·1 | 0·0 | 22 | | 0·5 | Cirro-strati to E. |
| 13 | 29·919 | 38·3 | 37·1 | 1·2 | 0·0 | 0·0 | 18 | 0 : — : — | 0·7 | Patches of scud; cirro-strati to E. |
| 14 | 947 | 36·6 | 35·3 | 1·3 | 0·0 | 0·0 | 18 | — : 0 : — | 3·0 | Cirro-cumulo-strati; cirro-strati. |
| 15 | 971 | 38·1 | 36·2 | 1·9 | 0·0 | 0·0 | 20 | — : 0 : — | 7·0 | Id.; id. |
| 16 | 29·977 | 36·0 | 34·8 | 1·2 | 0·0 | 0·0 | | | 1·5 | Cirro-strati. |
| 17 | 30·000 | 35·5 | 34·6 | 0·9 | 0·0 | 0·0 | 20 | | 2·0 | Id. |
| 18 | 019 | 34·0 | 33·0 | 1·0 | 0·0 | 0·0 | | | 1·0 | Cirro-cumulous scud to E. |
| 19 | 037 | 31·8 | 31·5 | 0·3 | 0·0 | 0·0 | | | 0·5 | Cirro-strati on E. horizon. |
| 20 | 052 | 36·2 | 34·9 | 1·3 | 0·0 | 0·0 | | | 1·5 | Cirro-strati and cirrous haze on E. hor.; linear cirri. |
| 21 | 066 | 40·0 | 37·7 | 2·3 | 0·0 | 0·0 | 17 | | 0·2 | Clear, except a sheet of faint cirro-strati to N. |
| 22 | 067 | 44·6 | 41·5 | 3·1 | 0·0 | 0·0 | | | 0·0 | Id. |
| 23 | 095 | 48·1 | 43·9 | 4·2 | 0·5 | 0·4 | 20 | | 1·0 | Patches of scud to N. and W.; woolly cirri and cir. haze. |
| 28 0 | 113 | 49·9 | 44·5 | 5·4 | 1·0 | 0·7 | 21 | 24 : — : 24 | 7·0 | Patches of scud; woolly cirri and cir. haze lying SSW. |
| 1 | 124 | 52·3 | 47·0 | 5·3 | 1·7 | 0·8 | 20 | | 8·0 | Id.; id. [to NNE. |
| 2 | 119 | 52·9 | 48·0 | 4·9 | 0·7 | 0·5 | 20 | — : — : 24 | 7·0 | Id. woolly cirri, cirrous haze; cirro-strati. |
| 3 | 109 | 52·7 | 46·6 | 6·1 | 0·8 | 0·2 | 19 | 20 : — : — | 3·0 | Scud; woolly cirri to E. |
| 4 | 100 | 52·9 | 47·2 | 5·7 | 0·5 | 0·5 | 20 | — : — : 20 | 7·0 | Woolly cirri and cirrous haze; patches of scud. |
| 5 | 111 | 52·3 | 46·0 | 6·3 | 0·4 | 0·2 | 19 | | 7·0 | Id.; id. |
| 6 | 144 | 49·6 | 44·4 | 5·2 | 0·7 | 0·6 | 19 | — : — : 24 | 2·0 | Woolly and feathered cirri, radiating from N. |

The direction of the wind is indicated by the number of the point of the compass, reckoning N. = 0, E. = 8, S. = 16, W. = 24. The motions of the three strata of clouds, Sc. (scud), C.-s. (cirro-stratus), and Cir. (cirrus), are indicated in a similar manner.

| Gött. Mean Time. | Barometer at 32°. | Thermometers. Dry. | Wet. | Diff. | Wind. Maximum force in 1h. | 10m. | From | Clouds, Sc. : C.-s. : Ci., moving from | Sky clouded. | Species of Clouds and Meteorological Remarks. |
|---|---|---|---|---|---|---|---|---|---|---|
| d. h. | in. | ° | ° | ° | lbs. | lbs. | pt. | pt. pt. pt. | 0—10. | |
| 28 7 | 30·116 | 45·7 | 40·9 | 4·8 | 1·9 | 0·9 | 19 | — : — : 24 | 2·5 | Woolly and feathered cirri, radiating from N.; cir.-str. |
| 8 | 155 | 43·3 | 39·9 | 3·4 | 2·9 | 0·6 | 19 | | 1·0 | Woolly cirri, rad. from NNW., having a bend towards |
| 9 | 165 | 41·9 | 39·0 | 2·9 | 1·1 | 0·0 | | — : — : 24 | 3·0 | Id., causing a coloured lunar corona. [W. at NNW. |
| 10 | 171 | 41·8 | 39·0 | 2·8 | 0·2 | 0·0 | 20 | | 7·0 | As before; lunar halo. |
| 11 | 182 | 39·9 | 38·4 | 1·5 | 0·0 | 0·0 | | | 7·0 | Woolly cirri, cirro-strati, and thin cir. haze; no halo. |
| 12 | 186 | 40·0 | 38·7 | 1·3 | 0·0 | 0·0 | | — : 24 : — | 4·0 | Cirro-cumuli and cirro-strati. |
| 13 | 30·206 | 42·0 | 40·3 | 1·7 | 0·0 | 0·0 | | 21 : — : — | 6·5 | Loose scud, moving quickly; cirro-strati; small corona. |
| 14 | 216 | 44·0 | 42·8 | 1·2 | 0·1 | 0·0 | 21 | | 7·0 | Scud; a slight breath of wind 15m ago. |
| 15 | 209 | 45·0 | 43·7 | 1·3 | 0·1 | 0·0 | 19 | | 10·0 | Id. |
| 16 | 209 | 44·9 | 43·8 | 1·1 | 0·1 | 0·0 | | | 8·0 | A few stars dimly visible through thin clouds. |
| 17 | 211 | 44·8 | 43·7 | 1·1 | 0·0 | 0·0 | | | 9·5 | Id. |
| 18 | 215 | 45·5 | 44·2 | 1·3 | 0·2 | 0·2 | 20 | 22 : — : — | 9·7 | Scud; cir.-cum. and cir.-str.; clouds tinged with red to E. |
| 19 | 241 | 45·7 | 44·3 | 1·4 | 0·2 | 0·0 | 20 | 22 : — : — | 10·0 | Id., nearly homogeneous; cirrous haze, &c. to E. |
| 20 | 241 | 46·9 | 45·1 | 1·8 | 0·4 | 0·2 | 20 | 24 : — : — | 10·0 | Id.; haze to E., more broken than at last hour. |
| 21 | 235 | 47·9 | 46·0 | 1·9 | 0·5 | 0·0 | 23 | 22 : — : — | 10·0 | Id.; woolly cirro-cumuli to E. |
| 22 | 252 | 50·8 | 48·2 | 2·6 | 0·3 | 0·2 | | 21 : 27 : 27 | 9·0 | Thin scud; cirro-cumuli; woolly and mottled cirri. |
| 23 | 267 | 51·3 | 48·4 | 2·9 | 0·2 | 0·0 | 20 | 22 : 28 : 28 | 8·0 | Id.; id.; id. |
| 29 0 | 265 | 54·2 | 50·5 | 3·7 | 0·2 | 0·2 | 20 | — : — : 26 | 5·0 | Var. of cirri; patches of cir.-cum.; cir. haze on hor. |
| 1 | 259 | 56·5 | 52·3 | 4·2 | 0·3 | 0·2 | | | 8·0 | Cir. haze over most of the sky; cir.-cum. and scud to N. |
| 2 | 261 | 56·0 | 51·3 | 4·7 | 0·6 | 0·3 | 20 | | 3·0 | Nearly as before. |
| 3 | 260 | 54·0 | 49·8 | 4·2 | 0·8 | 0·4 | 20 | | 4·0 | Id.; very thin cirri. [to E. |
| 4 | 254 | 54·1 | 49·8 | 4·3 | 0·5 | 0·2 | 21 | | 4·0 | Thin cirri over most of the sky; cir.-cum. to N.; foggy |
| 5 | 251 | 54·6 | 50·0 | 4·6 | 0·2 | 0·1 | 22 | | 0·7 | Patches of cirro-strati; thin woolly cirri and cir. haze. |
| 6 | 245 | 54·0 | 49·7 | 4·3 | 0·0 | 0·0 | 20 | | 0·5 | Id.; id. |
| 7 | 254 | 51·4 | 48·1 | 3·3 | 0·1 | 0·0 | | | 0·5 | Id.; id. |
| 8 | 258 | 46·3 | 45·0 | 1·3 | 0·0 | 0·0 | | | 1·0 | Id.; id. |
| 9 | 258 | 44·4 | 43·3 | 1·1 | 0·0 | 0·0 | | | 0·5 | Patches of cirri; cirrous haze. |
| 10 | 258 | 41·4 | 40·8 | 0·6 | 0·0 | 0·0 | | | 0·0 | Cirrous haze. |
| 11 | 257 | 39·3 | 38·9 | 0·4 | 0·0 | 0·0 | | | 0·2 | Thin haze, causing col. lunar corona; very faint aurora. |
| 12 | 253 | 37·5 | 37·2 | 0·3 | 0·0 | 0·0 | | | 0·2 | Thin cirri; aurora faintly visible, owing to moonlight. |
| 13 | 30·258 | 34·8 | 34·7 | 0·1 | 0·0 | 0·0 | | | 0·0 | Clear. |
| 14 | 251 | 33·1 | 33·0 | 0·1 | 0·0 | 0·0 | | | 0·0 | Id. |
| 15 | 242 | 34·3 | 34·0 | 0·3 | 0·0 | 0·0 | | | 0·0 | Id. |
| 16 | 235 | 32·2 | 32·1 | 0·1 | 0·0 | 0·0 | | | 0·0 | A few streaks of cirri; aurora very faint. |
| 17 | 232 | 29·9 | 29·5 | 0·4 | 0·0 | 0·0 | | | 0·5 | Cirro-strati and haze on E. horizon. |
| 18 | 227 | 31·2 | 31·2 | ... | 0·0 | 0·0 | | | 0·8 | |
| 19 | 234 | 31·7 | 31·7 | ... | 0·0 | 0·0 | | | 1·0 | Linear cirri and cirrous haze; heavy hoar-frost. |
| 20 | 243 | 34·0 | 34·0 | ... | 0·0 | 0·0 | | | 0·5 | Thin cirrous haze over sky; portion of solar halo. |
| 21 | 245 | 37·0 | 36·8 | 0·2 | 0·0 | 0·0 | | | 1·0 | Cirrous haze on hor.; woolly cirri and cir.-str. to NE. |
| 22 | 248 | 42·8 | 41·4 | 1·4 | 0·0 | 0·0 | | | 0·5 | Thin cirri and haze. |
| 23 | 241 | 47·0 | 44·8 | 2·2 | 0·0 | 0·0 | 20 | | 0·2 | Wisps of cirri; fog and cirrous haze on horizon. |
| 30 0 | 227 | 50·7 | 47·6 | 3·1 | 0·0 | 0·0 | | | 0·2 | As before. |
| 1 | 219 | 55·0 | 50·4 | 4·6 | 0·0 | 0·0 | | | 0·2 | Id. |
| 2 | 208 | 58·3 | 52·4 | 5·9 | 0·0 | 0·0 | | | 0·2 | Fog and haze on horizon. |
| 3 | 188 | 60·0 | 53·3 | 6·7 | 0·0 | 0·0 | | | 0·2 | Id. |
| 4 | 174 | 61·9 | 54·0 | 7·9 | 0·0 | 0·0 | | | 0·2 | |
| 5 | 165 | 60·1 | 53·2 | 6·9 | 0·0 | 0·0 | | | 0·2 | |
| 6 | 165 | 56·9 | 51·9 | 5·0 | 0·0 | 0·0 | | | 0·0 | Thick and hazy. |
| 7 | 175 | 53·0 | 50·0 | 3·0 | 0·0 | 0·0 | | | 0·0 | Id. |
| 8 | 225 | 49·2 | 46·0 | 3·2 | 0·0 | 0·0 | | | 0·0 | |
| 9 | 199 | 46·6 | 44·4 | 2·2 | 0·0 | 0·0 | | | 0·5 | Haze and fog; fine cirri; faint lunar corona. |
| 10 | 199 | 44·0 | 43·0 | 1·0 | 0·0 | 0·0 | | | 1·0 | Fine cirri and haze; coloured lunar corona 3° diam. |
| 11 | 191 | 41·0 | 40·0 | 1·0 | 0·0 | 0·0 | | | 0·2 | Haze, chiefly to N.; corona very faint. |
| 12 | 183 | 40·8 | 39·8 | 1·0 | 0·0 | 0·0 | | | 0·5 | Patches of fine cirri; corona larger; less hazy to N. |
| 23½ | 30·096 | ... | ... | ... | 0·3 | ... | 16 | | | |

The direction of the wind is indicated by the number of the point of the compass, reckoning N. = 0, E. = 8, S. = 16, W. = 24. The motions of the three strata of clouds, Sc. (scud), C.-s. (cirro-stratus), and Cir. (cirrus), are indicated in a similar manner.

| Gött. Mean Time. | | Barometer at 32°. | Thermometers. Dry. | Wet. | Diff. | Wind. Maximum force in 1h. | 10m. | From | Clouds, Sc. : C.-s. : Ci., moving from | Sky clouded. | Species of Clouds and Meteorological Remarks. |
|---|---|---|---|---|---|---|---|---|---|---|---|
| d. | h. | in. | ° | ° | ° | lbs. | lbs. | pt. | pt. pt. pt. | 0—10. | |
| 31 | 13 | 29·968 | 38·1 | 38·0 | 0·1 | 1·4 | 0·0 | | | 0·0 | Slight haze on N. and E. horizon. |
| | 14 | 959 | 37·4 | 37·3 | 0·1 | 0·0 | 0·0 | | | 0·0 | Id. |
| | 15 | 949 | 33·9 | 34·0 | ... | 0·0 | 0·0 | | | 0·0 | Id. |
| | 16 | 952 | 33·8 | 33·7 | 0·1 | 0·0 | 0·0 | | | 0·0 | Id. |
| | 17 | 953 | 32·9 | 32·9 | ... | 0·0 | 0·0 | | | 0·2 | Cirrous haze on E. horizon. |
| | 18 | 957 | 31·3 | 31·2 | 0·1 | 0·0 | 0·0 | | | 0·2 | Increasing patches of clouds ; cirrous haze ; heavy dew. |
| | 19 | 962 | 32·4 | 32·4 | ... | 0·0 | 0·0 | | | 0·0 | Hazy on horizon ; slight fog ; hoar-frost. |
| | 20 | 965 | 35·2 | 35·0 | ... | 0·0 | 0·0 | 20 | | 0·0 | Id. ; id. id. |
| | 21 | 957 | 39·8 | 39·2 | 0·6 | 0·0 | 0·0 | | | 0·0 | Id. |
| | 22 | 949 | 47·8 | 45·8 | 2·0 | 0·0 | 0·0 | 20 | — : — : 18 | 0·2 | Thin cirri lying N. and S. ; patches of cir.-str. to SE. |
| | 23 | 943 | 54·2 | 49·5 | 4·7 | 0·1 | 0·3 | 19 | | 0·2 | Patches of scud and cirro-cumuli. |
| 1 | 0 | 940 | 56·3 | 50·2 | 6·1 | 0·3 | 0·4 | 21 | — : 20 : — | 3·0 | Cirro-stratous scud ; cir.-str., cumuli, cum.-str. on hor. |
| | 1 | 938 | 57·2 | 51·8 | 5·4 | 0·5 | 0·6 | 22 | — : 20 : — | 2·0 | Id. ; cumulo-strati and haze on hor. |
| | 2 | 938 | 56·9 | 51·7 | 5·2 | 1·0 | 0·7 | 20 | 19 : — : — | 2·5 | Scud and loose cumuli ; fine cirri to W. |
| | 3 | 924 | 56·1 | 50·7 | 5·4 | 2·1 | 0·9 | 20 | 19 : — : — | 2·5 | Id. ; woolly and linear cirri. |
| | 4 | 919 | 55·0 | 49·8 | 5·2 | 1·3 | 0·6 | 21 | 21 : — : — | 5·0 | Id. ; id. |
| | 5 | 923 | 53·7 | 49·3 | 4·4 | 1·0 | 0·5 | 20 | 22 : — : 20 | 3·0 | Patches of scud ; id. |
| | 6 | 929 | 52·0 | 48·0 | 4·0 | 0·6 | 0·2 | 18 | — : — : 20 | 4·0 | Cirri radiating from SSW. ; masses of scud. |
| | 7 | 920 | 48·0 | 45·8 | 2·2 | 0·5 | 0·1 | 21 | 22 : — : — | 3·0 | Patches of scud ; woolly and linear cirri. |
| | 8 | 920 | 44·9 | 43·7 | 1·2 | 0·2 | 0·0 | | 22 : — : — | 6·0 | Scud ; cirrous clouds. |
| | 9 | 921 | 43·7 | 42·9 | 0·8 | 0·0 | 0·0 | | — : — : 24 | 6·0 | Woolly, diffuse, and linear cirri ; scud to N. |
| | 10 | 910 | 44·8 | 43·8 | 1·0 | 0·0 | 0·0 | | | 6·0 | Id. |
| | 11 | 887 | 42·5 | 42·0 | 0·5 | 0·0 | 0·0 | | — : 20 : — | 4·0 | Cirro-stratous scud ; cirro-cumuli ; haze to E. and NE. |
| | 12 | 870 | 47·1 | 47·0 | 0·1 | 0·0 | 0·0 | | — : 20 : — | 7·0 | Id. ; id. |
| | 13 | 29·852 | 43·3 | 43·0 | 0·3 | 0·0 | 0·0 | | — : 20 : — | 9·0 | Cirro-stratous scud ; haze. |
| | 14 | 833 | 43·2 | 42·8 | 0·4 | 0·0 | 0·0 | | 20 : — : — | 10·0 | Thick scud. |
| | 15 | 813 | 44·9 | 43·6 | 1·3 | 0·0 | 0·1 | 22 | | 10·0 | Id. |
| | 16 | 788 | 44·8 | 43·3 | 1·5 | 1·0 | 0·8 | 18 | | 10·0 | Id. |
| | 17 | 781 | 43·9 | 43·0 | 0·9 | 0·8 | 0·2 | 19 | | 10·0 | Id. |
| | 18 | 756 | 44·4 | 43·4 | 1·0 | 0·4 | 0·4 | 19 | | 10·0 | Id. |
| | 19 | 761 | 45·0 | 44·0 | 1·0 | 1·3 | 0·4 | 19 | 20 : — : — | 10·0 | Scud. |
| | 20 | 746 | 46·0 | 44·1 | 1·9 | 1·3 | 0·5 | 19 | 20 : — : — | 10·0 | Id. |
| | 21 | 723 | 46·8 | 44·4 | 2·4 | 1·5 | 1·0 | 19 | 20 : — : — | 10·0 | Id. |
| | 22 | 695 | 48·2 | 45·6 | 2·6 | 1·3 | 1·6 | 20 | 20 : — : — | 10·0 | Id. |
| | 23 | 668 | 51·0 | 47·1 | 3·9 | 2·8 | 1·5 | 19 | 20 : — : — | 10·0 | Id. ; cirro-cumuli and cirro-strati. |
| 2 | 0 | 642 | 50·5 | 46·3 | 4·2 | 2·4 | 2·0 | 20 | 20 : — : — | 9·7 | Scud moving rapidly ; cirri and cirro-strati. |
| | 1 | 599 | 54·0 | 49·0 | 5·0 | 3·9 | 4·2 | 20 | 20 : 22 : — | 9·7 | Id. ; cirro-strati. |
| | 2 | 596 | 51·1 | 46·9 | 4·2 | 4·3 | 2·4 | 21 | 20 : — : — | 10·0 | Scud ; cirro-strati and cirrous haze. |
| | 3 | 565 | 51·9 | 47·4 | 4·5 | 3·4 | 3·4 | 20 | 20 : — : — | 10·0 | Id. ; dark stormy looking cirro-strati to SE. |
| | 4 | 572 | 49·0 | 46·0 | 3·0 | 3·9 | 2·4 | 19 | 20 : — : — | 10·0 | Id. ; cirro-strati. |
| | 5 | 554 | 48·0 | 46·0 | 2·0 | 1·8 | 1·0 | 19 | 20 : — : — | 10·0 | Id. ; id. ; very light rain. |
| | 6 | 531 | 47·6 | 46·0 | 1·6 | 1·7 | 1·2 | 18 | 19 : — : — | 10·0 | Id. ; very light rain. |
| | 7 | 511 | 46·8 | 45·6 | 1·2 | 2·0 | 1·5 | 18 | 19 : — : — | 10·0 | Id. |
| | 8 | 493 | 46·4 | 45·1 | 1·3 | 1·6 | 0·7 | 18 | | 10·0 | Id. |
| | 9 | 470 | 46·5 | 45·3 | 1·2 | 1·2 | 0·4 | 19 | | 10·0 | Id. |
| | 10 | 459 | 46·1 | 45·1 | 1·0 | 0·5 | 0·3 | 19 | | 10·0 | Id. |
| | 11 | 448 | 45·5 | 45·2 | 0·3 | 0·3 | 0·3 | 18 | | 10·0 | Id. ; light rain. |
| | 12 | 445 | 45·7 | 45·3 | 0·4 | 0·6 | 0·3 | 18 | | 10·0 | Id. ; id. |
| | 13 | 29·432 | 45·5 | 45·1 | 0·4 | 0·5 | 0·1 | 18 | | 10·0 | Scud ; moderate rain. |
| | 14 | 421 | 45·3 | 45·0 | 0·3 | 0·5 | 0·2 | 18 | | 10·0 | Id. ; light rain. |
| | 15 | 415 | 44·9 | 44·3 | 0·6 | 0·2 | 0·1 | 19 | | 10·0 | Id. ; moderate rain. |
| | 16 | 412 | 43·6 | 43·0 | 0·6 | 0·0 | 0·0 | | | 10·0 | Id. ; light rain. |
| | 17 | 407 | 42·9 | 42·5 | 0·4 | 0·0 | 0·0 | | | 10·0 | Id. ; id. |
| | 18 | 413 | 42·8 | 42·1 | 0·7 | 0·0 | 0·0 | | 24 : — : — | 10·0 | Id. ; id. |
| | 19 | 423 | 42·8 | 42·2 | 0·6 | 0·0 | 0·0 | | | 10·0 | Homogeneous mass of clouds. |
| | 20 | 431 | 43·1 | 42·6 | 0·5 | 0·0 | 0·0 | | | 10·0 | Uniform mass of scud and cir.-str. ; patches of scud and cumuli. |

The direction of the wind is indicated by the number of the point of the compass, reckoning N. = 0, E. = 8, S. = 16, W. = 24. The motions of the three strata of clouds, Sc. (scud), C.-s. (cirro-stratus), and Cir. (cirrus), are indicated in a similar manner.

| Gött. Mean Time. | Barometer at 32°. | Thermometers. Dry. | Wet. | Diff. | Wind. Maximum force in 1h. | 10m. | From | Clouds, Sc. : C.-s. : Ci., moving from | Sky clouded. | Species of Clouds and Meteorological Remarks. |
|---|---|---|---|---|---|---|---|---|---|---|
| d. h. | in. | ° | ° | ° | lbs. | lbs. | pt. | pt. pt. pt. | 0—10. | |
| 2 21 | 29·441 | 45·0 | 43·8 | 1·2 | 0·1 | 0·1 | 22 | 22 : — : — | 10·0 | Patches of loose scud; dense cirro-strati. |
| 22 | 440 | 47·3 | 44·9 | 2·4 | 0·1 | 0·2 | 20 | | 10·0 | Loose scud; id. |
| 23 | 442 | 48·0 | 45·3 | 2·7 | 0·3 | 0·2 | 21 | 21 : — : — | 10·0 | Scud. |
| 3 0 | 450 | 48·6 | 45·1 | 3·5 | 0·2 | 0·2 | 20 | 22 : — : — | 10·0 | Id. |
| 1 | 454 | 50·4 | 46·3 | 4·1 | 0·3 | 0·0 | 18 | 20 : — : — | 10·0 | Id. |
| 2 | 449 | 50·1 | 45·6 | 4·5 | 0·2 | 0·3 | 20 | 21 : — : — | 10·0 | Id.; ranges of cumuli. |
| 3 | 449 | 49·6 | 45·3 | 4·3 | 0·7 | 0·4 | 19 | 20 : — : — | 10·0 | Id. |
| 4 | 443 | 48·2 | 44·2 | 4·0 | 0·8 | 0·3 | 19 | 19 : — : — | 10·0 | Id.; loose cumuli. |
| 5 | 461 | 47·2 | 43·9 | 3·3 | 0·7 | 0·4 | 19 | 20 : — : — | 10·0 | Id. |
| 6 | 458 | 45·7 | 42·4 | 3·3 | 0·6 | 0·5 | 19 | 20 : — : — | 10·0 | Id.; nearly homogeneous mass of clouds. |
| 7 | 464 | 44·0 | 41·2 | 2·8 | 0·6 | 0·3 | 20 | | 10·0 | Patches of scud; cir.-str. waved and distorted to E. |
| 8 | 476 | 43·0 | 40·2 | 2·8 | 0·5 | 0·2 | 20 | | 10·0 | Cirro-strati radiated from S. |
| 9 | 473 | 41·9 | 39·9 | 2·0 | 0·1 | 0·0 | 20 | | 10·0 | Id. |
| 10 | 472 | 41·7 | 39·7 | 2·0 | 0·0 | 0·0 | | | 10·0 | Id. |
| 11 | 477 | 41·0 | 39·2 | 1·8 | 0·0 | 0·0 | | | 10·0 | Dense cirrous mass. |
| 12 | 475 | 40·6 | 39·1 | 1·5 | 0·0 | 0·0 | | | 10·0 | Id. |
| 13 | 29·472 | 39·7 | 38·7 | 1·0 | 0·0 | 0·0 | | | 10·0 | Dense cirrous mass; Moon occasionally visible. |
| 14 | 457 | 39·2 | 38·2 | 1·0 | 0·0 | 0·0 | | | 10·0 | Dense mass of clouds. |
| 15 | 453 | 39·0 | 38·1 | 0·9 | 0·0 | 0·0 | | | 10·0 | Id.; slight shower. |
| 16 | 438 | 39·1 | 38·6 | 0·5 | 0·0 | 0·0 | | | 10·0 | Id. |
| 17 | 452 | 37·6 | 37·4 | 0·2 | 0·0 | 0·0 | | | 10·0 | Id.; light rain since 16h. |
| 18 | 443 | 36·1 | 35·9 | 0·2 | 0·0 | 0·0 | | | 10·0 | Light drizzle. |
| 19 | 448 | 36·6 | 36·1 | 0·5 | 0·0 | 0·0 | | | 10·0 | Uniform mass of clouds; light drizzle. |
| 20 | 436 | 37·2 | 36·4 | 0·8 | 0·0 | 0·0 | 8 | | 10·0 | Id.; light fall of snow and hail. |
| 21 | 428 | 38·2 | 37·7 | 0·5 | 0·0 | 0·0 | 11 | | 10·0 | Id.; loose scud to SE. and N. |
| 22 | 422 | 40·2 | 38·8 | 1·4 | 0·0 | 0·0 | | 6 : — : — | 10·0 | Scud. |
| 23 | 413 | 40·7 | 38·8 | 1·9 | 0·0 | 0·0 | 7 | | 10·0 | Id. |
| 4 0 | 402 | 42·4 | 40·5 | 1·9 | 0·0 | 0·0 | | 7 : — : — | 10·0 | Scud moving slowly. |
| 1 | 399 | 44·1 | 41·9 | 2·2 | 0·0 | 0·0 | 4 | | 10·0 | Scud. |
| 2 | 404 | 45·2 | 42·9 | 2·3 | 0·0 | 0·0 | 20 | | 10·0 | |
| 3 | 412 | 47·0 | 44·3 | 2·7 | 0·0 | 0·0 | 16 | | 10·0 | Dense clouds. |
| 4 | 406 | 47·0 | 44·2 | 2·8 | 0·0 | 0·0 | | | 10·0 | |
| 5 | 411 | 46·3 | 44·0 | 2·3 | 0·0 | 0·0 | | 17 : — : — | 10·0 | Thick scud; cirrous clouds seen above. |
| 6 | 395 | 45·0 | 43·0 | 2·0 | 0·0 | 0·0 | | — : — : 16 | 9·9 | Var. of cirri lying in bands from S. to N.; scud near horizon. |
| 7 | 407 | 43·6 | 42·3 | 1·3 | 0·0 | 0·0 | | — : 16 : — | 9·8 | Cir.-str. and cirrous clouds; patches of scud. |
| 8 | 416 | 41·7 | 41·0 | 0·7 | 0·0 | 0·0 | | | 10·0 | Cirro-strati; thin cirrous clouds and haze. |
| 9 | 433 | 40·0 | 39·8 | 0·2 | 0·0 | 0·0 | | | 8·0 | Scud and cirrous clouds. |
| 10 | 430 | 37·4 | 37·2 | 0·2 | 0·0 | 0·0 | | | 0·5 | Stars indistinct owing to haze. |
| 11 | 433 | 37·2 | 37·2 | ... | 0·0 | 0·0 | | | 1·0 | Very hazy on hor.; fog on the ground; lunar halo. |
| 12 | 437 | 36·0 | 35·9 | 0·1 | 0·0 | 0·0 | | | 8·0 | Scud and haze. |
| 13 | 29·433 | 36·3 | 36·2 | 0·1 | 0·0 | 0·0 | | | 10·0 | Scud and haze. |
| 14 | 424 | 36·2 | 36·1 | 0·1 | 0·0 | 0·0 | | 24 : — : — | 10·0 | Scud; thick fog. |
| 15 | 432 | 35·8 | 35·6 | 0·2 | 0·0 | 0·0 | | | 10·0 | Id.; id. |
| 16 | 433 | 35·7 | 35·5 | 0·2 | 0·0 | 0·0 | | | 10·0 | Id.; id. |
| 17 | 422 | 35·7 | 35·6 | 0·1 | 0·0 | 0·0 | | | 10·0 | Id.; id. |
| 18 | 419 | 34·5 | 34·3 | 0·2 | 0·0 | 0·0 | | | 10·0 | Id.; id. |
| 19 | 423 | 34·3 | 34·3 | ... | 0·0 | 0·0 | | — : 15 : — | 8·5 | Cirro-cumulo-strati; stratus; heavy dew. |
| 20 | 421 | 37·0 | 36·7 | 0·3 | 0·0 | 0·0 | | | 10·0 | Thick and very damp fog. |
| 21 | 426 | 37·9 | 37·8 | 0·1 | 0·0 | 0·0 | | — : 16 : — | 10·0 | Fog; cirrous clouds. |
| 22 | 424 | 41·9 | 41·1 | 0·8 | 0·0 | 0·0 | | — : 16 : — | 10·0 | Thick cirro-strati and cirrous haze; fog almost gone. |
| 23 | 412 | 50·0 | 47·3 | 2·7 | 0·0 | 0·0 | | | 10·0 | Dense mass of cirro-strati and haze; solar halo lately. |
| 5 0 | 425 | 52·0 | 47·3 | 4·7 | 0·0 | 0·0 | 16 | 16 : — : — | 10·0 | Masses of scud; dense cirro-strati; snow on Cheviot. |
| 1 | 418 | 51·9 | 46·8 | 5·1 | 0·4 | 0·2 | 17 | 16 : — : — | 10·0 | Id.; id., hanging as if dripping. |
| 2 | 421 | 51·6 | 47·0 | 4·6 | 0·3 | 0·2 | 17 | 16 : — : — | 10·0 | Thick heavy scud; dense cirro-strati; drops of rain. |
| 3 | 449 | 45·3 | 42·6 | 2·7 | 1·3 | 1·2 | 19 | 18 : 18 : — | 10·0 | Patches of scud; dense semifluid cir.-str.; heavy shower. |
| 4 | 476 | 42·3 | 40·9 | 1·4 | 1·5 | 0·0 | 20 | | 10·0 | Homogeneous; light rain since 3h. |

The direction of the wind is indicated by the number of the point of the compass, reckoning N. = 0, E. = 8, S. = 16, W. = 24. The motions of the three strata of clouds, Sc. (scud), C.-s. (cirro-stratus), and Cir. (cirrus), are indicated in a similar manner.

April 3d 20h. The snow consists of small sharp-pointed six-rayed stars; the hail formed upon these and flat.

| Gött. Mean Time. | | Barometer at 32°. | Thermometers. Dry. | Wet. | Diff. | Wind. Maximum force in 1h. | 10m. | From | Clouds, Sc. : C.-s. : Ci., moving from | Sky clouded. | Species of Clouds and Meteorological Remarks. |
|---|---|---|---|---|---|---|---|---|---|---|---|
| d. | h. | in. | ° | ° | ° | lbs. | lbs. | pt. | pt. pt. pt. | 0—10. | |
| 5 | 5 | 29·481 | 42·1 | 40·0 | 2·1 | 0·0 | 0·0 | 20 | 18 : 14 : — | 9·7 | Patches of scud ; dense cirro-strati. |
| | 6 | 502 | 42·8 | 40·8 | 2·0 | 0·0 | 0·0 | | 22 : 15 : — | 8·0 | Id. ; cirro-strati and cirrous clouds. |
| | 7 | 520 | 40·5 | 39·0 | 1·5 | 0·0 | 0·0 | | — : — : 14 | 3·0 | Varieties of cirri lying SSW. to NNE. ; cir.-str. ; scud. |
| | 8 | 550 | 38·2 | 37·2 | 1·0 | 0·0 | 0·0 | | | 0·7 | Linear cirri and cir.-str. ; mass of scud to E. |
| | 9 | 567 | 34·8 | 34·5 | 0·3 | 0·0 | 0·0 | | | 0·5 | Cirro-strati on E. horizon. |
| | 10 | 590 | 32·9 | 32·8 | 0·1 | 0·0 | 0·0 | | | 0·9 | Haze on E. horizon. |
| | 11 | 626 | 31·2 | 30·9 | 0·3 | 0·0 | 0·0 | | | 0·2 | Streak of cloud on E., and patch on W., horizon. |
| | 12 | 640 | 29·0 | 28·9 | 0·1 | 0·0 | 0·0 | | | 0·2 | As before ; aurora. |
| | 13 | 29·659 | 29·7 | 29·9 | ... | 0·0 | 0·0 | | | 0·2 | Cirro-strati and fog to S. ; aurora. |
| | 14 | 670 | 28·9 | 29·9 | ... | 0·0 | 0·0 | | 20 : — : — | 0·5 | Loose cumuli to S. |
| | 15 | 690 | 29·2 | 29·8 | ... | 0·0 | 0·0 | | 22 : — : — | 0·2 | Scud. |
| | 16 | 708 | 29·2 | ... | ... | 0·0 | 0·0 | | 20 : — : — | 1·5 | Cirro-stratous scud. |
| | 17 | 718 | 30·2 | 30·1 | 0·1 | 0·0 | 0·0 | | 14 : — : — | 0·3 | Scud ; cirri, tinged with red ; hoar-frost. |
| | 18 | 743 | 26·3 | 26·5 | ... | 0·0 | 0·0 | 18 | 14 : — : — | 1·0 | Patches of scud ; scud on horizon ; red to E. |
| | 19 | 769 | 30·3 | 30·3 | ... | 0·0 | 0·0 | 22 | | 0·2 | Cirro-strati, cumuli, and patches of scud ; haze to E. |
| | 20 | 788 | 32·8 | 32·4 | 0·4 | 0·0 | 0·0 | | | 0·5 | Cirrous haze, cirro-cumuli, and patches of scud. |
| | 21 | 811 | 35·5 | 34·4 | 1·1 | 0·0 | 0·0 | | | 0·2 | Patches of cirro-strati. |
| | 22 | 815 | 40·0 | 38·4 | 1·6 | 0·0 | 0·0 | | | 0·9 | Cumuli in haze on E. horizon. |
| | 23 | 830 | 45·1 | 42·4 | 2·7 | 0·1 | 0·0 | | 12 : — : — | 1·0 | Cirro-stratous scud ; cum. and haze to NE. ; cir.-cum. |
| 6 | 0 | 837 | 47·5 | 44·0 | 3·5 | 0·2 | 0·0 | 4 | | 1·0 | Cumuli and cirro-cumuli to S. and E. |
| | 1 | 843 | 49·5 | 45·1 | 4·4 | 0·4 | 0·3 | 4 | | 1·0 | Scud and loose cumuli ; haze on E. horizon. |
| | 2 | 851 | 50·0 | 44·6 | 5·4 | 0·5 | 0·3 | 6 | | 1·5 | Woolly cirri, cirro-strati, cumuli, scud ; haze on E. hor. |
| | 3 | 855 | 50·0 | 43·7 | 6·3 | 0·3 | 0·5 | 5 | 14 : — : — | 4·0 | Cirro-cumulo-strati ; cirro-strati. |
| | 4 | 858 | 49·0 | 43·3 | 5·7 | 0·4 | 0·3 | 6 | | 9·0 | Id. ; id. |
| | 5 | 868 | 46·9 | 43·1 | 3·8 | 0·4 | 0·2 | 6 | | 9·9 | Thick cirro-stratous scud, cirro-cumuli, cirro-strati. |
| | 6 | 880 | 46·7 | 44·0 | 2·7 | 0·1 | 0·1 | 6 | 2 : 14 : — | 9·0 | Patches of scud ; hazy cirro-strati ; mottled cirri, &c. |
| | 7 | 882 | 45·8 | 43·7 | 2·1 | 0·2 | 0·1 | 6 | 6 : 14 : — | 8·7 | Loose scud ; cirro-stratous scud ; woolly cirri. |
| | 8 | 897 | 43·9 | 42·8 | 1·1 | 0·1 | 0·0 | 4 | 5 : — : — | 10·0 | Scud. |
| | 9 | 911 | 43·8 | 42·8 | 1·0 | 0·0 | 0·0 | | 5 : — : — | 9·7 | Id. ; sky to NW. |
| | 10 | 910 | 43·2 | 42·5 | 0·7 | 0·0 | 0·0 | | | 9·5 | Cirrous clouds. |
| | 11 | 919 | 43·1 | 42·1 | 1·0 | 0·0 | 0·0 | | | 10·0 | Id. |
| | 12 | 914 | 42·2 | 41·8 | 0·4 | 0·0 | 0·0 | | | 10·0 | Dark. |
| | 23 | 29·948 | ... | ... | ... | 0·2 | ... | 14 | | | |
| 7 | 13 | 29·983 | 43·2 | 41·1 | 2·1 | 0·0 | 0·0 | | | 4·0 | Sky covered with haze ; stars dim. |
| | 14 | 987 | 43·9 | 41·6 | 2·3 | 0·0 | 0·0 | | | 3·0 | Id. |
| | 15 | 995 | 41·9 | 40·3 | 1·6 | 0·0 | 0·0 | | | 3·0 | Id. |
| | 16 | 998 | 40 0 | 38·9 | 1·1 | 0·0 | 0·0 | | | 2·0 | Clear in zenith ; lunar halo. |
| | 17 | 29·998 | 42·4 | 41·3 | 1·1 | 0·7 | 0·3 | 21 | | 6·0 | Cirrous haze and patches of scud. |
| | 18 | 30·017 | 44·1 | 43·0 | 1·1 | 0·6 | 0·3 | | 20 : — : — | 10·0 | Scud. |
| | 19 | 036 | 45·6 | 44·2 | 1·4 | 0·3 | 0·3 | 23 | 22 : — : — | 10·0 | Thick scud, nearly homogeneous. |
| | 20 | 051 | 46·2 | 45·0 | 1·2 | 0·5 | 0·4 | 20 | 21 : — : — | 10·0 | Loose scud. |
| | 21 | 068 | 48·3 | 46·7 | 1·6 | 1·1 | 0·6 | 20 | 20 : — : — | 10·0 | Misty loose scud. |
| | 22 | 074 | 51·0 | 48·3 | 2·7 | 0·9 | 0·9 | 19 | 21 : — : — | 9·9 | Scud ; cirro-strati. |
| | 23 | 088 | 51·2 | 48·2 | 3·0 | 0·7 | 0·3 | 20 | 21 : — : — | 10·0 | Id. ; id. |
| 8 | 0 | 092 | 54·3 | 50·6 | 3·7 | 1·5 | 0·9 | 20 | 21 : — : — | 10·0 | Id. ; id. |
| | 1 | 079 | 53·7 | 50·0 | 3·7 | 2·0 | 0·5 | | 22 : 25 : 28 | 8·5 | Thin scud ; cirro-stratous scud ; woolly cirri. |
| | 2 | 089 | 54·4 | 50·3 | 4·1 | 1·4 | 1·8 | 21 | — : 26 : — | 8·0 | Cirro-stratous scud and cirro-strati ; scud and cumuli. |
| | 3 | 092 | 55·7 | 51·4 | 4·3 | 1·3 | 0·6 | 21 | 22 : 28 : 28 | 8·0 | Loose scud ; cirro-strati and cirri. |
| | 4 | 110 | 55·6 | 51·3 | 4·3 | 0·8 | 0·5 | 22 | 22 : — : — | 8·0 | Id. ; patches of woolly cirri ; cirro-strati. |
| | 5 | 112 | 54·9 | 51·0 | 3·9 | 1·2 | 0·4 | 20 | 22 : — : — | 8·0 | Id. ; woolly cirri. |
| | 6 | 122 | 52·7 | 50·2 | 2·5 | 0·8 | 0·1 | 19 | 22 : — : — | 9·0 | Scud ; cirro-strati and cirrous clouds. |
| | 7 | 130 | 50·9 | 49·1 | 1·8 | 0·4 | 0·1 | 20 | 24 : — : — | 9·0 | Id. ; id. |
| | 8 | 134 | 48·0 | 47·0 | 1·0 | 0·2 | 0·1 | 20 | 22 : — : — | 3·0 | Thin misty scud ; patches of curled cirri. |
| | 9 | 152 | 48·6 | 47·4 | 1·2 | 0·2 | 0·2 | 19 | | 10·0 | |
| | 10 | 148 | 48·5 | 47·4 | 1·1 | 0·2 | 0·1 | 19 | | 10·0 | |

The direction of the wind is indicated by the number of the point of the compass, reckoning N. = 0, E. = 8, S. = 16, W. = 24. The motions of the three strata of clouds, Sc. (scud), C.-s. (cirro-stratus), and Cir. (cirrus), are indicated in a similar manner.

| Gött. Mean Time. | Barometer at 32°. | Thermometers. Dry. | Wet. | Diff. | Wind. Maximum force in 1h. | 10m. | From | Clouds, Sc. : C.-s. : Ci., moving from | Sky clouded. | Species of Clouds and Meteorological Remarks. |
|---|---|---|---|---|---|---|---|---|---|---|
| d. h. | in. | ° | ° | ° | lbs. | lbs. | pt. | pt. pt. pt. | 0—10. | |
| 8 11 | 30·152 | 47·7 | 46·8 | 0·9 | 0·2 | 0·1 | 18 | | 6·0 | Cirrous clouds and scud; stars rather dim. |
| 12 | 146 | 46·0 | 45·8 | 0·2 | 0·4 | 0·3 | 18 | | 0·7 | Thin scud near horizon, chiefly to N. |
| 13 | 30·150 | 47·0 | 46·7 | 0·3 | 0·3 | 0·0 | 18 | | 2·0 | Thin scud passing zenith. |
| 14 | 153 | 48·7 | 47·9 | 0·8 | 0·5 | 0·2 | 22 | | 10·0 | Scud. |
| 15 | 146 | 48·7 | 47·9 | 0·8 | 0·0 | 0·0 | 19 | 24 : — : — | 9·0 | Thin scud. |
| 16 | 139 | 49·1 | 47·9 | 1·2 | 0·1 | 0·0 | | 24 : — : — | 9·7 | Id. |
| 17 | 141 | 49·4 | 48·3 | 1·1 | 0·2 | 0·1 | 22 | | 9·7 | Id. |
| 18 | 158 | 48·8 | 48·0 | 0·8 | 0·2 | 0·0 | 18 | | 10·0 | Id. |
| 19 | 161 | 49·2 | 48·3 | 0·9 | 0·0 | 0·0 | | 22 : — : — | 10·0 | Scud; shower to ESE. |
| 20 | 170 | 49·9 | 48·8 | 1·1 | 0·1 | 0·0 | 23 | 22 : — : — | 10·0 | Id. |
| 21 | 173 | 52·0 | 50·0 | 2·0 | 0·3 | 0·6 | 22 | 21 : — : — | 10·0 | Id. |
| 22 | 170 | 53·5 | 51·1 | 2·4 | 0·3 | 1·0 | 24 | 21 : — : — | 10·0 | Id. |
| 23 | 176 | 55·2 | 52·2 | 3·0 | 1·2 | 0·6 | 19 | 24 : — : — | 10·0 | Id.; cirri; cirro-strati; woolly cirri to SE. |
| 9 0 | 187 | 56·3 | 53·0 | 3·3 | 0·9 | 0·1 | 21 | 23 : — : — | 10·0 | Id.; cirrous clouds. |
| 1 | 177 | 59·0 | 55·0 | 4·0 | 0·3 | 0·6 | 19 | 23 : — : — | 8·0 | Loose cumuli and scud; woolly cirri, cirro-strati. |
| 2 | 176 | 57·5 | 54·0 | 3·5 | 1·3 | 0·4 | 21 | | 9·5 | Id.; id. |
| 3 | 173 | 60·1 | 55·1 | 5·0 | 0·4 | 0·3 | 21 | — : — : 23 | 8·0 | Cumuli, cumulo-strati, cirro-strati; woolly cirri. |
| 4 | 170 | 59·4 | 54·7 | 4·7 | 0·5 | 0·5 | 20 | — : 23 : — | 9·0 | Woolly cirro-cumuli; linear cirri and cirro-strati. |
| 5 | 175 | 54·4 | 52·7 | 1·7 | 0·5 | 0·1 | 21 | — : 24 : — | 9·7 | Cir.-str. scud; cirro-strati; cumuli; patches of scud. |
| 6 | 169 | 55·0 | 52·6 | 2·4 | 0·3 | 0·3 | 20 | 21 : 22 : — | 9·0 | Scud; cirro-cumulo-strati. |
| 7 | 174 | 53·3 | 51·5 | 1·8 | 0·3 | 0·2 | 20 | 20 : 22 : — | 9·0 | Thin misty scud; scud and cirro-cumulo-strati. |
| 8 | 185 | 51·1 | 49·9 | 1·2 | 0·3 | 0·1 | 20 | | 10·0 | Thin misty scud over the sky. |
| 9 | 192 | 50·3 | 49·1 | 1·2 | 0·0 | 0·0 | 20 | | 9·0 | Thin misty scud; cirrous clouds. |
| 10 | 194 | 50·1 | 49·1 | 1·0 | 0·7 | 0·0 | 20 | | 10·0 | Scud; very dark; slight drizzle of rain. |
| 11 | 185 | 49·9 | 48·8 | 1·1 | 0·5 | 0·1 | 20 | | 10·0 | Id.; id. |
| 12 | 180 | 49·7 | 48·4 | 1·3 | 0·3 | 0·1 | 22 | | 10·0 | Id.; id. |
| 13 | 30·171 | 49·6 | 48·0 | 1·6 | 0·1 | 0·0 | 20 | | 9·5 | A few stars visible to SE. |
| 14 | 165 | 49·5 | 47·7 | 1·8 | 0·1 | 0·1 | 25 | | 9·5 | Sky to S. |
| 15 | 150 | 46·9 | 45·0 | 1·9 | 0·3 | 0·4 | 21 | | 0·5 | Sky pretty clear; cirro-strati on horizon. |
| 16 | 144 | 45·1 | 43·3 | 1·8 | 0·6 | 0·2 | 25 | | 0·2 | Id.; id. |
| 17 | 131 | 44·3 | 41·1 | 3·2 | 0·6 | 0·2 | 20 | | 0·5 | Cirro-strati, cirri, and cirrous haze on horizon. |
| 18 | 138 | 41·9 | 39·2 | 2·7 | 0·1 | 0·0 | | | 0·2 | Id. |
| 19 | 131 | 43·0 | 39·9 | 3·1 | 0·2 | 0·1 | 20 | | 0·1 | Id. |
| 20 | 116 | 44·4 | 41·5 | 2·9 | 0·2 | 0·1 | 20 | | 0·2 | Id. |
| 21 | 106 | 46·3 | 43·6 | 2·7 | 0·5 | 0·2 | 19 | | 0·3 | Cirro-strati to NW.; haze on horizon. |
| 22 | 090 | 48·7 | 45·0 | 3·7 | 0·2 | 0·2 | 18 | | 0·3 | Id., id. |
| 23 | 078 | 50·2 | 47·4 | 2·8 | 0·2 | 0·2 | 19 | | 0·3 | Cirro-cumuli, cirro-strati; patches of thin scud. |
| 10 0 | 047 | 53·2 | 51·5 | 1·7 | 0·7 | 0·9 | 18 | | 0·2 | Cirro-cumuli and cirro-strati; haze on horizon. |
| 1 | 032 | 55·3 | 47·5 | 7·8 | 0·7 | 0·2 | 21 | | 0·2 | Woolly cirri to NW.; hazy on horizon. |
| 2 | 30·003 | 57·1 | 48·2 | 8·9 | 0·3 | 0·7 | 19 | | 0·3 | Id.; id. |
| 3 | 29·956 | 57·6 | 48·6 | 9·0 | 0·9 | 0·5 | 20 | | 0·3 | Id.; id. |
| 4 | 936 | 58·1 | 49·2 | 8·9 | 1·0 | 1·1 | 20 | | 0·5 | Id.; id. |
| 5 | 913 | 56·9 | 46·3 | 10·6 | 1·8 | 0·8 | 20 | — : — : 20 | 1·5 | Id.; id. |
| 6 | 894 | 53·0 | 43·2 | 9·8 | 0·6 | 0·3 | 20 | — : — : 22 | 3·0 | Woolly cirri and cir.-str.; thick cirrous haze on E. hor. |
| 7 | 878 | 50·1 | 43·0 | 7·1 | 0·7 | 0·2 | 21 | — : — : 20 | 2·0 | Id.; id. |
| 8 | 851 | 44·9 | 39·7 | 5·2 | 0·4 | 0·0 | 20 | | 0·5 | Woolly cirri to NW. |
| 9 | 824 | 42·4 | 37·7 | 4·7 | 0·4 | 0·3 | 18 | | 0·5 | Cirri and cirro-strati to NW. |
| 10 | 799 | 41·8 | 37·5 | 4·3 | 0·6 | 0·3 | 19 | | 0·2 | Streaks of cirro-strati to N. |
| 11 | 777 | 42·6 | 37·8 | 4·8 | 0·5 | 0·3 | 20 | | 0·9 | Id. |
| 12 | 750 | 37·1 | 34·7 | 2·4 | 0·4 | 0·0 | | | 0·9 | Id. |
| 13 | 29·713 | 41·0 | 36·2 | 3·8 | 0·1 | 0·0 | | | 0·9 | Streaks of cirro-strati to N.; lighter on N. horizon. |
| 14 | 675 | 39·1 | 34·5 | 4·6 | 0·1 | 0·0 | | | 0·9 | Id. |
| 15 | 639 | 41·3 | 35·2 | 6·1 | 0·3 | 0·0 | | | 0·2 | Patches of scud; flash of lightning seen to SE. |
| 16 | 611 | 41·3 | 37·3 | 4·0 | 0·0 | 0·5 | 19 | | 10·0 | Scud; a few drops of rain. |
| 17 | 582 | 43·3 | 41·3 | 2·0 | 0·7 | 0·8 | 19 | 20 : — : — | 9·9 | Id.; cirro-strati to E., tinged with red; light rain. |

The direction of the wind is indicated by the number of the point of the compass, reckoning N. = 0, E. = 8, S. = 16, W. = 24. The motions of the three strata of clouds, Sc. (scud), C.-s. (cirro-stratus), and Cir. (cirrus), are indicated in a similar manner.

| Gött. Mean Time. | | Barometer at 32°. | Thermometers. | | | Wind. | | | Clouds, Sc. : C.-s. : Ci., moving from | Sky clouded. | Species of Clouds and Meteorological Remarks. |
|---|---|---|---|---|---|---|---|---|---|---|---|
| | | | Dry. | Wet. | Diff. | Maximum force in 1h. | Maximum force in 10m. | From | | | |
| d. | h. | in. | ° | ° | ° | lbs. | lbs. | pt. | pt. pt. pt. | 0—10. | |
| 10 | 18 | 29·574 | 43·4 | 42·1 | 1·3 | 0·7 | 0·2 | 19 | 21 : — : — | 9·9 | Scud ; cirro-strati to E., tinged with red ; light rain. |
| | 19 | 564 | 43·2 | 41·0 | 2·2 | 0·2 | 0·5 | 19 | 22 : — : — | 2·0 | Loose ragged scud and cum. to E. ; cir.-str. lying SSW. |
| | 20 | 575 | 44·4 | 41·7 | 2·7 | 0·9 | 0·5 | 19 | 21 : — : — | 3·0 | Scud ; cum. on SE. hor. ; cir.-str. to E. [to NNE. |
| | 21 | 571 | 46·6 | 43·0 | 3·6 | 1·6 | 1·9 | 18 | 21 : — : — | 9·0 | Id. ; cirrous haze to E. ; wind in gusts. |
| | 22 | 572 | 47·9 | 43·3 | 4·6 | 1·2 | 2·0 | 20 | 21 : 23 : 19 | 7·0 | Id., two currents ; cirri ; drops of rain. |
| | 23 | 568 | 51·6 | 46·9 | 4·7 | 2·9 | 1·6 | 20 | 22 : — : — | 9·7 | Id. ; cirri and cirro-strati. |
| 11 | 0 | 562 | 51·1 | 46·2 | 4·9 | 3·0 | 1·8 | 20 | 22 : 24 : 20 | 9·5 | Thick scud ; cirro-stratous scud ; cirri ; rain to NW. |
| | 1 | 554 | 50·1 | 45·4 | 4·7 | 1·7 | 1·3 | 20 | 24 : — : — | 6·0 | Scud and loose cumuli ; passing showers. |
| | 2 | 564 | 52·0 | 46·0 | 6·0 | 1·3 | 0·5 | 21 | 24 : — : — | 7·0 | Id. |
| | 3 | 553 | 54·7 | 45·9 | 8·8 | 1·5 | 0·8 | 23 | 24 : — : — | 4·0 | Cumuli. |
| | 4 | 560 | 54·1 | 45·1 | 9·0 | 2·3 | 0·7 | 24 | 25 : — : — | 3·0 | Id. ; cirrus to W. [to E. |
| | 5 | 576 | 53·2 | 44·0 | 9·2 | 2·0 | 0·8 | 24 | 25 : — : — | 2·0 | Cumuli ; patches of woolly cirrus to SE. ; cirrous haze |
| | 6 | 582 | 49·5 | 43·3 | 6·2 | 1·3 | 1·0 | 25 | 24 : — : — | 3·0 | Cumuli and cir.-str. scud ; woolly cirri ; cirrous haze. |
| | 7 | 608 | 46·8 | 40·5 | 6·3 | 1·0 | 0·2 | 24 | 24 : — : — | 1·0 | Cirro-stratous scud ; cumuli and cumulo-strati on hor. |
| | 8 | 621 | 43·6 | 38·7 | 4·9 | 1·0 | 0·1 | 20 | 25 : — : — | 0·5 | Scud ; hazy round horizon. |
| | 9 | 638 | 42·4 | 38·3 | 4·1 | 0·2 | 0·0 | | | 0·1 | Patches of scud to S. ; haze on N. and E. horizon. |
| | 10 | 638 | 39·2 | 36·8 | 2·4 | 0·0 | 0·0 | | | 0·0 | Clear. |
| | 11 | 645 | 40·4 | 37·3 | 3·1 | 0·0 | 0·0 | 24 | | 0·1 | Streak of cirrus to S. |
| | 12 | 646 | 39·3 | 36·9 | 2·4 | 0·1 | 0·1 | 20 | | 0·5 | Scud to S. ; clear. |
| | 13 | 29·643 | 42·2 | 39·1 | 3·1 | 0·2 | 0·1 | 20 | | 4·0 | Scud and cirrous clouds ; stars dim. |
| | 14 | 638 | 41·4 | 38·7 | 2·7 | 0·4 | 0·1 | 21 | | 0·7 | Id.* |
| | 15 | 632 | 38·2 | 36·8 | 1·4 | 0·2 | 0·1 | 19 | 22 : — : — | 2·0 | Scud. |
| | 16 | 627 | 39·6 | 38·0 | 1·6 | 0·2 | 0·1 | 19 | | 1·2 | Id. [NNW to SSE. |
| | 17 | 611 | 39·0 | 37·3 | 1·7 | 0·3 | 0·0 | 20 | 24 : — : — | 3·5 | Id. ; mottled and linear cirri lying in bands from |
| | 18 | 609 | 40·0 | 38·4 | 1·6 | 0·2 | 0·1 | | 24 : — : — | 9·0 | Id. ; id. |
| | 19 | 609 | 41·9 | 39·5 | 2·4 | 0·4 | 0·1 | 19 | — : 25 : 24 | 7·0 | Cirro-stratous scud ; cirri ; cirro-strati to E. and SE. |
| | 20 | 603 | 42·3 | 40·0 | 2·3 | 0·2 | 0·1 | 20 | — : — : 28 | 9·0 | Cirri lying NNW. to SSE. ; cumuli, cum.-str. ; scud. |
| | 21 | 578 | 45·0 | 42·0 | 3·0 | 0·4 | 0·8 | 20 | 20 : — : — | 7·0 | Masses of scud ; cirri, cirrous haze ; solar halo. |
| | 22 | 560 | 47·9 | 42·6 | 5·3 | 1·4 | 0·8 | 20 | 22 : — : — | 7·0 | Scud ; linear cirri. |
| | 23 | 531 | 50·3 | 45·1 | 5·2 | 1·3 | 0·8 | 20 | 21 : — : — | 9·9 | Id. ; cumuli on E. horizon ; linear cirri to E. |
| 12 | 0 | 503 | 49·2 | 46·0 | 3·2 | 1·4 | 1·1 | 17 | 21 : — : — | 10·0 | Id. ; dense cirro-strati ; a few drops of rain. |
| | 1 | 492 | 46·0 | 43·0 | 3·0 | 2·5 | 1·3 | 19 | 18 : — : — | 10·0 | Id. ; cirrous clouds ; light rain. |
| | 2 | 452 | 46·1 | 43·0 | 3·1 | 1·9 | 0·5 | 19 | 19 : — : — | 10·0 | Id. |
| | 3 | 416 | 47·6 | 44·5 | 3·1 | 1·4 | 0·6 | 19 | 19 : — : — | 10·0 | Id. |
| | 4 | 384 | 49·0 | 46·1 | 2·9 | 0·9 | 1·0 | 20 | 20 : — : — | 10·0 | Id. ; a few drops of rain. |
| | 5 | 360 | 47·9 | 46·1 | 1·8 | 0·9 | 0·5 | | | 10·0 | Id. ; light drizzle. |
| | 6 | 342 | 46·8 | 46·2 | 0·6 | 0·5 | 0·1 | 18 | 20 : — : — | 10·0 | Id. |
| | 7 | 326 | 47·8 | 46·4 | 1·4 | 0·2 | 0·1 | 18 | 19 : 20 : — | 9·7 | Id., two currents ; cirri. |
| | 8 | 317 | 47·1 | 45·8 | 1·3 | 0·0 | 0·0 | 18 | | 9·7 | Id. |
| | 9 | 320 | 46·2 | 45·1 | 1·1 | 0·0 | 0·0 | | | 10·0 | Id. |
| | 10 | 315 | 41·4 | 41·0 | 0·4 | 0·0 | 0·0 | | | 3·5 | Id. |
| | 11 | 298 | 42·0 | 41·9 | 0·1 | 0·0 | 0·0 | | | 3·0 | Id. ; cirrous clouds. |
| | 12 | 304 | 42·3 | 41·9 | 0·4 | 0·0 | 0·0 | | | 8·0 | Id. ; id. |
| | 13 | 29·310 | 42·9 | 42·6 | 0·3 | 0·0 | 0·0 | | | 10·0 | |
| | 14 | 313 | 44·3 | 43·4 | 0·9 | 0·0 | 0·0 | | | 10·0 | |
| | 15 | 320 | 44·4 | 43·0 | 1·4 | 0·0 | 0·0 | | | 7·0 | Thin clouds ; stars dim. |
| | 16 | 323 | 44·2 | 42·6 | 1·6 | 0·0 | 0·0 | | | 3·0 | Scud to E. ; thin scud to S. and W. |
| | 17 | 322 | 42·0 | 41·0 | 1·0 | 0·0 | 0·0 | | — : 24 : — | 1·0 | Masses of cirro-stratous scud and cirro-strati. |
| | 18 | 335 | 43·6 | 41·9 | 1·7 | 0·2 | 0·0 | 21 | | 1·0 | Masses of scud and cirro-strati. |
| | 19 | 352 | 45·3 | 43·0 | 2·3 | 0·1 | 0·0 | 21 | 24 : 24 : — | 2·5 | Thin scud ; cirro-stratous scud. |
| | 20 | 360 | 48·0 | 45·0 | 3·0 | 0·0 | 0·1 | 21 | 25 : — : — | 9·0 | Id. ; fine cirri ; very light drizzle. |
| | 21 | 368 | 50·9 | 46·9 | 4·0 | 0·2 | 0·2 | 21 | 25 : — : — | 9·5 | Id. ; woolly cirri ; scud very dense to W. |
| | 22 | 377 | 51·6 | 45·4 | 6·2 | 0·6 | 0·4 | | | 8·0 | Id. |
| | 23 | 374 | 54·3 | 47·9 | 6·4 | 0·6 | 0·3 | 19 | 24 : — : — | 8·0 | Id. ; id. ; cumuli, cumulo-strati. |
| 13 | 0 | 374 | 54·5 | 47·2 | 7·3 | 0·5 | 0·4 | 27 | 25 : — : — | 8·0 | Scud ; woolly cirri ; loose cumuli. |
| | 1 | 378 | 54·4 | 47·2 | 7·2 | 1·1 | 0·3 | 22 | | 9·0 | Id. ; id. ; id. |

The direction of the wind is indicated by the number of the point of the compass, reckoning N. = 0, E. = 8, S. = 16, W. = 24. The motions of the three strata of clouds, Sc. (scud), C.-s. (cirro-stratus), and Cir. (cirrus), are indicated in a similar manner.

* See additional meteorological notes after the *Hourly Meteorological Observations*.

| Gött. Mean Time. | Barometer at 32°. | Thermometers. Dry. | Wet. | Diff. | Wind. Maximum force in 1h. | 10m. | From | Clouds, Sc. : C.-s. : Ci., moving from | Sky clouded. | Species of Clouds and Meteorological Remarks. |
|---|---|---|---|---|---|---|---|---|---|---|
| d. h. | in. | ° | ° | ° | lbs. | lbs. | pt. | pt. pt. pt. | 0—10. | |
| 13 2 | 29·384 | 55·9 | 48·6 | 7·3 | 1·1 | 0·3 | 21 | 24 : 25 : — | 7·5 | Scud, two currents; linear cirri, cirrous haze; showers. |
| 3 | 378 | 56·8 | 48·3 | 8·5 | 1·2 | 0·8 | 21 | 24 : — : — | 8·5 | Id.; woolly cirri; cumuli; showers to N. |
| 4 | 377 | 55·2 | 48·1 | 7·1 | 1·4 | 1·3 | 20 | 24 : — : — | 9·0 | Id., cumuli, cum.-str., nimbi; cirrous haze; showers. |
| 5 | 358 | 53·5 | 48·1 | 5·4 | 1·9 | 1·0 | 20 | 24 : — : — | 10·0 | Id.; dense hazy cirrous mass; solar halo. |
| 6 | 362 | 52·0 | 46·0 | 6·0 | 0·8 | 0·9 | 20 | 24 : — : — | 10·0 | Masses of scud; dense cirro-strati. |
| 7 | 371 | 50·0 | 45·3 | 4·7 | 0·8 | 0·3 | 23 | 24 : — : — | 10·0 | Id.; id.; drops of rain. |
| 8 | 371 | 46·6 | 44·0 | 2·6 | 0·8 | 0·0 | 21 | | 10·0 | Dense mass of cirro-strati; light shower. |
| 9 | 371 | 46·0 | 43·7 | 2·3 | 0·0 | 0·0 | | | 9·8 | Scud and cirro-strati; sky to W. |
| 10 | 368 | 45·9 | 43·6 | 2·3 | 0·2 | 0·0 | | | 10·0 | Dark. |
| 11 | 361 | 45·9 | 43·3 | 2·6 | 0·3 | 0·1 | | | 10·0 | Id. |
| 12 | 371 | 45·8 | 43·0 | 2·8 | 0·3 | 0·1 | 21 | | 9·0 | Sky to N. and E. |
| 23½ | 29·568 | ... | ... | ... | 1·2 | ... | 25 | | | |
| 14 13 | 29·639 | 49·0 | 48·5 | 0·5 | 0·0 | 0·0 | | | 10·0 | Dark; slight rain. |
| 14 | 641 | 50·7 | 49·5 | 1·2 | 0·4 | 0·3 | 20 | | 10·0 | Id.; rain ceased after 13h; wind rose at 13h 45m. |
| 15 | 632 | 50·3 | 48·9 | 1·4 | 0·5 | 0·2 | 20 | | 10·0 | Id. |
| 16 | 636 | 49·6 | 48·1 | 1·5 | 0·2 | 0·1 | 20 | | 10·0 | Clouds a little broken. |
| 17 | 629 | 49·0 | 47·8 | 1·2 | 0·2 | 0·1 | 20 | 20 : — : — | 9·5 | Scud moving rather quickly; cirrous clouds. |
| 18 | 636 | 49·1 | 48·1 | 1·0 | 0·5 | 0·1 | 18 | 20 : — : — | 9·7 | Scud; cirro-strati and other cirrous clouds; light rain. |
| 19 | 634 | 49·2 | 48·0 | 1·2 | 0·3 | 0·1 | 19 | 20 : — : — | 10·0 | Thick smoky scud. |
| 20 | 634 | 49·9 | 47·8 | 2·1 | 0·6 | 0·2 | 18 | 20 : — : — | 10·0 | Id. |
| 21 | 627 | 51·0 | 48·2 | 2·8 | 1·0 | 0·5 | 19 | 20 : — : — | 10·0 | Id. |
| 22 | 619 | 53·4 | 49·1 | 4·3 | 2·2 | 3·1 | 19 | 21 : — : — | 9·0 | Scud; woolly cirri. |
| 23 | 617 | 53·9 | 49·5 | 4·4 | 3·2 | 2·2 | 20 | 21 : — : — | 9·0 | Id.; id.; cirro-strati. |
| 15 0 | 597 | 54·8 | 50·0 | 4·8 | 2·3 | 2·3 | 19 | 20 : — : — | 9·5 | Id.; cirri and cirro-strati to S.; loose cumuli to E. |
| 1 | 602 | 54·2 | 49·4 | 4·8 | 4·0 | 2·6 | 19 | | 9·0 | Id.; id. |
| 2 | 604 | 55·9 | 52·1 | 3·8 | 2·9 | 1·6 | 19 | 20 : — : — | 10·0 | Id.; cirrous clouds; very light rain. |
| 3 | 612 | 52·3 | 49·6 | 2·7 | 2·6 | 1·4 | 19 | 20 : — : — | 10·0 | Id.; cirro-strati. |
| 4 | 621 | 52·3 | 49·7 | 2·6 | 2·0 | 0·6 | 18 | 19 : — : — | 10·0 | Id.; a few drops of rain. |
| 5 | 637 | 51·1 | 48·2 | 2·9 | 1·1 | 0·1 | 20 | 21 : — : — | 9·5 | Id.; woolly cirri; light shower since 4h; rain to E. |
| 6 | 655 | 53·1 | 48·1 | 5·0 | 0·2 | 0·2 | 22 | 22 : — : 20 | 9·5 | Id.; id.; cir.-str., cum.-str. to E.; thundery-looking to SW. |
| 7 | 676 | 51·1 | 45·3 | 5·8 | 0·2 | 0·0 | 22 | 25 : 20 : 20 | 9·5 | Thin scud; cir.-str. scud; wo. cirri; scud gone off to SE. |
| 8 | 716 | 49·3 | 45·1 | 4·2 | 0·0 | 0·0 | | | 9·5 | As before. |
| 9 | 733 | 47·7 | 43·2 | 4·5 | 0·0 | 0·0 | | | 9·5 | Id. |
| 10 | 755 | 45·6 | 42·6 | 3·0 | 0·0 | 0·0 | | | 9·7 | Scud and cirrous clouds. |
| 11 | 756 | 43·6 | 40·8 | 2·8 | 0·0 | 0·0 | | | 8·0 | Id. |
| 12 | 773 | 41·7 | 40·1 | 1·6 | 0·0 | 0·0 | | | 8·0 | Id. |
| 13 | 29·792 | 40·7 | 38·1 | 2·6 | 0·0 | 0·0 | | | 2·0 | Stars dim. |
| 14 | 803 | 36·1 | 35·6 | 0·5 | 0·0 | 0·0 | | | 2·0 | Id. |
| 15 | 817 | 34·9 | 34·7 | 0·2 | 0·0 | 0·0 | | | 0·5 | Id. |
| 16 | 820 | 33·6 | 33·0 | 0·6 | 0·0 | 0·0 | | | 0·5 | Clear; cirro-strati to E. |
| 17 | 827 | 34·5 | 33·7 | 0·8 | 0·0 | 0·0 | 20 | | 0·2 | Id.; id. |
| 18 | 842 | 32·9 | 32·0 | 0·9 | 0·0 | 0·0 | | | 0·2 | Cirrous haze on E. hor.; cir.-str. to W.; hoar frost. |
| 19 | 857 | 37·2 | 35·7 | 1·5 | 0·0 | 0·0 | 20 | — : — : 28 | 3·0 | Woolly and linear cirri. |
| 20 | 866 | 43·6 | 40·5 | 3·1 | 0·0 | 0·0 | 18 | — : — : 28 | 4·0 | Id. |
| 21 | 866 | 46·5 | 42·9 | 3·6 | 0·5 | 0·3 | 20 | | 4·0 | Id. |
| 22 | 881 | 50·1 | 45·0 | 5·1 | 0·7 | 0·8 | 20 | 22 : — : 28 | 5·0 | Scud; linear cirri and cirrous haze. |
| 23 | 881 | 52·1 | 46·1 | 6·0 | 1·2 | 1·0 | 21 | | 5·0 | Scud and loose cum. to S. and E.; cirri and cir. haze. |
| 16 0 | 886 | 52·6 | 46·1 | 6·5 | 1·7 | 0·9 | 19 | 21 : — : 3 | 6·0 | Cir.-str. scud; cirrous haze; cir.-str.; loose cumuli. |
| 1 | 889 | 53·7 | 46·6 | 7·1 | 1·8 | 2·0 | 19 | 20 : 25 : — | 8·0 | Scud; cirro-strati and cymoid cirri; varieties of cirri. |
| 2 | 883 | 54·5 | 47·1 | 7·4 | 1·6 | 1·3 | 19 | — : 25 : — | 8·0 | Cir.-cum.-str., cir.-str.; scud; cirri; very wild looking. |
| 3 | 876 | 53·0 | 46·0 | 7·0 | 3·1 | 2·2 | 19 | — : 24 : — | 8·0 | Cir.-cum.-str.; cir.-str.; haze; patches of scud to E. |
| 4 | 894 | 52·7 | 45·3 | 7·4 | 2·3 | 1·8 | 19 | | 9·5 | Thick mass of cir.-str. and cir. clouds; sky to E. |
| 5 | 889 | 51·0 | 43·8 | 7·2 | 1·5 | 1·1 | 19 | | 9·2 | Id.; sky to E. and SW. |
| 6 | 900 | 50·0 | 43·6 | 6·4 | 1·6 | 1·5 | 19 | — : 24 : — | 9·5 | Cirro-strati and cirro-stratous scud. |
| 7 | 905 | 48·2 | 42·2 | 6·0 | 0·6 | 0·3 | 18 | — : 24 : — | 9·5 | Dark heavy cirro-strati. |

The direction of the wind is indicated by the number of the point of the compass, reckoning N. = 0, E. = 8, S. = 16, W. = 24. The motions of the three strata of clouds, Sc. (scud), C.-s. (cirro-stratus), and Cir. (cirrus), are indicated in a similar manner.

| Gött. Mean Time. | | Barometer at 32°. | Thermometers. Dry. | Wet. | Diff. | Wind. Maximum force in 1h. | 10m. | From | Clouds, Sc. : C.-s. : Ci., moving from | Sky clouded. | Species of Clouds and Meteorological Remarks. |
|---|---|---|---|---|---|---|---|---|---|---|---|
| d. | h. | in. | ° | ° | ° | lbs. | lbs. | pt. | pt. pt. pt. | 0—10. | |
| 16 | 8 | 29·896 | 47·4 | 41·3 | 6·1 | 0·8 | 0·5 | 18 | — : 24 : — | 9·0 | Thick semifluid cirro-stratous scud ; cirro-strati. |
| | 9 | 926 | 46·6 | 41·0 | 5·6 | 0·5 | 0·2 | 20 | — : 22 : — | 8·5 | Cirro-cumulo-strati ; cirro-strati. |
| | 10 | 927 | 44·0 | 40·9 | 3·1 | 0·1 | 0·0 | 18 | | 6·0 | Scud. |
| | 11 | 923 | 45·2 | 41·9 | 3·3 | 0·2 | 0·4 | 18 | | 5·0 | Id. |
| | 12 | 941 | 43·7 | 41·1 | 2·6 | 0·1 | 0·0 | | | 9·0 | Id. ; sky to E. |
| | 13 | 29·935 | 42·9 | 41·0 | 1·9 | 0·0 | 0·0 | | | 4·0 | Scud ; sky to E. |
| | 14 | 934 | 43·0 | 42·2 | 0·8 | 0·0 | 0·0 | | | 10·0 | Id. ; lightest to S. |
| | 15 | 928 | 44·8 | 42·9 | 1·9 | 0·0 | 0·0 | | | 10·0 | Id. ; very dark. |
| | 16 | 928 | 45·2 | 43·2 | 2·0 | 0·2 | 0·2 | 18 | | 10·0 | Id. ; id. |
| | 17 | 916 | 45·2 | 43·0 | 2·2 | 0·1 | 0·0 | | | 9·9 | Band of red-tinged sky to SE. |
| | 18 | 917 | 46·0 | 44·0 | 2·0 | 0·0 | 0·0 | | 20 : — : — | 10·0 | Scud. |
| | 19 | 919 | 46·0 | 44·0 | 2·0 | 0·0 | 0·0 | | | 10·0 | Id., nearly uniform covering. |
| | 20 | 929 | 46·6 | 44·6 | 2·0 | 0·3 | 0·3 | 18 | 20 : — : — | 10·0 | Id. |
| | 21 | 926 | 48·7 | 46·0 | 2·7 | 0·3 | 0·1 | 19 | | 10·0 | Misty scud. |
| | 22 | 911 | 52·2 | 48·3 | 3·9 | 0·3 | 0·2 | 19 | 19 : — : — | 9·9 | Id. |
| | 23 | 901 | 53·7 | 49·0 | 4·7 | 0·7 | 0·4 | 20 | 20 : — : — | 9·5 | Scud ; cirrous clouds. |
| 17 | 0 | 885 | 56·0 | 50·1 | 5·9 | 0·5 | 0·3 | 20 | 20 : — : — | 8·0 | Scud and loose cumuli ; cirri. |
| | 1 | 870 | 55·8 | 50·0 | 5·8 | 0·9 | 0·7 | | 18 : — : — | 5·0 | Id. ; woolly and linear cirri. |
| | 2 | 863 | 54·7 | 49·0 | 5·7 | 0·9 | 0·3 | 19 | 18 : — : — | 4·0 | Id. ; cirrous haze on horizon. |
| | 3 | 827 | 57·9 | 51·3 | 6·6 | 0·8 | 0·4 | | 18 : — : — | 4·0 | Id. ; linear, crossed, and wo. cirri. |
| | 4 | 814 | 55·7 | 48·3 | 7·4 | 1·3 | 0·8 | 20 | 18 : — : — | 3·0 | Id. ; crossed and mot. cirri ; cir.-str. |
| | 5 | 802 | 52·8 | 46·3 | 6·5 | 1·8 | 1·0 | 19 | — : 19 : 19 | 7·0 | Woolly cirri and cirro-strati. |
| | 6 | 789 | 52·1 | 46·2 | 5·9 | 1·4 | 0·4 | 20 | — : 18 : — | 7·0 | Matted cirro-strati. |
| | 7 | 787 | 49·9 | 44·8 | 5·1 | 0·5 | 0·5 | 20 | 20 : — : 17 | 8·0 | Loose scud ; cirro-strati ; cirri.* |
| | 8 | 796 | 48·2 | 44·1 | 4·1 | 0·5 | 1·0 | 20 | 20 : — : — | 9·0 | Patches of scud ; cirro-strati and cirri.* |
| | 9 | 774 | 48·2 | 44·0 | 4·2 | 0·7 | 0·2 | 20 | — : 17 : — | 9·2 | Dense cirro-strati lying S by W. to N by E. |
| | 10 | 767 | 46·9 | 43·2 | 3·7 | 0·8 | 0·6 | 20 | | 2·0 | Clouds in patches, chiefly to E. |
| | 11 | 768 | 44·8 | 42·0 | 2·8 | 0·4 | 0·0 | | | 1·5 | Cirri, &c. ; uniform auroral light to N. |
| | 12 | 765 | 46·0 | 43·4 | 2·6 | 0·1 | 0·2 | 19 | | 9·0 | Cirrous clouds and patches of scud ; aurora. |
| | 13 | 29·768 | 46·9 | 44·3 | 2·6 | 1·0 | 0·3 | 19 | | 9·5 | Cirrous clouds ; a few drops of rain. |
| | 14 | 766 | 46·5 | 45·0 | 1·5 | 0·2 | 0·1 | 19 | | 9·5 | Id. ; id. ; stars dim. |
| | 15 | 775 | 46·2 | 45·4 | 0·8 | 0·1 | 0·0 | | | 10·0 | Light rain ; dark. |
| | 16 | 795 | 45·4 | 44·0 | 1·4 | 0·1 | 0·0 | | | 9·7 | Rain ceased ; clouds broken. |
| | 17 | 807 | 42·3 | 40·7 | 1·6 | 0·1 | 0·0 | 20 | 26 : — : 22 | 7·0 | Scud ; woolly cirri. |
| | 18 | 828 | 44·0 | 41·5 | 2·5 | 0·0 | 0·0 | 20 | 24 : — : — | 9·7 | Id. ; a few drops of rain. |
| | 19 | 855 | 43·8 | 41·1 | 2·7 | 0·0 | 0·0 | | 26 : — : — | 9·0 | Id. ; cir.-str. and linear cirri diverging from NNE. |
| | 20 | 867 | 44·2 | 40·9 | 3·3 | 0·5 | 0·2 | 23 | | 9·0 | Cirri ; cirro-strati ; scud, cumuli. |
| | 21 | 882 | 45·2 | 41·5 | 3·7 | 0·6 | 0·2 | 24 | — : — : 20 | 8·5 | Woolly cirri ; scud to SE. ; solar halo. |
| | 22 | 896 | 46·1 | 41·4 | 4·7 | 0·9 | 0·5 | 26 | — : — : 18 | 8·0 | Woolly and linear cirri lying SSW. to NNE. ; cumuli ; [scud ; halo. |
| | 23 | 917 | 48·6 | 42·2 | 6·4 | 2·0 | 1·9 | 25 | | 2·0 | Scud and loose cumuli ; woolly cirri ; cirrous haze. |
| 18 | 0 | 930 | 50·0 | 42·6 | 7·4 | 1·3 | 1·1 | 27 | 25 : — : — | 2·0 | Masses of scud and cumuli ; cirri and cirrous haze. |
| | 1 | 934 | 52·0 | 44·7 | 7·3 | 1·3 | 0·9 | 24 | 26 : — : — | 2·0 | Id. ; id. ; |
| | 2 | 949 | 54·0 | 45·0 | 9·0 | 0·8 | 0·9 | 25 | 26 : — : — | 7·0 | Loose cumuli ; woolly and linear cirri. |
| | 3 | 955 | 53·8 | 45·0 | 8·8 | 1·0 | 1·2 | 26 | 26 : — : — | 4·0 | Masses of scud and cum. ; linear cirri and cirrous haze. |
| | 4 | 955 | 53·8 | 45·0 | 8·8 | 1·1 | 0·2 | 24 | 26 : — : 26 | 5·0 | Id. ; id. |
| | 5 | 963 | 53·5 | 44·6 | 8·9 | 0·7 | 0·3 | 26 | | 4·0 | Id. ; woolly and mottled cirri. |
| | 6 | 970 | 52·0 | 44·6 | 7·4 | 0·6 | 0·5 | 23 | 24 : — : 28 | 6·0 | Scud ; woolly and feathered cirri. |
| | 7 | 989 | 48·8 | 42·3 | 6·5 | 1·1 | 0·2 | 22 | 24 : — : — | 8·0 | Id. ; cirri to NW. with rectangular bend. |
| | 8 | 29·999 | 47·0 | 41·3 | 5·7 | 0·3 | 0·1 | 21 | | 10·0 | Cirro-strati. |
| | 9 | 30·008 | 46·9 | 42·0 | 4·9 | 0·3 | 0·1 | 21 | | 9·7 | Id. ; sky to NW. |
| | 10 | 018 | 45·4 | 41·7 | 3·7 | 0·2 | 0·0 | 20 | | 8·5 | Id. ; stars very dim. |
| | 11 | 004 | 44·9 | 41·3 | 3·6 | 0·1 | 0·0 | 19 | | 10·0 | Id. |
| | 12 | 010 | 44·3 | 41·3 | 3·0 | 0·2 | 0·0 | | | 10·0 | Dense cirrous clouds. |
| | 13 | 30·008 | 45·3 | 42·0 | 3·3 | 0·1 | 0·0 | | | 9·9 | Cirrous clouds ; a few stars visible. |
| | 14 | 29·991 | 44·8 | 42·1 | 2·7 | 0·1 | 0·2 | 19 | | 9·9 | Id. ; id. |

The direction of the wind is indicated by the number of the point of the compass, reckoning N. = 0, E. = 8, S. = 16, W. = 24. The motions of the three strata of clouds, Sc. (scud), C.-s. (cirro-stratus), and Cir. (cirrus), are indicated in a similar manner.

* See additional meteorological notes after the *Hourly Meteorological Observations*.

| Gött. Mean Time. | | Barometer at 32°. | Thermometers. Dry. | Wet. | Diff. | Wind. Maximum force in 1h. | 10m. | From | Clouds, Sc. : C.-s. : Ci., moving from | Sky clouded. | Species of Clouds and Meteorological Remarks. |
|---|---|---|---|---|---|---|---|---|---|---|---|
| d. | h. | in. | ° | ° | ° | lbs. | lbs. | pt. | pt. pt. pt. | 0—10. | |
| 18 | 15 | 29·993 | 44·8 | 42·3 | 2·5 | 0·3 | 0·1 | 19 | | 9·9 | Cirrous clouds; a few stars visible. |
| | 16 | 992 | 44·4 | 42·1 | 2·3 | 0·2 | 0·1 | 17 | | 10·0 | Id. |
| | 17 | 983 | 44·7 | 43·1 | 1·6 | 0·4 | 0·2 | 18 | | 10·0 | Light rain. |
| | 18 | 986 | 45·0 | 43·6 | 1·4 | 0·3 | 0·2 | 19 | | 10·0 | Dense cirrous mass; light rain. |
| | 19 | 29·995 | 46·1 | 44·9 | 1·2 | 0·3 | 0·4 | 20 | 22 : 24 : — | 10·0 | Thin scud; thicker scud; dense cirrous clouds; light rain. |
| | 20 | 30·001 | 47·0 | 45·9 | 1·1 | 0·4 | 0·2 | 20 | | 10·0 | As before. |
| | 21 | 009 | 49·5 | 47·6 | 1·9 | 0·3 | 0·1 | 19 | | 10·0 | Scud and cirrous clouds; light rain. |
| | 22 | 016 | 51·0 | 49·1 | 1·9 | 0·3 | 0·4 | 19 | 24 : — : 29 | 10·0 | Scud; woolly cirri. |
| | 23 | 035 | 54·8 | 51·0 | 3·8 | 0·3 | 0·3 | 23 | 26 : — : — | 9·9 | Id. id. |
| 19 | 0 | 031 | 56·7 | 52·1 | 4·6 | 0·3 | 0·2 | 23 | 24 : — : — | 9·0 | Id. |
| | 1 | 025 | 60·0 | 53·5 | 6·5 | 0·9 | 1·5 | 28 | — : 25 : 30 | 6·0 | Cirro-stratous scud; woolly cirri lying in bands S by W. to N by E. |
| | 2 | 021 | 59·7 | 52·9 | 6·8 | 1·5 | 0·8 | 20 | 26 : 28 : 28 | 8·0 | Scud; cirro-cumuli; cirro-strati, woolly cirri. |
| | 3 | 022 | 59·1 | 52·5 | 6·6 | 1·6 | 0·6 | 20 | 24 : — : 28 | 8·0 | Id.; woolly cirri. |
| | 4 | 032 | 58·2 | 52·2 | 6·0 | 1·6 | 0·9 | 20 | 24 : 28 : — | 8·0 | Id.; beautifully chequered semifluid cirro-cumuli. |
| | 5 | 042 | 55·5 | 51·0 | 4·5 | 1·8 | 1·0 | 20 | 24 : — : — | 9·7 | Id.; cirrous clouds. |
| | 6 | 040 | 54·0 | 49·2 | 4·8 | 1·0 | 0·3 | 20 | 24 : — : — | 9·8 | Id.; cirro-cumuli, cirro-strati. |
| | 7 | 026 | 54·8 | 49·6 | 5·2 | 1·3 | 0·6 | 20 | 24 : 26 : — | 9·8 | Id.; id.; id. |
| | 8 | 029 | 53·3 | 49·0 | 4·3 | 0·9 | 0·7 | 21 | 25 : — : — | 9·9 | Id.; id.; id. |
| | 9 | 024 | 52·9 | 49·0 | 3·9 | 1·4 | 0·5 | 21 | | 9·9 | Id.; id.; id. |
| | 10 | 025 | 52·6 | 49·6 | 3·0 | 0·6 | 0·0 | | | 9·9 | Cirro-cumulous scud; strong twilight to N. |
| | 11 | 020 | 50·1 | 48·1 | 2·0 | 0·2 | 0·0 | | | 4·0 | Clear in zenith; clouds near horizon. |
| | 12 | 010 | 52·1 | 49·5 | 2·6 | 0·4 | 0·1 | 20 | | 10·0 | A few drops of rain. |
| | 13 | 30·004 | 51·9 | 49·2 | 2·7 | 0·8 | 0·3 | 19 | | 10·0 | Dark; light rain. |
| | 14 | 29·985 | 50·2 | 48·7 | 1·5 | 0·5 | 0·2 | 20 | | 9·5 | Scud; clouds broken; drops of rain. |
| | 15 | 967 | 50·9 | 48·6 | 2·3 | 0·4 | 0·6 | 20 | | 10·0 | Rain. |
| | 16 | 958 | 49·0 | 48·2 | 0·8 | 0·7 | 0·3 | 20 | | 10·0 | Fair; it rained till 15h 50m. |
| | 17 | 956 | 50·3 | 48·5 | 1·8 | 1·5 | 0·2 | 20 | 24 : — : — | 10·0 | Scud; rain commenced at 16h 20m. |
| | 18 | 959 | 49·5 | 48·8 | 0·7 | 0·6 | 0·1 | 20 | 24 : — : — | 10·0 | Id.; cirrous clouds; rain. |
| | 19 | 948 | 51·7 | 50·0 | 1·7 | 0·7 | 0·7 | 20 | 24 : — : — | 10·0 | Id.; dense cirro-strati and cirrous haze. |
| | 20 | 954 | 53·1 | 51·0 | 2·1 | 0·6 | 0·8 | 20 | 24 : 27 : — | 9·8 | Id.; cirro-strati. |
| | 21 | 958 | 55·2 | 52·1 | 3·1 | 1·1 | 1·3 | 21 | 25 : 24 : — | 6·0 | Thin smoky scud; cirro-cumulo-strati; cirri. |
| | 22 | 972 | 58·3 | 54·0 | 4·3 | 0·9 | 0·3 | 23 | 24 : — : — | 9·9 | Scud; cirrous clouds. |
| | 23 | 968 | 59·0 | 54·2 | 4·8 | 0·3 | 0·5 | 25 | 24 : — : — | 9·7 | Id.; id. |
| 20 | 0 | 957 | 62·0 | 56·0 | 6·0 | 0·5 | 0·2 | 21 | 24 : — : — | 9·8 | Id.; id. |
| | 1 | 953 | 61·7 | 56·0 | 5·7 | 0·8 | 1·0 | 24 | 24 : — : — | 9·8 | Id.; cirro-strati and cirrous clouds. |
| | 2 | 956 | 58·0 | 53·3 | 4·7 | 1·5 | 0·9 | 23 | 24 : — : — | 10·0 | Id.; id. |
| | 3 | 953 | 57·8 | 53·0 | 4·8 | 1·4 | 0·5 | 24 | 24 : — : — | 10·0 | Id.; id. |
| | 4 | 945 | 57·0 | 52·6 | 4·4 | 0·7 | 0·5 | 24 | 24 : — : — | 10·0 | Id.; id. |
| | 5 | 953 | 55·9 | 52·1 | 3·8 | 0·3 | 0·2 | 24 | 24 : — : — | 10·0 | Id.; id. |
| | 6 | 944 | 54·2 | 51·5 | 2·7 | 0·4 | 0·1 | 24 | 24 : — : — | 10·0 | Id. |
| | 7 | 959 | 53·3 | 50·9 | 2·4 | 0·3 | 0·2 | 23 | 24 : — : — | 10·0 | Id. |
| | 8 | 964 | 52·2 | 49·9 | 2·3 | 0·3 | 0·1 | 24 | 25 : — : — | 10·0 | Id.; cir.-str. to E.; clouds red to W.; light rain. |
| | 9 | 979 | 51·0 | 48·9 | 2·1 | 0·1 | 0·0 | | 25 : — : — | 10·0 | Id. |
| | 10 | 989 | 46·4 | 45·4 | 1·0 | 0·2 | 0·0 | 4 | | 10·0 | Dark. |
| | 11 | 29·998 | 46·1 | 45·1 | 1·0 | 0·1 | 0·0 | | | 10·0 | Id. |
| | 12 | 30·005 | 45·0 | 44·8 | 0·2 | 0·0 | 0·0 | | | 10·0 | Id.; light rain. |
| 21 | 1 | 29·959 | ... | ... | ... | 0·3 | ... | | | | |
| | 13 | 29·896 | 42·4 | 42·0 | 0·4 | 0·6 | 0·0 | | | 10·0 | Light rain. |
| | 14 | 880 | 42·3 | 41·7 | 0·6 | 0·0 | 0·0 | | | 10·0 | Dark. |
| | 15 | 865 | 42·1 | 41·6 | 0·5 | 0·0 | 0·0 | | | 10·0 | Id. |
| | 16 | 861 | 42·1 | 41·6 | 0·5 | 0·0 | 0·0 | | | 10·0 | Scud; cirrous clouds. |
| | 17 | 852 | 42·0 | 41·6 | 0·4 | 0·0 | 0·0 | | 24 : — : — | 10·0 | Id.; dense cirro-strati. |
| | 18 | 850 | 42·3 | 41·6 | 0·7 | 0·0 | 0·0 | | 24 : — : — | 10·0 | Id.; id. |
| | 19 | 846 | 43·4 | 42·1 | 1·3 | 0·0 | 0·0 | 20 | — : 24 : — | 10·0 | Cir.-str. scud; strati on Cheviot; patch of sky to S. |
| | 20 | 841 | 45·3 | 43·5 | 1·8 | 0·0 | 0·0 | 18 | — : 24 : — | 8·5 | Id.; id.; patch of scud to S. |

The direction of the wind is indicated by the number of the point of the compass, reckoning N. = 0, E. = 8, S. = 16, W. = 24. The motions of the three strata of clouds, Sc. (scud), C.-s. (cirro-stratus), and Cir. (cirrus), are indicated in a similar manner.

| Gött. Mean Time. | Barometer at 32°. | Thermometers. Dry. | Wet. | Diff. | Wind. Maximum force in 1h. | 10m. | From | Clouds, Sc. : C.-s. : Ci., moving from | Sky clouded. | Species of Clouds and Meteorological Remarks. |
|---|---|---|---|---|---|---|---|---|---|---|
| d. h. | in. | ° | ° | ° | lbs. | lbs. | pt. | pt. pt. pt. | 0—10. | |
| 21 21 | 29·844 | 49·9 | 46·9 | 3·0 | 0·1 | 0·1 | 20 | 22 : 23 : — | 9·7 | Scud; cirro-stratous scud. |
| 22 | 845 | 50·8 | 47·7 | 3·1 | 0·1 | 0·0 | 20 | 24 : 24 : — | 9·7 | Id.; id., moving very slowly. |
| 23 | 839 | 53·5 | 49·4 | 4·1 | 0·1 | 0·0 | 20 | | 9·7 | Id.; id. |
| 22 0 | 832 | 55·0 | 50·7 | 4·3 | 0·4 | 0·1 | 18 | 24 : — : 24 | 9·0 | Id., loose cumuli, woolly cirri. |
| 1 | 838 | 51·1 | 48·1 | 3·0 | 0·2 | 0·2 | 26 | 24 : — : 24 | 10·0 | Id., id., id.; light rain; showers. |
| 2 | 844 | 53·0 | 48·8 | 4·2 | 0·4 | 1·3 | 26 | 24 : 24 : — | 9·7 | Scud and cirrous scud. |
| 3 | 862 | 51·7 | 47·1 | 4·6 | 0·9 | 0·8 | 27 | 26 : — : — | 4·0 | Scud and cumuli. |
| 4 | 849 | 53·4 | 45·9 | 7·5 | 1·2 | 1·0 | 25 | 26 : — : — | 3·0 | Id. |
| 5 | 864 | 53·7 | 45·9 | 7·8 | 1·9 | 1·1 | 25 | 26 : — : — | 2·5 | Id. |
| 6 | 868 | 52·0 | 45·5 | 6·5 | 0·5 | 0·3 | 25 | 26 : — : — | 1·0 | Id. |
| 7 | 883 | 49·3 | 44·6 | 4·7 | 0·6 | 0·1 | 26 | 26 : — : — | 0·7 | Id. |
| 8 | 903 | 47·0 | 43·0 | 4·0 | 0·2 | 0·0 | 21 | 25 : — : — | 0·5 | Loose scud; masses of cir.-str.; cirrous haze on hor. |
| 9 | 911 | 46·0 | 42·2 | 3·8 | 0·1 | 0·1 | 25 | | 0·2 | Patches of scud; cir.-str. and cirrous haze on horizon. |
| 10 | 924 | 44·8 | 41·4 | 3·4 | 0·1 | 0·0 | | | 2·0 | Scud and cirro-strati. |
| 11 | 933 | 45·0 | 2 ·0 | 3·0 | 0·1 | 0·0 | 22 | | 7·0 | Id. |
| 12 | 937 | 44·1 | 41·8 | 2·3 | 0·1 | 0·1 | 20 | | 9·5 | Id. |
| 13 | 29·927 | 43·2 | 41·1 | 2·1 | 0·1 | 0·0 | 19 | | 4·0 | Scud on horizon. |
| 14 | 923 | 43·1 | 41·2 | 1·9 | 0·0 | 0·0 | 20 | | 4·5 | Id. |
| 15 | 910 | 43·3 | 41·4 | 1·9 | 0·6 | 0·3 | 17 | | 8·0 | Scud. |
| 16 | 907 | 43·3 | 41·2 | 2·1 | 0·2 | 0·0 | 19 | | 6·0 | Id. |
| 17 | 898 | 40·3 | 39·3 | 1·0 | 0·0 | 0·0 | 19 | | 8·0 | Id., cirro-strati; stratus on Cheviot; sky red to E. |
| 18 | 889 | 40·7 | 39·7 | 1·0 | 0·0 | 0·0 | 21 | | 9·0 | Scud to S. and W.; cir.-str. to E. [haze. |
| 19 | 880 | 44·4 | 42·7 | 1·7 | 0·7 | 0·2 | 20 | 23 : — : — | 9·0 | Patches of scud; id.; linear cirri and cir. |
| 20 | 861 | 46·7 | 43·7 | 3·0 | 1·0 | 0·8 | 20 | 24 : — : — | 9·0 | Masses of loose scud; cirrous haze and linear cirri. |
| 21 | 854 | 48·8 | 45·0 | 3·8 | 1·7 | 0·8 | 20 | 23 : 24 : 24 | 8·0 | Patches of scud; woolly cirri; cir.-str.; solar halo. |
| 22 | 838 | 49·2 | 44·9 | 4·3 | 1·4 | 2·3 | 20 | — : 24 : — | 9·0 | Cir.-cum. scud; patches of loose scud; cirri; cir.-str. |
| 23 | 812 | 52·0 | 47·1 | 4·9 | 2·6 | 2·2 | 20 | 23 : — : — | 9·0 | Scud; cirrous clouds. |
| 23 0 | 788 | 52·2 | 46·3 | 5·9 | 3·0 | 2·9 | 20 | 22 : — : — | 8·0 | Id.; cirrous haze and cirri; solar halo. |
| 1 | 773 | 53·1 | 47·9 | 5·2 | 2·9 | 1·4 | 20 | 23 : — : — | 8·0 | Scud and loose cumuli. |
| 2 | 746 | 55·2 | 48·3 | 6·9 | 4·0 | 1·5 | 20 | 22 : — : — | 9·5 | Id.; patches of cirri. |
| 3 | 718 | 54·9 | 48·4 | 6·5 | 3·2 | 2·0 | 20 | 22 : — : — | 9·0 | Id.; id. |
| 4 | 684 | 54·6 | 48·8 | 5·8 | 3·2 | 1·8 | 19 | 23 : — : — | 6·0 | Id. |
| 5 | 651 | 53·3 | 48·1 | 5·2 | 4·8 | 2·6 | 20 | 23 : — : — | 3·0 | Id. |
| 6 | 634 | 51·6 | 47·5 | 4·1 | 3·0 | 2·5 | 20 | 23 : — : — | 8·0 | Id.; cirri and cirro-strati to S. |
| 7 | 629 | 51·3 | 47·1 | 4·2 | 2·6 | 0·7 | 20 | 23 : — : — | 9·0 | Scud; patches of cirri and cirro-strati. |
| 8 | 612 | 50·7 | 45·4 | 5·3 | 1·5 | 0·4 | 20 | 22 : — : — | 9·5 | Id.; cirro-strati. |
| 9 | 593 | 49·4 | 45·3 | 4·1 | 1·2 | 0·2 | 20 | 22 : — : — | 8·0 | Id.; id. |
| 10 | 590 | 49·6 | 44·5 | 5·1 | 1·2 | 0·2 | 20 | | 9·5 | Id.; id. |
| 11 | 561 | 49·1 | 43·8 | 5·3 | 0·2 | 0·9 | 20 | 24 : — : — | 9·7 | Id.; id. |
| 12 | 531 | 48·3 | 44·8 | 3·5 | 2·6 | 1·8 | 20 | | 9·0 | Scud and cirrous clouds. |
| 13 | 29·510 | 48·0 | 45·0 | 3·0 | 2·4 | 1·3 | 20 | | 9·5 | Scud and cirrous clouds. |
| 14 | 518 | 47·8 | 46·9 | 0·9 | 2·4 | 0·8 | 24 | | 10·0 | Dark; light rain; passing shower. |
| 15 | 542 | 45·9 | 40·0 | 5·9 | 3·5 | 3·4 | 26 | | 0·5 | Cirrous clouds to N. |
| 16 | 564 | 44·3 | 38·2 | 6·1 | 3·8 | 2·4 | 24 | | 1·5 | Id. N. and E. |
| 17 | 566 | 43·1 | 38·0 | 5·1 | 3·8 | 3·3 | 23 | 24 : — : 24 | 1·0 | Scud; woolly cirri. |
| 18 | 594 | 42·9 | 38·8 | 4·1 | 3·8 | 3·2 | 20 | 24 : — : — | 1·5 | Scud and loose cumuli; linear cirri. |
| 19 | 609 | 44·7 | 38·8 | 5·9 | 3·0 | 1·6 | 22 | 26 : — : 25 | 0·5 | Patches of loose scud; woolly and mottled cirri. |
| 20 | 631 | 45·6 | 39·7 | 5·9 | 4·5 | 1·7 | 26 | 25 : — : — | 6·0 | Loose misty scud; thin cirri. |
| 21 | 653 | 47·2 | 40·4 | 6·8 | 3·5 | 4·5 | 25 | 26 : — : 26 | 0·5 | Patches of loose scud; thin cirri. |
| 22 | 682 | 48·3 | 40·6 | 7·7 | 4·3 | 3·2 | 26 | 26 : — : — | 0·5 | Masses of loose scud. |
| 23 | 721 | 49·9 | 41·8 | 8·1 | 4·1 | 1·7 | 25 | 26 : — : — | 0·7 | Id. |
| 24 0 | 759 | 49·8 | 42·3 | 7·5 | 2·6 | 1·2 | 28 | 26 : — : — | 1·5 | Masses of scud and loose cumuli. |
| 1 | 775 | 53·7 | 45·2 | 8·5 | 2·0 | 1·4 | 24 | 26 : — : — | 5·0 | Scud and cumuli. |
| 2 | 801 | 52·1 | 44·6 | 7·5 | 1·8 | 0·3 | 25 | 26 : — : — | 8·0 | Id. |
| 3 | 818 | 52·9 | 44·0 | 8·9 | 2·2 | 0·5 | 24 | 26 : — : — | 3·0 | Id. |
| 4 | 824 | 52·6 | 43·5 | 9·1 | 1·7 | 0·8 | 25 | 26 : — : — | 2·0 | Id. |

The direction of the wind is indicated by the number of the point of the compass, reckoning N. = 0, E. = 8, S. = 16, W. = 24. The motions of the three strata of clouds, Sc. (scud), C.-s. (cirro-stratus), and Cir. (cirrus), are indicated in a similar manner.

| Gött. Mean Time. | | Barometer at 32°. | Thermometers. Dry. | Wet. | Diff. | Wind. Maximum force in 1h. | 10m. | From | Clouds, Sc. : C.-s. : Ci., moving from | Sky clouded. | Species of Clouds and Meteorological Remarks. |
|---|---|---|---|---|---|---|---|---|---|---|---|
| d. | h. | in. | ° | | ° | lbs. | lbs. | pt. | pt. pt. pt. | 0—10. | |
| 24 | 5 | 29·841 | 51·8 | 43·8 | 8·0 | 1·4 | 0·5 | 25 | 26 : — : — | 1·0 | Scud and cumuli. |
| | 6 | 857 | 50·0 | 42·9 | 7·1 | 1·1 | 1·3 | 21 | 26 : — : — | 2·0 | Id.; patches of cirri and cirro-cumuli. |
| | 7 | 863 | 47·9 | 41·0 | 6·9 | 0·8 | 0·4 | 23 | 24 : 27 : — | 2·0 | Id.; cirro-strati and cymoid cirri. |
| | 8 | 885 | 44·7 | 39·0 | 5·7 | 0·4 | 0·0 | 20 | — : 29 : — | 1·0 | Loose cirri and cirro-strati; very hazy to E. |
| | 9 | 905 | 43·9 | 38·9 | 5·0 | 0·0 | 0·0 | | — : 27 : — | 6·0 | Loose cirro-cumuli; lunar corona. |
| | 10 | 907 | 43·7 | 39·0 | 4·7 | 0·1 | 0·0 | 21 | | 9·0 | Id. |
| | 11 | 918 | 42·0 | 38·0 | 4·0 | 0·2 | 0·1 | 20 | | 8·0 | Id. |
| | 12 | 919 | 42·0 | 38·0 | 4·0 | 0·1 | 0·0 | 20 | | 4·0 | Loose cirrous clouds. |
| | 13 | 29·917 | 40·2 | 37·3 | 2·9 | 0·1 | 0·0 | 20 | | 9·0 | Loose cirrous clouds. |
| | 14 | 915 | 39·7 | 37·1 | 2·6 | 0·0 | 0·0 | 20 | | 9·7 | Id. |
| | 15 | 902 | 38·4 | 36·6 | 1·8 | 0·0 | 0·0 | 20 | | 7·5 | Id. |
| | 16 | 886 | 40·9 | 39·0 | 1·9 | 0·0 | 0·0 | 19 | | 8·5 | Id. |
| | 17 | 878 | 43·3 | 40·9 | 2·4 | 0·2 | 0·1 | 22 | — : 24 : — | 9·8 | Cirro-strati and cirrous clouds. |
| | 18 | 886 | 45·2 | 42·7 | 2·5 | 0·3 | 0·1 | 24 | 20 : 24 : — | 10·0 | Loose scud; thick cirro-strati. |
| | 19 | 890 | 46·1 | 44·0 | 2·1 | 0·1 | 0·0 | | | 10·0 | Id.; id. [and cir.-cum. |
| | 20 | 886 | 48·7 | 46·0 | 2·7 | 0·0 | 0·0 | | — : 23 : 23 | 9·7 | The thick cirrous mass has broken up into woolly cirri |
| | 21 | 890 | 49·9 | 46·4 | 3·5 | 0·4 | 0·1 | 21 | 20 : — : — | 10·0 | Patches of loose scud; dense cirro-strati. |
| | 22 | 892 | 53·3 | 48·9 | 4·4 | 1·0 | 1·0 | 20 | | 10·0 | Id.; id. |
| | 23 | 882 | 53·6 | 48·2 | 5·4 | 0·8 | 0·4 | 20 | 22 : — : — | 9·9 | Thin scud; cirro-strati; woolly cirri. |
| 25 | 0 | 882 | 55·0 | 49·3 | 5·7 | 1·0 | 1·0 | 21 | 20 : 22 : — | 10·0 | Patches of loose scud; thicker scud; dense cirro-strati. |
| | 1 | 874 | 57·0 | 51·4 | 5·6 | 1·0 | 0·8 | 20 | | 9·5 | Scud and dense cirro-strati. |
| | 2 | 865 | 59·7 | 52·7 | 7·0 | 1·2 | 0·5 | 21 | 20 : — : — | 9·5 | Loose scud; linear cirri and cirro-cumuli. |
| | 3 | 846 | 59·6 | 51·8 | 7·8 | 2·4 | 1·6 | 19 | 20 : — : 23 | 8·0 | Id.; fine linear and woolly-cirri; cirro-strati. |
| | 4 | 838 | 58·8 | 52·0 | 6·8 | 2·1 | 0·4 | 19 | | 9·5 | Scud and cirro-strati; cirrous haze; solar halo? |
| | 5 | 829 | 56·2 | 49·9 | 6·3 | 0·8 | 0·4 | 20 | | 9·5 | Id. |
| | 6 | 820 | 55·0 | 50·0 | 5·0 | 0·4 | 0·4 | 19 | 20 : — : — | 9·5 | Scud; diffuse cirri and cirro-strati; solar halo. |
| | 7 | 818 | 52·2 | 48·2 | 4·0 | 0·5 | 0·1 | 20 | | 9·7 | |
| | 8 | 811 | 50·0 | 46·9 | 3·1 | 0·2 | 0·0 | | 24 : — : — | 9·9 | Cirro-stratous scud; linear and woolly cirri; cir.-str. |
| | 9 | 804 | 48·5 | 46·0 | 2·5 | 0·0 | 0·0 | | | 10·0 | Cirrous clouds and haze. |
| | 10 | 807 | 47·9 | 45·6 | 2·3 | 0·0 | 0·0 | | | 10·0 | Thick cirrous clouds and cirro-strati. |
| | 11 | 801 | 45·0 | 43·6 | 1·4 | 0·0 | 0·0 | | | 9·9 | Woolly and linear cirri, cirro-strati, cirrous haze. |
| | 12 | 794 | 45·2 | 43·9 | 1·3 | 0·0 | 0·0 | | | 8·0 | Cirro-cumuli, cirro-strati, cirrous haze. |
| | 13 | 29·780 | 45·0 | 43·2 | 1·8 | 0·0 | 0·0 | | | 8·0 | Cirro-cumuli, cirro-strati, cirrous haze. |
| | 14 | 764 | 45·0 | 42·9 | 2·1 | 0·0 | 0·0 | | | 8·0 | Woolly cirri; stars shining faintly through the cirri. |
| | 15 | 747 | 43·7 | 41·7 | 2·0 | 0·0 | 0·0 | | | 7·0 | Id., cirro-cumuli. |
| | 16 | 737 | 43·1 | 40·9 | 2·2 | 0·0 | 0·0 | | — : 20 : — | 6·0 | Woolly cirro-cumuli; cirro-strati, cirrous haze. |
| | 17 | 723 | 41·3 | 39·6 | 1·7 | 0·0 | 0·0 | | | 5·0 | Cirri, cirro-strati, and cirrous haze. |
| | 18 | 719 | 43·8 | 41·1 | 2·7 | 0·2 | 0·0 | 20 | | 5·0 | Id., id., id. |
| | 19 | 726 | 45·2 | 42·6 | 2·6 | 0·1 | 0·0 | | — : 22 : — | 9·5 | Cirro-cumulous scud; cirro-strati and cirrous clouds. |
| | 20 | 726 | 48·6 | 46·0 | 2·6 | 0·1 | 0·3 | 19 | 21 : — : — | 10·0 | Loose scud; cirro-cumulous scud and cirrous clouds. |
| | 21 | 724 | 50·3 | 48·0 | 2·3 | 0·7 | 0·5 | 19 | 20 : — : — | 9·7 | Id.; id. |
| | 22 | 722 | 54·9 | 50·8 | 4·1 | 1·3 | 0·9 | 20 | 21 : 22 : 22 | 9·0 | Id.; id.; cirri and cirro-strati. |
| | 23 | 719 | 57·8 | 51·3 | 6·5 | 1·2 | 1·2 | 20 | 24 : 22 : — | 6·0 | Scud; woolly cirri and cirro-cumuli. |
| 26 | 0 | 724 | 57·0 | 50·2 | 6·8 | 1·3 | 0·4 | 21 | 23 : — : — | 10·0 | Thick scud; cirro-strati to E. |
| | 1 | 731 | 55·1 | 49·2 | 5·9 | 0·7 | 1·7 | 21 | 22 : — : — | 10·0 | Id. |
| | 2 | 767 | 50·8 | 46·7 | 4·1 | 1·5 | 0·9 | 25 | 24 : 22 : — | 10·0 | Loose smoky scud; thick scud. |
| | 3 | 780 | 51·9 | 46·5 | 5·4 | 1·9 | 0·8 | 26 | 24 : 22 : — | 6·5 | Loose scud; cirro-cumuli, cir.-str. lying SW. to NE. |
| | 4 | 787 | 53·6 | 44·6 | 9·0 | 1·4 | 1·6 | 25 | — : 21 : — | 3·0 | Woolly cirri and cirro-cumuli; scud and cumuli. |
| | 5 | 807 | 53·1 | 44·0 | 9·1 | 2·0 | 0·6 | | 25 : 21 : — | 2·0 | Scud and cumuli; cirri and cirro-cumuli; cirro-strati. |
| | 6 | 813 | 50·2 | 42·2 | 8·0 | 1·4 | 1·4 | 26 | | 2·5 | Id.; linear cirri and cirro-strati. |
| | 7 | 838 | 47·6 | 40·0 | 7·6 | 2·3 | 1·5 | 26 | | 0·7 | Id.; id. |
| | 8 | 856 | 45·1 | 37·2 | 7·9 | 1·6 | 0·4 | 26 | | 1·0 | Scud, cirro-strati, cirrous haze. |
| | 9 | 879 | 44·4 | 39·0 | 5·4 | 0·8 | 0·4 | 22 | | 0·1 | Patches of scud; haze to E. |
| | 10 | 895 | 43·3 | 38·0 | 5·3 | 0·4 | 0·4 | 21 | | 0·1 | Id.; id. |
| | 11 | 913 | 42·2 | 37·9 | 4·3 | 1·1 | 0·2 | 22 | 24 : — : — | 0·5 | Scud to W.; sky clear. |
| | 12 | 917 | 40·3 | 37·2 | 3·1 | 0·3 | 0·0 | | 24 : — : — | 2·0 | Scud to S. |

The direction of the wind is indicated by the number of the point of the compass, reckoning N. = 0, E. = 8, S. = 16, W. = 24. The motions of the three strata of clouds, Sc. (scud), C.-s. (cirro-stratus), and Cir. (cirrus), are indicated in a similar manner.

| Gött. Mean Time. | Barometer at 32°. | Thermometers. Dry. | Wet. | Diff. | Wind. Maximum force in 1h. | 10m. | From | Clouds, Sc. : C.-s. : Ci., moving from | Sky clouded. | Species of Clouds and Meteorological Remarks. |
|---|---|---|---|---|---|---|---|---|---|---|
| d. h. | in. | ° | ° | ° | lbs. | lbs. | pt. | pt. pt. pt. | 0—10. | |
| 26 13 | 29·933 | 38·8 | 36·4 | 2·4 | 0·1 | 0·0 | 19 | 24 : — : — | 0·5 | Scud to S. |
| 14 | 935 | 37·2 | 35·3 | 1·9 | 0·2 | 0·0 | 19 | | 0·5 | Thin cirri radiating from SW by W.; lunar halo. |
| 15 | 938 | 36·8 | 35·1 | 1·7 | 0·1 | 0·1 | 18 | | 3·0 | Cumuli, cirro-strati. |
| 16 | 938 | 39·0 | 36·6 | 2·4 | 0·0 | 0·0 | | | 5·0 | Id. id.. |
| 17 | 942 | 40·3 | 37·3 | 3·0 | 0·5 | 0·1 | 21 | — : — : 24 | 6·5 | Varieties of beautiful cirri. |
| 18 | 945 | 41·5 | 37·7 | 3·8 | 0·4 | 0·4 | 23 | 24 : — : — | 0·7 | Patches of scud; cirri, cirro-strati. |
| 19 | 958 | 43·5 | 39·4 | 4·1 | 0·9 | 0·5 | 24 | | 0·1 | Linear cirri to W. |
| 20 | 964 | 45·8 | 40·8 | 5·0 | 1·1 | 0·9 | 24 | | 0·1 | Linear cirri to S.; cirrous haze to E. |
| 21 | 980 | 47·8 | 41·5 | 6·3 | 2·2 | 1·2 | | 26 : 28 : — | 2·0 | Masses of loose scud; thin cir.-str. lying NNW. to SSE. |
| 22 | 982 | 50·0 | 43·2 | 6·8 | 2·1 | 1·9 | 26 | 25 : 30 : — | 6·0 | Id.; woolly cirri. |
| 23 | 991 | 51·3 | 43·9 | 7·4 | 2·1 | 2·1 | 27 | 28 : — : 30 | 7·0 | Scud; thin woolly cirri. |
| 27 0 | 29·985 | 52·7 | 44·1 | 8·6 | 2·4 | 1·0 | 27 | 28 : — : 30 | 8·0 | Thin scud; woolly and linear cirri; cumuli, cir.-str. |
| 1 | 30·002 | 52·3 | 43·4 | 8·9 | 1·5 | 1·0 | 26 | 28 : — : — | 9·9 | Masses of scud; cumuli; cirro-strati. |
| 2 | 30·000 | 52·8 | 45·0 | 7·8 | 1·0 | 0·8 | 26 | | 9·7 | Scud, cumuli, cirro-strati, cirrous haze. |
| 3 | 30·000 | 54·1 | 45·5 | 8·6 | 1·5 | 1·6 | 27 | — : 28 : — | 9·7 | Cirro-strati; patches of scud. |
| 4 | 29·999 | 53·5 | 45·0 | 8·5 | 1·0 | 1·4 | 26 | | 9·0 | Id. |
| 5 | 29·995 | 53·3 | 44·8 | 8·5 | 1·7 | 1·0 | 28 | — : 26 : — | 8·5 | Cirro-strati and cirri; patches of scud. |
| 6 | 30·016 | 52·0 | 44·1 | 7·9 | 1·5 | 1·0 | 28 | 26 : 26 : — | 2·5 | Loose cumuli; mottled and furrowed cir.-str.; cirri. |
| 7 | 027 | 50·7 | 43·8 | 6·9 | 1·0 | 0·2 | 28 | 26 : 26 : 27 | 3·5 | Id.; id.; id. |
| 8 | 047 | 47·1 | 42·2 | 4·9 | 0·4 | 0·1 | 28 | | 3·0 | Nearly as before; cirro-strati looser. |
| 9 | 074 | 47·8 | 42·1 | 5·7 | 0·1 | 0·1 | 27 | | 6·0 | As before; cirro-strati becoming cirro-cumuli. |
| 10 | 089 | 45·5 | 41·2 | 4·3 | 0·2 | 0·0 | 27 | | 5·0 | Id.; id. |
| 11 | 096 | 39·7 | 37·9 | 1·8 | 0·0 | 0·0 | | | 3·0 | Id. |
| 12 | 104 | 38·1 | 36·6 | 1·5 | 0·0 | 0·0 | | | 0·5 | Cirro-strati. |
| 23½ | 30·154 | ... | ... | ... | 0·0 | 0·0 | | | ..... | Faint solar halo. |
| 28 13 | 30·113 | 38·6 | 37·6 | 1·0 | 0·5 | 0·0 | | | 0·0 | Clear. |
| 14 | 101 | 36·0 | 35·5 | 0·5 | 0·0 | 0·0 | | | 0·0 | Id. |
| 15 | 101 | 35·6 | 35·0 | 0·6 | 0·0 | 0·0 | | | 0·2 | Haze on E. horizon. |
| 16 | 100 | 34·2 | 33·9 | 0·3 | 0·0 | 0·0 | | | 0·2 | Cirro-strati and haze on E. horizon; hoar-frost. |
| 17 | 092 | 33·5 | 33·3 | 0·2 | 0·0 | 0·0 | | | 0·2 | Id. |
| 18 | 100 | 34·7 | 34·0 | 0·7 | 0·0 | 0·0 | | | 0·2 | Id. |
| 19 | 104 | 37·1 | 36·0 | 1·1 | 0·0 | 0·0 | | | 0·0 | Slight haze to E. |
| 20 | 110 | 41·5 | 39·9 | 1·6 | 0·0 | 0·0 | | | 0·0 | Id. |
| 21 | 109 | 47·8 | 44·1 | 3·7 | 0·0 | 0·0 | | | 0·5 | Streaks of cirri with haze to SE. |
| 22 | 098 | 52·0 | 47·0 | 5·0 | 0·0 | 0·0 | | | 0·2 | Streaks of cir.-str. to S. and SE.; cirrous haze to E. |
| 23 | 093 | 56·9 | 50·1 | 6·8 | 0·0 | 0·0 | | | 0·5 | Cirri to S. |
| 29 0 | 082 | 60·9 | 51·6 | 9·3 | 0·0 | 0·0 | | — : — : 16 | 0·5 | Light cirri over the sky. |
| 1 | 071 | 62·3 | 51·6 | 10·7 | 0·1 | 0·0 | 12 | | 0·2 | Thin cirri; small patches of scud to S. |
| 2 | 060 | 62·7 | 51·5 | 11·2 | 0·0 | 0·0 | | — : — : 14 | 0·5 | Id., spread over the sky. |
| 3 | 051 | 65·9 | 54·8 | 11·1 | 0·0 | 0·0 | | | 1·0 | Id., id. |
| 4 | 042 | 66·8 | 55·2 | 11·6 | 0·1 | 0·0 | 12 | — : — : 14 | 3·0 | Woolly cirri; patches of scud to N. |
| 5 | 041 | 64·7 | 53·9 | 10·8 | 0·3 | 0·4 | 12 | | 2·0 | Thin cirri and cirrous haze. |
| 6 | 038 | 60·3 | 51·0 | 9·3 | 0·6 | 0·2 | 13 | | 2·0 | Id. |
| 7 | 043 | 57·6 | 49·5 | 8·1 | 0·2 | 0·1 | | | 5·0 | Id. [cirro-strati. |
| 8 | 049 | 53·5 | 47·3 | 6·2 | 0·1 | 0·0 | | — : 16 : — | 6·0 | A long streak of cirrus lying NNW. to SSE.; diffuse |
| 9 | 056 | 48·9 | 43·3 | 5·6 | 0·0 | 0·0 | | | 3·0 | Linear cirri; lunar corona. |
| 10 | 063 | 45·0 | 42·4 | 2·6 | 0·0 | 0·0 | | | 0·5 | Thin cirri and haze; faint lunar corona. |
| 11 | 078 | 45·0 | 41·8 | 3·2 | 0·1 | 0·0 | 15 | | 0·0 | Id.; id. |
| 12 | 084 | 42·1 | 39·7 | 2·4 | 0·0 | 0·0 | | | 0·1 | Faint streak of cirrus; id. |
| 13 | 30·089 | 37·6 | 36·5 | 1·1 | 0·0 | 0·0 | | | 0·0 | Clear. |
| 14 | 091 | 36·4 | 36·0 | 0·4 | 0·0 | 0·0 | | | 0·0 | Id. |
| 15 | 094 | 32·3 | 32·0 | 0·3 | 0·0 | 0·0 | | | 0·2 | Streak of cirrus to E. |
| 16 | 107 | 30·0 | 29·7 | 0·3 | 0·0 | 0·0 | | | 0·2 | Id.; stratus and hoar-frost. |
| 17 | 122 | 28·4 | ... | ... | 0·0 | 0·0 | | | 0·2 | Id.; id. |
| 18 | 129 | 29·7 | 29·7 | ... | 0·0 | 0·0 | 18 | | 0·5 | Stratus to E., large bank of it above the Tweed. |

The direction of the wind is indicated by the number of the point of the compass, reckoning N. = 0, E. = 8, S. = 16, W. = 24. The motions of the three strata of clouds, Sc. (scud), C.-s. (cirro-stratus), and Cir. (cirrus), are indicated in a similar manner.

| Gött. Mean Time. | Barometer at 32°. | Thermometers. Dry. | Wet. | Diff. | Wind. Maximum force in 1h. | 10m. | From | Clouds, Sc. : C.-s. : Ci., moving from | Sky clouded. | Species of Clouds and Meteorological Remarks. |
|---|---|---|---|---|---|---|---|---|---|---|
| d. h. | in. | ° | ° | ° | lbs. | lbs. | pt. | pt. pt. pt. | 0—10. | |
| 29 19 | 30·135 | 33·5 | 32·1 | 1·4 | 0·0 | 0·0 | | | 0·2 | Linear cirri to W.; haze to E.; stratus in the valleys. |
| 20 | 144 | 37·0 | 36·1 | 0·9 | 0·0 | 0·0 | | | 0·2 | Id. |
| 21 | 149 | 43·1 | 39·6 | 3·5 | 0·0 | 0·0 | | | 0·2 | Thin cirri to SE. |
| 22 | 148 | 49·1 | 42·3 | 6·8 | 0·0 | 0·0 | | | 0·5 | Thin linear cirri to S. and W.; haze on E. horizon. |
| 23 | 148 | 55·9 | 44·8 | 11·1 | 0·0 | 0·0 | 12 | — : — : 16 | 0·5 | Thin cirri; cirrous haze and cirro-strati on N. hor. |
| 30 0 | 141 | 58·9 | 47·2 | 11·7 | 0·1 | 0·1 | 12 | | 0·5 | Cirri and cirrous haze on horizon. |
| 1 | 140 | 61·5 | 49·5 | 12·0 | 0·3 | 0·2 | 13 | | 0·2 | Haze and streaks of cirri on horizon. |
| 2 | 142 | 63·1 | 48·3 | 14·8 | 0·2 | 0·2 | 15 | — : — : 24 | 1·0 | Thin cirri; streaks of cirri and haze on horizon. |
| 3 | 139 | 63·5 | 50·2 | 13·3 | 0·2 | 0·1 | | | 1·0 | Id. |
| 4 | 128 | 64·0 | 51·6 | 12·4 | 0·1 | 0·0 | | | 0·2 | Cirrous haze on horizon. |
| 5 | 126 | 63·3 | 52·0 | 11·3 | 0·1 | 0·0 | 14 | | 0·2 | Id. |
| 6 | 138 | 59·6 | 49·9 | 9·7 | 0·2 | 0·1 | 14 | | 0·7 | Diffuse cirri and haze. |
| 7 | 145 | 56·8 | 46·1 | 10·7 | 0·1 | 0·0 | | | 2·5 | Diffuse cirri radiating from about W. |
| 8 | 163 | 51·0 | 44·1 | 6·9 | 0·0 | 0·0 | | | 2·5 | Id. |
| 9 | 179 | 46·2 | 40·4 | 5·8 | 0·0 | 0·0 | | | 2·5 | Id. |
| 10 | 179 | 41·5 | 38·0 | 3·5 | 0·0 | 0·0 | | | 3·0 | Diffuse cirri; lunar corona 3°—4° radius. |
| 11 | 192 | 40·1 | 36·4 | 3·7 | 0·0 | 0·0 | | | 1·0 | Light cirri. |
| 12 | 195 | 36·9 | 34·0 | 2·9 | 0·0 | 0·0 | | | 0·2 | Id., streaks of cirro-strati; very clear. |
| 13 | 30·197 | 35·7 | 33·3 | 2·4 | 0·0 | 0·0 | | | 0·2 | Light cirri, streaks of cirro-strati. |
| 14 | 194 | 36·6 | 34·3 | 2·3 | 0·0 | 0·0 | | | 0·2 | Id., id. |
| 15 | 195 | 38·0 | 36·0 | 2·0 | 0·0 | 0·0 | | | 0·2 | Id., id. |
| 16 | 203 | 35·6 | 34·0 | 1·6 | 0·0 | 0·0 | | | 0·5 | Cirri and cirrous haze on horizon. |
| 17 | 210 | 33·6 | 32·6 | 1·0 | 0·0 | 0·0 | | | 0·2 | Id. |
| 18 | 217 | 36·9 | 35·4 | 1·5 | 0·0 | 0·0 | | | 0·2 | Id. |
| 19 | 236 | 37·9 | 35·8 | 2·1 | 0·0 | 0·0 | 18 | | 0·5 | Id. |
| 20 | 240 | 43·4 | 39·3 | 4·1 | 0·0 | 0·0 | 24 | | 0·5 | Linear and diffuse cirri. |
| 21 | 229 | 50·2 | 45·0 | 5·2 | 0·0 | 0·0 | | | 0·5 | Id. |
| 22 | 227 | 54·2 | 48·2 | 6·0 | 0·0 | 0·0 | | | 0·5 | Id. |
| 23 | 224 | 58·1 | 51·5 | 6·6 | 0·0 | 0·0 | | — : — : 20 | 0·5 | Thin cirri moving slowly; cirrous haze on E. horizon. |
| 1 0 | 213 | 64·7 | 53·4 | 11·3 | 0·0 | 0·0 | 14 | | 0·2 | Linear cirri. |
| 1 | 210 | 66·0 | 54·3 | 11·7 | 0·2 | 0·0 | 12 | | 0·2 | Id. |
| 2 | 200 | 67·9 | 55·7 | 12·2 | 0·2 | 0·2 | 13 | | 0·0 | Very hazy; ground invisible a few miles off. |
| 3 | 189 | 69·5 | 56·4 | 13·1 | 0·4 | 0·2 | 14 | | 0·0 | Id.; id. |
| 4 | 175 | 71·4 | 58·2 | 13·2 | 0·2 | 0·3 | 14 | | 0·0 | Haze nearly cleared off; Cheviot visible. |
| 5 | 175 | 70·4 | 57·8 | 12·6 | 0·2 | 0·1 | 13 | — : — : 22 | 1·5 | Linear and woolly cirri. |
| 6 | 176 | 68·1 | 55·4 | 12·7 | 0·2 | 0·2 | 14 | — : — : 22 | 3·0 | Id.; cirrous haze on horizon. |
| 7 | 183 | 64·7 | 53·8 | 10·9 | 0·3 | 0·1 | 14 | — : — : 20 | 3·0 | Cirri; thick cirrous haze on horizon. |
| 8 | 193 | 59·0 | 52·7 | 6·3 | 0·3 | 0·1 | 15 | — : — : 18 | 4·0 | Id.; id. |
| 9 | 199 | 55·7 | 50·1 | 5·6 | 0·2 | 0·0 | 16 | | 4·0 | Id.; id. |
| 10 | 224 | 51·9 | 48·3 | 3·6 | 0·2 | 0·0 | 16 | | 3·0 | Id.; id. |
| 11 | 235 | 48·2 | 46·1 | 2·1 | 0·1 | 0·1 | | | 3·0 | Woolly cirri and cirrous haze. |
| 12 | 245 | 43·9 | 43·3 | 0·6 | 0·0 | 0·0 | | | 0·2 | Sky rather hazy; stars dim. |
| 13 | 30·249 | 43·8 | 43·2 | 0·6 | 0·0 | 0·0 | | | 0·2 | Rather clearer in zenith. |
| 14 | 257 | 43·0 | 42·1 | 0·9 | 0·0 | 0·0 | | | 0·2 | Id. |
| 15 | 259 | 40·8 | 40·1 | 0·7 | 0·0 | 0·0 | | | 0·2 | Streaks of cirri to SW.; hazy round horizon. |
| 16 | 255 | 39·5 | 39·2 | 0·3 | 0·0 | 0·0 | | — : — : 31 | 4·0 | Woolly cirri moving slowly; cirrous haze. |
| 17 | 257 | 41·0 | 40·2 | 0·8 | 0·0 | 0·0 | | — : — : 31 | 6·0 | Woolly cirri and cirrous haze; red to E.; hor. hazy. |
| 18 | 269 | 43·1 | 42·2 | 0·9 | 0·0 | 0·0 | | | 8·0 | Cirri thicker, haze. |
| 19 | 277 | 47·6 | 45·0 | 2·6 | 0·0 | 0·0 | | | 7·0 | Thin cirri and haze; the sun projects a faint shadow. |
| 20 | 281 | 51·3 | 47·7 | 3·6 | 0·0 | 0·0 | | | 7·0 | Cirrous haze over the sky. |
| 21 | 281 | 57·9 | 52·9 | 5·0 | 0·0 | 0·0 | | — : — : 24 | 10·0 | A uniform covering of woolly cirri; solar halo. |
| 22 | 280 | 62·3 | 55·6 | 6·7 | 0·0 | 0·0 | | | 10·0 | Id. id. |
| 23 | 271 | 64·0 | 55·8 | 8·2 | 0·0 | 0·0 | | | 10·0 | As before; no halo. |
| 2 0 | 258 | 65·7 | 58·0 | 7·7 | 0·0 | 0·0 | | | 10·0 | Cirrous clouds and haze becoming rather thicker. |
| 1 | 243 | 68·4 | 57·4 | 11·0 | 0·0 | 0·0 | | | 10·0 | Id. |
| 2 | 246 | 65·1 | 55·7 | 9·4 | 0·0 | 0·0 | | | 7·0 | Cirrous clouds and cirro-cumuli; atmospheric haze. |

The direction of the wind is indicated by the number of the point of the compass, reckoning N. = 0, E. = 8, S. = 16, W. = 24. The motions of the three strata of clouds, Sc. (scud), C.-s. (cirro-stratus), and Cir. (cirrus), are indicated in a similar manner.

May 1d 5h. On removing the dry and wet thermometers to the E. end of the Observatory, the readings were—Dry thermometer, 69°·5; Wet thermometer, 55°·1.

| Gött. Mean Time. | Barometer at 32°. | Thermometers. Dry. | Wet. | Diff. | Wind. Maximum force in 1h. | 10m. | From | Clouds, Sc. : C.-s. : Ci., moving from | Sky clouded. | Species of Clouds and Meteorological Remarks. |
|---|---|---|---|---|---|---|---|---|---|---|
| d. h. | in. | ° | ° | ° | lbs. | lbs. | pt. | pt. pt. pt. | 0—10. | |
| 2 3 | 30·228 | 67·7 | 58·0 | 9·7 | 0·0 | 0·0 | 8 | | 5·0 | Cirrous clouds; thick haze below. |
| 4 | 205 | 67·6 | 57·3 | 10·3 | 0·0 | 0·0 | | | 3·0 | Much haze. |
| 5 | 190 | 68·1 | 57·0 | 11·1 | 0·0 | 0·0 | | | 2·0 | Id. |
| 6 | 172 | 67·2 | 56·0 | 11·2 | 0·0 | 0·0 | | | 2·0 | Id. |
| 7 | 159 | 63·5 | 54·5 | 9·0 | 0·0 | 0·0 | | | 1·0 | Id. |
| 8 | 168 | 58·1 | 52·0 | 6·1 | 0·0 | 0·0 | 6 | | 1·0 | Streaks of cirri to W.; thick haze on horizon. |
| 9 | 163 | 54·0 | 49·5 | 4·5 | 0·0 | 0·0 | | | 0·5 | Thick haze on horizon. |
| 10 | 160 | 50·0 | 47·1 | 2·9 | 0·0 | 0·0 | | | 0·2 | Id. |
| 11 | 156 | 45·7 | 44·2 | 1·5 | 0·0 | 0·0 | | | 0·0 | Haze on hor.; shooting star from Cassiopeia moving to E. |
| 12 | 151 | 43·6 | 42·8 | 0·8 | 0·0 | 0·0 | | | 0·0 | Rather less haze than before. |
| 13 | 30·140 | 41·1 | 40·9 | 0·2 | 0·0 | 0·0 | | | 0·0 | Nearly as last hour; heavy dew. |
| 14 | 130 | 38·9 | 38·7 | 0·2 | 0·0 | 0·0 | | | 0·0 | Heavy dew; clear. |
| 15 | 115 | 36·9 | 36·8 | 0·1 | 0·0 | 0·0 | | | 0·0 | Id. id. |
| 16 | 112 | 36·0 | 36·0 | ... | 0·0 | 0·0 | | | 0·2 | Fine cirri to N.; haze to E., red; stratus; dew. |
| 17 | 102 | 35·2 | 35·2 | ... | 0·0 | 0·0 | | | 1·5 | Lines of cirri lying N by E. to S by W.; Sun red; stratus. |
| 18 | 106 | 37·9 | 37·9 | ... | 0·0 | 0·0 | | —:—: 1 | 2·5 | Linear and crossed cirri; haze on hor. |
| 19 | 097 | 42·9 | 41·8 | 1·1 | 0·0 | 0·0 | | —:—: 2 | 6·0 | Cirri lying SSW. to NNE.; id. |
| 20 | 094 | 48·4 | 46·0 | 2·4 | 0·0 | 0·0 | | | 7·0 | Id.; more haze. |
| 21 | 096 | 53·6 | 49·6 | 4·0 | 0·0 | 0·0 | | —:—: 2 | 7·0 | Id.; hazy. |
| 22 | 084 | 58·2 | 52·9 | 5·3 | 0·0 | 0·0 | | | 7·0 | Id. |
| 23 | 074 | 59·8 | 53·0 | 6·8 | 0·0 | 0·0 | | —:—: 0 | 6·0 | Id. |
| 3 0 | 066 | 64·3 | 55·9 | 8·4 | 0·0 | 0·0 | | —:—: 0 | 7·0 | Id.; haze on horizon. |
| 1 | 056 | 65·5 | 54·3 | 11·2 | 0·0 | 0·0 | | —:—:31 | 7·0 | Cirri lying N. and S.; patches of scud to S. and E. |
| 2 | 048 | 69·5 | 55·1 | 14·4 | 0·0 | 0·0 | 12 | | 8·0 | Cirri, cirro-strati, and patches of scud. |
| 3 | 040 | 69·6 | 56·0 | 13·6 | 0·0 | 0·0 | 14 | —:—: 0 | 8·0 | Woolly cirri; cirro-strati to E.; patches of scud. |
| 4 | 037 | 66·3 | 54·6 | 11·7 | 0·3 | 0·1 | 12 | | 8·0 | Id.; scud to W. |
| 5 | 042 | 65·9 | 53·5 | 12·4 | 0·6 | 0·2 | 8 | | 6·0 | Id.; patch of scud to N.; solar halo. |
| 6 | 049 | 62·8 | 50·0 | 12·8 | 0·3 | 0·3 | 7 | 24:—: 0 | 7·0 | Var. of cirri; many patches of scud and cum.; halo. |
| 7 | 062 | 59·2 | 49·2 | 10·0 | 0·6 | 0·3 | 5 | 24:31: 0 | 7·0 | Nearly as before; cirro-cumulous scud. |
| 8 | 100 | 49·1 | 46·9 | 2·2 | 0·9 | 1·0 | 2 | 4: 0: 0 | 6·5 | Loose smoky scud; cirro-cumulo-strati; cirri. |
| 9 | 121 | 47·0 | 45·4 | 1·6 | 0·6 | 0·3 | 2 | 5:—:— | 7·0 | Thin scud; cirri radiating from NE by E.; sky milky. |
| 10 | 146 | 45·2 | 44·4 | 0·8 | 0·2 | 0·0 | 2 | 27:—:— | 5·0 | Id., sky clouded varying from 8 to 2. |
| 11 | 161 | 46·1 | 45·0 | 1·1 | 0·0 | 0·0 | | | 9·5 | Id. |
| 12 | 167 | 44·9 | 43·8 | 1·1 | 0·2 | 0·1 | 2 | | 3·0 | Loose scud. |
| 13 | 30·170 | 46·2 | 44·6 | 1·6 | 0·1 | 0·0 | | | 9·7 | Loose scud. |
| 14 | 165 | 46·1 | 44·7 | 1·4 | 0·3 | 0·1 | 4 | | 10·0 | Id. |
| 15 | 165 | 45·9 | 44·7 | 1·2 | 0·3 | 0·2 | 3 | | 10·0 | Id. |
| 16 | 161 | 44·3 | 44·1 | 0·2 | 0·2 | 0·1 | 3 | | 10·0 | Id.; very light drizzle. |
| 17 | 168 | 44·8 | 44·3 | 0·5 | 0·1 | 0·0 | | | 10·0 | Id.; id. |
| 18 | 173 | 45·0 | 44·4 | 0·6 | 0·1 | 0·1 | 3 | 4:—:— | 10·0 | Id.; id. |
| 19 | 174 | 45·3 | 44·6 | 0·7 | 0·1 | 0·0 | 3 | 4:—:— | 10·0 | Id.; id. |
| 20 | 177 | 46·0 | 45·2 | 0·8 | 0·1 | 0·1 | 3 | 4:—:— | 10·0 | Id.; id. |
| 21 | 177 | 46·1 | 45·5 | 0·6 | 0·1 | 0·1 | 3 | 4:—:— | 10·0 | Id.; id. |
| 22 | 172 | 47·6 | 46·6 | 1·0 | 0·1 | 0·0 | 3 | 3:—:— | 10·0 | Id.; id. |
| 23 | 165 | 47·6 | 46·5 | 1·1 | 0·2 | 0·2 | 2 | 3:—:— | 10·0 | Id.; id. |
| 4 0 | 170 | 48·2 | 46·7 | 1·5 | 0·3 | 0·1 | 3 | | 10·0 | Id.; id. |
| 1 | 160 | 48·8 | 46·8 | 2·0 | 0·3 | 0·1 | 3 | | 10·0 | Id.; id. |
| 2 | 157 | 49·2 | 47·3 | 1·9 | 0·3 | 0·2 | 2 | 4:—:— | 10·0 | Scud. |
| 3 | 135 | 49·8 | 47·7 | 2·1 | 0·5 | 0·4 | 2 | 4:—:— | 10·0 | Id. |
| 4 | 128 | 49·1 | 46·7 | 2·4 | 0·6 | 0·2 | 2 | 4:—:— | 10·0 | Id. |
| 5 | 121 | 48·2 | 46·1 | 2·1 | 0·2 | 0·1 | 2 | 4:—:— | 10·0 | Id. |
| 6 | 114 | 46·4 | 45·6 | 0·8 | 0·2 | 0·0 | | 4:—:— | 10·0 | Id. |
| 7 | 119 | 46·6 | 44·9 | 1·7 | 0·2 | 0·0 | 4 | 4:—:— | 10·0 | Id. |
| 8 | 114 | 45·7 | 43·9 | 1·8 | 0·2 | 0·0 | | 4:—:— | 10·0 | Id. |
| 9 | 111 | 45·0 | 43·4 | 1·6 | 0·1 | 0·0 | 3 | 4:—:— | 10·0 | Id. |
| 10 | 112 | 44·5 | 43·0 | 1·5 | 0·1 | 0·0 | | | 10·0 | Id. |

The direction of the wind is indicated by the number of the point of the compass, reckoning N. = 0, E. = 8, S. = 16, W. = 24. The motions of the three strata of clouds, Sc. (scud), C.-s. (cirro-stratus), and Cir. (cirrus), are indicated in a similar manner.

May 3d 8h. A great change in the temperature and humidity of the air since 7h; the wind feeling quite damp.

| Gött. Mean Time. | Barometer at 32°. | Thermometers. | | | Wind. | | | Clouds, Sc. : C.-s. : Ci., moving from | Sky clouded. | Species of Clouds and Meteorological Remarks. |
|---|---|---|---|---|---|---|---|---|---|---|
| | | Dry. | Wet. | Diff. | Maximum force in 1h. | Maximum force in 10m. | From | | | |
| d. h. | in. | ° | ° | ° | lbs. | lbs. | pt. | pt. pt. pt. | 0—10. | |
| 4 11 | 30·099 | 44·1 | 43·0 | 1·1 | 0·0 | 0·0 | | | 10·0 | Scud; dark. |
| 12 | 096 | 43·8 | 42·5 | 1·3 | 0·1 | 0·0 | 3 | | 10·0 | Id.; id. |
| 23 | 29·990 | ... | ... | ... | 0·1 | 0·1 | 4 | | | |
| 5 6½ | 889 | ... | ... | ... | ... | ... | 5 | 6 : 14 : 26 | | Loose scud; ragged cumuli, cumulo-strati; woolly cirri. |
| 13 | 29·834 | 46·6 | 46·5 | 0·1 | 0·9 | 0·0 | | | 10·0 | Thick fog; very slight drizzle. |
| 14 | 818 | 46·4 | 46·3 | 0·1 | 0·0 | 0·0 | | | 10·0 | Id.; id. |
| 15 | 800 | 46·1 | 46·0 | 0·1 | 0·0 | 0·0 | | | 10·0 | Id.; id. |
| 16 | 777 | 46·2 | 46·0 | 0·2 | 0·0 | 0·0 | | | 10·0 | Id.; id. |
| 17 | 769 | 45·9 | 45·7 | 0·2 | 0·0 | 0·0 | 8 | | 10·0 | Scud; fog. |
| 18 | 759 | 46·0 | 45·6 | 0·4 | 0·0 | 0·0 | 8 | 4 : — : — | 10·0 | Id.; fog nearly cleared off. |
| 19 | 747 | 47·0 | 46·3 | 0·7 | 0·0 | 0·0 | | | 10·0 | Id.; cirri. |
| 20 | 743 | 47·4 | 46·9 | 0·5 | 0·0 | 0·0 | | — : — : 1 | 8·0 | Woolly cirri; scud all round. |
| 21 | 736 | 50·9 | 48·8 | 2·1 | 0·0 | 0·0 | | | 3·0 | Thin cirri, haze below; faint solar halo. |
| 22 | 721 | 53·4 | 50·2 | 3·2 | 0·0 | 0·0 | | | 3·0 | Thin woolly cirri and cirrous haze. |
| 23 | 707 | 57·1 | 52·8 | 4·3 | 0·0 | 0·0 | | | 0·5 | Haze. |
| 6 0 | 679 | 62·0 | 55·5 | 6·5 | 0·0 | 0·0 | | 16 : — : — | 7·0 | Loose cumuli; very hazy round horizon. |
| 1 | 655 | 68·1 | 57·4 | 10·7 | 0·6 | 0·5 | 14 | | 7·0 | Id. |
| 2 | 637 | 70·5 | 57·5 | 13·0 | 0·9 | 0·5 | 15 | 16 : — : — | 8·0 | Loose cumuli and scud; thick haze. |
| 3 | 617 | 68·0 | 56·0 | 12·0 | 1·2 | 0·4 | 14 | | 8·0 | Id.; id. |
| 4 | 596 | 66·2 | 55·2 | 11·0 | 1·2 | 0·9 | 14 | 18 : — : — | 9·0 | Id. |
| 5 | 587 | 64·5 | 54·9 | 9·6 | 1·2 | 0·7 | 15 | 17 : — : — | 9·5 | Id.; cirri; drops of rain; hazy. |
| 6 | 585 | 62·3 | 56·2 | 6·1 | 1·1 | 0·3 | 15 | 17 : 18 : — | 9·0 | Scud and cum., two currents; cirri; light rain; hazy. |
| 7 | 576 | 62·8 | 56·0 | 6·8 | 0·2 | 0·1 | 14 | 17 : 18 : — | 7·5 | As before; no rain; haze clearing off. |
| 8 | 584 | 61·0 | 53·0 | 8·0 | 0·1 | 0·0 | 19 | | 9·0 | Id.; cirri near horizon; large drops of rain. |
| 9 | 589 | 56·1 | 51·7 | 4·4 | 0·0 | 0·0 | 17 | 17 : — : — | 7·5 | Scud; cirrous haze and cirri to W.; hazy to E. |
| 10 | 592 | 54·6 | 49·6 | 5·0 | 0·0 | 0·0 | | | 7·0 | Id.; id.; stars dim. |
| 11 | 586 | 51·6 | 48·0 | 3·6 | 0·0 | 0·0 | | | 0·5 | Haze over the sky; patches of scud to NW. |
| 12 | 587 | 53·0 | 48·2 | 4·8 | 0·4 | 0·0 | 14 | | 0·0 | Hazy; stars very dim. |
| 13 | 29·581 | 49·6 | 46·7 | 2·9 | 0·0 | 0·0 | | | 0·0 | Hazy; stars very dim. |
| 14 | 570 | 50·1 | 47·0 | 3·1 | 0·0 | 0·0 | | | 8·0 | Scud; cirrous clouds and haze? |
| 15 | 569 | 50·8 | 47·5 | 3·3 | 0·0 | 0·0 | | | 8·5 | Scud and loose cumuli; hazy. |
| 16 | 573 | 50·1 | 47·7 | 2·4 | 0·0 | 0·0 | | 18 : — : — | 10·0 | Scud. |
| 17 | 570 | 49·6 | 47·9 | 1·7 | 0·0 | 0·0 | | 16 : — : — | 10·0 | Id.; much haze. |
| 18 | 587 | 49·4 | 47·7 | 1·7 | 0·0 | 0·0 | | 16 : — : — | 10·0 | Id.; cirro-strati; drops of rain; Sun rose very red. |
| 19 | 609 | 48·2 | 46·2 | 2·0 | 0·0 | 0·0 | | 19 : — : — | 10·0 | Thick scud, moving very slowly; colour dappled gray. |
| 20 | 628 | 48·2 | 44·3 | 3·9 | 0·0 | 0·0 | 30 | | 10·0 | Id.; heavy shower of rain, large drops. |
| 21 | 642 | 47·0 | 44·5 | 2·5 | 0·0 | 0·0 | 28 | 20 : — : — | 10·0 | Scud; rain. |
| 22 | 652 | 50·2 | 45·9 | 4·3 | 0·1 | 0·1 | 29 | 19 : — : — | 10·0 | Id. |
| 23 | 652 | 54·8 | 48·4 | 6·4 | 0·1 | 0·0 | 24 | 21 : — : — | 10·0 | Id. |
| 7 0 | 659 | 57·6 | 51·0 | 6·6 | 0·0 | 0·0 | 24 | 20 : — : — | 9·0 | Cirro-cumulous scud. |
| 1 | 655 | 60·7 | 53·1 | 7·6 | 0·0 | 0·0 | 28 | 16 : — : — | 9·0 | Id., loose cumuli; cirri. |
| 2 | 654 | 61·9 | 52·7 | 9·2 | 0·0 | 0·0 | 14 | 22, 26, 1 : — : 18 | 7·5 | Scud and loose cumuli from various points; cirri. |
| 3 | 654 | 59·5 | 50·5 | 9·0 | 0·0 | 0·0 | 24 | 20 : — : — | 8·5 | Loose cumuli and scud; cirri. |
| 4 | 654 | 62·8 | 52·0 | 10·8 | 0·0 | 0·0 | 28 | 18 : — : — | 9·5 | Id. |
| 5 | 657 | 57·1 | 50·1 | 7·0 | 0·1 | 0·0 | 3 | 20 : — : — | 8·0 | Id., with cirro-cumulous disposition. |
| 6 | 668 | 55·0 | 49·0 | 6·0 | 0·0 | 0·0 | | 18 : — : — | 8·0 | Cirro-cumulous scud; cirri; patches of ragged scud. |
| 7 | 676 | 53·8 | 48·0 | 5·8 | 0·0 | 0·0 | | 18 : — : — | 4·0 | Id.; cirrous haze and cirri. |
| 8 | 694 | 51·7 | 46·9 | 4·8 | 0·0 | 0·0 | | 18 : — : — | 3·0 | Scud; cirrous haze to N. |
| 9 | 713 | 48·7 | 45·3 | 3·4 | 0·0 | 0·0 | | 18 : — : — | 3·0 | Id.; id. |
| 10 | 730 | 43·5 | 42·4 | 1·1 | 0·0 | 0·0 | | | 1·0 | Id.; cirro-strati, cirrous haze. |
| 11 | 740 | 42·6 | 41·8 | 0·8 | 0·0 | 0·0 | | | 1·0 | Id. |
| 12 | 752 | 38·2 | 38·0 | 0·2 | 0·0 | 0·0 | | | 1·0 | Clouds and haze on horizon; clear in zenith. |
| 13 | 29·750 | 37·2 | 36·9 | 0·3 | 0·0 | 0·0 | | | 0·5 | Clouds and haze on horizon. |
| 14 | 746 | 37·0 | 36·7 | 0·3 | 0·0 | 0·0 | | | 0·5 | Id. |
| 15 | 751 | 35·2 | 35·0 | 0·2 | 0·0 | 0·0 | | | 0·5 | Scud to W.; cirri and cirro-strati to E. |

The direction of the wind is indicated by the number of the point of the compass, reckoning N. = 0, E. = 8, S. = 16, W. = 24. The motions of the three strata of clouds, Sc. (scud), C.-s. (cirro-stratus), and Cir. (cirrus), are indicated in a similar manner.

| Gött. Mean Time. | Barometer at 32°. | Thermometers. Dry. | Wet. | Diff. | Wind. Maximum force in 1h. | 10m. | From | Clouds, Sc. : C.-s. : Ci., moving from | Sky clouded. | Species of Clouds and Meteorological Remarks. |
|---|---|---|---|---|---|---|---|---|---|---|
| d. h. | in. | ° | ° | ° | lbs. | lbs. | pt. | pt. pt. pt. | 0—10. | |
| 7 16 | 29·752 | 36·5 | 35·9 | 0·6 | 0·0 | 0·0 | | — : 23 : — | 4·0 | Cirro-stratous scud; cirri, cirro-strati, and cirrous haze. |
| 17 | 764 | 35·2 | 34·8 | 0·4 | 0·0 | 0·0 | | — : 23 : — | 4·0 | Cirro-cumulous scud; thick scud to N. and S.; cirri. |
| 18 | 768 | 38·0 | 37·0 | 1·0 | 0·0 | 0·0 | | 20 : — : — | 8·0 | Scud and loose cumuli; cirri, cirro-strati, cirrous haze. |
| 19 | 779 | 41·6 | 39·5 | 2·1 | 0·0 | 0·0 | | 20 : — : — | 8·0 | Scud; cirro-strati on horizon. |
| 20 | 782 | 46·0 | 42·3 | 3·7 | 0·0 | 0·0 | | 20 : — : — | 8·0 | Id.; id. |
| 21 | 784 | 51·0 | 46·8 | 4·2 | 0·0 | 0·0 | 2 | 18 : — : — | 6·0 | Cirro-cumulous scud; very hazy to E. |
| 22 | 782 | 52·3 | 46·4 | 5·9 | 0·0 | 0·0 | | | 2·0 | Cirri, cirro-strati, and masses of cumuli. |
| 23 | 778 | 55·2 | 48·2 | 7·0 | 0·0 | 0·0 | | | 2·0 | Scud and cumuli; cirri and cirrous haze. |
| 8 0 | 765 | 58·1 | 50·0 | 8·1 | 0·0 | 0·0 | | 17 : — : — | 7·0 | Scud; cirrous haze on horizon. |
| 1 | 750 | 62·1 | 53·6 | 8·5 | 0·0 | 0·0 | | 19 : — : — | 8·5 | Scud and loose cumuli. |
| 2 | 744 | 62·6 | 52·9 | 9·7 | 0·0 | 0·0 | | 18 : — : — | 8·5 | Id. |
| 3 | 734 | 62·0 | 54·6 | 7·4 | 0·1 | 0·0 | 4 | 18 : — : — | 8·0 | Id.; cirri. |
| 4 | 718 | 62·9 | 54·5 | 8·4 | 0·1 | 0·0 | 7 | 18 : — : — | 7·0 | Id.; linear cirri and cirrous haze. |
| 5 | 709 | 61·0 | 53·2 | 7·8 | 0·0 | 0·0 | 4 | 15 : 19 : — | 9·0 | Cumuli, cumulo-strati; loose scud; fine cirri; hazy. |
| 6 | 703 | 62·0 | 54·0 | 8·0 | 0·2 | 0·2 | 15 | 20 : — : — | 9·5 | Scud and loose cumuli; very hazy on E. horizon. |
| 7 | 711 | 58·0 | 50·0 | 8·0 | 0·6 | 0·2 | 14 | | 9·5 | Id.; cirri to N. |
| 8 | 726 | 54·2 | 48·0 | 6·2 | 0·4 | 0·2 | 14 | | 6·0 | Scud, cirro-strati, and woolly cirri. |
| 9 | 745 | 51·0 | 46·6 | 4·4 | 0·2 | 0·0 | 16 | | 3·0 | Patches of scud; cirrous haze. |
| 10 | 752 | 47·2 | 43·9 | 3·3 | 0·0 | 0·0 | 16 | | 3·0 | Cirri and cirrous haze. |
| 11 | 763 | 44·3 | 41·6 | 2·7 | 0·0 | 0·0 | | | 1·5 | Cirri to N. and E. |
| 12 | 767 | 41·9 | 39·7 | 2·2 | 0·0 | 0·0 | | | 1·0 | Id. |
| 13 | 29·765 | 39·7 | 38·0 | 1·7 | 0·0 | 0·0 | | | 0·5 | Cirri to N. and E. |
| 14 | 759 | 35·5 | 35·0 | 0·5 | 0·0 | 0·0 | | | 0·5 | Id. |
| 15 | 763 | 33·8 | 33·5 | 0·3 | 0·0 | 0·0 | | | 0·5 | Id. |
| 16 | 762 | 32·0 | 31·8 | 0·2 | 0·0 | 0·0 | | — : — : 26 | 1·0 | Woolly and diffuse cirri; mist from the river. |
| 17 | 762 | 34·0 | 33·4 | 0·6 | 0·0 | 0·0 | | — : — : 26 | 1·5 | Id.; Sun risen very red. |
| 18 | 763 | 35·9 | 35·1 | 0·8 | 0·0 | 0·0 | 16 | — : — : 20 | 2·5 | Id.; hazy cirri to E. |
| 19 | 768 | 41·2 | 39·9 | 1·3 | 0·0 | 0·0 | | | 3·0 | Woolly cirri lying N. and S. |
| 20 | 764 | 46·3 | 43·3 | 3·0 | 0·0 | 0·0 | | — : — : 20 | 6·0 | Woolly cirri and cirrous haze; thick haze on horizon. |
| 21 | 765 | 51·9 | 46·5 | 5·4 | 0·0 | 0·0 | | — : — : 23 | 7·0 | Woolly and linear cirri and cirrous haze. |
| 22 | 748 | 55·6 | 48·3 | 7·3 | 0·0 | 0·0 | | | 7·0 | Id. |
| 23 | 746 | 59·0 | 51·2 | 7·8 | 0·0 | 0·0 | | — : 22 : 22 | 8·0 | Cirri and cirro-cumuli. |
| 9 0 | 727 | 63·8 | 54·7 | 9·1 | 0·0 | 0·0 | | — : 22 : — | 9·7 | Cirro-cumulo-strati. |
| 1 | 719 | 63·8 | 54·2 | 9·6 | 0·2 | 0·2 | 19 | — : 22 : — | 9·0 | Cirro-cumuli, cirro-strati. |
| 2 | 718 | 63·7 | 53·0 | 10·7 | 0·4 | 0·1 | 18 | — : 24 : — | 7·0 | Id. id.; thick haze on E. horizon. |
| 3 | 709 | 67·1 | 55·6 | 11·5 | 0·4 | 0·1 | 19 | | 8·0 | Cirro-cumulo and cirro-strati nearly stationary. |
| 4 | 705 | 64·0 | 54·0 | 10·0 | 0·2 | 0·2 | 18 | 18 : 24 : — | 9·0 | Patches of scud; cirro-cumulo, cirro-strati; cum. to E. |
| 5 | 707 | 60·0 | 52·7 | 7·3 | 0·2 | 0·1 | 20 | 18 : — : 19 | 9·7 | Cirro-stratous scud; woolly cirri. |
| 6 | 709 | 58·0 | 51·9 | 6·1 | 0·2 | 0·1 | 20 | — : 19 : — | 9·9 | Uniform mass of cirro-strati; scud; drops of rain. |
| 7 | 715 | 53·0 | 51·5 | 1·5 | 0·0 | 0·0 | 20 | 20 : 19 : — | 10·0 | Id.; id.; slight shower. |
| 8 | 714 | 52·2 | 51·3 | 0·9 | 0·0 | 0·0 | 20 | 20 : 19 : — | 10·0 | Id.; id.; still raining. |
| 9 | 715 | 51·2 | 50·8 | 0·4 | 0·0 | 0·0 | 20 | | 10·0 | As before. |
| 10 | 708 | 50·7 | 50·3 | 0·4 | 0·0 | 0·0 | 20 | | 10·0 | Id. |
| 11 | 700 | 50·7 | 50·0 | 0·7 | 0·0 | 0·0 | | | 10·0 | Light rain. |
| 12 | 685 | 50·5 | 50·1 | 0·4 | 0·0 | 0·0 | | | 10·0 | Raining. |
| 13 | 29·675 | 50·3 | 50·0 | 0·3 | 0·0 | 0·0 | | | 10·0 | Light rain. |
| 14 | 663 | 50·0 | 49·4 | 0·6 | 0·0 | 0·0 | | | 10·0 | Id. |
| 15 | 664 | 48·8 | 47·0 | 1·8 | 0·0 | 0·2 | 24 | | 9·7 | Sky on N. horizon. |
| 16 | 669 | 46·8 | 44·2 | 2·6 | 0·3 | 0·0 | | | 9·7 | Loose scud; cirro-strati and cirrous clouds. |
| 17 | 674 | 45·2 | 43·3 | 1·9 | 0·1 | 0·0 | | 25 : 20 : — | 8·0 | Id.; thicker scud. |
| 18 | 681 | 42·9 | 40·4 | 2·5 | 0·0 | 0·0 | 25 | | 2·0 | Scud to E.; loose scud lying on Cheviot. |
| 19 | 688 | 44·2 | 41·4 | 2·8 | 0·0 | 0·0 | 26 | 0 : — : — | 5·0 | Scud. |
| 20 | 695 | 47·0 | 43·0 | 4·0 | 0·0 | 0·0 | 26 | 29 : 0 : — | 9·7 | Loose scud in patches; thicker scud above. |
| 21 | 700 | 43·4 | 42·2 | 1·2 | 0·3 | 0·5 | 29 | 28 : — : — | 10·0 | Scud; rain. |
| 22 | 701 | 45·5 | 44·1 | 1·4 | 0·1 | 0·1 | 28 | 31 : — : — | 10·0 | Id.; id. |
| 23 | 692 | 46·3 | 44·9 | 1·4 | 0·4 | 0·2 | 30 | 4 : 28 : — | 10·0 | Scud in two currents; raining. |

The direction of the wind is indicated by the number of the point of the compass, reckoning N. = 0, E. = 8, S. = 16, W. = 24. The motions of the three strata of clouds, Sc. (scud), C.-s. (cirro-stratus), and Cir. (cirrus), are indicated in a similar manner.

| Gött. Mean Time. | Barometer at 32°. | Thermometers. Dry. | Wet. | Diff. | Wind. Maximum force in 1h. | 10m. | From | Clouds, Sc. : C.-s. : Ci., moving from | Sky clouded. | Species of Clouds and Meteorological Remarks. |
|---|---|---|---|---|---|---|---|---|---|---|
| d. h. | in. | ° | ° | ° | lbs. | lbs. | pt. | pt. pt. pt. | 0—10. | |
| 10 0 | 29·687 | 50·1 | 47·3 | 2·8 | 0·7 | 0·9 | 30 | 31 : 2 : — | 10·0 | Scud in two currents; raining. |
| 1 | 691 | 51·2 | 48·2 | 3·0 | 0·7 | 0·2 | 29 | 30 : 2 : — | 10·0 | Id. |
| 2 | 703 | 50·9 | 48·0 | 2·9 | 1·1 | 0·6 | 27 | 30 : 2 : — | 10·0 | Id. |
| 3 | 717 | 49·3 | 47·9 | 1·4 | 1·2 | 1·1 | 31 | 0 : — : — | 10·0 | Scud. |
| 4 | 733 | 47·4 | 47·2 | 0·2 | 1·3 | 0·9 | 2 | 2 : — : — | 10·0 | Id.; rain[3] |
| 5 | 737 | 50·0 | 48·0 | 2·0 | 0·8 | 0·8 | 2 | 2 : — : — | 9·8 | Loose scud; thick cirrous clouds. |
| 6 | 753 | 49·3 | 47·4 | 1·9 | 0·8 | 0·7 | 0 | 1 : — : — | 10·0 | Scud. |
| 7 | 754 | 48·3 | 47·1 | 1·2 | 0·8 | 0·2 | 0 | 0 : — : — | 10·0 | Id. |
| 8 | 772 | 47·9 | 47·3 | 0·6 | 1·0 | 0·1 | 0 | 1 : — : — | 10·0 | Id.; rain[1] |
| 9 | 790 | 47·9 | 47·1 | 0·8 | 0·9 | 1·5 | 2 | 1 : — : — | 10·0 | Id.; id. |
| 10 | 796 | 47·6 | 46·9 | 0·7 | 1·7 | 0·3 | 3 | | 10·0 | Id. |
| 11 | 801 | 48·0 | 47·0 | 1·0 | 0·8 | 0·2 | 2 | | 10·0 | Id. |
| 12 | 801 | 47·3 | 47·0 | 0·3 | 1·1 | 0·9 | 1 | | 10·0 | Very dark; rain[1] |
| 13 | 29·805 | 47·5 | 47·0 | 0·5 | 0·8 | 0·5 | 2 | | 10·0 | Very dark; fair. |
| 14 | 806 | 47·9 | 47·0 | 0·9 | 1·1 | 0·3 | 2 | | 10·0 | Id. |
| 15 | 820 | 47·4 | 46·8 | 0·6 | 0·5 | 0·2 | 2 | | 10·0 | Id. |
| 16 | 821 | 47·2 | 46·5 | 0·7 | 0·5 | 0·2 | 2 | | 10·0 | Scud. |
| 17 | 830 | 47·1 | 46·3 | 0·8 | 0·8 | 0·2 | 2 | 1 : — : — | 10·0 | Id.; rain[1] |
| 18 | 849 | 47·1 | 46·6 | 0·5 | 0·1 | 0·0 | | 1 : — : — | 10·0 | Id.; fair. |
| 19 | 871 | 48·0 | 47·0 | 1·0 | 0·4 | 0·0 | 2 | 1 : — : — | 10·0 | Id. |
| 20 | 880 | 48·1 | 47·1 | 1·0 | 0·1 | 0·0 | | | 10·0 | A nearly uniform covering of scud. |
| 21 | 888 | 49·3 | 47·9 | 1·4 | 0·1 | 0·2 | 1 | 2 : — : — | 10·0 | Thick scud. |
| 22 | 888 | 50·0 | 48·5 | 1·5 | 0·5 | 0·6 | 2 | | 10·0 | Id. |
| 23 | 895 | 50·1 | 48·5 | 1·6 | 0·5 | 0·2 | 2 | | 10·0 | Id. |
| 11 0 | 894 | 50·7 | 48·7 | 2·0 | 0·4 | 0·1 | 3 | 2 : — : — | 10·0 | Id. |
| 1 | 902 | 51·0 | 49·0 | 2·0 | 0·2 | 0·1 | 3 | 2 : — : — | 10·0 | Id. |
| 2 | 906 | 52·1 | 50·0 | 2·1 | 0·2 | 0·1 | 2 | 2 : — : — | 10·0 | Id. |
| 3 | 897 | 53·0 | 50·6 | 2·4 | 0·0 | 0·0 | 4 | 2 : — : — | 10·0 | Id.; slight break to NW. |
| 4 | 899 | 52·9 | 50·8 | 2·1 | 0·0 | 0·0 | | 2 : — : — | 10·0 | Id. |
| 5 | 895 | 51·6 | 50·0 | 1·6 | 0·0 | 0·0 | | 2 : — : — | 10·0 | Id. |
| 6 | 897 | 51·9 | 50·1 | 1·8 | 0·0 | 0·0 | 2 | | 10·0 | Uniform mass of scud. |
| 7 | 895 | 51·3 | 50·0 | 1·3 | 0·0 | 0·0 | 8 | | 10·0 | Id. |
| 8 | 905 | 51·2 | 50·0 | 1·2 | 0·0 | 0·0 | | | 10·0 | Id.; 8h 40m a break in scud, woolly cirri. |
| 9 | 914 | 50·0 | 49·3 | 0·7 | 0·0 | 0·0 | | | 10·0 | Cir.-cum. scud to W.; cir.-str. tinged with yellow. |
| 10 | 902 | 50·4 | 49·8 | 0·6 | 0·0 | 0·0 | | | 10·0 | Scud. |
| 11 | 919 | 50·6 | 49·7 | 0·9 | 0·0 | 0·0 | | | 10·0 | Id. |
| 12 | 922 | 49·3 | 48·6 | 0·7 | 0·0 | 0·0 | | | 10·0 | Thick scud, dark. |
| 23 | 29·964 | ... | ... | ... | 0·0 | 0·0 | 24 | | ..... | A solar halo in the afternoon. |
| 12 13 | 30·090 | 48·3 | 47·0 | 1·3 | 0·8 | 0·0 | | | 2·0 | Cirro-strati, cirrous haze; stars dim. |
| 14 | 096 | 47·2 | 45·4 | 1·8 | 0·0 | 0·0 | | | 1·0 | Id., id. |
| 15 | 114 | 47·0 | 44·5 | 2·5 | 0·0 | 0·0 | | | 2·0 | Id., id.; cumuli on NE. horizon. |
| 16 | 104 | 44·6 | 42·8 | 1·8 | 0·0 | 0·0 | | | 2·0 | Cirri, cir.-str., and cir. haze; scud and cum. to NE. |
| 17 | 120 | 41·7 | 40·9 | 0·8 | 0·0 | 0·0 | | | 4·0 | Id.; id. |
| 18 | 132 | 45·3 | 44·0 | 1·3 | 0·0 | 0·0 | | 7 : — : — | 9·0 | Scud; cirrous clouds and haze. |
| 19 | 149 | 49·7 | 46·7 | 3·0 | 0·0 | 0·0 | | — : 24 : — | 9·9 | Cirro-stratous scud, moving very slowly. |
| 20 | 157 | 54·1 | 49·3 | 4·8 | 0·0 | 0·0 | 22 | — : 30 : — | 9·5 | Id.; linear cirri and cirrous haze. |
| 21 | 162 | 53·5 | 48·5 | 5·0 | 0·0 | 0·0 | 12 | | 9·5 | Scud; linear cirri to NW.; cirro-strati to S. |
| 22 | 160 | 54·8 | 49·0 | 5·8 | 0·0 | 0·0 | 20 | 23 : — : 24 | 5·5 | Scud and loose cumuli; varieties of cirri; cirrous haze. |
| 23 | 158 | 56·9 | 50·3 | 6·6 | 0·0 | 0·0 | 20 | — : — : 28 | 8·0 | Id. on horizon; cirri. |
| 13 0 | 147 | 58·9 | 50·5 | 8·4 | 0·0 | 0·0 | | — : — : 26 | 7·0 | Cirri and cirrous haze; patches of loose cumuli to SE. |
| 1 | 137 | 62·1 | 53·0 | 9·1 | 0·0 | 0·0 | 24 | | 8·7 | Thick cirri and cirrous haze; faint solar halo. |
| 2 | 116 | 64·8 | 54·9 | 9·9 | 0·0 | 0·0 | 20 | — : — : 24 | 9·0 | Id.; id. |
| 3 | 108 | 68·0 | 57·0 | 11·0 | 0·0 | 0·0 | 20 | | 9·5 | As before, no scud; solar halo. |
| 4 | 094 | 69·0 | 58·1 | 10·9 | 0·0 | 0·5 | 28 | — : 25 : 28 | 9·0 | Cir.-cum.; cirri; cir.-str. to W.; patch of scud to S. |
| 5 | 085 | 68·8 | 58·2 | 10·6 | 1·1 | 0·2 | 24 | 26 : — : — | 9·5 | Scud; cirri and cirro-strati; mottled cirri to S. |

The direction of the wind is indicated by the number of the point of the compass, reckoning N. = 0, E. = 8, S. = 16, W. = 24. The motions of the three strata of clouds, Sc. (scud), C.-s. (cirro-stratus), and Cir. (cirrus), are indicated in a similar manner.

May 10d 4h. The heaviness of the rain falling has been estimated upon the supposition that the heaviest fall is 10, and the estimations are given as above "rain[3]."

May 10d 19h. Observations made at 19h 10m.

| Gött. Mean Time. | | Barometer at 32°. | Thermometers. | | | Wind. | | | Clouds, Sc. : C.-s. : Ci., moving from | Sky clouded. | Species of Clouds and Meteorological Remarks. |
|---|---|---|---|---|---|---|---|---|---|---|---|
| | | | Dry. | Wet. | Diff. | Maximum force in 1h. | Maximum force in 10m. | From | | | |
| d. | h. | in. | ° | ° | ° | lbs. | lbs. | pt. | pt. pt. pt. | 0–10. | |
| 13 | 6 | 30·091 | 66·0 | 57·6 | 8·4 | 0·2 | 0·2 | 26 | | 9·7 | Cirro-strati and cirri. |
| | 7 | 100 | 62·6 | 56·3 | 6·3 | 0·5 | 0·3 | 29 | — : 26 : 26 | 9·5 | Cirro-cumulous scud, cirro-strati ; cirri and cir. haze. |
| | 8 | 109 | 59·5 | 54·9 | 4·6 | 0·3 | 0·3 | 24 | 25 : 26 : 26 | 10·0 | Loose scud ; cirro-cumuli, cirro-strati ; woolly cirri. |
| | 9 | 102 | 58·6 | 54·8 | 3·8 | 0·4 | 0·0 | 26 | 24 : — : — | 9·5 | Id. ; mottled cirri, cirro-cumuli. |
| | 10 | 090 | 57·9 | 54·7 | 3·2 | 0·3 | 0·1 | 23 | | 9·0 | Id. ; cirro-cumulous scud, cirro-strati. |
| | 11 | 093 | 57·8 | 54·0 | 3·8 | 0·5 | 0·1 | 23 | | 9·5 | Id. ; id. id. |
| | 12 | 093 | 57·1 | 53·8 | 3·3 | 0·5 | 0·2 | 26 | 28 : — : — | 9·0 | Thick scud lying in a belt from NW. to SE. |
| | 13 | 30·080 | 55·2 | 52·9 | 2·3 | 0·8 | 0·2 | 25 | | 8·0 | Clear in zenith. |
| | 14 | 073 | 56·6 | 52·7 | 3·9 | 0·9 | 0·1 | 26 | | 9·5 | Masses of scud. |
| | 15 | 090 | 55·1 | 52·3 | 2·8 | 0·3 | 0·0 | | | 9·9 | Scud. |
| | 16 | 083 | 53·9 | 51·1 | 2·8 | 0·1 | 0·0 | 25 | 26 : — : — | 8·5 | Id. ; cirri, cirro-strati, cir.-cum. ; clouds red to E. |
| | 17 | 096 | 53·6 | 51·3 | 2·3 | 0·2 | 0·1 | 25 | 31 : 26 : — | 8·0 | Id. in two currents ; cirri, cir.-str. ; scud on Cheviot. |
| | 18 | 105 | 53·5 | 51·5 | 2·0 | 0·1 | 0·0 | 25 | 31 : — : — | 8·0 | Id. ; cirri, cirro-strati ; dense mass on Cheviot. |
| | 19 | 120 | 55·2 | 51·9 | 3·3 | 0·0 | 0·0 | | | 2·0 | Loose scud ; cirro-strati. |
| | 20 | 122 | 57·0 | 52·7 | 4·3 | 0·2 | 0·2 | 3 | 3, 30 : 2 : — | 3·5 | Loose scud in two currents ; cirro-cumulous scud. |
| | 21 | 181 | 48·2 | 46·3 | 1·9 | 0·9 | 0·2 | 3 | | 10·0 | Uniform mass of scud. |
| | 22 | 193 | 47·9 | 45·7 | 2·2 | 0·2 | 0·0 | 3 | 4 : — : — | 10·0 | Id. |
| | 23 | 198 | 49·0 | 45·9 | 3·1 | 0·2 | 0·0 | 6 | 5 : — : — | 10·0 | Scud. |
| 14 | 0 | 203 | 50·7 | 46·8 | 3·9 | 0·1 | 0·0 | | 5 : — : — | 10·0 | Id. |
| | 1 | 208 | 51·8 | 47·1 | 4·7 | 0·1 | 0·1 | 6 | 5 : — : — | 10·0 | Id. ; dense cirro-strati. |
| | 2 | 210 | 53·9 | 47·7 | 5·2 | 0·1 | 0·0 | | | 10·0 | Dense cirro-strati and cirrous haze. |
| | 3 | 203 | 52·9 | 47·1 | 5·8 | 0·0 | 0·0 | | — : 2 : — | 9·7 | Clouds broken up into cir.-str. scud ; cirri, cirro-strati. |
| | 4 | 198 | 55·0 | 48·7 | 6·3 | 0 0 | 0·0 | | — : 1 : 28 | 9·5 | Cirro-stratous scud ; woolly and mottled cirri. |
| | 5 | 199 | 53·1 | 47·0 | 6·1 | 0·0 | 0·0 | | 2 : — : 30 | 10·0 | Patches of scud ; woolly cirri and cirrous haze. |
| | 6 | 193 | 52·5 | 46·8 | 5·7 | 0·0 | 0·0 | | — : 30 : 30 | 10·0 | Woolly cirri and cirro-strati. |
| | 7 | 201 | 51·1 | 45·6 | 5·5 | 0·0 | 0·0 | | — : 30 : — | 10·0 | Id. ; narrow belt of dark cir.-str. lying [NNW. to SSE. |
| | 8 | 204 | 49·1 | 44·8 | 4·3 | 0·0 | 0·0 | 6 | — : 25 : — | 9·5 | Cirro-strati lying E. and W. ; cirri and cirrous haze. |
| | 9 | 204 | 46·4 | 43·7 | 2·7 | 0·0 | 0·0 | | 27 : — : — | 9·0 | Loose scud ; cirri and haze. |
| | 10 | 213 | 46·3 | 43·3 | 3·0 | 0·0 | 0·0 | | | 8·0 | Scud ; cirrous clouds and haze. |
| | 11 | 225 | 44·8 | 43·0 | 1·8 | 0·0 | 0·0 | | | 9·7 | Id. ; id. |
| | 12 | 237 | 44·3 | 42·4 | 1·9 | 0·0 | 0·0 | | | 7·0 | Id. ; cirri. |
| | 13 | 30·229 | 44·0 | 42·4 | 1·6 | 0·0 | 0·0 | | | 7·0 | Scud ; cirri ; sky in zenith. |
| | 14 | 226 | 44·0 | 42·9 | 1·1 | 0·0 | 0·0 | | | 7·0 | Id. ; id. ; id. |
| | 15 | 227 | 44·4 | 43·4 | 1·0 | 0·0 | 0·0 | | | 10·0 | Id. |
| | 16 | 227 | 44·4 | 42·7 | 1·7 | 0·0 | 0·0 | | 1 : — : — | 10·0 | Id. ; woolly cirri in narrow bands lying NW. and SE. |
| | 17 | 233 | 44·7 | 42·3 | 2·4 | 0·0 | 0·0 | 2 | 2 : — : 0 | 9·7 | Id. ; woolly cirri. |
| | 18 | 243 | 45·0 | 43·0 | 2·0 | 0·0 | 0·0 | | — : 0 : — | 9·0 | Loose woolly cirro-cumuli ; fine linear cirri. |
| | 19 | 240 | 48·0 | 43·4 | 4·6 | 0·0 | 0·0 | | — : 0 : — | 9·5 | Id. ; cirri and cirro-strati. |
| | 20 | 247 | 49·2 | 44·0 | 5·2 | 0·0 | 0·0 | 4 | | 8·0 | Cirri and cirro-strati ; patches of scud. |
| | 21 | 255 | 50·0 | 46·3 | 3·7 | 0·0 | 0·0 | | 0 : — : — | 4·0 | Masses of scud ; linear cirri to S. |
| | 22 | 254 | 50·9 | 44·2 | 6·7 | 0·1 | 0·0 | 1 | 31 : — : — | 3·0 | Thin scud. |
| | 23 | 260 | 52·5 | 45·7 | 6·8 | 0·0 | 0·0 | 12 | | 2·5 | Scud ; cirri. |
| 15 | 0 | 253 | 53·2 | 46·1 | 7·1 | 0·0 | 0·0 | 4 | 30 : — : — | 4·0 | Thin scud. |
| | 1 | 240 | 53·0 | 46·1 | 6·9 | 0·1 | 0·0 | 6 | | 0·5 | Patches of scud ; linear cirri. |
| | 2 | 233 | 54·1 | 46·5 | 7·6 | 0·0 | 0·0 | 12 | | 0·5 | Id. ; id. |
| | 3 | 217 | 55·0 | 47·3 | 7·7 | 0·0 | 0·0 | | | 1·0 | Linear cirri and cirrous haze. |
| | 4 | 195 | 55·6 | 48·0 | 7·6 | 0·0 | 0·0 | 8 | — : — : 28 | 1·0 | Cirri and cirrous haze ; cirro-strati and haze to E. |
| | 5 | 182 | 56·2 | 48·2 | 8·0 | 0·0 | 0·0 | 8 | | 0·2 | Id. |
| | 6 | 166 | 56·2 | 49·0 | 7·2 | 0·0 | 0·0 | 8 | | 0·2 | Streaks of cirri. |
| | 7 | 162 | 55·3 | 48·3 | 7·0 | 0·0 | 0·0 | 4 | | 0·5 | Patches of cirro-strati and cirri ; hazy on horizon. |
| | 8 | 159 | 52·7 | 47·0 | 5·7 | 0·0 | 0·0 | 4 | | 0·7 | Id. ; cirro-strati. |
| | 9 | 163 | 48·7 | 44·7 | 4·0 | 0·0 | 0·0 | 4 | — : 29 : — | 2·5 | Loose cir.-str., cir.-cum.-str. ; a tendency to cymoid cirri. |
| | 10 | 157 | 45·9 | 42·8 | 3·1 | 0·0 | 0·0 | 2 | 22 : 28 : — | 2·0 | Scud ; cirro-cumuli. |
| | 11 | 148 | 42·2 | 40·4 | 1·8 | 0·0 | 0·0 | | | 0·5 | Cirrous haze on horizon. |
| | 12 | 134 | 37·2 | 36·8 | 0·4 | 0·0 | 0·0 | | | 0·2 | Clear ; cirrous haze on horizon. |

The direction of the wind is indicated by the number of the point of the compass, reckoning N. = 0, E. = 8, S. = 16, W. = 24. The motions of the three strata of clouds, Sc. (scud), C.-s. (cirro-stratus), and Cir. (cirrus), are indicated in a similar manner.

May 13d 20h. At 20h 0m the lowest current of scud was just distinguishable to E. ; at 20h 12m it covered the whole sky, the wind changing at the same time from NW by N. to NE by N. At 20h 18m the dry thermometer read 50°·0, and the wet 48°·3 ; at 20h 30m, barometer, 30·163.

| Gött. Mean Time. | Barometer at 32°. | Thermometers. Dry. | Wet. | Diff. | Wind. Maximum force in 1h. | 10m. | From | Clouds, Sc. : C.-s. : Ci., moving from | Sky clouded. | Species of Clouds and Meteorological Remarks. |
|---|---|---|---|---|---|---|---|---|---|---|
| d. h. | in. | ° | ° | ° | lbs. | lbs. | pt. | pt. pt. pt. | 0—10. | |
| 15 13 | 30·119 | 36·3 | 36·1 | 0·2 | 0·0 | 0·0 | | | 0·0 | Clear; cirrous haze on horizon. |
| 14 | 106 | 35·7 | 35·6 | 0·1 | 0·0 | 0·0 | | | 0·2 | Id.; cirro-strati on N. and NE. horizon. |
| 15 | 085 | 34·7 | 34·5 | 0·2 | 0·0 | 0·0 | | | 0·2 | Id.; id. |
| 16 | 065 | 36·6 | 36·5 | 0·1 | 0·0 | 0·0 | | | 0·5 | Cirro-strati and cirrous haze to E.; much hoar-frost. |
| 17 | 044 | 37·0 | 36·7 | 0·3 | 0·0 | 0·0 | | — : 22 : 22 | 3·0 | Cir.-cum., cirro-strati, and cirri; cirrous haze on hor. |
| 18 | 031 | 38·6 | 38·0 | 0·6 | 0·0 | 0·0 | | — : 21 : — | 7·0 | Id.; id. |
| 19 | 30·004 | 41·3 | 40·6 | 0·7 | 0·0 | 0·0 | 18 | — : — : 19 | 6·5 | Cirri lying SSW. to NNE., moving slowly; cir.-cum. |
| 20 | 29·991 | 43·8 | 42·7 | 1·1 | 0·0 | 0·0 | | | 5·0 | Feathery and tufted cirri lying in belts. |
| 21 | 962 | 51·0 | 47·4 | 3·6 | 0·0 | 0·0 | 28 | — : — : 20 | 7·0 | Cirri lying S by W. to N by E.; patches of scud. |
| 22 | 941 | 53·9 | 48·7 | 5·2 | 0·0 | 0·0 | 24 | 22 : — : 18 | 8·0 | Scud; crossed and woolly cirri; cumuli on SW. hor. |
| 23 | 912 | 55·5 | 49·2 | 6·3 | 0·0 | 0·0 | 20 | — : — : 18 | 8·0 | Cirri lying N. and S.; loose cumuli on SE. horizon. |
| 16 0 | 894 | 57·8 | 49·2 | 8·6 | 0·0 | 0·0 | 28 | — : — : 16 | 8·0 | Id.; cumuli to S.; haze on E. hor. |
| 1 | 866 | 59·0 | 49·0 | 10·0 | 0·0 | 0·0 | 28 | | 8·0 | Cirri, cirro-strati, cirro-cumuli, cumuli. |
| 2 | 845 | 61·0 | 51·0 | 10·0 | 0·0 | 0·0 | 24 v. | 30 : 30 : 18 | 2·7 | Scud, cir.-str.; mottled and branched cirri; cir. haze. |
| 3 | 825 | 60·9 | 50·9 | 10·0 | 0·0 | 0·0 | 30 | | 3·0 | As before. |
| 4 | 812 | 60·3 | 50·2 | 10·1 | 0·2 | 0·4 | 28 | 26 : — : 18 | 6·0 | Patches of cumuli; woolly cirri. |
| 5 | 795 | 61·1 | 50·1 | 11·0 | 0·1 | 0·0 | 28 | — : 29 : 18 | 6·0 | Cirro-cumulous scud; cirri. |
| 6 | 786 | 59·0 | 50·9 | 8·1 | 0·0 | 0·0 | | 29 : — : — | 6·0 | Scud; cirro-cumuli; cirro-strati. |
| 7 | 782 | 54·7 | 49·6 | 5·1 | 0·1 | 0·1 | 4 | — : 28 : — | 4·0 | Cirro-cumulous scud. |
| 8 | 777 | 53·1 | 48·0 | 5·1 | 0·0 | 0·0 | 4 | — : 28 : — | 9·5 | Id. |
| 9 | 772 | 52·0 | 48·0 | 4·0 | 0·0 | 0·0 | | 28 : — : — | 10·0 | Thick watery scud; clouds red to NW. |
| 10 | 773 | 51·7 | 47·9 | 3·8 | 0·0 | 0·0 | | 28 : — : — | 10·0 | Scud; drops of light rain. |
| 11 | 754 | 50·3 | 47·0 | 3·3 | 0·0 | 0·0 | | | 9·9 | Id. |
| 12 | 748 | 50·9 | 47·2 | 3·7 | 0·0 | 0·0 | | | 8·0 | Id. |
| 13 | 29·737 | 49·6 | 46·2 | 3·4 | 0·0 | 0·0 | | | 9·0 | Scud. |
| 14 | 736 | 50·5 | 46·1 | 4·4 | 0·0 | 1·9 | 3 | | 10·0 | Id. |
| 15 | 766 | 42·0 | 40·5 | 1·5 | 1·7 | 0·2 | 2 | | 10·0 | Rain[1] since 14h 30m. |
| 16 | 791 | 41·2 | 39·8 | 1·4 | 0·4 | 0·1 | 1 | 3 : — : — | 10·0 | Scud. |
| 17 | 822 | 40·0 | 37·5 | 2·5 | 2·0 | 1·3 | 2 | 0 : — : — | 9·9 | Id.; cumuli, cirro-strati; rain[2]; showers[3] since 16h. |
| 18 | 839 | 40·6 | 36·9 | 3·7 | 2·4 | 1·2 | 0 | 0 : — : — | 10·0 | Id. |
| 19 | 855 | 41·2 | 37·8 | 3·4 | 1·2 | 0·9 | 0 | 1 : — : — | 9·8 | Id.; cirro-strati to E. |
| 20 | 871 | 40·3 | 38·2 | 2·1 | 1·3 | 0·4 | 0 | 0 : — : — | 5·0 | Scud and loose cumuli; light shower of fine hail. |
| 21 | 873 | 43·0 | 37·4 | 5·6 | 2·2 | 2·6 | 0 v. | 0 : — : — | 4·0 | Long ranges of loose cumuli. |
| 22 | 871 | 44·8 | 39·2 | 5·6 | 3·3 | 2·8 | 0 | 0 : — : — | 8·0 | Scud and loose cumuli. |
| 23 | 866 | 45·7 | 39·9 | 5·8 | 2·8 | 2·1 | 0 | 31 : 2 : — | 8·5 | Id.; cir.-cum. scud; showers to E. and N. |
| 17 0 | 873 | 45·6 | 39·2 | 6·4 | 4·0 | 2·4 | 0 | 0 : — : — | 7·0 | Id.; shower of hail at 23h 30m when temp. |
| 1 | 869 | 46·9 | 40·7 | 6·2 | 3·7 | 1·9 | 0 | 0 : — : — | 7·0 | Scud and cumuli; shower[4] at 0h 45m. [fell to 39°. |
| 2 | 859 | 46·3 | 40·0 | 6·3 | 3·3 | 1·9 | 1 | 0 : — : — | 7·0 | Id.; snow on Cheviot. |
| 3 | 857 | 46·6 | 40·3 | 6·3 | 3·1 | 1·6 | 0 | 0 : — : — | 10·0 | Id.; a few hailstones falling. |
| 4 | 853 | 43·6 | 39·7 | 3·9 | 3·1 | 1·5 | 2 | 31 : — : — | 10·0 | Id. |
| 5 | 854 | 40·1 | 37·6 | 2·5 | 1·6 | 1·0 | | 31 : — : — | 9·5 | Id.; shower[5] of hail. |
| 6 | 848 | 41·5 | 38·1 | 3·4 | 2·8 | 1·3 | 31 | 0 : — : — | 9·0 | Scud; rain falling to N. |
| 7 | 850 | 41·7 | 38·3 | 3·4 | 1·8 | 0·3 | 0 | | 2·5 | Id., cumuli and cirro-strati on horizon. |
| 8 | 848 | 40·0 | 35·8 | 4·2 | 2·0 | 0·2 | 0 | 0 : — : — | 6·0 | Id.; cumuli, cumulo-strati; shower to E. |
| 9 | 865 | 38·7 | 35·0 | 3·7 | 1·0 | 0·3 | 31 | 0 : — : — | 2·0 | Id.; showers around. |
| 10 | 864 | 37·8 | 34·9 | 2·9 | 1·1 | 1·1 | 31 | 0 : — : — | 3·0 | Id. |
| 11 | 867 | 36·8 | 34·4 | 2·4 | 1·4 | 0·1 | 31 | 0 : — : — | 6·5 | Id. |
| 12 | 869 | 36·2 | 33·1 | 3·1 | 0·4 | 0·3 | 31 | 31 : — : — | 1·5 | Id. |
| 13 | 29·863 | 34·8 | 32·0 | 2·8 | 0·5 | 0·1 | 30 | | 1·7 | Scud. |
| 14 | 856 | 34·4 | 31·8 | 2·6 | 0·2 | 0·0 | 31 | | 1·7 | Id. |
| 15 | 850 | 33·0 | 31·0 | 2·0 | 0·1 | 0·0 | 31 | | 2·5 | Id. |
| 16 | 847 | 30·9 | 29·4 | 1·5 | 0·0 | 0·0 | | | 1·0 | Id. |
| 17 | 847 | 31·3 | 30·0 | 1·3 | 0·0 | 0·0 | 28 | 2 : — : — | 7·5 | Id.; loose cumuli to N. |
| 18 | 852 | 36·9 | 33·7 | 3·2 | 0·2 | 0·1 | 30 | 2 : — : — | 7·0 | Id.; id. |
| 19 | 859 | 38·8 | 35·0 | 3·8 | 0·3 | 0·2 | 31 | | 9·5 | Id. |
| 20 | 871 | 40·0 | 35·9 | 4·1 | 0·3 | 0·4 | 31 | 2 : — : — | 8·5 | Id.; cumuli on horizon; cirrous clouds. |

The direction of the wind is indicated by the number of the point of the compass, reckoning N. = 0, E. = 8, S. = 16, W. = 24. The motions of the three strata of clouds, Sc. (scud), C.-s. (cirro-stratus), and Cir. (cirrus), are indicated in a similar manner.

May 16d 14h. Gusts of wind commenced at 14h 2m, and rain at 14h 30m.

| Gött. Mean Time. | | Barometer at 32°. | Thermometers. Dry. | Wet. | Diff. | Wind. Maximum force in 1h. | 10m. | From | Clouds, Sc. : C.-s. : Ci., moving from | Sky clouded. | Species of Clouds and Meteorological Remarks. |
|---|---|---|---|---|---|---|---|---|---|---|---|
| d. | h. | in. | ° | ° | ° | lbs. | lbs. | pt. | pt. pt. pt. | 0—10. | |
| 17 | 21 | 29·884 | 43·2 | 38·2 | 5·0 | 0·7 | 0·4 | 0 | 1 : — : — | 9·5 | Scud and loose cumuli ; cirro-strati. |
| | 22 | 887 | 43·1 | 38·3 | 4·8 | 1·1 | 0·6 | 0 | | 9·5 | Id. |
| | 23 | 892 | 46·3 | 41·0 | 5·3 | 1·8 | 0·8 | 1 | | 9·0 | Id. |
| 18 | 0 | 896 | 47·0 | 40·3 | 6·7 | 1·5 | 0·9 | 5 | 1 : — : — | 9·0 | Id. ; shower of hail since 23h. |
| | 1 | 912 | 46·2 | 40·2 | 6·0 | 2·1 | 0·1 | 2 | 1 : 3 : — | 9·7 | Scud and cumuli in two currents. |
| | 2 | 931 | 47·2 | 40·8 | 6·4 | 1·6 | 1·0 | 2 | 1 : — : — | 9·7 | Scud and loose cumuli. |
| | 3 | 938 | 45·5 | 39·9 | 5·6 | 1·4 | 1·1 | 2 | | 9·5 | Id. ; cirrous clouds. |
| | 4 | 944 | 45·0 | 40·0 | 5·0 | 1·6 | 0·8 | 2 | | 6·0 | Id. ; id. |
| | 5 | 947 | 45·0 | 40·0 | 5·0 | 1·3 | 0·4 | 2 | 2 : — : — | 7·0 | Cumuli ; shower[3] since 4h. |
| | 6 | 968 | 45·3 | 39·9 | 5·4 | 0·9 | 0·3 | 2 | 1 : — : — | 6·5 | Scud and cumuli ; a few drops of rain. |
| | 7 | 980 | 45·0 | 39·6 | 5·4 | 0·8 | 0·2 | 2 | 1 : — : — | 1·5 | Id. |
| | 8 | 29·997 | 42·1 | 38·1 | 4·0 | 0·2 | 0·1 | 2 | 0 : — : — | 3·0 | Id. |
| | 9 | 30·018 | 40·0 | 37·3 | 2·7 | 0·0 | 0·0 | 1 | 0 : — : — | 1·5 | Cirro-cumulous scud ; sky hazy to E. |
| | 10 | 040 | 37·2 | 35·7 | 1·5 | 0·0 | 0·0 | 0 | | 1·0 | Scud on horizon. |
| | 11 | 045 | 37·0 | 35·7 | 1·3 | 0·0 | 0·0 | | | 3·0 | Scud. |
| | 12 | 047 | 38·2 | 36·7 | 1·5 | 0·0 | 0·0 | | | 3·5 | Id. ; at 12h 10m rain[1] |
| 19 | 0 | 30·053 | ... | ... | ... | 1·8 | ... | 2 | | | |
| | 13 | 30·042 | 42·3 | 38·0 | 4·3 | 1·8 | 0·1 | 2 | | 10·0 | Scud. |
| | 14 | 30·024 | 42·7 | 37·8 | 4·9 | 0·5 | 0·2 | 2 | | 10·0 | Id. |
| | 15 | 30·015 | 42·5 | 38·0 | 4·5 | 0·6 | 0·1 | 2 | | 10·0 | Id. |
| | 16 | 29·999 | 42·5 | 38·0 | 4·5 | 0·6 | 0·1 | 2 | 2 : — : — | 10·0 | Id. |
| | 17 | 29·998 | 42·8 | 38·4 | 4·4 | 0·9 | 0·4 | 2 | 2 : — : — | 10·0 | Id. ; cirro-strati on E. horizon. |
| | 18 | 29·994 | 43·2 | 38·4 | 4·8 | 1·1 | 0·8 | 1 | 2 : — : — | 10·0 | Id. |
| | 19 | 30·008 | 44·0 | 39·5 | 4·5 | 1·0 | 0·5 | 2 | 2 : — : — | 9·9 | Id. |
| | 20 | 30·018 | 45·3 | 40·2 | 5·1 | 1·2 | 0·5 | 2 | 2 : — : — | 9·9 | Id. |
| | 21 | 30·009 | 46·0 | 40·7 | 5·3 | 1·3 | 0·6 | 2 | 2 : — : — | 9·0 | Id. |
| | 22 | 30·003 | 46·4 | 40·7 | 5·7 | 1·4 | 0·5 | 1 | 2 : — : — | 6·0 | Scud and loose cumuli. |
| | 23 | 29·990 | 48·0 | 42·2 | 5·8 | 1·0 | 0·6 | 2 | 2 : — : — | 7·0 | Id. |
| 20 | 0 | 990 | 50·6 | 44·0 | 6·6 | 1·1 | 0·2 | 2 | 2 : — : — | 3·0 | Id. |
| | 1 | 978 | 49·8 | 43·3 | 6·5 | 0·7 | 0·4 | 3 | 1 : — : — | 1·7 | Id. |
| | 2 | 966 | 51·6 | 45·0 | 6·6 | 0·9 | 0·6 | 3 | 0 : — : — | 1·0 | Id. |
| | 3 | 970 | 51·1 | 44·9 | 6·2 | 1·2 | 0·9 | 3 | 0 : — : — | 1·5 | Id. ; cirri to NW. |
| | 4 | 960 | 52·0 | 45·3 | 6·7 | 1·3 | 1·1 | 3 | | 0·5 | Patches of scud and cum. to S. ; cir.-str. and cir. haze. |
| | 5 | 966 | 50·7 | 44·7 | 6·0 | 1·5 | 1·2 | 2 | | 0·7 | Id. ; cirri and cirro-strati. |
| | 6 | 953 | 50·2 | 44·8 | 5·4 | 2·2 | 0·3 | 2 | | 1·5 | Cirri and patches of scud. |
| | 7 | 966 | 48·7 | 43·2 | 5·5 | 1·1 | 0·7 | 2 | | 1·5 | Cirri ; range of cumuli on S. and E. horizon. |
| | 8 | 968 | 47·9 | 43·1 | 4·8 | 0·8 | 0·4 | 3 | — : — : 1 | 8·0 | Thick woolly cirri, cir.-cum. on the edges ; grey scud. |
| | 9 | 968 | 46·5 | 42·2 | 4·3 | 1·4 | 0·6 | 1 | 2 : — : — | 9·0 | Thick semifluid cirro-stratous scud ; cirro-strati ; cirri. |
| | 10 | 959 | 46·5 | 42·2 | 4·3 | 0·5 | 0·8 | 0 | — : 3 : — | 9·2 | Cirro-stratous scud ; cirro-strati to E. |
| | 11 | 956 | 45·8 | 41·7 | 4·1 | 1·2 | 1·1 | 2 | | 8·0 | Id. ; cirri. |
| | 12 | 951 | 43·9 | 41·1 | 2·8 | 1·6 | 0·9 | 0 | | 8·5 | Scud and cirrous clouds. |
| | 13 | 29·965 | 44·3 | 41·7 | 2·6 | 1·3 | 0·8 | 3 | | 9·7 | Scud and cirrous clouds ; shower[2] |
| | 14 | 963 | 44·0 | 42·1 | 1·9 | 1·1 | 0·9 | 2 | | 10·0 | Scud ; showers[2] |
| | 15 | 971 | 44·0 | 42·8 | 1·2 | 1·5 | 0·8 | 2 | | 10·0 | Rain[1—1] |
| | 16 | 964 | 43·9 | 42·9 | 1·0 | 1·0 | 0·8 | 2 | | 10·0 | Rain[1—2] |
| | 17 | 957 | 45·7 | 44·0 | 1·7 | 0·7 | 1·2 | 3 | 5 : — : — | 10·0 | Scud. |
| | 18 | 990 | 45·6 | 43·6 | 2·0 | 2·0 | 1·7 | 3 | 5 : — : — | 10·0 | Id. |
| | 19 | 29·987 | 46·4 | 43·9 | 2·5 | 2·2 | 1·1 | 2 | | 10·0 | Id. ; scud on Cheviot. |
| | 20 | 30·012 | 46·8 | 44·2 | 2·6 | 2·2 | 2·1 | 3 | | 10·0 | Id. |
| | 21 | 030 | 48·7 | 45·7 | 3·0 | 2·1 | 2·0 | 3 | 5 : — : — | 10·0 | Thick semifluid scud ; loose scud to E. and S. |
| | 22 | 033 | 49·2 | 46·2 | 3·0 | 2·5 | 2·0 | 3 | | 10·0 | Id. |
| | 23 | 050 | 49·9 | 46·8 | 3·1 | 2·8 | 2·3 | 3 | | 10·0 | Id. ; shower to E. |
| 21 | 0 | 053 | 51·8 | 47·3 | 4·5 | 2·6 | 1·8 | 1 | | 10·0 | Very thick homogeneous scud ; scud on Cheviot. |
| | 1 | 080 | 51·4 | 46·8 | 4·6 | 1·9 | 2·0 | 2 | | 9·9 | Thick semifluid cirro-stratous scud ; loose scud below. |
| | 2 | 073 | 51·3 | 46·8 | 4·5 | 2·6 | 1·8 | 5 | — : 5 : — | 9·9 | Cirro-cumuli ; loose scud and cirro-strati to S. |

The direction of the wind is indicated by the number of the point of the compass, reckoning N. = 0, E. = 8, S. = 16, W. = 24. The motions of the three strata of clouds, Sc. (scud), C.-s. (cirro-stratus), and Cir. (cirrus), are indicated in a similar manner.

| Gött. Mean Time. | | Barometer at 32°. | Thermometers. Dry. | Wet. | Diff. | Wind. Maximum force in 1h. | 10m. | From | Clouds, Sc. : C.-s. : Ci., moving from | Sky clouded. | Species of Clouds and Meteorological Remarks. |
|---|---|---|---|---|---|---|---|---|---|---|---|
| d. | h. | in. | ° | ° | ° | lbs. | lbs. | pt. | pt. pt. pt. | 0—10. | |
| 21 | 3 | 30·088 | 53·2 | 47·8 | 5·4 | 1·6 | 1·7 | 5 | | 9·5 | Cirro-cumuli; loose scud and cirro-strati to E. |
| | 4 | 067 | 54·0 | 48·6 | 5·4 | 1·8 | 1·2 | 5 | —: 5:— | 6·0 | Id. |
| | 5 | 061 | 55·3 | 49·0 | 6·3 | 2·5 | 1·7 | 5 | | 3·0 | Cirro-strati, cirro-cumuli; cumuli, cumulo-strati. |
| | 6 | 082 | 52·8 | 47·7 | 5·1 | 3·0 | 1·5 | 4 | —: 4:— | 8·0 | Cirri, cirro-cumuli, cirro-strati; solar halo.* |
| | 7 | 087 | 51·5 | 46·4 | 5·1 | 1·8 | 0·8 | 3 | | 9·0 | As before. |
| | 8 | 111 | 50·2 | 45·5 | 4·7 | 1·5 | 0·2 | 2 | | 9·0 | Cirri thicker; cirro-cumuli looser; no halo. |
| | 9 | 124 | 47·8 | 44·0 | 3·8 | 0·2 | 0·1 | 2 | | 9·5 | Cirri, cir.-str., and cir.-cum.; cirri red to NW. at 9½h. |
| | 10 | 135 | 46·3 | 43·3 | 3·0 | 0·0 | 0·0 | 2 | | 2·5 | Id., cirrous haze; scud. |
| | 11 | 146 | 42·1 | 40·9 | 1·2 | 0·0 | 0·0 | | | 2·0 | Cirro-strati and cirri near horizon; lunar corona. |
| | 12 | 158 | 41·7 | 40·3 | 1·4 | 0·0 | 0·0 | | | 2·0 | Cirro-strati and cirri. |
| | 13 | 30·166 | 38·2 | 37·6 | 0·6 | 0·0 | 0·0 | | | 1·0 | Cirro-strati and cirri. |
| | 14 | 155 | 39·7 | 37·9 | 1·8 | 0·0 | 0·0 | | | 0·5 | Id. |
| | 15 | 149 | 36·6 | 36·0 | 0·6 | 0·0 | 0·0 | | | 0·5 | Id. |
| | 16 | 151 | 39·1 | 38·1 | 1·0 | 0·0 | 0·0 | | | 0·5 | Cirro-strati. |
| | 17 | 146 | 41·3 | 40·2 | 1·1 | 0·0 | 0·0 | | | 0·5 | Cirro-strati to S. and SW.; cumulo-strati to SE. |
| | 18 | 157 | 40·9 | 40·4 | 0·5 | 0·0 | 0·0 | | | 0·2 | Id.; id. |
| | 19 | 163 | 47·7 | 44·8 | 2·9 | 0·2 | 0·2 | 2 | | 0·5 | Scud on horizon to SE. and NE.; cirro-strati. |
| | 20 | 157 | 51·2 | 48·1 | 3·1 | 0·3 | 0·2 | 3 | 4:—:— | 3·0 | Scud; cirro-strati to S. |
| | 21 | 151 | 49·9 | 48·5 | 1·4 | 0·1 | 0·1 | 4 | | 10·0 | Id. |
| | 22 | 172 | 51·8 | 50·0 | 1·8 | 0·0 | 0·0 | 4 | | 9·9 | Id.; two small breaks showing green sky. |
| | 23 | 168 | 51·2 | 48·3 | 2·9 | 0·2 | 0·1 | 7 | | 10·0 | Id. |
| 22 | 0 | 170 | 49·6 | 47·4 | 2·2 | 0·1 | 0·1 | 4 | | 10·0 | Id., nearly homogeneous. |
| | 1 | 166 | 50·5 | 48·2 | 2·3 | 0·0 | 0·0 | 4 | | 10·0 | Id. |
| | 2 | 154 | 52·7 | 48·4 | 4·3 | 0·0 | 0·0 | 4 | | 9·7 | Id.; breaking to N. |
| | 3 | 145 | 53·2 | 49·3 | 3·9 | 0·0 | 0·0 | 4 | | 0·5 | Id. |
| | 4 | 140 | 55·3 | 49·3 | 6·0 | 0·1 | 0·0 | 4 | | 0·2 | Id. on E. horizon. |
| | 5 | 135 | 53·8 | 49·3 | 4·5 | 0·2 | 0·1 | 4 | | 0·2 | Id. |
| | 6 | 132 | 51·4 | 46·9 | 4·5 | 0·2 | 0·2 | 5 | | 0·0 | Haze to E. |
| | 7 | 136 | 51·4 | 47·0 | 4·4 | 0·1 | 0·1 | 6 | | 0·0 | Id. |
| | 8 | 144 | 49·5 | 45·7 | 3·8 | 0·0 | 0·0 | 7 | | 0·0 | Id. |
| | 9 | 161 | 44·8 | 43·0 | 1·8 | 0·0 | 0·0 | | | 0·0 | Id. |
| | 10 | 165 | 42·4 | 41·4 | 1·0 | 0·0 | 0·0 | | | 0·0 | Id. |
| | 11 | 157 | 39·8 | 38·8 | 1·0 | 0·0 | 0·0 | | | 0·2 | Haze to NE. |
| | 12 | 150 | 38·0 | 37·5 | 0·5 | 0·0 | 0·0 | | | 0·1 | Clouds to NE. |
| | 13 | 30·134 | 37·9 | 37·2 | 0·7 | 0·0 | 0·0 | | | 0·1 | Clouds to NE. |
| | 14 | 136 | 34·6 | 34·2 | 0·4 | 0·0 | 0·0 | | | 0·1 | Id. |
| | 15 | 139 | 34·0 | 33·8 | 0·2 | 0·0 | 0·0 | | | 0·1 | Id. |
| | 16 | 135 | 34·0 | 33·8 | 0·2 | 0·0 | 0·0 | | | 0·1 | Cirri, tinged with yellow to NE. |
| | 17 | 138 | 34·9 | 34·5 | 0·4 | 0·0 | 0·0 | | | 0·2 | Cirri and cirrous haze on E. horizon. |
| | 18 | 133 | 37·9 | 37·2 | 0·7 | 0·0 | 0·0 | | | 0·3 | Id. |
| | 19 | 133 | 42·0 | 40·2 | 1·8 | 0·0 | 0·0 | 16 | | 0·5 | Woolly cirri to N.; scud to NE.; hazy to E. |
| | 20 | 135 | 49·0 | 46·0 | 3·0 | 0·0 | 0·0 | 2 | 4:—:— | 0·6 | As before. |
| | 21 | 139 | 50·3 | 46·7 | 3·6 | 0·0 | 0·0 | 2 | 4:—:— | 0·5 | Scud; woolly cirri; haze on horizon. |
| | 22 | 134 | 52·2 | 47·7 | 4·5 | 0·2 | 0·1 | 5 | | 1·0 | Scud to E.; mottled and linear cirri. |
| | 23 | 129 | 52·8 | 48·0 | 4·8 | 0·2 | 0·1 | 6 | | 1·3 | Id.; id. |
| 23 | 0 | 119 | 55·7 | 49·9 | 5·8 | 0·1 | 0·2 | 6 | —:—: 4 | 1·5 | Mottled and woolly cirri; scud on E. horizon. |
| | 1 | 100 | 55·4 | 50·0 | 5·4 | 0·2 | 0·1 | 6 | | 1·5 | Woolly cirri; scud on E. horizon. |
| | 2 | 099 | 54·7 | 49·5 | 5·2 | 0·2 | 0·2 | 3 | | 1·5 | Linear and curled cirri; scud. |
| | 3 | 097 | 55·3 | 50·6 | 4·7 | 0·3 | 0·3 | 4 | 3:—:— | 1·8 | Scud; woolly and diffuse cirri. |
| | 4 | 080 | 53·9 | 50·7 | 3·2 | 0·4 | 0·2 | 6 | 4:—:— | 8·0 | Id.; id. |
| | 5 | 062 | 52·9 | 50·0 | 2·9 | 0·1 | 0·0 | 4 | | 9·7 | Id. |
| | 6 | 055 | 50·5 | 48·2 | 2·3 | 0·1 | 0·0 | 4 | | 10·0 | Id. |
| | 7 | 053 | 49·8 | 47·0 | 2·8 | 0·1 | 0·0 | | 4:—:— | 5·0 | Id.; loose cumuli and cirrous clouds. |
| | 8 | 056 | 48·9 | 46·2 | 2·7 | 0·0 | 0·0 | | | 9·5 | Id.; sky to S. |
| | 9 | 060 | 46·4 | 45·0 | 1·4 | 0·0 | 0·0 | 4 | 4:—:— | 10·0 | Id. |
| | 10 | 060 | 45·7 | 44·4 | 1·3 | 0·1 | 0·0 | 4 | | 10·0 | Id. |

The direction of the wind is indicated by the number of the point of the compass, reckoning N. = 0, E. = 8, S. = 16, W. = 24. The motions of the three strata of clouds, Sc. (scud), C.-s. (cirro-stratus), and Cir. (cirrus), are indicated in a similar manner.

* See additional meteorological notes after the *Hourly Meteorological Observations.*

| Gött. Mean Time. | Barometer at 32°. | Thermometers. Dry. | Wet. | Diff. | Wind. Maximum force in 1h. | 10m. | From | Clouds, Sc. : C.-s. : Ci., moving from | Sky clouded. | Species of Clouds and Meteorological Remarks. |
|---|---|---|---|---|---|---|---|---|---|---|
| d. h. | in. | ° | ° | ° | lbs. | lbs. | pt. | pt. pt. pt. | 0—10. | |
| 23 11 | 30·053 | 45·8 | 44·0 | 1·8 | 0·0 | 0·0 | 4 | | 10·0 | Scud. |
| 12 | 049 | 45·6 | 43·9 | 1·7 | 0·0 | 0·0 | 4 | | 10·0 | Id. |
| 13 | 30·033 | 45·0 | 43·4 | 1·6 | 0·1 | 0·0 | 4 | | 10·0 | Scud. |
| 14 | 021 | 45·2 | 43·2 | 2·0 | 0·0 | 0·0 | 2 | | 10·0 | Id. |
| 15 | 013 | 44·6 | 42·3 | 2·3 | 0·1 | 0·0 | 3 | 3 : — : — | 9·5 | Id. |
| 16 | 009 | 44·3 | 42·2 | 2·1 | 0·1 | 0·1 | 3 | 3 : — : — | 9·8 | Id. |
| 17 | 009 | 44·3 | 42·0 | 2·3 | 0·0 | 0·0 | 1 | 3 : — : — | 10·0 | Id. |
| 18 | 013 | 44·5 | 42·1 | 2·4 | 0·0 | 0·0 | 2 | 3 : — : — | 10·0 | Id. |
| 19 | 003 | 45·2 | 43·0 | 2·2 | 0·0 | 0·0 | 1 | 3 : — : — | 10·0 | Id. |
| 20 | 30·003 | 47·2 | 44·2 | 3·0 | 0·1 | 0·0 | 1 | 3 : — : — | 10·0 | Id. |
| 21 | 29·995 | 48·0 | 45·0 | 3·0 | 0·1 | 0·1 | 2 | 3 : — : — | 10·0 | Id. |
| 22 | 30·002 | 49·9 | 45·5 | 4·4 | 0·1 | 0·0 | 1 | 2 : — : — | 9·9 | Id.; sky in zenith. |
| 23 | 30·002 | 49·4 | 45·2 | 4·2 | 0·1 | 0·2 | 5 | 2 : — : — | 8·0 | Thin scud; linear cirri to W. |
| 24 0 | 29·989 | 50·4 | 45·9 | 4·5 | 0·3 | 0·2 | 2 | | 3·0 | Linear cirri; scud on horizon; clear in zenith. |
| 1 | 973 | 52·2 | 47·1 | 5·1 | 0·3 | 0·1 | 6 | | 0·7 | Woolly cirri; scud on S. and E. horizon. |
| 2 | 964 | 54·7 | 47·9 | 6·8 | 0·2 | 0·1 | 3 | | 1·0 | Id.; scud and cirrous haze on E. horizon. |
| 3 | 950 | 56·1 | 49·1 | 7·0 | 0·2 | 0·1 | 6 | | 0·5 | Cirri and cirro-strati; haze on E. horizon. |
| 4 | 935 | 57·8 | 50·2 | 7·6 | 0·2 | 0·1 | 3 | | 1·0 | Cirro-strati on S. hor.; woolly cirri; haze on E. hor. |
| 5 | 934 | 56·9 | 49·6 | 7·3 | 0·5 | 0·2 | 6 | | 0·5 | As before. |
| 6 | 936 | 54·1 | 47·9 | 6·2 | 0·2 | 0·2 | 4 | | 0·2 | Cirri and cirro-strati to S. |
| 7 | 932 | 51·8 | 47·3 | 4·5 | 0·1 | 0·0 | 5 | | 0·5 | Mottled and woolly cirri and cirro-strati; hazy to E. |
| 8 | 946 | 49·4 | 45·7 | 3·7 | 0·0 | 0·0 | 4 | — : — : 28 | 0·5 | Id.; id. |
| 9 | 959 | 45·5 | 43·7 | 1·8 | 0·0 | 0·0 | 5 | 4 : — : — | 2·5 | Scud; patches of cirri. |
| 10 | 972 | 45·9 | 44·0 | 1·9 | 0·0 | 0·0 | 4 | | 10·0 | Id. |
| 11 | 976 | 45·6 | 44·0 | 1·6 | 0·0 | 0·0 | 4 | | 10·0 | Id. |
| 12 | 976 | 45·6 | 44·8 | 0·8 | 0·0 | 0·2 | 3 | | 10·0 | Id.; the wind commenced to blow at 13h 5m. |
| 13 | 29·976 | 44·5 | 44·5 | ... | 0·4 | 0·0 | 2 | | 10·0 | Rain[1] |
| 14 | 978 | 45·0 | 44·6 | 0·4 | 0·2 | 0·1 | 4 | | 10·0 | Scud. |
| 15 | 975 | 45·3 | 44·8 | 0·5 | 0·0 | 0·0 | 2 | | 10·0 | Id. |
| 16 | 971 | 45·9 | 45·0 | 0·9 | 0·0 | 0·0 | | | 10·0 | Rain[0·5] |
| 17 | 969 | 46·2 | 45·4 | 0·8 | 0·1 | 0·0 | 2 | | 10·0 | Scud. |
| 18 | 983 | 47·0 | 45·0 | 2·0 | 0·1 | 0·1 | 2 | 4 : — : — | 10·0 | Id. |
| 19 | 989 | 48·6 | 45·0 | 3·6 | 0·4 | 0·2 | 4 | 4 : — : — | 9·8 | Id. |
| 20 | 29·994 | 49·8 | 45·3 | 4·5 | 0·3 | 0·1 | 3 | 4 : — : — | 9·9 | Id. |
| 21 | 30·002 | 51·6 | 46·2 | 5·4 | 0·3 | 0·3 | 2 | 4 : — : — | 7·0 | Scud and loose cumuli. |
| 22 | 29·997 | 51·6 | 45·7 | 5·9 | 0·3 | 0·3 | 2 | 4 : — : — | 2·0 | Id. |
| 23 | 30·000 | 53·3 | 46·3 | 7·0 | 0·2 | 0·3 | 2 | | 0·1 | Very light cirri to S. and E. |
| 25 0 | 30·005 | 54·1 | 45·0 | 9·1 | 0·4 | 0·5 | 2 | | 0·2 | Cirri and cirrous haze to S. and E. |
| 1 | 30·007 | 54·9 | 44·0 | 10·9 | 0·5 | 0·7 | 2 | | 1·0 | Id. |
| 2 | 29·999 | 56·8 | 46·1 | 10·7 | 0·6 | 0·5 | 2 | 2 : — : — | 1·0 | Patches of scud; cirri and cirrous haze. |
| 3 | 29·994 | 56·3 | 46·7 | 9·6 | 0·6 | 0·4 | 2 | | 0·8 | As before; wind in gusts. |
| 4 | 29·999 | 55·8 | 46·6 | 9·2 | 0·3 | 0·5 | 2 | | 1·0 | Id. |
| 5 | 30·014 | 53·0 | 46·6 | 6·4 | 0·9 | 0·5 | 1 | 2 : — : — | 0·7 | Scud and loose cumuli. |
| 6 | 032 | 50·2 | 44·7 | 5·5 | 0·8 | 1·0 | 4 | 2 : — : — | 5·0 | Id. |
| 7 | 042 | 47·5 | 42·5 | 5·0 | 0·7 | 0·4 | 3 | | 7·0 | Id. |
| 8 | 061 | 46·0 | 41·3 | 4·7 | 0·8 | 0·3 | 3 | | 2·0 | Id. |
| 9 | 077 | 45·2 | 41·3 | 3·9 | 0·9 | 0·4 | 2 | 2 : — : — | 2·0 | Scud; cirrous haze. |
| 10 | 088 | 42·1 | 38·8 | 3·3 | 0·5 | 0·0 | 0 | 2 : — : — | 7·0 | Id. |
| 11 | 094 | 43·9 | 39·1 | 4·8 | 0·1 | 0·0 | 0 | | 9·7 | Id. |
| 12 | 103 | 44·6 | 39·7 | 4·9 | 0·4 | 0·2 | 2 | | 9·8 | Id. |
| 23½ | 30·153 | ... | ... | ... | 2·4 | ... | 2 | | | |
| 26 13 | 30·161 | 40·2 | 38·9 | 1·3 | 3·1 | 0·0 | 28 | 2 : — : — | 5·0 | Cirro-cumulous scud. |
| 14 | 156 | 44·0 | 41·4 | 2·6 | 0·0 | 0·0 | 0 | | 8·0 | Id. |
| 15 | 150 | 45·0 | 41·8 | 3·2 | 0·1 | 0·0 | 0 | | 10·0 | Id. |
| 16 | 147 | 46·0 | 42·4 | 3·6 | 0·3 | 0·1 | 2 | 2 : — : — | 9·8 | Scud; linear cirri. |

The direction of the wind is indicated by the number of the point of the compass, reckoning N. = 0, E. = 8, S. = 16, W. = 24. The motions of the three strata of clouds, Sc. (scud), C.-s. (cirro-stratus), and Cir. (cirrus), are indicated in a similar manner.

| Gött. Mean Time. | | Barometer at 32°. | Thermometers. | | | Wind. | | | Clouds, Sc. : C.-s. : Ci., moving from | Sky clouded. | Species of Clouds and Meteorological Remarks. |
|---|---|---|---|---|---|---|---|---|---|---|---|
| | | | Dry. | Wet. | Diff. | Maximum force in 1h. | Maximum force in 10m. | From | | | |
| d. | h. | in. | | ° | ° | lbs. | lbs. | pt. | pt. pt. pt. | 0—10. | |
| 26 | 17 | 30·147 | 45·7 | 42·5 | 3·2 | 0·5 | 0·0 | 31 | 2 : — : — | 9·0 | Scud ; linear cirri ; sky to NW. |
| | 18 | 152 | 45·0 | 42·1 | 2·9 | 0·0 | 0·0 | 1 | 2 : — : — | 2·0 | Id. ; mottled cirri. |
| | 19 | 146 | 45·6 | 44·0 | 1·6 | 0·4 | 0·3 | 3 | | 2·0 | Scud and loose cumuli ; dense mass of scud to E. |
| | 20 | 162 | 48·2 | 44·2 | 4·0 | 1·0 | 0·3 | 2 | 2 : — : — | 9·0 | Scud ; loose cumuli to NW. ; sky to W. |
| | 21 | 159 | 50·3 | 45·9 | 4·4 | 0·9 | 0·7 | 3 | 2 : — : — | 9·0 | Scud and loose cumuli. |
| | 22 | 164 | 51·0 | 47·0 | 4·0 | 1·4 | 0·3 | 3 | 2 : — : — | 9·9 | Id. |
| | 23 | 165 | 51·9 | 47·9 | 4·0 | 0·9 | 0·3 | 4 | 2 : — : — | 9·5 | Id. |
| 27 | 0 | 158 | 50·2 | 47·8 | 2·4 | 0·7 | 0·9 | 5 | 2 : — : — | 8·5 | Id. |
| | 1 | 163 | 51·7 | 47·0 | 4·7 | 0·6 | 0·3 | 5 | | 9·0 | Id. |
| | 2 | 150 | 51·2 | 46·2 | 5·0 | 0·8 | 0·5 | 2 | | 1·0 | Id. |
| | 3 | 139 | 51·3 | 45·9 | 5·4 | 0·9 | 0·8 | 4 | | 0·5 | Id. |
| | 4 | 134 | 50·9 | 45·2 | 5·7 | 0·8 | 0·5 | 4 | | 0·5 | Id. |
| | 5 | 130 | 50·1 | 45·2 | 4·9 | 0·8 | 0·3 | 4 | | 0·5 | Patches of loose cumuli to E. ; cirro-strati to NW. |
| | 6 | 124 | 48·1 | 44·2 | 3·9 | 0·4 | 0·3 | 6 | 3 : — : — | 0·7 | Scud ; cirrous haze and linear cirri to NW. |
| | 7 | 132 | 46·9 | 43·4 | 3·5 | 0·6 | 0·2 | 6 | 3 : — : — | 1·0 | Id. ; linear cirri radiating from NNE. |
| | 8 | 135 | 45·0 | 42·2 | 2·8 | 0·2 | 0·1 | 2 | | 1·0 | Id. ; id. |
| | 9 | 143 | 43·2 | 41·2 | 2·0 | 0·0 | 0·0 | 3 | 2 : — : — | 1·8 | Scud, cumuli ; mottled and woolly cirri. |
| | 10 | 143 | 41·0 | 39·8 | 1·2 | 0·0 | 0·0 | 2 | 3 : — : — | 8·5 | Cirro-cumulous scud ; woolly cirro-cumuli. |
| | 11 | 138 | 40·6 | 39·4 | 1·2 | 0·0 | 0·0 | | | 7·0 | Id. ; cirrous haze. |
| | 12 | 128 | 39·9 | 38·9 | 1·0 | 0·0 | 0·0 | | | 7·0 | Cirro-cumuli, cirro-cumulous scud ; cirrous haze, cirri. |
| | 13 | 30·124 | 38·6 | 38·0 | 0·6 | 0·0 | 0·0 | | | 9·5 | Principally cirro-cumuli. |
| | 14 | 107 | 38·2 | 37·9 | 0·3 | 0·0 | 0·0 | | | 9·7 | Id. |
| | 15 | 092 | 39·3 | 38·7 | 0·6 | 0·0 | 0·0 | | | 9·5 | Id. [red to NE. |
| | 16 | 081 | 39·7 | 39·2 | 0·5 | 0·0 | 0·0 | | — : 3 : — | 9·5 | Large cir.-cum. ; woolly and linear cirri to E. ; clouds |
| | 17 | 079 | 39·1 | 38·7 | 0·4 | 0·0 | 0·0 | | 3 : — : — | 9·7 | Loose scud ; cirro-cumuli and cirri. |
| | 18 | 071 | 41·0 | 40·1 | 0·9 | 0·0 | 0·0 | | 3 : — : — | 9·8 | Scud ; cirrous clouds. |
| | 19 | 064 | 44·8 | 43·1 | 1·7 | 0·0 | 0·0 | | | 10·0 | Id. ; id. |
| | 20 | 058 | 45·5 | 43·8 | 1·7 | 0·0 | 0·0 | 0 | 3 : — : — | 10·0 | Id. |
| | 21 | 046 | 47·9 | 45·0 | 2·9 | 0·0 | 0·0 | 2 | | 10·0 | Id. |
| | 22 | 037 | 49·9 | 46·0 | 3·9 | 0·0 | 0·0 | 2 | 2 : — : — | 10·0 | Id. |
| | 23 | 026 | 51·3 | 46·0 | 5·3 | 0·0 | 0·1 | 4 | | 10·0 | Id. |
| 28 | 0 | 027 | 49·5 | 46·0 | 3·5 | 0·1 | 0·1 | 2 | 4 : — : — | 10·0 | Id. |
| | 1 | 30·018 | 50·4 | 46·3 | 4·1 | 0·1 | 0·1 | 3 | 4 : — : — | 10·0 | Id. |
| | 2 | 29·996 | 49·8 | 46·2 | 3·6 | 0·1 | 0·0 | 6 | 4 : — : — | 10·0 | Id. |
| | 3 | 990 | 49·2 | 46·8 | 2·4 | 0·0 | 0·0 | 6 | 4 : — : — | 10·0 | Id. |
| | 4 | 976 | 50·6 | 47·5 | 3·1 | 0·0 | 0·0 | | 4 : — : — | 10·0 | Id. |
| | 5 | 959 | 51·5 | 47·3 | 4·2 | 0·0 | 0·0 | 6 | 2 : — : — | 8·5 | Id. |
| | 6 | 958 | 50·0 | 46·2 | 3·8 | 0·2 | 0·1 | 6 | 2 : — : — | 5·0 | Id. |
| | 7 | 955 | 47·6 | 44·7 | 2·9 | 0·1 | 0·0 | 6 | 3 : — : — | 7·0 | Id. |
| | 8 | 957 | 46·6 | 43·7 | 2·9 | 0·0 | 0·0 | 4 | 3 : — : — | 7·0 | Id. |
| | 9 | 960 | 44·1 | 42·0 | 2·1 | 0·0 | 0·0 | | 4 : — : — | 8·0 | Id. |
| | 10 | 959 | 44·6 | 42·6 | 2·0 | 0·0 | 0·0 | | 4 : — : — | 10·0 | Id. |
| | 11 | 948 | 44·0 | 42·6 | 1·4 | 0·0 | 0·0 | | | 10·0 | Id. |
| | 12 | 948 | 44·2 | 42·8 | 1·4 | 0·0 | 0·0 | | | 10·0 | Id. |
| | 13 | 29·939 | 44·0 | 43·0 | 1·0 | 0·0 | 0·0 | | | 10·0 | Rain0·5 |
| | 14 | 928 | 44·0 | 42·9 | 1·1 | 0·0 | 0·0 | | | 10·0 | Scud. |
| | 15 | 920 | 43·1 | 42·1 | 1·0 | 0·0 | 0·0 | | | 10·0 | Id. |
| | 16 | 913 | 44·0 | 42·0 | 2·0 | 0·0 | 0·0 | 4 | 4 : — : — | 10·0 | Id. |
| | 17 | 925 | 43·8 | 41·0 | 2·8 | 0·0 | 0·0 | | | 10·0 | Id. |
| | 18 | 926 | 44·0 | 41·0 | 3·0 | 0·0 | 0·0 | 2 | | 10·0 | Id. |
| | 19 | 927 | 45·0 | 42·0 | 3·0 | 0·0 | 0·0 | 4 | | 10·0 | Id. |
| | 20 | 933 | 45·8 | 42·8 | 3·0 | 0·0 | 0·0 | | | 10·0 | Id. |
| | 21 | 930 | 46·4 | 43·3 | 3·1 | 0·3 | 0·1 | 4 | | 10·0 | Id. |
| | 22 | 928 | 47·0 | 43·9 | 3·1 | 0·3 | 0·2 | 3 | | 10·0 | Id. |
| | 23 | 926 | 49·1 | 45·1 | 4·0 | 0·3 | 0·1 | 4 | | 10·0 | Id. |
| 29 | 0 | 926 | 49·4 | 45·2 | 4·2 | 0·3 | 0·3 | 4 | 5 : — : — | 10·0 | Id. |

The direction of the wind is indicated by the number of the point of the compass, reckoning N. = 0, E. = 8, S. = 16, W. = 24. The motions of the three strata of clouds, Sc. (scud), C.-s. (cirro-stratus), and Cir. (cirrus), are indicated in a similar manner.

May 28d 4h. Observation made at 4h 7m.

May 28d 19h. Observation made at 19h 13m.

| Gött. Mean Time. | Barometer at 32°. | Thermometers. Dry. | Wet. | Diff. | Wind. Maximum force in 1h. | 10m. | From | Clouds, Sc. : C.-s. : Ci., moving from | Sky clouded. | Species of Clouds and Meteorological Remarks. |
|---|---|---|---|---|---|---|---|---|---|---|
| d. h. | in. | ° | ° | ° | lbs. | lbs. | pt. | pt. pt. pt. | 0—10. | |
| 29 1 | 29·918 | 51·8 | 47·0 | 4·8 | 0·3 | 0·2 | 4 | 5 : — : — | 10·0 | Scud. |
| 2 | 913 | 51·0 | 46·1 | 4·9 | 0·4 | 0·2 | 4 | 4 : — : — | 9·5 | Id. |
| 3 | 909 | 50·7 | 46·1 | 4·6 | 0·3 | 0·3 | 2 | 4 : — : — | 9·8 | Id. |
| 4 | 911 | 50·1 | 46·1 | 4·0 | 0·3 | 0·3 | 2 | 4 : — : — | 10·0 | Id. |
| 5 | 910 | 49·6 | 45·3 | 4·3 | 0·3 | 0·1 | 4 | 4 : — : — | 10·0 | Id. |
| 6 | 905 | 48·2 | 45·0 | 3·2 | 0·4 | 0·1 | 3 | 3 : — : — | 10·0 | Id. |
| 7 | 918 | 47·3 | 43·3 | 4·0 | 0·3 | 0·1 | 4 | | 10·0 | Id. |
| 8 | 910 | 46·5 | 43·0 | 3·5 | 0·2 | 0·2 | 2 | | 10·0 | Id. ; a few drops of rain. |
| 9 | 907 | 46·0 | 44·0 | 2·0 | 0·2 | 0·1 | 3 | 2 : — : — | 10·0 | Id. |
| 10 | 913 | 45·5 | 43·2 | 2·3 | 0·1 | 0·0 | | | 10·0 | Id. |
| 11 | 924 | 45·7 | 43·6 | 2·1 | 0·1 | 0·1 | 2 | | 10·0 | Id. |
| 12 | 919 | 45·3 | 43·3 | 2·0 | 0·5 | 0·3 | 3 | | 10·0 | Id. |
| 13 | 29·915 | 44·5 | 43·1 | 1·4 | 0·5 | 0·8 | 2 | | 10·0 | Scud ; rain[1] |
| 14 | 907 | 44·4 | 43·2 | 1·2 | 0·7 | 0·1 | 2 | | 10·0 | Id. ; rain[0·5] |
| 15 | 900 | 44·0 | 43·0 | 1·0 | 0·1 | 0·0 | 1 | | 10·0 | Id. ; rain[1] |
| 16 | 898 | 44·3 | 43·5 | 0·8 | 0·0 | 0·0 | 1 | 4 : — : — | 10·0 | Id. ; rain[1] |
| 17 | 894 | 44·5 | 44·0 | 0·5 | 0·0 | 0·0 | 2 | 4 : — : — | 10·0 | Id. ; rain[0·5—1] |
| 18 | 901 | 45·4 | 44·8 | 0·6 | 0·0 | 0·0 | 2 | 3 : — : — | 10·0 | Id. |
| 19 | 887 | 47·0 | 45·9 | 1·1 | 0·0 | 0·0 | | 4 : — : — | 10·0 | Id. ; fair. |
| 20 | 893 | 48·4 | 46·9 | 1·5 | 0·1 | 0·1 | 2 | | 10·0 | Id. |
| 21 | 900 | 49·6 | 47·7 | 1·9 | 0·2 | 0·2 | 2 | | 10·0 | Id. ; rain[0·2] |
| 22 | 897 | 50·7 | 48·2 | 2·5 | 0·4 | 0·4 | 2 | 2 : — : — | 10·0 | Id. |
| 23 | 905 | 52·0 | 49·2 | 2·8 | 0·5 | 0·2 | 3 | 2 : — : — | 10·0 | Id. |
| 30 0 | 902 | 51·9 | 48·8 | 3·1 | 0·4 | 0·4 | 2 | 2 : — : — | 10·0 | Id. |
| 1 | 901 | 53·4 | 49·6 | 3·8 | 0·3 | 0·2 | 3 | 2 : — : — | 10·0 | Id. |
| 2 | 903 | 52·5 | 49·3 | 3·2 | 0·5 | 0·5 | 4 | | 10·0 | Id. |
| 3 | 909 | 52·0 | 48·9 | 3·1 | 0·4 | 0·1 | 2 | | 10·0 | Id., approaching to cirro-strati to E. |
| 4 | 908 | 51·2 | 48·1 | 3·1 | 0·5 | 0·0 | 3 | 2 : — : — | 10·0 | Id. |
| 5 | 908 | 50·9 | 47·3 | 3·6 | 0·3 | 0·2 | 2 | 1 : — : — | 10·0 | Id. |
| 6 | 916 | 51·1 | 47·7 | 3·4 | 0·5 | 0·2 | 3 | 2 : — : — | 9·0 | Id. |
| 7 | 920 | 49·2 | 46·0 | 3·2 | 0·3 | 0·1 | 3 | 2 : — : — | 3·5 | Id. ; streaks of linear cirri lying WNW. to ESE. |
| 8 | 931 | 48·5 | 46·0 | 2·5 | 0·1 | 0·0 | 2 | | 8·0 | Id. |
| 9 | 940 | 46·9 | 44·9 | 2·0 | 0·0 | 0·0 | 2 | | 10·0 | Id. |
| 10 | 942 | 46·1 | 44·2 | 1·9 | 0·0 | 0·0 | 2 | | 10·0 | Id. |
| 11 | 938 | 45·7 | 44·0 | 1·7 | 0·0 | 0·0 | | | 10·0 | Id. |
| 12 | 941 | 45·3 | 43·3 | 2·0 | 0·0 | 0·0 | 2 | | 10·0 | Id. |
| 13 | 29·944 | 45·3 | 43·2 | 2·1 | 0·0 | 0·0 | | | 10·0 | Scud. |
| 14 | 946 | 45·1 | 43·5 | 1·6 | 0·0 | 0·0 | | | 10·0 | Id. |
| 15 | 934 | 45·1 | 43·6 | 1·5 | 0·0 | 0·0 | | | 10·0 | Id. |
| 16 | 937 | 44·7 | 42·9 | 1·8 | 0·1 | 0·1 | 3 | | 10·0 | Id. |
| 17 | 946 | 44·5 | 42·9 | 1·6 | 0·1 | 0·0 | | | 10·0 | Id. |
| 18 | 953 | 45·0 | 43·4 | 1·6 | 0·0 | 0·0 | | 4 : — : — | 10·0 | Id. |
| 19 | 964 | 45·4 | 44·7 | 0·7 | 0·0 | 0·0 | 2 | 3 : — : — | 10·0 | Id. ; rain[1] |
| 20 | 962 | 47·0 | 45·2 | 1·8 | 0·2 | 0·2 | 5 | 3 : — : — | 10·0 | Id. ; rain[0·5] |
| 21 | 955 | 47·9 | 46·0 | 1·9 | 0·2 | 0·1 | 3 | 3 : — : — | 10·0 | Id. ; rain[0·5] |
| 22 | 952 | 48·9 | 46·5 | 2·4 | 0·3 | 0·1 | 3 | | 10·0 | Id. ; rain[0·5] |
| 23 | 950 | 49·0 | 47·0 | 2·0 | 0·3 | 0·1 | 3 | | 10·0 | Id. ; rain[0·2] |
| 31 0 | 954 | 51·6 | 48·4 | 3·2 | 0·3 | 0·1 | 5 | 3 : — : — | 10·0 | Id. |
| 1 | 944 | 53·3 | 50·2 | 3·1 | 0·3 | 0·2 | 8 v. | 3 : — : — | 9·9 | Id. |
| 2 | 946 | 53·9 | 50·3 | 3·6 | 0·2 | 0·1 | 8 | 3 : — : — | 10·0 | Id. |
| 3 | 935 | 54·1 | 50·1 | 4·0 | 0·2 | 0·1 | 4 v. | 3 : — : — | 9·8 | Id. |
| 4 | 924 | 52·0 | 49·1 | 2·9 | 0·2 | 0·1 | 4 | | 10·0 | Id. |
| 5 | 920 | 51·6 | 48·8 | 2·8 | 0·1 | 0·1 | 4 | | 10·0 | Id. |
| 6 | 918 | 49·8 | 47·3 | 2·5 | 0·0 | 0·0 | | | 10·0 | Id. |
| 7 | 914 | 49·0 | 47·0 | 2·0 | 0·0 | 0·0 | | | 10·0 | Id. |
| 8 | 918 | 48·0 | 46·0 | 2·0 | 0·0 | 0·0 | | | 10·0 | Id. |

The direction of the wind is indicated by the number of the point of the compass, reckoning N. = 0, E. = 8, S. = 16, W. = 24. The motions of the three strata of clouds, Sc. (scud), C.-s. (cirro-stratus), and Cir. (cirrus), are indicated in a similar manner.

May 31d 0h. The vane having been moving stiffly, it was slightly altered and oiled.

| Gött. Mean Time. | | Barometer at 32°. | Thermometers. Dry. | Wet. | Diff. | Wind. Maximum force in 1h. | 10m. | From | Clouds, Sc. : C.-s. : Ci., moving from | Sky clouded. | Species of Clouds and Meteorological Remarks. |
|---|---|---|---|---|---|---|---|---|---|---|---|
| d. | h. | in. | ° | ° | ° | lbs. | lbs. | pt. | pt. pt. pt. | 0—10. | |
| 31 | 9 | 29·926 | 46·8 | 45·2 | 1·6 | 0·0 | 0·0 | | | 10·0 | Scud. |
| | 10 | 934 | 46·3 | 45·0 | 1·3 | 0·0 | 0·0 | | | 10·0 | Id. |
| | 11 | 922 | 45·3 | 44·7 | 0·6 | 0·0 | 0·0 | | | 10·0 | Id. |
| | 12 | 921 | 45·6 | 43·8 | 1·8 | 0·0 | 0·0 | | | 10·0 | Id. |
| | 13 | 29·926 | 45·0 | 43·2 | 1·8 | 0·0 | 0·0 | | | 10·0 | Scud. |
| | 14 | 923 | 44·2 | 42·8 | 1·4 | 0·0 | 0·0 | | | 10·0 | Id. |
| | 15 | 904 | 44·2 | 43·0 | 1·2 | 0·0 | 0·0 | | | 10·0 | Id. |
| | 16 | 909 | 44·0 | 42·4 | 1·6 | 0·0 | 0·0 | | | 10·0 | Id. |
| | 17 | 907 | 43·5 | 42·2 | 1·3 | 0·0 | 0·0 | 2 | | 10·0 | Id. |
| | 18 | 909 | 43·8 | 42·4 | 1·4 | 0·0 | 0·0 | 3 | | 10·0 | Id.; rain$^{0·2}$ |
| | 19 | 914 | 44·3 | 42·6 | 1·7 | 0·0 | 0·0 | 4 | 4 : — : — | 10·0 | Id. |
| | 20 | 915 | 46·7 | 44·6 | 2·1 | 0·0 | 0·0 | | 4 : — : — | 10·0 | Id. |
| | 21 | 906 | 48·8 | 45·8 | 3·0 | 0·0 | 0·0 | 4 | 4 : — : — | 10·0 | Id. |
| | 22 | 902 | 50·1 | 47·1 | 3·0 | 0·0 | 0·0 | | 4 : — : — | 10·0 | Id. |
| | 23 | 894 | 52·7 | 49·3 | 3·4 | 0·0 | 0·0 | 4 | 4 : — : — | 10·0 | Id. |
| 1 | 0 | 887 | 54·9 | 51·1 | 3·8 | 0·0 | 0·0 | 3 | 5 : — : — | 9·7 | Id.; clouds broken to W. and NW. |
| | 1 | 882 | 55·5 | 51·4 | 4·1 | 0·0 | 0·0 | 6 | 5 : — : — | 8·0 | Id.; id. |
| | 2 | 875 | 55·6 | 52·0 | 3·6 | 0·1 | 0·1 | 7 | 5 : — : — | 4·0 | Id. |
| | 3 | 874 | 56·6 | 52·7 | 3·9 | 0·4 | 0·2 | 6 | 5 : — : — | 4·0 | Id. |
| | 4 | 866 | 52·6 | 49·6 | 3·0 | 0·4 | 0·1 | 5 | 5 : — : — | 3·0 | Id. |
| | 5 | 852 | 52·6 | 49·7 | 2·9 | 0·2 | 0·2 | 4 | 6 : — : — | 3·0 | Id. |
| | 6 | 844 | 51·2 | 48·8 | 2·4 | 0·3 | 0·2 | 6 | 6 : — : — | 9·7 | Id. |
| | 7 | 852 | 48·2 | 47·0 | 1·2 | 0·2 | 0·1 | 7 | | 10·0 | Id. |
| | 8 | 858 | 48·0 | 46·7 | 1·3 | 0·1 | 0·1 | 4 v. | | 10·0 | Id. |
| | 9 | 862 | 47·5 | 46·2 | 1·3 | 0·1 | 0·0 | 7 | | 10·0 | Id.; rain$^{0·2}$ |
| | 10 | 864 | 46·2 | 45·5 | 0·7 | 0·0 | 0·0 | | | 10·0 | Id. |
| | 11 | 869 | 46·4 | 45·2 | 1·2 | 0·0 | 0·0 | 4 | | 10·0 | Id. |
| | 12 | 871 | 46·8 | 45·7 | 1·1 | 0·0 | 0·0 | | | 10·0 | Id. |
| | 21½ | 29·841 | ... | ... | ... | 0·0 | 0·0 | 4 | | | |
| 2 | 13 | 29·871 | 43·9 | 41·7 | 2·2 | 0·1 | 0·0 | | | 10·0 | Densely clouded. |
| | 14 | 873 | 43·6 | 41·5 | 2·1 | 0·0 | 0·0 | | | 9·8 | A streak of sky on NE. horizon. |
| | 15 | 867 | 43·3 | 41·4 | 1·9 | 0·0 | 0·0 | | | 9·8 | Id. |
| | 16 | 867 | 42·4 | 41·0 | 1·4 | 0·0 | 0·0 | | 28 : — : — | 9·8 | Scud; cirri and cirro-strati to NE. |
| | 17 | 866 | 43·1 | 41·7 | 1·4 | 0·0 | 0·0 | | 28 : — : — | 8·0 | Id.; id. |
| | 18 | 873 | 44·4 | 42·2 | 2·2 | 0·0 | 0·0 | | | 8·0 | Id.; cirro-strati on horizon. |
| | 19 | 879 | 46·3 | 43·4 | 2·9 | 0·0 | 0·0 | | 4 : 29 : 28 | 5·0 | Id.; cirro-cumulo-strati; cirri; solar halo. |
| | 20 | 886 | 48·5 | 44·3 | 4·2 | 0·0 | 0·0 | 8 | 1 : — : — | 9·0 | Id.; cirrous haze over the sky; solar halo. |
| | 21 | 885 | 51·5 | 46·5 | 5·0 | 0·0 | 0·0 | 9 | 30 : — : — | 10·0 | Id. |
| | 22 | 880 | 53·1 | 47·7 | 5·4 | 0·0 | 0·0 | 9 | 28 : — : — | 10·0 | Id. |
| | 23 | 873 | 53·5 | 48·1 | 5·4 | 0·0 | 0·0 | 0 v. | 26 : — : — | 8·0 | Id.; loose cumuli on horizon. |
| 3 | 0 | 866 | 55·0 | 49·0 | 6·0 | 0·0 | 0·0 | | 30 : 26 : — | 7·0 | Scud in two currents; cumuli on horizon. |
| | 1 | 859 | 57·0 | 50·2 | 6·8 | 0·0 | 0·0 | | | 3·5 | Very thin clouds in zenith; cumuli on horizon. |
| | 2 | 860 | 59·9 | 52·3 | 7·6 | 0·0 | 0·0 | 14 | 26 : — : — | 3·5 | Scud and loose cumuli. |
| | 3 | 846 | 60·1 | 52·3 | 7·8 | 0·0 | 0·0 | 15 | 25 : — : — | 6·0 | Scud; loose cumuli on horizon. |
| | 4 | 842 | 65·4 | 56·4 | 9·0 | 0·0 | 0·0 | 20 | 25 : — : — | 8·0 | Scud and cumuli. |
| | 5 | 832 | 62·3 | 53·7 | 8·6 | 0·1 | 0·0 | 19 | 25 : — : — | 8·0 | Id.; cirrous haze on horizon. |
| | 6 | 823 | 61·2 | 53·8 | 7·4 | 0·0 | 0·0 | | 25 : — : — | 8·0 | Id. |
| | 7 | 825 | 57·9 | 52·1 | 5·8 | 0·0 | 0·0 | 30 | 25 : — : — | 9·0 | Id.; cirri, cirro-strati, cirrous haze. |
| | 8 | 829 | 58·1 | 52·2 | 5·9 | 0·0 | 0·0 | 20 | 25 : — : — | 8·0 | Id.; cirri, cirrous haze. |
| | 9 | 829 | 55·0 | 50·4 | 4·6 | 0·3 | 0·0 | 20 | 25 : — : 28 | 3·0 | Scud; patches of woolly cirri; haze on horizon. |
| | 10 | 837 | 50·3 | 47·8 | 2·5 | 0·0 | 0·0 | 22 | | 1·0 | Cirro-strati and cirrous haze to N. |
| | 11 | 833 | 48·8 | 46·3 | 2·5 | 0·0 | 0·0 | 22 | | 1·5 | Id. |
| | 12 | 833 | 44·9 | 44·0 | 0·9 | 0·0 | 0·0 | | | 1·0 | Id. on horizon. |
| | 13 | 29·835 | 42·0 | 41·8 | 0·2 | 0·0 | 0·0 | | | 1·0 | Cirro-strati and cirrous haze on hor. |
| | 14 | 819 | 42·8 | 42·0 | 0·8 | 0·0 | 0·0 | | | 1·5 | Id.; very hazy on hor. |

The direction of the wind is indicated by the number of the point of the compass, reckoning N. = 0, E. = 8, S. = 16, W. = 24. The motions of the three strata of clouds, Sc. (scud), C.-s. (cirro-stratus), and Cir. (cirrus), are indicated in a similar manner.

June 2d 19h. Scud in loose rounded masses, moving very slowly, moving in eddies at 19h 25m.

| Gött. Mean Time. | Barometer at 32°. | Thermometers. Dry. | Wet. | Diff. | Wind. Maximum force in 1h. | 10m. | From | Clouds, Sc. : C.-s. : Ci., moving from | Sky clouded. | Species of Clouds and Meteorological Remarks. |
|---|---|---|---|---|---|---|---|---|---|---|
| d. h. | in. | ° | ° | ° | lbs. | lbs. | pt. | pt. pt. pt. | 0—10. | |
| 3 15 | 29·817 | 43·0 | 42·2 | 0·8 | 0·0 | 0·0 | 19 | 28 : — : — | 1·5 | Patches of scud; cirro-strati and cirrous haze. |
| 16 | 808 | 41·0 | 40·7 | 0·3 | 0·0 | 0·0 | 20 | 27 : — : — | 3·5 | Scud, smoky scud; cirro-strati to NE., tinged with red. |
| 17 | 796 | 41·7 | 41·2 | 0·5 | 0·0 | 0·0 | | — : 26 : — | 8·0 | Cirro-cumulo-strati; cirro-strati, cirrous haze; foggy. |
| 18 | 786 | 46·1 | 45·0 | 1·1 | 0·0 | 0·0 | | 26 : — : — | 9·7 | Scud and loose cumuli; haze. |
| 19 | 795 | 49·9 | 47·8 | 2·1 | 0·0 | 0·0 | 20 | 21 : — : — | 10·0 | Loose scud; hazy; nearly homogeneous. |
| 20 | 798 | 52·1 | 50·4 | 1·7 | 0·0 | 0·0 | 20 | | 10·0 | As before; rather more homogeneous. |
| 21 | 787 | 54·0 | 52·1 | 1·9 | 0·1 | 0·1 | 20 | 20 : — : — | 10·0 | Misty scud. |
| 22 | 777 | 55·4 | 52·9 | 2·5 | 0·6 | 0·3 | 18 | 20 : — : — | 10·0 | Id. |
| 23 | 772 | 59·2 | 55·8 | 3·4 | 1·0 | 0·6 | | 20 : — : — | 10·0 | Id. |
| 4 0 | 747 | 62·6 | 58·0 | 4·6 | 1·0 | 0·8 | 18 | 21 : — : — | 9·5 | Scud and loose cumuli; very hazy; sultry. |
| 1 | 716 | 65·8 | 57·8 | 8·0 | 2·0 | 2·0 | 18 | 21 : — : — | 7·0 | Id.; id. |
| 2 | 709 | 65·7 | 56·9 | 8·8 | 2·7 | 1·7 | 19 | 22 : — : — | 8·0 | Id.; linear cirri, cirrous haze. |
| 3 | 712 | 66·7 | 57·0 | 9·7 | 2·2 | 1·8 | 20 | 24 : — : — | 9·0 | Id.; cirrous haze, cirro-strati. |
| 4 | 712 | 61·0 | 54·4 | 6·6 | 1·9 | 1·3 | 24 | 24 : — : — | 9·8 | Id.; id. |
| 5 | 703 | 61·2 | 55·0 | 6·2 | 0·7 | 0·9 | 21 | 24 : — : — | 9·9 | Id.; haze; cirro-strati to S. |
| 6 | 701 | 58·9 | 53·7 | 5·2 | 1·4 | 1·6 | 20 | 24 : — : — | 10·0 | Id.; id.; id. |
| 7 | 697 | 58·3 | 53·5 | 4·8 | 2·0 | 1·0 | 20 | 24 : — : — | 10·0 | Id.; id.; id. |
| 8 | 694 | 56·6 | 53·2 | 3·4 | 1·3 | 0·8 | 20 | 24 : — : — | 8·5 | Scud; woolly and linear cirri. |
| 9 | 703 | 54·7 | 52·0 | 2·7 | 1·0 | 0·5 | 20 | — : — : 24 | 7·5 | Cirri; cirro-cumuli, scud, cirrous haze. |
| 10 | 700 | 53·2 | 51·0 | 2·2 | 0·5 | 0·3 | 22 | 24 : — : — | 9·2 | Scud; cirro-strati, cirrous clouds; haze. |
| 11 | 704 | 52·5 | 50·8 | 1·7 | 0·4 | 0·1 | 21 | 24 : — : — | 9·8 | Id.; id.; id.; id. |
| 12 | 702 | 50·5 | 49·5 | 1·0 | 0·1 | 0·0 | | | 9·2 | Scud and cirrous clouds; sky hazy. |
| 13 | 29·690 | 50·0 | 49·1 | 0·9 | 0·0 | 0·0 | | | 9·8 | Scud and cirrous clouds. |
| 14 | 671 | 50·5 | 49·7 | 0·8 | 0·0 | 0·0 | 20 | 20 : — : — | 10·0 | Scud. |
| 15 | 654 | 52·0 | 51·0 | 1·0 | 0·0 | 0·0 | 20 | 20 : — : — | 10·0 | Id. |
| 16 | 637 | 51·0 | 50·0 | 1·0 | 0·1 | 0·0 | 20 | 20 : 20 : — | 9·8 | Thin scud; cir.-cum., cir.-str.; woolly cirri, cir. haze. |
| 17 | 618 | 51·6 | 50·5 | 1·1 | 0·0 | 0·0 | 20 | 19 : — : — | 10·0 | Scud; id., id.; a few drops of rain. |
| 18 | 610 | 53·5 | 51·8 | 1·7 | 0·0 | 0·1 | 17 | 18 : 24 : — | 10·0 | Id.; cirrous clouds; clouds thicker; drops of rain. |
| 19 | 595 | 53·0 | 52·7 | 0·3 | 0·1 | 0·0 | 16 | | 10·0 | Id.; rain$^{2·5}$ |
| 20 | 575 | 55·3 | 54·0 | 1·3 | 0·3 | 0·2 | 15 | | 10·0 | Id.; cirro-strati to S.; rain$^{2·0}$ |
| 21 | 565 | 56·7 | 55·2 | 1·5 | 0·3 | 0·1 | 15 | 18 : — : — | 10·0 | Id.; rain$^{2}$ |
| 22 | 548 | 55·2 | 53·4 | 1·8 | 0·5 | 0·3 | 15 | | 10·0 | Id.; id. |
| 23 | 523 | 55·7 | 54·4 | 1·3 | 0·6 | 0·1 | 15 | 17 : — : — | 10·0 | Id. |
| 5 0 | 500 | 60·2 | 57·7 | 2·5 | 0·9 | 0·6 | 19 | 19 : — : — | 10·0 | Id. |
| 1 | 491 | 62·0 | 59·2 | 2·8 | 1·1 | 1·5 | 18 | 19 : — : — | 10·0 | Id.; cirri and cirro-strati to S. |
| 2 | 489 | 61·2 | 58·8 | 2·4 | 1·1 | 1·1 | 18 | 18 : — : — | 10·0 | Id. |
| 3 | 491 | 60·8 | 58·0 | 2·8 | 1·4 | 0·9 | 18 | | 10·0 | Id. |
| 4 | 475 | 60·4 | 57·2 | 3·2 | 2·5 | 1·4 | 20 | | 10·0 | Id.; cirro-strati to S. |
| 5 | 468 | 61·9 | 58·7 | 3·2 | 2·3 | 0·9 | 17 | 19 : 20 : — | 9·9 | Id.; cirro-cumulo-strati; cirro-strati. |
| 6 | 457 | 60·9 | 58·1 | 2·8 | 1·7 | 0·4 | 18 | 18 : 20 : — | 9·8 | Id.; id. |
| 7 | 453 | 60·8 | 58·1 | 2·7 | 0·4 | 0·6 | 18 | 19 : 20 : — | 9·9 | Id.; id. |
| 8 | 453 | 60·2 | 56·9 | 3·3 | 0·9 | 0·3 | 18 | 19 : 20 : — | 10·0 | Id.; id.; rain$^{1-2}$, drops large. |
| 9 | 451 | 58·3 | 56·4 | 1·9 | 0·5 | 0·3 | 18 | | 10·0 | Id.; id.; rain$^{1}$ since 8h. |
| 10 | 452 | 57·3 | 55·4 | 1·9 | 0·3 | 0·4 | 19 | | 10·0 | Id.; id.; rain$^{1}$ |
| 11 | 437 | 56·3 | 54·6 | 1·7 | 0·2 | 0·2 | 20 | | 10·0 | Id.; cirro-strati. |
| 12 | 436 | 54·9 | 53·7 | 1·2 | 0·4 | 0·0 | | | 10·0 | Id.; id. |
| 13 | 29·430 | 53·7 | 53·1 | 0·6 | 0·0 | 0·0 | | | 10·0 | Scud; cirro-strati. |
| 14 | 421 | 54·3 | 53·2 | 1·1 | 0·0 | 0·0 | | | 10·0 | Id.; id. |
| 15 | 399 | 53·7 | 52·9 | 0·8 | 0·0 | 0·0 | | | 10·0 | Id.; id. |
| 16 | 388 | 54·2 | 52·9 | 1·3 | 0·1 | 0·0 | 16 | — : 17 : — | 10·0 | Cirro-strati and cirrous clouds; scud. |
| 17 | 377 | 55·7 | 54·0 | 1·7 | 0·4 | 0·1 | 17 | 19 : — : — | 10·0 | Scud; cirro-strati and cirrous clouds. |
| 18 | 372 | 56·3 | 54·2 | 2·1 | 0·2 | 0·2 | 16 | 19 : — : — | 10·0 | Id.; id. |
| 19 | 367 | 56·8 | 54·9 | 1·9 | 0·7 | 0·4 | 16 | 18 : 17 : — | 10·0 | Id.; id. |
| 20 | 365 | 60·4 | 57·1 | 3·3 | 0·8 | 1·0 | 16 | | 9·9 | Id.; id.; drops of rain. |
| 21 | 369 | 59·3 | 56·3 | 3·0 | 0·6 | 0·6 | 17 | 18 : — : — | 10·0 | Id.; a few drops of rain. |
| 22 | 357 | 64·6 | 59·8 | 4·8 | 0·8 | 0·4 | 17 | 17 : 17 : 17 | 9·5 | Scud, cumuli, cirri, cirro-strati, cirrous haze. |

The direction of the wind is indicated by the number of the point of the compass, reckoning N. = 0, E. = 8, S. = 16, W. = 24. The motions of the three strata of clouds, Sc. (scud), C.-s. (cirro-stratus), and Cir. (cirrus), are indicated in a similar manner.

June 3d 22h. Anemometer altered; a small additional weight applied so as to keep the inverted vessel from touching the bottom of the cistern; it is believed that in the previous state the indications below 1 lb. were slightly too small.

| Gött. Mean Time. | Barometer at 32°. | Thermometers. Dry. | Wet. | Diff. | Wind. Maximum force in 1h. | 10m. | From | Clouds, Sc. : C.-s. : Ci., moving from | Sky clouded. | Species of Clouds and Meteorological Remarks. |
|---|---|---|---|---|---|---|---|---|---|---|
| d. h. | in. | ° | ° | ° | lbs. | lbs. | pt. | pt. pt. pt. | 0—10. | |
| 5 23 | 29·349 | 66·5 | 61·0 | 5·5 | 1·1 | 0·6 | 17 | 18 : — : — | 9·9 | Scud, cumuli ; cirri to W. |
| 6 0 | 352 | 68·6 | 62·6 | 6·0 | 0·9 | 0·3 | 16 | 18 : — : 18 | 9·0 | Cumuli, scud, and diffuse cirri. |
| 1 | 348 | 67·2 | 60·5 | 6·7 | 1·0 | 0·6 | 20 | 18 : — : 18 | 9·2 | Id., id., id. |
| 2 | 344 | 67·2 | 61·1 | 6·1 | 0·6 | 0·3 | | 18 : — : 18 | 9·9 | Id., id., id. |
| 3 | 342 | 66·7 | 60·4 | 6·3 | 0·4 | 0·3 | 18 | 18 : — : 18 | 9·5 | Id., id., id. |
| 4 | 338 | 68·6 | 62·1 | 6·5 | 0·4 | 0·2 | 19 | | 9·5 | Id. |
| 5 | 334 | 65·3 | 60·4 | 4·9 | 0·4 | 0·0 | 24 | | 9·0 | Id. ; cirri and cir.-str. to NE. |
| 6 | 332 | 66·6 | 60·7 | 5·9 | 0·5 | 0·8 | 20 | 18 : — : — | 6·0 | Id., scud ; large piles of cum. and cum.-str. ; clouds [electric looking. |
| 7 | 343 | 64·0 | 59·2 | 4·8 | 0·9 | 0·4 | 18 | 20 : — : — | 3·0 | Masses of loose cumuli ; large piles of cum.-str. to E. |
| 8 | 356 | 61·5 | 57·4 | 4·1 | 0·6 | 0·2 | 19 | — : — : 24 | 2·0 | Patches of cirri ; cirro-strati and cumulo-strati on hor. |
| 9 | 376 | 57·5 | 55·4 | 2·1 | 0·5 | 0·1 | 18 | | 2·0 | Cir.-cum. scud ; cir.-str. ; cum.-str. ; patches of cirri. |
| 10 | 380 | 55·5 | 53·9 | 1·6 | 0·2 | 0·1 | 17 | — : 22 : — | 3·0 | Id. ; id. |
| 11 | 384 | 55·0 | 53·8 | 1·2 | 0·4 | 0·1 | | | 9·0 | Thick scud to W. ; cumuli and scud to E. |
| 12 | 390 | 56·0 | 54·4 | 1·6 | 0·2 | 0·2 | 21 | | 9·6 | Scud. |
| 13 | 29·386 | 56·0 | 54·3 | 1·7 | 0·3 | 0·1 | 20 | | 9·0 | Scud ; sky to NE. and in zenith. |
| 14 | 391 | 55·5 | 53·2 | 2·3 | 0·4 | 0·3 | 18 | 20 : — : — | 10·0 | Id. |
| 15 | 391 | 55·1 | 53·9 | 1·2 | 0·6 | 0·2 | | 24 : 24 : — | 9·5 | Loose scud moving rapidly ; denser scud, slowly. |
| 16 | 382 | 55·4 | 53·9 | 1·5 | 0·7 | 0·4 | 20 | 22 : — : — | 10·0 | Scud ; cirri and cirro-strati. |
| 17 | 405 | 55·3 | 53·3 | 2·0 | 0·3 | 0·2 | 18 | 22 : — : — | 10·0 | Id. ; id. radiating from NW. ; drops [of rain. |
| 18 | 413 | 55·2 | 53·2 | 2·0 | 0·2 | 0·1 | 20 | 20 : — : — | 10·0 | Id. ; id. ; rain[1] at 18h 20m. |
| 19 | 407 | 58·0 | 55·3 | 2·7 | 0·3 | 0·4 | 18 | 19 : 22 : — | 10·0 | Id. ; cirro-strati and cirrous clouds. |
| 20 | 410 | 58·1 | 55·6 | 2·5 | 1·8 | 1·0 | 18 | 20 : — : — | 10·0 | Id. ; cirro-strati. |
| 21 | 422 | 63·4 | 58·6 | 4·8 | 2·4 | 0·9 | 19 | 20 : 20 : — | 9·5 | Loose scud moving quickly ; cum.-str. and cirro-strati, [slowly. |
| 22 | 418 | 58·9 | 55·7 | 3·2 | 1·4 | 0·5 | 19 | 19 : — : — | 10·0 | Scud. |
| 23 | 404 | 63·0 | 57·4 | 5·6 | 1·3 | 1·5 | 20 | 19 : — : — | 9·8 | Id. ; cirro-strati. |
| 7 0 | 394 | 66·4 | 59·6 | 6·8 | 1·3 | 0·3 | 18 | 17 : — : — | 9·9 | Id. ; id. |
| 1 | 375 | 65·7 | 59·4 | 6·3 | 1·1 | 1·3 | 15 | 18 : — : — | 10·0 | Id. ; id. |
| 2 | 360 | 65·7 | 59·6 | 6·1 | 1·3 | 0·7 | 16 | 18 : — : — | 10·0 | Id. ; id. |
| 3 | 335 | 65·3 | 58·6 | 6·7 | 1·5 | 2·2 | 15 | 15 : — : — | 10·0 | Thick dark scud ; dense cir.-str. and cir. haze ; electric [looking to S. and NW. |
| 4 | 312 | 58·0 | 56·6 | 1·4 | 2·2 | 0·4 | 14 | | 10·0 | Dense mass of scud and cir.-str. ; rain[2-4] since 3h 20m. |
| 5 | 291 | 58·2 | 57·8 | 0·4 | 1·0 | 0·3 | 17 | 18 : — : — | 10·0 | Loose smoky scud ; rain[2-4] |
| 6 | 282 | 56·8 | 56·1 | 0·7 | 2·0 | 0·8 | 17 | 20 : — : — | 10·0 | Id. ; rain[0·5] |
| 7 | 274 | 57·8 | 57·0 | 0·8 | 1·4 | 0·2 | 18 | 20 : — : — | 10·0 | Scud ; rain[1·5] |
| 8 | 270 | 56·6 | 55·7 | 0·9 | 0·8 | 0·2 | 17 | 20 : — : — | 10·0 | Id. ; rain[1] |
| 9 | 263 | 56·3 | 55·2 | 1·1 | 0·9 | 0·7 | 18 | | 10·0 | Id. ; rain[1] at intervals. |
| 10 | 263 | 55·2 | 54·8 | 0·4 | 1·1 | 0·1 | 20 | | 10·0 | Id. ; id. |
| 11 | 283 | 55·7 | 54·7 | 1·0 | 0·4 | 0·2 | 20 | | 9·5 | Id. |
| 12 | 319 | 56·2 | 54·9 | 1·3 | 0·2 | 0·0 | 20 | 20 : — : — | 10·0 | Id. |
| 13 | 29·356 | 56·7 | 54·7 | 2·0 | 0·9 | 0·6 | 20 | | 10·0 | Scud. |
| 14 | 411 | 56·6 | 53·8 | 2·8 | 1·0 | 1·0 | 22 | 24 : — : — | 9·8 | Id. ; rain[2] about 13h 55m. |
| 15 | 440 | 55·4 | 53·3 | 2·1 | 1·2 | 0·3 | 22 | 24 : — : — | 9·0 | Thin smoky scud ; cirro-strati, nearly stationary. |
| 16 | 458 | 54·2 | 52·3 | 1·9 | 0·8 | 0·6 | 20 | 25 : — : — | 2·5 | Scud ; id. |
| 17 | 497 | 54·2 | 52·2 | 2·0 | 0·6 | 0·2 | 20 | 25 : — : — | 1·5 | Id. ; id. |
| 18 | 529 | 55·0 | 52·7 | 2·3 | 0·5 | 0·4 | 22 | 25 : — : — | 6·0 | Id. |
| 19 | 549 | 57·8 | 56·0 | 1·8 | 0·4 | 0·3 | 22 | 23 : — : — | 8·0 | Id. ; cumuli and cirro-strati to S. |
| 20 | 571 | 58·9 | 55·2 | 3·7 | 0·8 | 0·2 | 20 | | 9·0 | Id. ; id. SE. and NE. |
| 21 | 601 | 58·3 | 55·2 | 3·1 | 0·6 | 0·6 | 19 | 22 : — : — | 10·0 | Id. |
| 22 | 626 | 59·8 | 55·2 | 4·6 | 0·5 | 0·9 | 24 | 22 : — : — | 9·5 | Id. |
| 23 | 640 | 65·0 | 57·4 | 7·6 | 1·3 | 1·7 | 20 | 20 : — : — | 5·0 | Scud and loose cumuli ; woolly and linear cirri. |
| 8 0 | 644 | 66·7 | 57·2 | 9·5 | 1·4 | 1·3 | 19 | — : — : 22 | 8·0 | Woolly cirri ; scud and loose cumuli on horizon. |
| 1 | 655 | 67·5 | 59·2 | 8·3 | 1·8 | 2·0 | 20 | 23 : — : — | 2·5 | Scud ; cirri and cirrous haze ; cumuli on horizon. |
| 2 | 664 | 66·5 | 58·8 | 7·7 | 2·3 | 0·1 | 19 | 23 : — : 23 | 3·0 | Scud and loose cumuli ; varieties of cirri. |
| 3 | 675 | 67·2 | 59·1 | 8·1 | 2·0 | 2·0 | 20 | 22 : — : — | 2·0 | Id. ; cirri and cirrous haze on hor. |
| 4 | 683 | 66·2 | 58·2 | 8·0 | 2·4 | 1·8 | 20 | | 2·0 | Id. ; id. |
| 5 | 680 | 64·0 | 56·0 | 8·0 | 2·5 | 1·6 | 19 | — : — : 20 | 3·0 | Diffuse cirri ; patches of scud ; cumuli ; cirrous haze. |
| 6 | 677 | 62·2 | 56·0 | 6·2 | 1·1 | 1·4 | 20 | — : — : 20 | 8·0 | Id., cirrous haze, cirro-strati ; faint solar halo. |

The direction of the wind is indicated by the number of the point of the compass, reckoning N. = 0, E. = 8, S. = 16, W. = 24. The motions of the three strata of clouds, Sc. (scud), C.-s. (cirro-stratus), and Cir. (cirrus), are indicated in a similar manner.

June 7d 14h. Observation made at 14h 15m.

| Gött. Mean Time. | | Barometer at 32°. | Thermometers. | | | Wind. | | | Clouds, Sc.: C.-s.: Ci., moving from | Sky clouded. | Species of Clouds and Meteorological Remarks. |
|---|---|---|---|---|---|---|---|---|---|---|---|
| | | | Dry. | Wet. | Diff. | Maximum force in 1h. | Maximum force in 10m. | From | | | |
| d. | h. | in. | ° | ° | ° | lbs. | lbs. | pt. | pt. pt. pt. | 0—10. | |
| 8 | 7 | 29·672 | 59·9 | 54·7 | 5·2 | 1·5 | 1·0 | 20 | 19 : — : — | 10·0 | Scud; thick cirrous clouds. |
| | 8 | 671 | 58·3 | 53·7 | 4·6 | 1·2 | 0·2 | 19 | 19 : — : — | 10·0 | Id.; id. |
| | 9 | 671 | 56·7 | 52·2 | 4·5 | 0·7 | 0·1 | 18 | — : 18 : — | 10·0 | Cirro-stratous scud; dense cirro-strati. |
| | 10 | 678 | 56·3 | 52·3 | 4·0 | 0·5 | 0·2 | 18 | — : 18 : — | 10·0 | Id.; id. |
| | 11 | 676 | 53·7 | 51·1 | 2·6 | 0·2 | 0·5 | 19 | 20 : — : — | 7·0 | Scud; cirrous clouds. |
| | 12 | 665 | 54·8 | 51·2 | 3·6 | 1·6 | 1·1 | 18 | 20 : — : — | 9·5 | Id. |
| | 22 | 29·656 | ... | ... | ... | 1·3 | ... | 20 | | | |
| 9 | 13 | 29·609 | 52·9 | 51·0 | 1·9 | 2·5 | 0·1 | 15 | | 3·0 | Scud and cirro-strati on horizon. |
| | 14 | 606 | 51·7 | 50·9 | 0·8 | 0·5 | 0·2 | | | 2·0 | Cirro-strati to E.; scud to S. |
| | 15 | 606 | 51·1 | 50·0 | 1·1 | 0·3 | 0·2 | 18 | 18 : — : — | 4·0 | Scud and loose cumuli; cirri and cirro-strati to E. |
| | 16 | 603 | 50·6 | 49·9 | 0·7 | 0·3 | 0·3 | 17 | | 2·0 | Cirro-strati, tinged with red. |
| | 17 | 619 | 50·0 | 48·9 | 1·1 | 0·3 | 0·4 | 17 | | 2·5 | Woolly cirri to S.; scud on Cheviot; cirro-strati. |
| | 18 | 629 | 50·0 | 48·7 | 1·3 | 0·3 | 0·1 | | | 2·0 | Id.; id.; id. |
| | 19 | 625 | 52·8 | 50·1 | 2·7 | 0·4 | 0·3 | 19 | 20 : — : — | 1·5 | Scud and cumuli; patches of cirro-strati. |
| | 20 | 625 | 54·0 | 50·4 | 3·6 | 0·7 | 0·6 | 17 | 20 : — : — | 2·0 | Id. |
| | 21 | 614 | 56·1 | 50·2 | 5·9 | 1·3 | 0·8 | 18 | 21 : 19 : — | 7·0 | Id.; cir.-cum.-str.; cum. and cum.-str. |
| | 22 | 610 | 60·0 | 53·5 | 6·5 | 1·7 | 1·6 | 18 | 21 : 18 : — | 8·0 | Id.; woolly cirri and cirro-strati. |
| | 23 | 607 | 61·6 | 53·8 | 7·8 | 1·0 | 1·0 | 18 | 21 : — : — | 9·0 | Id.; cirrous clouds. |
| 10 | 0 | 599 | 63·7 | 55·2 | 8·5 | 2·1 | 2·3 | 19 | | 9·0 | Scud and loose cumuli; shower$^{0·5}$ |
| | 1 | 621 | 53·7 | 50·8 | 2·9 | 2·4 | 0·9 | 21 | | 10·0 | Dense cir.-str. and scud; shower$^{6}$ at 0h 40m; rain$^{2}$ |
| | 2 | 609 | 61·0 | 56·0 | 5·0 | 0·9 | 0·4 | 24 | 23 : — : — | 9·5 | Scud and loose cumuli; woolly cirri and cirro-strati. |
| | 3 | 615 | 57·4 | 52·0 | 5·4 | 1·5 | 0·5 | 22 | 24 : — : — | 9·5 | Id.; cir.-str. and cir. haze; showers. |
| | 4 | 615 | 61·5 | 53·2 | 8·3 | 1·1 | 1·4 | 24 | 23 : — : — | 9·5 | Id. |
| | 5 | 624 | 60·1 | 51·7 | 8·4 | 1·9 | 1·3 | 22 | 23 : — : — | 7·5 | Id.; cirro-strati to E. |
| | 6 | 637 | 59·3 | 52·3 | 7·0 | 1·6 | 0·4 | 24 | 23 : — : — | 5·0 | Id.; fine cumuli to NE. |
| | 7 | 651 | 58·5 | 52·0 | 6·5 | 1·8 | 1·1 | 23 | | 2·0 | Id.; cirro-strati and cumulo-strati. |
| | 8 | 679 | 54·7 | 48·9 | 5·8 | 1·5 | 1·2 | 22 | 24 : — : — | 1·5 | Id.; cirro-strati to E. |
| | 9 | 709 | 51·0 | 46·5 | 4·5 | 1·7 | 0·7 | | | 0·7 | Scud and cirro-strati on E. horizon. |
| | 10 | 726 | 50·0 | 45·8 | 4·2 | 0·2 | 0·1 | 22 | | 0·2 | Id. |
| | 11 | 752 | 47·8 | 44·7 | 3·1 | 0·3 | 0·2 | 22 | | 0·5 | Id. |
| | 12 | 760 | 45·8 | 43·6 | 2·2 | 0·3 | 0·1 | | 24 : — : — | 0·3 | Patches of scud. |
| | 13 | 29·771 | 44·8 | 42·8 | 2·0 | 0·1 | 0·1 | | | 0·1 | Patches of scud; strong twilight. |
| | 14 | 781 | 42·9 | 41·7 | 1·2 | 0·4 | 0·0 | 20 | | 0·2 | Id. |
| | 15 | 781 | 44·9 | 42·8 | 2·1 | 0·5 | 0·4 | 20 | | 0·2 | Cirrous-haze to E.; scud to S. |
| | 16 | 797 | 43·2 | 41·8 | 1·4 | 0·6 | 0·2 | 18 | 26 : — : — | 0·5 | Id.; scud. |
| | 17 | 812 | 47·2 | 43·9 | 3·3 | 0·5 | 0·5 | 19 | 26 : 28 : — | 0·5 | Scud; semifluid-like cirro-cumuli. |
| | 18 | 826 | 46·8 | 44·8 | 2·0 | 0·3 | 0·3 | 18 | 26 : — : — | 0·5 | Id. |
| | 19 | 834 | 51·0 | 48·0 | 3·0 | 0·2 | 0·2 | 18 | 25 : — : — | 2·0 | Id.; cirri to W.; haze on E. horizon. |
| | 20 | 844 | 52·9 | 49·0 | 3·9 | 0·2 | 0·2 | 23 | 24 : — : — | 3·5 | Id.; cirri and cirro-strati; cumuli to SE. |
| | 21 | 847 | 56·5 | 51·2 | 5·3 | 0·6 | 0·3 | 21 | 22 : 26 : — | 9·0 | Loose smoky scud; thicker scud. |
| | 22 | 855 | 57·5 | 51·2 | 6·3 | 0·9 | 0·5 | 23 v. | 23 : — : — | 9·0 | Scud; cirri and cirro-strati; cumuli to N. |
| | 23 | 861 | 60·8 | 52·7 | 8·1 | 1·1 | 0·5 | 23 | | 9·0 | Id.; id. |
| 11 | 0 | 862 | 62·9 | 54·3 | 8·6 | 0·9 | 0·2 | 25 | 24 : — : — | 9·0 | Scud and loose cumuli; cirro-strati and cirro-cumuli. |
| | 1 | 866 | 64·9 | 55·3 | 9·6 | 1·0 | 0·6 | 20 | — : 24 : — | 8·5 | Cirro-cumuli; scud and loose cum.; cirri, cirro-strati. |
| | 2 | 865 | 65·9 | 56·7 | 9·2 | 0·8 | 0·6 | 20 | 24 : — : — | 9·0 | Scud and loose cumuli. |
| | 3 | 865 | 63·2 | 55·3 | 7·9 | 0·9 | 0·2 | 22 | 23 : — : — | 9·0 | Id. |
| | 4 | 861 | 64·8 | 56·8 | 8·0 | 1·6 | 1·5 | 19 | 22 : 25 : — | 9·8 | Scud; scud and cumuli; cirrous haze; wild sky. |
| | 5 | 870 | 61·5 | 55·3 | 6·2 | 2·2 | 1·7 | 22 v. | 24 : — : — | 10·0 | Id.; cumuli, cirro-strati, and cirrous haze. |
| | 6 | 856 | 61·0 | 55·2 | 5·8 | 1·2 | 1·8 | 20 | 22 : 24 : — | 9·8 | Id.; bands of cirro-strati, cirrous haze; drops of rain. |
| | 7 | 856 | 58·9 | 54·2 | 4·7 | 1·9 | 0·7 | 19 | | 9·5 | As before. |
| | 8 | 855 | 57·0 | 51·9 | 5·1 | 0·7 | 0·1 | 19 | | 9·2 | Id. |
| | 9 | 848 | 55·0 | 51·2 | 3·8 | 0·4 | 0·4 | 19 | | 9·5 | Cirro-strati, woolly and cymoid cirri; scud on hor. |
| | 10 | 844 | 54·8 | 51·0 | 3·8 | 0·7 | 0·6 | 18 | | 10·0 | Id. |
| | 11 | 832 | 53·0 | 50·6 | 2·4 | 1·0 | 0·2 | 19 | | 10·0 | Id.; rain$^{0·5}$ |
| | 12 | 835 | 52·2 | 50·8 | 1·4 | 0·2 | 0·1 | 20 | | 10·0 | Id.; id. |

The direction of the wind is indicated by the number of the point of the compass, reckoning N. = 0, E. = 8, S. = 16, W. = 24. The motions of the three strata of clouds, Sc. (scud), C.-s. (cirro-stratus), and Cir. (cirrus), are indicated in a similar manner.

June 10d 12h 50m. (Midnight.) The observer found that he could read print from types 0·1 inch deep with considerable ease; Moon not risen.

| Gött. Mean Time. | Barometer at 32°. | Thermometers. Dry. | Wet. | Diff. | Wind. Maximum force in 1h. | 10m. | From | Clouds, Sc. : C.-s. : Ci., moving from | Sky clouded. | Species of Clouds and Meteorological Remarks. |
|---|---|---|---|---|---|---|---|---|---|---|
| d. h. | in. | ° | ° | ° | lbs. | lbs. | pt. | pt. pt. pt. | 0—10. | |
| 11 13 | 29·801 | 51·5 | 50·9 | 0·6 | 0·2 | 0·3 | 19 | 20 : — : — | 7·5 | Scud. |
| 14 | 786 | 53·0 | 51·9 | 1·1 | 0·9 | 0·2 | 19 | | 10·0 | Id.; rain0·2 |
| 15 | 766 | 51·7 | 51·3 | 0·4 | 0·8 | 0·2 | 16 | 20 : — : — | 10·0 | Id. |
| 16 | 754 | 53·0 | 52·3 | 0·7 | 0·7 | 0·4 | 20 | 22 : — : 25 | 4·0 | Scud and loose cumuli; cirri. |
| 17 | 766 | 53·0 | 51·6 | 1·4 | 0·4 | 0·1 | 16 | 21 : — : — | 3·0 | Id.; woolly cirri. |
| 18 | 774 | 52·7 | 49·7 | 3·0 | 0·4 | 0·4 | 20 | | 3·0 | Id.; id. |
| 19 | 788 | 53·1 | 48·7 | 4·4 | 0·8 | 0·5 | 23 | 21 : — : 26 | 5·0 | Scud; woolly cirri. |
| 20 | 782 | 54·0 | 48·9 | 5·1 | 0·9 | 0·5 | 23 | 22 : — : — | 2·0 | Id.; cirri to E. |
| 21 | 773 | 55·8 | 50·1 | 5·7 | 1·0 | 0·4 | 21 | | 1·5 | Cirri, cirrous haze; patches of scud to N. |
| 22 | 786 | 59·5 | 52·9 | 6·6 | 0·9 | 0·7 | 21 | — : — : 26 | 2·0 | Woolly and curled cirri; patches of scud. |
| 23 | 795 | 62·3 | 54·2 | 8·1 | 0·9 | 0·5 | 22 | | 1·5 | Id.; id. |
| 12 0 | 767 | 64·8 | 56·8 | 8·0 | 0·6 | 0·6 | 22 | — : — : 25 | 4·0 | Cirri and cirrous haze over the sky; solar halo. |
| 1 | 755 | 66·8 | 57·2 | 9·6 | 0·8 | 0·7 | 20 | — : — : 24 | 5·0 | Cirri; cirro-strati, loose cumuli, scud; faint halo. |
| 2 | 740 | 66·5 | 57·2 | 9·3 | 1·6 | 0·6 | 21 | | 9·8 | Cirri and cirrous haze, cir.-str.; patches of scud; halo. |
| 3 | 736 | 66·9 | 58·0 | 8·9 | 1·4 | 0·4 | 20 | | 10·0 | Id., id.; halo gone. |
| 4 | 727 | 60·8 | 52·7 | 8·1 | 1·2 | 0·3 | 22 | — : 24 : — | 10·0 | Cir.-str. scud; scud, cirri, cir. haze; drops of rain at 4½h. |
| 5 | 703 | 60·0 | 53·9 | 6·1 | 0·9 | 0·7 | 20 | 20 : — : — | 10·0 | Patches of scud; dense mass of cirro-strati. |
| 6 | 670 | 59·9 | 56·3 | 3·6 | 1·0 | 1·2 | 20 | 20 : — : — | 10·0 | Loose scud; dense cirro-strati and cirrous haze. |
| 7 | 674 | 57·4 | 54·4 | 3·0 | 1·7 | 0·8 | 20 | | 10·0 | As before; at 6h 45m barometer 29·679. |
| 8 | 633 | 57·2 | 54·4 | 2·8 | 1·5 | 1·4 | 18 | 19 : 22 : — | 9·5 | Loose scud; cirro-strati, cirro-cumuli; woolly cirri. |
| 9 | 611 | 57·0 | 54·3 | 2·7 | 1·0 | 1·6 | 18 | 20 : — : — | 10·0 | Scud; cirrous clouds; occasional showers1 |
| 10 | 605 | 56·4 | 54·1 | 2·3 | 1·6 | 0·5 | 18 | 20 : — : — | 10·0 | Id.; id. rain1 |
| 11 | 554 | 54·2 | 52·2 | 2·0 | 1·4 | 1·3 | 19 | | 10·0 | Id.; wild-looking sky; showers1·5 since 10h. |
| 12 | 525 | 54·5 | 52·3 | 2·2 | 2·3 | 1·3 | 22 | 22 : — : — | 9·5 | Id.; a few stars visible in zenith. |
| 13 | 29·497 | 54·9 | 53·2 | 1·7 | 2·3 | 2·2 | 20 | | 10·0 | Scud; rain1 commencing. |
| 14 | 486 | 55·0 | 53·0 | 2·0 | 3·0 | 1·2 | 20 | | 10·0 | Id.; fair. |
| 15 | 469 | 54·9 | 53·9 | 1·0 | 2·2 | 1·0 | 20 | 22 : — : — | 10·0 | Id. |
| 16 | 438 | 55·0 | 53·7 | 1·3 | 1·5 | 0·9 | 20 | 21 : — : — | 10·0 | Id.; cirri, tinged with red to E. |
| 17 | 415 | 56·8 | 54·0 | 2·8 | 1·6 | 1·0 | 20 | 21 : — : — | 10·0 | Id., moving rapidly. |
| 18 | 408 | 56·2 | 54·7 | 1·5 | 2·2 | 1·2 | 19 | 21 : — : — | 10·0 | Id., id. |
| 19 | 410 | 57·0 | 56·0 | 1·0 | 1·6 | 1·5 | 19 | 20 : — : — | 10·0 | Loose scud. |
| 20 | 390 | 62·1 | 59·1 | 3·0 | 2·6 | 1·7 | 19 | 20 : 22 : — | 9·0 | Id.; woolly cirro-cumuli. |
| 21 | 372 | 63·2 | 60·5 | 2·7 | 2·8 | 1·7 | 19 | 22 : — : — | 9·8 | Scud; a few drops of rain. |
| 22 | 359 | 61·6 | 60·3 | 0·3 | 3·5 | 2·7 | 19 | | 10·0 | Id.; cirro-strati, cirro-cumuli; light rain. |
| 23 | 343 | 63·9 | 61·0 | 2·9 | 3·1 | 1·7 | 19 | 21 : — : — | 10·0 | Id. |
| 13 0 | 331 | 68·1 | 61·9 | 6·2 | 4·2 | 4·3 | 20 | 22 : — : — | 7·0 | Scud and loose cumuli; patches of cirri. |
| 1 | 342 | 62·0 | 59·3 | 2·7 | 3·3 | 2·3 | 20 | 22 : — : — | 8·5 | Id.; rain3–6 since 0h. |
| 2 | 333 | 67·8 | 59·1 | 8·7 | 4·4 | 4·0 | 21 | 22 : — : — | 3·5 | Loose cumuli. |
| 3 | 339 | 64·7 | 57·5 | 7·2 | 4·1 | 2·6 | 21 | 22 : — : — | 3·0 | Scud and cumuli; cirrous-crowned clouds to NW. |
| 4 | 371 | 61·4 | 56·2 | 5·2 | 5·5 | 3·9 | 21 | 24 : — : — | 2·5 | Id. |
| 5 | 387 | 61·0 | 54·9 | 6·1 | 4·2 | 2·9 | 22 | 24 : — : — | 3·0 | Ranges of cumuli and scud. |
| 6 | 392 | 59·8 | 53·7 | 6·1 | 4·8 | 2·2 | 25 | | 2·0 | Scud and loose cumuli on horizon. |
| 7 | 410 | 57·7 | 51·7 | 6·0 | 3·7 | 1·6 | 20 | 24 : — : — | 1·5 | Scud and loose cumuli. |
| 8 | 422 | 56·5 | 50·9 | 5·6 | 3·5 | 1·1 | 21 | 24 : — : — | 8·0 | Id.; cirro-strati. [8½h. |
| 9 | 411 | 53·0 | 49·7 | 3·3 | 2·0 | 1·3 | 20 | | 1·0 | Scud on hor.; two light showers since 8h; rainbow at |
| 10 | 418 | 53·7 | 50·0 | 3·7 | 2·4 | 0·6 | 20 | 24 : — : — | 8·0 | Scud; rain. |
| 11 | 413 | 53·0 | 49·7 | 3·3 | 1·2 | 1·0 | 20 | | 9·0 | Id.; a few drops of rain. |
| 12 | 410 | 53·1 | 49·8 | 3·3 | 3·5 | 1·2 | 20 | 24 : — : — | 8·0 | Id.; wind in gusts. |
| 13 | 29·397 | 53·6 | 49·8 | 3·8 | 2·6 | 1·5 | 22 | 24 : — : — | 9·5 | Scud; wind in gusts. |
| 14 | 404 | 52·4 | 49·1 | 3·3 | 3·0 | 1·3 | 20 | 24 : — : — | 2·0 | Id.; id.; sky orange-coloured to E. at 14½h. |
| 15 | 403 | 52·0 | 49·6 | 2·4 | 3·1 | 2·8 | 20 | 24 : — : — | 7·5 | Id. |
| 16 | 401 | 52·3 | 49·3 | 3·0 | 2·4 | 2·7 | 20 | 24 : — : — | 6·0 | Id. |
| 17 | 410 | 52·7 | 49·0 | 3·7 | 3·0 | 4·0 | 20 | 24 : — : — | 5·0 | Id. |
| 18 | 416 | 53·4 | 49·7 | 3·7 | 2·8 | 3·3 | 20 | 24 : — : — | 7·0 | Id. |
| 19 | 427 | 54·3 | 50·4 | 3·9 | 3·2 | 2·0 | 21 | 24 : — : — | 9·0 | Id. |
| 20 | 447 | 56·0 | 51·3 | 4·7 | 2·9 | 4·8 | 23 | 24 : — : — | 9·0 | Scud and loose cumuli. |

The direction of the wind is indicated by the number of the point of the compass, reckoning N. = 0, E. = 8, S. = 16, W. = 24. The motions of the three strata of clouds, Sc. (scud), C.-s. (cirro-stratus), and Cir. (cirrus), are indicated in a similar manner.

| Gött. Mean Time. | Barometer at 32°. | Thermometers. Dry. | Wet. | Diff. | Wind. Maximum force in 1h. | 10m. | From | Clouds, Sc. : C.-s. : Ci., moving from | Sky clouded. | Species of Clouds and Meteorological Remarks. |
|---|---|---|---|---|---|---|---|---|---|---|
| d. h. | in. | ° | ° | ° | lbs. | lbs. | pt. | pt. pt. pt. | 0—10. | |
| 13 21 | 29·464 | 57·0 | 51·6 | 5·4 | 5·2 | 5·9 | 24 | 24 : — : — | 7·0 | Scud and loose cumuli ; patches of cir.-str. and cirri. |
| 22 | 465 | 57·9 | 52·9 | 5·0 | 6·4 | 4·4 | 24 | | 9·0 | Id. |
| 23 | 475 | 58·1 | 53·0 | 5·1 | 4·8 | 3·8 | 23 | 24 : — : — | 9·6 | Scud. |
| 14 0 | 498 | 59·2 | 53·2 | 6·0 | 4·7 | 3·5 | 23 | 25 : — : — | 7·5 | Id. ; cirri |
| 1 | 510 | 61·3 | 54·4 | 6·9 | 5·3 | 3·9 | 25 | 24 : 25 : — | 9·0 | Scud in two currents. |
| 2 | 522 | 59·4 | 54·2 | 5·2 | 5·4 | 3·3 | 26 | 25 : — : — | 2·5 | Scud and loose cumuli ; cirro-strati to S. |
| 3 | 528 | 58·3 | 53·1 | 5·2 | 4·5 | 3·1 | 26 | | 5·5 | Id. |
| 4 | 552 | 58·2 | 55·2 | 3·0 | 3·8 | 2·1 | 24 | | 8·5 | Id. ; drops of rain. |
| 5 | 560 | 56·7 | 51·9 | 4·8 | 3·3 | 1·6 | 26 | | 9·8 | Scud ; rain[1] |
| 6 | 568 | 57·0 | 52·0 | 5·0 | 3·1 | 1·2 | 25 | 25 : — : — | 9·8 | Scud and loose cumuli ; rainbow to E. |
| 7 | 581 | 54·0 | 50·5 | 3·5 | 2·2 | 0·3 | 25 | | 10·0 | Id. ; showers ; rainbow. |
| 8 | 573 | 52·1 | 49·7 | 2·4 | 1·2 | 1·0 | 23 | 25 : — : — | 9·5 | Thin scud ; very dense to E. and W. ; rain[1] ; rainbow. |
| 9 | 568 | 52·3 | 48·1 | 4·2 | 1·8 | 0·5 | 22 | 25 : — : — | 9·5 | Scud ; raining to E. ; passing showers. |
| 10 | 569 | 52·0 | 47·0 | 5·0 | 1·7 | 0·4 | 24 | 24 : — : — | 9·9 | Id. ; cirro-strati to N. ; showers since 9h. |
| 11 | 550 | 50·7 | 47·3 | 3·4 | 1·9 | 0·4 | 23 | | 7·0 | Id. ; cirro-strati above. |
| 12 | 550 | 50·7 | 47·1 | 3·6 | 1·4 | 1·1 | 22 | | 9·9 | Thick scud. |
| 13 | 29·527 | 51·3 | 47·7 | 3·6 | 1·8 | 1·5 | 24 | | 9·0 | Thick scud ; cirro-strati on horizon. |
| 14 | 526 | 50·0 | 46·8 | 3·2 | 2·8 | 1·4 | 21 | 26 : — : — | 4·0 | Scud ; cirro-strati. |
| 15 | 517 | 49·4 | 46·3 | 3·1 | 1·7 | 1·4 | 22 | 25 : — : — | 1·5 | Loose scud ; cirro-strati and woolly cirri. |
| 16 | ..... | ... | ... | ... | ... | ... | | | ..... | |
| 17 | 533 | 50·9 | 47·6 | 2·3 | 2·0 | 2·1 | 22 | 26 : — : — | 3·0 | Loose scud ; cirro-strati on horizon. |
| 18 | 533 | 51·1 | 47·8 | 3·3 | 3·2 | 1·8 | 23 | 26 : — : — | 2·0 | Id. ; id. |
| 19 | 537 | 53·0 | 49·0 | 4·0 | 3·3 | 3·5 | 26 | 26 : — : 28 | 2·0 | Id. ; mottled cirri ; cirro-strati on horizon. |
| 20 | 555 | 54·8 | 50·1 | 4·7 | 2·6 | 2·0 | 26 | 26 : — : 28 | 5·0 | Id. ; id. id. |
| 21 | 577 | 57·0 | 52·4 | 4·6 | 4·5 | 1·5 | 24 | 26 : — : 30 | 9·0 | Id. ; woolly cirri ; cirro-strati to W. |
| 22 | 598 | 55·8 | 50·2 | 5·6 | 2·3 | 2·0 | 25 | 26 : — : — | 9·8 | Scud ; cirri and cirro-strati. |
| 23 | 617 | 56·2 | 51·1 | 5·1 | 2·3 | 2·1 | 24 | 26 : — : — | 9·9 | Id. ; id. |
| 15 0 | 635 | 56·0 | 50·9 | 5·1 | 3·1 | 0·5 | 26 | 26 : — : — | 9·8 | Id. ; id. |
| 1 | 659 | 56·2 | 51·0 | 5·2 | 1·5 | 1·2 | 25 | 28 : — : — | 9·9 | Id. ; cirri, cirro-strati, and cirrous haze. |
| 2 | 666 | 56·7 | 51·2 | 5·5 | 1·8 | 1·3 | 25 | | 9·9 | Id. ; id. |
| 3 | 673 | 57·8 | 52·1 | 5·7 | 2·6 | 2·3 | 25 | 28 : — : — | 9·9 | Id. ; cumuli, cirri, and cirro-strati. |
| 4 | 696 | 56·2 | 50·7 | 5·5 | 2·3 | 0·9 | 26 | 27 : 26 : — | 9·8 | Patches of scud ; cirro-strati and cirrous clouds. |
| 5 | 701 | 58·3 | 51·9 | 6·4 | 1·7 | 2·0 | 27 | | 8·5 | Id. ; id. |
| 6 | 715 | 57·8 | 51·7 | 6·1 | 1·4 | 0·7 | 26 | 28 : 28 : — | 9·0 | Id. ; cir.-str., cir.-cum., and cirri moving very slowly. |
| 7 | 731 | 56·3 | 51·3 | 5·0 | 1·3 | 0·3 | 25 | 28 : 28 : — | 8·0 | Id. ; id. |
| 8 | 742 | 53·8 | 49·0 | 4·8 | 1·0 | 1·0 | 25 | 28 : 28 : — | 6·0 | Id. ; id. |
| 9 | 754 | 51·5 | 47·4 | 4·1 | 0·8 | 0·5 | 26 | | 3·5 | Id. ; id. |
| 10 | 768 | 50·0 | 46·6 | 3·4 | 0·3 | 0·3 | 27 | — : 31 : — | 4·0 | Cirro-cumulous scud. |
| 11 | 772 | 48·0 | 45·0 | 3·0 | 0·2 | 0·1 | 28 | | 5·0 | Cirro-strati ; dense clouds to E. |
| 12 | 788 | 46·0 | 44·0 | 2·0 | 0·2 | 0·1 | 24 | | 1·0 | Streaks of cirri to NE. very light, as if illuminated by the Sun. |
| 23 | 29·927 | ... | ... | ... | 0·7 | ... | 30 | | | |
| 16 7½ | ..... | ... | ... | ... | 0·0 | 0·0 | 4 | 21 : — : — | ..... | Scud. |
| 13 | 29·950 | 42·3 | 41·0 | 1·3 | 0·4 | 0·0 | | | 2·0 | Cirri to NNE., tinged with red ; scud ; cirro-strati. |
| 14 | 940 | 41·7 | 40·8 | 0·9 | 0·0 | 0·0 | 18 | | 0·8 | As before. |
| 15 | 926 | 37·0 | 37·0 | ... | 0·0 | 0·0 | 18 | | 0·5 | Id. ; heavy dew. |
| 16 | 926 | 37·8 | 37·3 | 0·5 | 0·0 | 0·0 | | — : 22 : — | 7·0 | Woolly cir.-cum. moving slowly ; cirri, cirro-strati, all tinged with red. |
| 17 | 906 | 41·2 | 40·6 | 0·6 | 0·0 | 0·0 | 16 | — : 22 : — | 8·0 | Large loose cirro-cumuli moving very slowly. |
| 18 | 924 | 44·7 | 43·0 | 1·7 | 0·0 | 0·0 | | | 9·0 | Cirro-cumulo-strati, lying in bands SW. to NE. ; cirri. |
| 19 | 919 | 48·2 | 46·3 | 1·9 | 0·0 | 0·0 | | 20 : — : — | 9·5 | Loose cirro-cumulous scud ; linear cirri, cirro-strati. |
| 20 | 909 | 52·7 | 49·3 | 3·4 | 0·0 | 0·0 | | — : 23 : — | 9·5 | Large cirro-cumuli ; cirri and cirro-strati. |
| 21 | 896 | 56·9 | 51·0 | 5·9 | 0·0 | 0·0 | | — : — : 24 | 9·5 | Woolly cirri, cir. haze, cir.-str. ; masses of cum. to N. and S. |
| 22 | 878 | 58·6 | 53·1 | 5·5 | 0·1 | 0·0 | | | 9·8 | Cirrous haze ; cumuli and cirro-strati on horizon. |
| 23 | 868 | 60·3 | 53·3 | 7·0 | 0·1 | 0·0 | | 22 : — : — | 10·0 | Scud ; cumuli, cirro-strati, cirrous haze ; rain[1] |
| 17 0 | 854 | 60·3 | 54·9 | 5·4 | 0·1 | 0·0 | | 18 : — : — | 10·0 | Masses of scud ; cir.-str. and cir. haze ; drops of rain. |
| 1 | 844 | 60·2 | 55·7 | 4·5 | 0·0 | 0·0 | 17 | | 10·0 | As before ; rain[1] since 0h. |

The direction of the wind is indicated by the number of the point of the compass, reckoning N. = 0, E. = 8, S. = 16, W. = 24. The motions of the three strata of clouds, Sc. (scud), C.-s. (cirro-stratus), and Cir. (cirrus), are indicated in a similar manner.

June 14d 0h. Observation made at 0h 5m.

June 14d 11h. The index of the anemometer was found to have become shifted, so as to register the pressures 0·4 lb. too little ; it was now adjusted.

| Gött. Mean Time. | | Barometer at 32°. | Thermometers. | | | Wind. | | | Clouds, Sc.: C.-s.: Ci., moving from | Sky clouded. | Species of Clouds and Meteorological Remarks. |
|---|---|---|---|---|---|---|---|---|---|---|---|
| | | | Dry. | Wet. | Diff. | Maximum force in 1h. | Maximum force in 10m. | From | | | |
| d. | h. | in. | ° | ° | ° | lbs. | lbs. | pt. | pt. pt. pt. | 0—10. | |
| 17 | 2 | 29·833 | 57·9 | 54·0 | 3·9 | 0·0 | 0·0 | 23 | 18 : — : — | 10·0 | Scud; rain$^{0\cdot5}$ [rain$^{2}$ |
| | 3 | 820 | 57·7 | 56·0 | 1·7 | 0·1 | 0·0 | 24 | 18 : — : — | 10·0 | Loose scud moving slowly; dense uniform cirro-strati; |
| | 4 | 804 | 56·8 | 54·7 | 2·1 | 0·0 | 0·0 | | | 10·0 | Continuous rain$^{2}$ |
| | 5 | 796 | 55·3 | 54·0 | 1·3 | 0·0 | 0·0 | | 17 : — : — | 10·0 | Scud; rain$^{2-3}$ |
| | 6 | 783 | 53·5 | 52·8 | 0·7 | 0·0 | 0·0 | | 16 : 15 : — | 10·0 | Scud in two currents; rain$^{2}$ |
| | 7 | 759 | 52·1 | 51·9 | 0·2 | 0·0 | 0·0 | | 6 : 12 : — | 10·0 | Low smoky scud; thicker scud; rain$^{3-5}$ |
| | 8 | 754 | 51·7 | 51·2 | 0·5 | 0·1 | 0·0 | 6 | 12 : — : — | 10·0 | Scud; rain$^{2-3}$ |
| | 9 | 739 | 50·1 | 49·3 | 0·8 | 0·2 | 0·0 | 12 | 14 : — : — | 10·0 | Id.; id. |
| | 10 | 728 | 49·3 | 48·9 | 0·4 | 0·2 | 0·0 | 6 | 14 : — : — | 10·0 | Id.; id. |
| | 11 | 720 | 49·3 | 49·0 | 0·3 | 0·1 | 0·0 | | | 10·0 | Id.; id. |
| | 12 | 708 | 49·2 | 48·9 | 0·3 | 0·0 | 0·0 | | | 10·0 | Rain$^{2-3}$ |
| | 13 | 29·680 | 48·9 | 48·7 | 0·2 | 0·0 | 0·0 | | | 10·0 | Rain$^{2-3}$ |
| | 14 | 661 | 49·0 | 48·7 | 0·3 | 0·1 | 0·0 | 8 | | 10·0 | Rain$^{1}$ |
| | 15 | 642 | 49·0 | 48·6 | 0·4 | 0·0 | 0·0 | | | 10·0 | Id. |
| | 16 | 632 | 48·8 | 48·6 | 0·2 | 0·0 | 0·0 | 6 | 6 : — : — | 10·0 | Scud; rain$^{2}$ |
| | 17 | 617 | 49·2 | 49·0 | 0·2 | 0·1 | 0·0 | | 6 : — : — | 10·0 | Id.; rain$^{1}$ |
| | 18 | 607 | 49·8 | 49·5 | 0·3 | 0·0 | 0·0 | | 4 : — : — | 10·0 | Id.; rain$^{0\cdot2}$ |
| | 19 | 597 | 50·7 | 50·5 | 0·2 | 0·0 | 0·0 | | 4 : — : — | 10·0 | Id.; id. |
| | 20 | 588 | 51·6 | 50·7 | 0·9 | 0·1 | 0·0 | 4 | 6 : 20 : 16 | 10·0 | Id. in two currents; woolly cirri. |
| | 21 | 583 | 55·2 | 53·2 | 2·0 | 0·1 | 0·0 | | | 10·0 | Id.; dense mass of cirro-strati. |
| | 22 | 577 | 55·7 | 52·8 | 2·9 | 0·0 | 0·0 | | | 10·0 | Id.; rain$^{0\cdot2}$ |
| | 23 | 573 | 54·8 | 52·9 | 1·9 | 0·0 | 0·0 | 8 | 12 : — : — | 10·0 | Id.; cirrous clouds; rain$^{1}$ |
| 18 | 0 | 577 | 55·1 | 53·6 | 1·5 | 0·0 | 0·0 | | 4 : — : — | 10·0 | Id.; cirri and cirro-strati; rain$^{0\cdot5}$ |
| | 1 | 581 | 54·7 | 52·7 | 2·0 | 0·2 | 0·0 | 15 | 12 : — : — | 10·0 | Id.; continuous rain$^{2}$ |
| | 2 | 574 | 54·0 | 51·7 | 2·3 | ... | ... | | 12 : — : — | 10·0 | Id.; rain$^{0\cdot5-2}$ |
| | 3 | 570 | 51·5 | 51·3 | 0·2 | ... | ... | | | 10·0 | Id. moving very slowly. |
| | 4 | 563 | 53·3 | 51·8 | 1·5 | ... | ... | | | 10·0 | Id., the motion not perceptible; rain$^{2-4}$ |
| | 5 | 558 | 54·1 | 53·3 | 0·8 | ... | ... | | 10 : 12 : — | 10·0 | Id. in two currents. |
| | 6 | 562 | 51·7 | 51·4 | 0·3 | ... | ... | | 12 : — : — | 10·0 | Id.; rain$^{3}$ |
| | 7 | 568 | 51·7 | 51·4 | 0·3 | ... | ... | | 12 : — : — | 10·0 | Id.; rain$^{2}$ |
| | 8 | 572 | 51·7 | 51·2 | 0·5 | ... | ... | | 12 : — : — | 10·0 | Id.; rain$^{1}$ |
| | 9 | 582 | 51·3 | 50·6 | 0·7 | ... | ... | | | 10·0 | Id.; rain ceased. |
| | 10 | 601 | 50·1 | 49·8 | 0·3 | ... | ... | | | 10·0 | Id.; rain$^{1}$ |
| | 11 | 606 | 49·5 | 49·2 | 0·3 | ... | ... | | | 10·0 | Id.; id. |
| | 12 | 618 | 49·5 | 49·1 | 0·4 | ... | ... | | | 10·0 | Id.; id. |
| | 13 | 29·626 | 49·0 | 48·8 | 0·2 | ... | ... | | | 10·0 | Scud; rain$^{1}$ |
| | 14 | 622 | 48·8 | 48·2 | 0·6 | ... | ... | | | 10·0 | Id.; id. |
| | 15 | 633 | 48·3 | 47·9 | 0·4 | ... | ... | | | 10·0 | Id.; id. |
| | 16 | 648 | 48·2 | 47·7 | 0·5 | ... | ... | | 6 : — : — | 10·0 | Id.; id. |
| | 17 | 663 | 47·2 | 46·8 | 0·4 | ... | ... | | | 10·0 | Id.; rain$^{0\cdot5}$ |
| | 18 | 676 | 46·7 | 46·2 | 0·5 | ... | ... | | 3 : — : — | 10·0 | Id.; fair. |
| | 19 | 687 | 48·0 | 47·0 | 1·0 | 0·2 | 0·2 | 3 | 3 : — : — | 10·0 | Loose scud; thick cirro-strati. |
| | 20 | 692 | 48·9 | 47·4 | 1·5 | 0·2 | 0·2 | 2 | 3 : — : — | 10·0 | Id.; id. |
| | 21 | 707 | 49·0 | 47·0 | 2·0 | 0·3 | 0·3 | 2 | 2 : — : — | 10·0 | Id.; id. |
| | 22 | 711 | 50·6 | 47·3 | 3·3 | 0·2 | 2·2 | 2 | 2 : 2 : — | 10·0 | Id.; cirro-strati. |
| | 23 | 718 | 52·7 | 48·7 | 4·0 | 0·4 | 0·2 | 1 | 1 : — : — | 10·0 | Id.; id. |
| 19 | 0 | 718 | 52·4 | 48·0 | 4·4 | 0·2 | 0·2 | 2 | 1 : — : — | 10·0 | Scud; a few drops of rain. |
| | 1 | 723 | 52·6 | 48·7 | 3·9 | 0·1 | 0·1 | 2 | 1 : — : — | 10·0 | Id.; id. |
| | 2 | 724 | 56·0 | 54·0 | 2·0 | 0·1 | 0·1 | 12 | 29 : 28 : — | 9·7 | Loose scud; woolly cir.-cum.-str.; shower since 1h. |
| | 3 | 724 | 50·1 | 48·7 | 1·4 | 0·2 | 0·2 | 2 | 2 : 26 : — | 10·0 | Id.; thicker scud; slight shower. |
| | 4 | 730 | 49·0 | 48·6 | 0·4 | 0·1 | 0·1 | 3 | | 10·0 | Rain$^{3}$ |
| | 5 | 711 | 50·6 | 48·7 | 1·9 | 0·0 | 0·0 | | 6 : 26 : — | 10·0 | Loose scud moving variously; thicker scud; rain$^{2}$ |
| | 6 | 708 | 53·0 | 52·1 | 0·9 | 0·0 | 0·0 | | 27 : — : — | 9·0 | Scud; cirro-strati and cumuli on E. horizon. |
| | 7 | 710 | 51·9 | 50·0 | 1·9 | 0·0 | 0·0 | | | 10·0 | Id.; shower since last observation. |
| | 8 | 707 | 51·0 | 50·3 | 0·7 | 0·0 | 0·0 | | | 10·0 | Id.; rain$^{2}$ |
| | 9 | 723 | 50·3 | 49·5 | 0·8 | 0·0 | 0·0 | | | 10·0 | Id.; id. |

The direction of the wind is indicated by the number of the point of the compass, reckoning N. = 0, E. = 8, S. = 16, W. = 24. The motions of the three strata of clouds, Sc. (scud), C.-s. (cirro-stratus), and Cir. (cirrus), are indicated in a similar manner.

June 17d 17h. Observation made at 17h 15m.

June 18d 2h. The suspension cord of the inverted vessel of the anemometer broken; readjusted at 19d 8h; the pressures from 18d 19h till 19d 8h are estimated.

| Gött. Mean Time. | | Barometer at 32°. | Thermometers. | | | Wind. | | | Clouds, Sc. : C.-s. : Ci., moving from | Sky clouded. | Species of Clouds and Meteorological Remarks. |
|---|---|---|---|---|---|---|---|---|---|---|---|
| | | | Dry. | Wet. | Diff. | Maximum force in 1h. | Maximum force in 10m. | From | | | |
| d. | h. | in. | ° | ° | ° | lbs. | lbs. | pt. | pt. pt. pt. | 0—10. | |
| 19 | 10 | 29·711 | 47·5 | 47·2 | 0·3 | 0·0 | 0·0 | | 28 : — : — | 10·0 | Scud ; rain[1] |
| | 11 | 713 | 47·9 | 47·4 | 0·5 | 0·0 | 0·0 | | 30 : — : — | 9·7 | Id. |
| | 12 | 710 | 46·0 | 45·9 | 0·1 | 0·1 | 0·0 | | | 5·0 | Id. ; cumuli to N. ; sky very clear. |
| | 13 | 29·711 | 44·0 | 43·8 | 0·2 | 0·0 | 0·0 | | | 3·0 | Scud ; heavy dew. |
| | 14 | 717 | 41·9 | 41·9 | ... | 0·0 | 0·0 | | | 2·0 | Id. ; very clear towards the zenith. |
| | 15 | 717 | 40·9 | 40·7 | 0·2 | 0·0 | 0·0 | | | 6·0 | Scud. |
| | 16 | 697 | 41·9 | 41·3 | 0·6 | 0·0 | 0·0 | | | 3·0 | Id. |
| | 17 | 694 | 40·8 | 40·2 | 0·6 | 0·0 | 0·0 | 20 | 20 : — : — | 0·8 | Patches of scud ; cumuli and cirro-strati to E. |
| | 18 | 687 | 43·7 | 42·4 | 1·3 | 0·0 | 0·0 | 22 | 20 : — : — | 0·5 | Scud ; cirri and cirro-strati. |
| | 19 | 680 | 46·9 | 44·4 | 2·5 | 0·3 | 0·4 | 22 | 24 : — : — | 0·3 | Id. ; cirri to E. ; wind commencing. |
| | 20 | 672 | 49·7 | 45·9 | 3·8 | 1·0 | 0·6 | 22 | 25 : — : — | 0·8 | Id. ; cirri to S. |
| | 21 | 672 | 51·7 | 46·4 | 5·3 | 0·7 | 0·4 | | | 2·5 | Id. ; sky milky to E. |
| | 22 | 649 | 53·6 | 47·1 | 6·5 | 0·5 | 0·2 | 25 | | 2·0 | Cirri to N. and W. ; loose cumuli on horizon. |
| | 23 | 636 | 55·9 | 48·8 | 7·1 | 0·3 | 0·1 | 24 | 23 : — : 24 | 3·0 | Thin scud ; woolly cirri ; loose cumuli on horizon. |
| 20 | 0 | 627 | 58·4 | 51·3 | 7·1 | 0·3 | 0·1 | 28 | 23 : — : — | 6·0 | Scud and loose cumuli ; cirri and cirrous haze. |
| | 1 | 619 | 62·6 | 55·0 | 7·6 | 0·5 | 0·2 | 16 | 22 : — : — | 9·0 | Scud ; cirro-strati and cirrous haze. |
| | 2 | 613 | 60·1 | 54·0 | 6·1 | 0·7 | 0·4 | 20 | | 10·0 | Masses of scud ; dense mass of cir.-str. ; drops of rain. |
| | 3 | 603 | 58·7 | 54·7 | 4·0 | 0·6 | 0·1 | 20 | | 10·0 | Id. ; id. ; rain[2] |
| | 4 | 589 | 58·2 | 54·7 | 3·5 | 0·2 | 0·1 | 20 | | 10·0 | Id. ; id. |
| | 5 | 583 | 58·8 | 53·6 | 5·2 | 0·2 | 0·0 | | | 10·0 | Scud and cirro-strati ; drops of rain. |
| | 6 | 569 | 56·9 | 54·2 | 2·7 | 0·2 | 0·1 | | | 10·0 | Id. ; rain[0·2] |
| | 7 | 570 | 55·8 | 54·1 | 1·7 | 0·1 | 0·0 | | | 10·0 | Id. ; id. |
| | 8 | 569 | 55·7 | 53·9 | 1·8 | 0·1 | 0·0 | 18 | | 10·0 | A nearly uniform mass of scud. |
| | 9 | 562 | 55·7 | 54·0 | 1·7 | 0·0 | 0·0 | | 21 : — : — | 9·5 | Loose scud ; cirro-cumuli and cirrous clouds. |
| | 10 | 555 | 54·8 | 53·7 | 1·1 | 0·0 | 0·0 | 20 | 23 : — : — | 9·5 | Cirro-cumulous scud ; cirri above. |
| | 11 | 542 | 54·2 | 53·3 | 0·9 | 0·0 | 0·0 | | | 9·7 | Scud ; cirro-cumuli and cirro-strati. |
| | 12 | 522 | 54·2 | 53·7 | 0·5 | 0·0 | 0·0 | | | 10·0 | Thick clouds ; at 12h 10m rain[2] |
| | 13 | 29·508 | 54·9 | 54·2 | 0·7 | 0·0 | 0·0 | | | 10·0 | Rain[2] |
| | 14 | 491 | 54·3 | 53·8 | 0·5 | 0·0 | 0·0 | | | 10·0 | Rain[3] |
| | 15 | 485 | 54·4 | 54·1 | 0·3 | 0·0 | 0·0 | | | 10·0 | Rain[0·2-0] |
| | 16 | 503 | 53·8 | 53·7 | 0·1 | 0·0 | 0·0 | 20 | 22 : — : — | 10·0 | Scud. [SE. |
| | 17 | 512 | 53·2 | 53·0 | 0·2 | 0·0 | 0·0 | | 23 : — : — | 2·5 | Loose scud ; cir.-cum.-str., cir.-str. ; low misty scud to |
| | 18 | 514 | 54·4 | 53·8 | 0·6 | 0·2 | 0·0 | 24 | 22 : — : — | 3·0 | Loose cir.-cum. scud ; loose cum. and cir.-str. on hor. |
| | 19 | 527 | 56·8 | 54·5 | 2·3 | 0·3 | 0·0 | 28 | 22 : — : — | 8·5 | Loose scud ; cirro-cumulo-strati ; linear cirri. |
| | 20 | 522 | 59·0 | 55·3 | 3·7 | 0·3 | 0·1 | 28 | 22 : 20 : — | 8·0 | Id. ; id. |
| | 21 | 531 | 57·0 | 56·0 | 1·0 | 0·3 | 0·3 | 23 | 23 : — : — | 9·9 | Scud ; cirro-strati and cumuli to N. ; rain[1] |
| | 22 | 540 | 61·1 | 58·0 | 3·1 | 0·4 | 0·3 | 19 | | 9·9 | Cirri and cirro-strati ; cirrous haze ; rain[0·2] |
| | 23 | 537 | 59·3 | 57·3 | 2·0 | 0·4 | 0·4 | 21 | | 10·0 | Cirro-strati over the sky ; scud and loose cum. on hor. |
| 21 | 0 | 533 | 63·8 | 59·3 | 4·5 | 0·5 | 0·4 | 18 | 22 : — : — | 9·0 | Scud ; woolly cirri. |
| | 1 | 524 | 61·2 | 59·8 | 1·4 | 0·9 | 0·2 | 20 | | 9·9 | Id. ; id. ; rain[1] since 0h. [looking. |
| | 2 | 518 | 65·3 | 60·0 | 5·3 | 1·1 | 0·5 | 19 | 22 : — : 22 | 9·2 | Scud and cumuli ; thick mottled woolly cirri ; stormy- |
| | 3 | 506 | 63·9 | 58·3 | 5·6 | 1·3 | 0·8 | 19 | 21 : — : — | 9·0 | Id. ; thick cirro-strati above. |
| | 4 | 502 | 64·4 | 58·7 | 5·7 | 1·1 | 1·1 | 19 | 21 : 21 : — | 9·0 | Id. ; cirro-cumulo-strati, cirrous haze. |
| | 5 | 495 | 63·0 | 57·3 | 5·7 | 1·7 | 0·8 | 19 | | 9·5 | Thick cirro-strati and haze ; patches of scud. |
| | 6 | 484 | 62·2 | 56·0 | 6·2 | 1·2 | 0·5 | 18 | 21 : — : — | 10·0 | Id., thicker ; patches of scud. |
| | 7 | 482 | 59·7 | 56·0 | 3·7 | 1·0 | 1·5 | 18 | 20 : — : — | 10·0 | Scud ; thick cirro-strati and cirrous haze ; rain[0·2] |
| | 8 | 477 | 56·0 | 53·0 | 3·0 | 0·8 | 0·3 | 19 | 20 : — : — | 10·0 | Id. ; id. |
| | 9 | 472 | 54·1 | 52·4 | 1·7 | 0·6 | 0·1 | 20 | 19 : — : — | 10·0 | Loose scud ; dense cirro-strati ; rain[1] |
| | 10 | 455 | 53·8 | 52·8 | 1·0 | 0·1 | 0·0 | | 20 : — : — | 9·8 | Id. ; id. |
| | 11 | 446 | 52·3 | 51·1 | 1·2 | 0·1 | 0·0 | | — : 22 : — | 6·0 | Cirro-cumuli ; scud, cirro strati, ragged-edged cumuli. |
| | 12 | 437 | 51·9 | 49·8 | 2·1 | 0·5 | 0·2 | 18 | 22 : 24 : — | 4·0 | Thin scud ; thick scud, moving rapidly. |
| | 13 | 29·420 | 50·9 | 49·7 | 1·2 | 0·1 | 0·0 | | | 9·9 | Scud ; a band of light on S. and E. horizon. |
| | 14 | 410 | 52·4 | 51·1 | 1·3 | 1·2 | 0·3 | | 20 : — : — | 9·0 | Id. |
| | 15 | 401 | 52·2 | 51·2 | 1·0 | 0·6 | 0·1 | 17 | 20 : — : — | 8·5 | Id. ; cirri, cirro-strati, and cirrous haze. [with red. |
| | 16 | 399 | 52·9 | 52·0 | 0·9 | 0·4 | 0·0 | | 20 : — : 21 | 8·0 | Id. ; fine woolly cirri ; cir.-str. ; cirri to E., tinged |

The direction of the wind is indicated by the number of the point of the compass, reckoning N. = 0, E. = 8, S. = 16, W. = 24. The motions of the three strata of clouds, Sc. (scud), C.-s. (cirro-stratus), and Cir. (cirrus), are indicated in a similar manner.

June 21d 11h. The observer conceived that he heard thunder at this time: it was afterwards ascertained that a thunder storm occurred on this night about 10 miles to ESE. of Makerstoun.

| Gött. Mean Time. | | Barometer at 32°. | Thermometers. | | | Wind. | | | Clouds, Sc. : C.-s. : Ci., moving from | Sky clouded. | Species of Clouds and Meteorological Remarks. |
|---|---|---|---|---|---|---|---|---|---|---|---|
| | | | Dry. | Wet. | Diff. | Maximum force in 1h. | Maximum force in 10m. | From | | | |
| d. | h. | in. | ° | ° | ° | lbs. | lbs. | pt. | pt. pt. pt. | 0—10. | |
| 21 | 17 | 29·398 | 54·9 | 53·5 | 1·4 | 0·4 | 0·1 | | 20 : — : 21 | 9·0 | Scud; woolly cirri; dense mass of clouds to N. and E.; |
| | 18 | 404 | 55·6 | 53·0 | 2·6 | 0·2 | 0·3 | 18 | 22 : 20 : — | 7·0 | Id.; cir.-cum.-str.; scud and loose cum. [rain$^{2}$ |
| | 19 | 410 | 56·8 | 54·7 | 2·1 | 0·6 | 0·4 | 18 | 20 : — : 20 | 7·0 | Loose scud; woolly and reticulated cirri. |
| | 20 | 414 | 58·0 | 55·1 | 2·9 | 0·6 | 0·3 | 20 | 19 : — : — | 4·0 | Scud and loose cumuli; patches of cirro-strati and cirri. |
| | 21 | 416 | 59·0 | 55·4 | 3·6 | 0·8 | 0·3 | 20 | 19 : — : — | 7·0 | Id.; id. |
| | 22 | 422 | 62·5 | 56·4 | 6·1 | 1·4 | 1·2 | 19 | 20 : — : — | 3·0 | Scud and cumuli; patches of cirri. |
| | 23 | 427 | 63·9 | 57·7 | 6·2 | 1·2 | 0·6 | 19 | 20 : — : — | 7·0 | Id.; cirro-strati. |
| 22 | 0 | 429 | 63·9 | 57·4 | 6·5 | 0·8 | 1·1 | 18 | 22 : — : — | 4·0 | Id.; patches of cirro-strati. |
| | 1 | 436 | 65·1 | 57·8 | 7·3 | 1·0 | 1·0 | 18 | 22 : — : — | 7·0 | Id. |
| | 2 | 445 | 66·7 | 57·6 | 9·1 | 1·4 | 1·2 | 21 | 20 : 22 : — | 6·0 | Id.; cir.-cum.-str.; patches of cirri. |
| | 3 | 445 | 64·7 | 56·2 | 8·5 | 2·2 | 1·8 | 20 | — : — : 22 | 7·0 | Woolly cirri and cir. haze over the sky; scud and cum. |
| | 4 | 450 | 66·0 | 57·8 | 8·2 | 1·8 | 1·6 | 20 | — : — : 22 | 7·0 | Id.; id. |
| | 5 | 452 | 65·2 | 57·0 | 8·2 | 1·4 | 1·0 | 18 | — : — : 21 | 6·0 | Woolly cirri; masses of cumuli; portion of a halo. |
| | 6 | 472 | 62·0 | 55·4 | 6·6 | 1·4 | 1·3 | 19 | — : — : 22 | 6·0 | Id.; cum. to SE. and N.; cirro-strati to E. |
| | 7 | 489 | 61·0 | 55·0 | 6·0 | 1·2 | 1·0 | 21 | — : — : 22 | 6·0 | Varieties of cirri; cirro-strati and cumuli. |
| | 8 | 495 | 59·0 | 54·5 | 4·5 | 0·3 | 0·3 | 20 | — : — : 22 | 5·0 | Woolly cirri; patches of scud. |
| | 9 | 505 | 57·2 | 53·2 | 4·0 | 0·8 | 0·1 | 20 | 21 : — : — | 8·0 | Cirro-stratous scud; woolly cirri and cirro-strati. |
| | 10 | 518 | 55·2 | 52·3 | 2·9 | 0·2 | 0·0 | | | 7·0 | Id.; id. |
| | 11 | 532 | 54·6 | 51·7 | 2·9 | 0·1 | 0·3 | 20 | | 9·0 | Id.; id. |
| | 12 | 534 | 54·9 | 51·0 | 3·9 | 0·1 | 0·0 | 20 | | 9·8 | Cirro-strati. |
| 23 | 0 | 29·533 | 71·7 | 63·7 | 8·0 | 0·9 | ... | 18 | | | |
| | 13 | 29·554 | 57·0 | 56·4 | 0·6 | 0·7 | 0·0 | | | 0·2 | Cirri; cirrous haze on horizon. |
| | 14 | 548 | 55·6 | 55·2 | 0·4 | 0·0 | 0·0 | | | 0·2 | Id.; id. |
| | 15 | 537 | 54·9 | 54·5 | 0·4 | 0·0 | 0·0 | | | 0·2 | Id.; id. |
| | 16 | 531 | 53·0 | 52·8 | 0·2 | 0·0 | 0·0 | | — : 20 : 20 | 6·0 | Woolly cirri, cir.-cum., cir.-str.; cum. in haze to SE. |
| | 17 | 528 | 54·9 | 54·0 | 0·9 | 0·0 | 0·0 | 0 | — : 16 : 16 | 8·0 | Cirri, cirro-strati, cir.-cum.; cum.-str. to SE.; strati on Cheviot. |
| | 18 | 525 | 56·5 | 55·0 | 1·5 | 0·2 | 0·2 | 4 | 4 : 14 : — | 9·7 | Thin scud; thicker scud; cumuli, cum.-str., cir.-str. |
| | 19 | 515 | 58·3 | 56·4 | 1·9 | 0·2 | 0·2 | 2 | 4 : 13 : — | 9·8 | Id.; ragged cum., cum.-str.; cir.-str., cir. haze. |
| | 20 | 512 | 61·2 | 58·9 | 2·3 | 0·2 | 0·1 | 3 | | 9·5 | Nearly as last hour; no scud seen from NE. |
| | 21 | 504 | 64·0 | 61·0 | 3·0 | 0·3 | 0·3 | 2 | — : — : 14 | 8·0 | Woolly cirri; cirro-strati, cumulo-strati, cirrous haze. |
| | 22 | 508 | 62·0 | 60·0 | 2·0 | 0·4 | 0·2 | 3 | 14 : 14 : — | 9·8 | Coralline cumulo-strati, cirro-strati, loose cumuli. |
| | 23 | 500 | 65·8 | 62·2 | 3·6 | 0·3 | 0·1 | 4 | 10 : — : — | 9·5 | Cir.-str. scud; cumuli, cirro-strati; strati on Cheviot. |
| 24 | 0 | 496 | 67·5 | 63·2 | 4·3 | 0·2 | 0·3 | 4 | 10 : — : — | 9·9 | Scud; cirri, cir.-str., cum.; slight shower since 23h. |
| | 1 | 499 | 67·8 | 62·9 | 4·9 | 0·5 | 0·4 | 5 | 10 : — : — | 9·9 | Id.; id.; rain$^{0·5}$ |
| | 2 | 496 | 62·2 | 61·2 | 1·0 | 0·6 | 0·1 | | 10 : — : — | 10·0 | Id.; rain$^{3}$ |
| | 3 | 495 | 61·5 | 60·7 | 0·8 | 0·1 | 0·0 | 5 | 12 : — : — | 10·0 | Id.; thick mass of cirro-strati; rain$^{3-5}$ |
| | 4 | 478 | 59·8 | 59·4 | 0·4 | 0·2 | 0·2 | 2 | 10 : — : — | 10·0 | Id.; rain$^{3}$; rain$^{5-9}$ since 3h. |
| | 5 | 471 | 59·9 | 59·3 | 0·6 | 0·4 | 0·2 | 4 | 4 : 10 : — | 10·0 | Thin smoky scud, moving quickly; scud; rain$^{1-3}$ |
| | 6 | 464 | 59·2 | 58·5 | 0·7 | 0·6 | 0·3 | 3 | 10 : — : — | 10·0 | Scud; cirro-strati not so dense. |
| | 7 | 458 | 58·0 | 57·2 | 0·8 | 0·5 | 0·1 | 6 | | 10·0 | Nearly uniform. |
| | 8 | 463 | 57·0 | 56·4 | 0·6 | 0·4 | 0·4 | 3 | | 10·0 | Id.; misty. |
| | 9 | 476 | 56·2 | 55·8 | 0·4 | 0·3 | 0·0 | 4 | | 10·0 | Id.; id. |
| | 10 | 484 | 56·1 | 55·7 | 0·4 | 0·1 | 0·0 | 4 | | 10·0 | Id. |
| | 11 | 473 | 55·9 | 55·2 | 0·7 | 0·0 | 0·0 | | | 10·0 | Id. |
| | 12 | 472 | 55·3 | 55·0 | 0·3 | 0·1 | 0·0 | | | 10·0 | Id. |
| | 13 | 29·473 | 55·2 | 54·9 | 0·3 | 0·1 | 0·2 | 4 | | 10·0 | Rather dark; no twilight. |
| | 14 | 472 | 54·3 | 54·1 | 0·2 | 0·1 | 0·0 | | | 10·0 | Misty. |
| | 15 | 483 | 53·6 | 53·5 | 0·1 | 0·4 | 0·4 | 3 | | 10·0 | Id. |
| | 16 | 484 | 53·2 | 53·1 | 0·1 | 0·6 | 0·3 | 4 | | 10·0 | Scud; rain$^{1}$ |
| | 17 | 505 | 53·1 | 52·9 | 0·2 | 0·6 | 0·3 | 4 | 6 : — : — | 10·0 | Id. moving rapidly; rain$^{0·5}$ |
| | 18 | 506 | 53·2 | 52·8 | 0·4 | 0·4 | 0·7 | 4 | | 10·0 | Id.; fair. |
| | 19 | 505 | 52·4 | 51·9 | 0·5 | 1·0 | 0·7 | 4 | 4 : — : — | 10·0 | Loose misty scud; nearly uniform. |
| | 20 | 521 | 51·4 | 50·9 | 0·5 | 1·6 | 0·5 | 2 | 4 : — : — | 10·0 | Id.; rain$^{0·5}$ |
| | 21 | 540 | 49·9 | 49·2 | 0·7 | 1·0 | 0·7 | 2 | 4 : — : — | 10·0 | Id.; rain$^{1}$ |
| | 22 | 552 | 49·2 | 48·0 | 1·2 | 0·9 | 0·1 | 4 | 4 : — : — | 10·0 | Scud. |

The direction of the wind is indicated by the number of the point of the compass, reckoning N. = 0, E. = 8, S. = 16, W. = 24. The motions of the three strata of clouds, Sc. (scud), C.-s. (cirro-stratus), and Cir. (cirrus), are indicated in a similar manner.

June 23d 18h 25m. Thunder said to have been heard; also at 24d 1h 30m.

June 24d 4h. Observation made at 4h 10m.

| Gött. Mean Time. | | Barometer at 32°. | Thermometers. Dry. | Wet. | Diff. | Wind. Maximum force in 1h. | 10m. | From | Clouds, Sc. : C.-s. : Ci., moving from | Sky clouded. | Species of Clouds and Meteorological Remarks. |
|---|---|---|---|---|---|---|---|---|---|---|---|
| d. | h. | in. | ° | ° | ° | lbs. | lbs. | pt. | pt. pt. pt. | 0—10. | |
| 24 | 23 | 29·560 | 50·9 | 48·5 | 2·4 | 1·2 | 1·2 | 3 | 4 : — : — | 10·0 | Scud. |
| 25 | 0 | 562 | 50·7 | 48·3 | 2·4 | 1·2 | 0·8 | 2 | 4 : — : — | 10·0 | Id. |
| | 1 | 567 | 49·9 | 48·0 | 1·9 | 1·1 | 0·4 | 3 | 4 : — : — | 10·0 | Id.; rain$^{0\cdot2-1}$ since last hour. |
| | 2 | 568 | 51·7 | 49·0 | 2·7 | 1·1 | 0·8 | 3 | 4 : — : — | 10·0 | Id.; dense uniform cirro-strati; rain$^{0\cdot5}$ |
| | 3 | 574 | 51·6 | 47·7 | 3·9 | 1·2 | 0·9 | 3 | 4 : — : — | 9·9 | Id.; cirro-strati; patches of sky to N. |
| | 4 | 570 | 51·2 | 47·2 | 4·0 | 1·3 | 0·8 | 3 | 3 : — : — | 9·9 | Id.; id. |
| | 5 | 566 | 51·6 | 47·4 | 4·2 | 1·4 | 0·7 | 3 | 3 : — : — | 9·9 | Id.; id. |
| | 6 | 565 | 51·8 | 47·0 | 4·8 | 1·7 | 1·2 | 3 | 3 : — : — | 9·9 | Id. |
| | 7 | 568 | 49·9 | 46·7 | 3·2 | 1·3 | 0·8 | 2 | 4 : — : — | 9·9 | Id. |
| | 8 | 576 | 49·1 | 46·5 | 2·6 | 1·2 | 0·6 | 4 | 5 : — : — | 10·0 | Id. |
| | 9 | 569 | 48·8 | 45·2 | 3·6 | 1·1 | 0·5 | 1 | 5 : — : — | 10·0 | Id. |
| | 10 | 570 | 48·2 | 44·9 | 3·3 | 0·9 | 0·5 | 2 | 5 : — : — | 10·0 | Id.; a few drops of rain. |
| | 11 | 570 | 47·9 | 45·2 | 2·7 | 0·7 | 0·4 | 2 | | 10·0 | Id. |
| | 12 | 574 | 47·2 | 45·1 | 2·1 | 0·9 | 0·5 | 2 | 4 : — : — | 10·0 | Id. |
| | 13 | 29·566 | 46·9 | 45·3 | 1·6 | 0·4 | 0·2 | 2 | 4 : — : — | 10·0 | Scud; rain$^{0\cdot2}$ |
| | 14 | 560 | 46·3 | 45·1 | 1·2 | 0·3 | 0·1 | 2 | 4 : — : — | 10·0 | Id.; rain$^{1}$ since last hour. |
| | 15 | 558 | 46·7 | 45·3 | 1·4 | 0·3 | 0·3 | 2 | 2 : — : — | 10·0 | Id.; rain$^{1}$; occasional patches of sky. |
| | 16 | 558 | 46·0 | 45·0 | 1·0 | 0·2 | 0·1 | 2 | 2 : — : — | 9·8 | Id.; rain$^{0\cdot2}$; cirro-strati to S. |
| | 17 | 554 | 45·6 | 44·7 | 0·9 | 0·2 | 0·0 | 0 | 2 : — : — | 7·0 | Id. |
| | 18 | 557 | 46·9 | 45·9 | 1·0 | 0·2 | 0·1 | 0 | 2 : — : — | 10·0 | Id.; rain$^{1}$ |
| | 19 | 567 | 47·8 | 46·9 | 0·9 | 0·3 | 0·4 | 1 | | 10·0 | Id.; id. |
| | 20 | 569 | 49·1 | 47·8 | 1·3 | 0·9 | 1·0 | 2 | | 10·0 | Id.; id. |
| | 21 | 575 | 50·2 | 47·7 | 2·5 | 0·9 | 0·6 | 2 | 3 : — : — | 9·7 | Loose scud; rain$^{0\cdot5}$ |
| | 22 | 583 | 50·7 | 47·3 | 3·4 | 1·2 | 1·3 | 2 | 4 : — : — | 9·0 | Scud; cirri and cirro-strati. |
| | 23 | 590 | 50·0 | 48·1 | 1·9 | 1·4 | 1·0 | 2 | 4 : — : — | 9·0 | Id.; id.; rain$^{1}$ since 22h. |
| 26 | 0 | 575 | 51·2 | 47·5 | 3·7 | 0·9 | 0·7 | 1 | 3 : — : — | 9·5 | Id.; woolly cirri. |
| | 1 | 610 | 50·7 | 49·0 | 1·7 | 0·7 | 0·4 | 2 | 3 : — : — | 10·0 | Id.; id.; passing showers. |
| | 2 | 619 | 52·0 | 48·9 | 3·1 | 0·6 | 0·5 | 2 | 3 : — : — | 10·0 | Id.; id.; rain$^{0\cdot2}$ |
| | 3 | 618 | 51·5 | 48·2 | 3·3 | 0·7 | 0·2 | 2 | 2 : — : — | 10·0 | Id.; id. |
| | 4 | 619 | 52·2 | 48·5 | 3·7 | 0·2 | 0·1 | 2 | 2 : — : — | 10·0 | Id. |
| | 5 | 626 | 53·0 | 48·7 | 4·3 | 0·1 | 0·1 | 2 | 2 : — : — | 10·0 | Id. |
| | 6 | 626 | 51·8 | 48·4 | 3·4 | 0·2 | 0·1 | 2 | 1 : — : — | 10·0 | Id. |
| | 7 | 638 | 50·8 | 47·3 | 3·5 | 0·3 | 0·3 | 2 | 2 : — : — | 10·0 | Id.; cirro-strati above. |
| | 8 | 651 | 50·0 | 47·0 | 3·0 | 0·3 | 0·2 | 2 | 2 : — : — | 10·0 | Id. |
| | 9 | 664 | 49·3 | 46·7 | 2·6 | 0·2 | 0·1 | 2 | 2 : — : — | 10·0 | Id. |
| | 10 | 662 | 48·8 | 46·2 | 2·6 | 0·1 | 0·1 | 2 | 2 : — : — | 10·0 | Id.; clouds slightly broken at 10h 10m. |
| | 11 | 668 | 48·1 | 45·3 | 2·8 | 0·1 | 0·0 | 1 | | 10·0 | Id. |
| | 12 | 672 | 47·0 | 45·3 | 1·7 | 0·0 | 0·0 | | | 10·0 | Id. |
| | 13 | 39·672 | 47·6 | 44·2 | 3·4 | 0·1 | 0·0 | 1 | | 10·0 | Scud. |
| | 14 | 671 | 47·0 | 44·3 | 2·7 | 0·1 | 0·0 | | | 10·0 | Id.; clouds rather broken. |
| | 15 | 664 | 46·8 | 43·8 | 3·0 | 0·0 | 0·0 | 0 | | 10·0 | Id. |
| | 16 | 654 | 46·7 | 43·9 | 2·8 | 0·1 | 0·0 | | 30 : — : — | 10·0 | Id. |
| | 17 | 659 | 46·9 | 44·2 | 2·7 | 0·0 | 0·0 | | 30 : — : — | 10·0 | Id. |
| | 18 | 666 | 47·6 | 45·0 | 2·6 | 0·0 | 0·0 | 30 | 29 : — : — | 9·9 | Id.; [ranges of cumuli to NE. |
| | 19 | 668 | 48·8 | 45·5 | 3·3 | 0·5 | 0·1 | 1 | 4, 28 : 27 : — | 9·9 | Patches of scud; thin sheet of scud; cir.-cum.-str.; |
| | 20 | 665 | 49·9 | 45·8 | 4·1 | 0·4 | 0·1 | 1 | 0, 28 : 27 : — | 9·9 | Id.; id.; id. |
| | 21 | 669 | 51·5 | 46·6 | 4·9 | 0·4 | 0·2 | 31 | 30 : — : — | 9·9 | Scud; scud and loose cumuli on S. and E. horizon. |
| | 22 | 663 | 52·1 | 47·7 | 4·4 | 0·3 | 0·2 | 3 | 29 : — : — | 8·0 | Id.; cirri and cirro-strati. |
| | 23 | 662 | 55·0 | 49·7 | 5·3 | 0·3 | 0·2 | 4 | 28 : — : — | 9·8 | Id. |
| 27 | 0 | 661 | 55·7 | 49·8 | 5·9 | 0·1 | 0·0 | | 28 : — : — | 9·9 | Id. |
| | 1 | 658 | 56·0 | 49·8 | 6·2 | 0·2 | 0·0 | 31 | 28 : — : — | 9·8 | Id.; cirri and cirro-strati; loose cumuli on horizon. |
| | 2 | 656 | 56·0 | 49·8 | 6·2 | 0·3 | 0·4 | 31 | 26 : — : — | 9·2 | Id. |
| | 3 | 656 | 58·0 | 50·3 | 7·7 | 0·4 | 0·3 | 0 | 27 : — : — | 9·2 | Scud and loose cumuli, slowly; cir. haze; faint halo. |
| | 4 | 658 | 56·2 | 49·3 | 6·9 | 0·3 | 0·2 | 3 | | 10·0 | Id.; id.; id. |
| | 5 | 668 | 54·8 | 49·6 | 5·2 | 0·4 | 0·2 | 4 | | 9·5 | Id. [slowly; patches of scud. |
| | 6 | 657 | 54·2 | 49·0 | 5·2 | 0·2 | 0·0 | 4 | — : 0 : 0 | 3·5 | Mottled cirri, cir.-cum., and cirro-strati, moving very |

The direction of the wind is indicated by the number of the point of the compass, reckoning N. = 0, E. = 8, S. = 16, W. = 24. The motions of the three strata of clouds, Sc. (scud), C.-s. (cirro-stratus), and Cir. (cirrus), are indicated in a similar manner.

June 25d 20h. Observation made at 20h 7m.

| Gött. Mean Time. | Barometer at 32°. | Thermometers. Dry. | Wet. | Diff. | Wind. Maximum force in 1h. | 10m. | From | Clouds, Sc. : C.-s. : Ci., moving from | Sky clouded. | Species of Clouds and Meteorological Remarks. |
|---|---|---|---|---|---|---|---|---|---|---|
| d. h. | in. | | ° | ° | lbs. | lbs. | pt. | pt. pt. pt. | 0—10. | |
| 27 7 | 29·656 | 55·0 | 49·8 | 5·2 | 0·2 | 0·1 | 2 | 29 : — : — | 8·5 | Scud; cirro-strati. |
| 8 | 658 | 53·8 | 48·9 | 4·9 | 0·1 | 0·0 | | 29 : — : — | 9·8 | Id.; id. |
| 9 | 665 | 52·1 | 48·0 | 4·1 | 0·1 | 0·0 | | 29 : — : 1 | 7·0 | Id.; woolly and mottled cirri. |
| 10 | 677 | 50·5 | 47·0 | 3·5 | 0·1 | 0·0 | 4 | 29 : — : — | 9·7 | Id.; cirro-strati and cirrous clouds. |
| 11 | 688 | 48·8 | 46·8 | 2·0 | 0·1 | 0·0 | | 28 : — : — | 9·0 | Cirro-cumulous scud; cirri and cirro-strati. |
| 12 | 701 | 48·2 | 46·9 | 1·3 | 0·0 | 0·0 | | | 9·5 | Scud. |
| 13 | 29·702 | 48·5 | 46·3 | 2·2 | 0·0 | 0·0 | | | 10·0 | Scud. |
| 14 | 701 | 48·2 | 45·5 | 2·7 | 0·1 | 0·0 | | | 10·0 | Id. |
| 15 | 697 | 48·0 | 45·9 | 2·1 | 0·0 | 0·0 | | 28 : — : — | 9·0 | Id.; cirri and cirro-strati. |
| 16 | 704 | 47·9 | 46·0 | 1·9 | 0·0 | 0·0 | | | 9·9 | Cirro-strati, cir.-cum. and cirri; shower[1] since 15h. |
| 17 | 710 | 47·8 | 46·2 | 1·6 | 0·0 | 0·0 | | | 9·8 | Id., id. |
| 18 | 711 | 48·7 | 47·4 | 1·3 | 0·0 | 0·0 | | | 10·0 | Scud, loose cumuli, and masses of cirro-strati. |
| 19 | 720 | 51·9 | 48·5 | 3·4 | 0·1 | 0·1 | 31 | 31 : — : — | 8·5 | Cirro-cumulous scud. |
| 20 | 721 | 53·7 | 48·8 | 4·9 | 0·5 | 0·3 | 30 | 31 : — : — | 7·0 | Id. |
| 21 | 737 | 55·7 | 50·7 | 5·0 | 0·5 | 0·5 | 31 | 0 : — : — | 9·5 | Id. |
| 22 | 755 | 55·7 | 50·4 | 5·3 | 0·8 | 0·1 | 31 | 0 : — : — | 9·0 | Scud and loose cumuli. |
| 23 | 753 | 58·7 | 52·0 | 6·7 | 0·3 | 0·2 | 31 | 31 : — : — | 7·0 | Id. |
| 28 0 | 755 | 61·9 | 54·6 | 6·3 | 0·2 | 0·2 | 0 | 0 : — : — | 9·0 | Id. |
| 1 | 757 | 63·7 | 56·4 | 7·3 | 0·2 | 0·1 | 29 | 31 : — : — | 7·5 | Id. |
| 2 | 757 | 64·7 | 56·6 | 8·1 | 0·3 | 0·1 | 4 | 31 : 31 : — | 6·0 | Id.; cirro-cumuli. |
| 3 | 754 | 64·2 | 58·0 | 6·2 | 0·2 | 0·1 | 6 | 31 : 31 : — | 3·0 | Id.; id. |
| 4 | 756 | 63·8 | 56·9 | 7·9 | 0·2 | 0·0 | 6 | 30 : 30 : — | 5·0 | Id.; id. |
| 5 | 753 | 63·0 | 57·0 | 6·0 | 0·4 | 0·1 | 6 | 30 : 30 : — | 7·5 | Cirro-cumulo-strati, cumuli, and cumulo-strati. |
| 6 | 753 | 61·5 | 56·5 | 5·0 | 0·1 | 0·0 | 7 | — : — : 0 | 8·5 | Woolly cirri; cirro-strati and cumuli on horizon. |
| 7 | 756 | 58·9 | 54·2 | 4·7 | 0·3 | 0·3 | 3 | 30 : — : — | 9·0 | Scud and loose cumuli; cirri, cirro-strati. |
| 8 | 765 | 57·5 | 53·3 | 4·2 | 0·2 | 0·0 | 4 | 26 : 30 : — | 9·5 | Scud and electric-looking cum.; cir.-str. scud; shower[1] |
| 9 | 782 | 55·2 | 52·0 | 3·2 | 0·2 | 0·2 | 3 | 30 : — : — | 7·5 | Scud; cirro-strati and cumuli to SE. and W. |
| 10 | 793 | 52·9 | 51·2 | 1·7 | 0·3 | 0·1 | 3 | 28 : — : — | 7·0 | Scud and loose cumuli. |
| 11 | 802 | 52·9 | 50·8 | 2·1 | 0·3 | 0·3 | 3 | 28 : — : — | 10·0 | Id. |
| 12 | 812 | 52·7 | 50·6 | 2·1 | 0·3 | 0·2 | 3 | | 10·0 | Scud. |
| 13 | 29·819 | 52·0 | 50·1 | 1·9 | 0·6 | 0·3 | 5 | | 10·0 | Scud. |
| 14 | 828 | 50·2 | 48·5 | 1·7 | 0·5 | 0·3 | 5 | | 10·0 | Id.; a few drops of rain. |
| 15 | 828 | 49·6 | 48·1 | 1·5 | 0·3 | 0·1 | 8 | 8 : — : — | 10·0 | Patches of scud; nearly uniform mass above. |
| 16 | 830 | 49·9 | 47·3 | 2·6 | 0·2 | 0·1 | 7 | 7 : — : — | 10·0 | Id.; id. |
| 17 | 835 | 49·8 | 47·3 | 2·5 | 0·2 | 0·1 | 8 | 7 : — : — | 10·0 | Id.; id.; rain[0.1] |
| 18 | 842 | 50·0 | 47·4 | 2·6 | 0·2 | 0·2 | 7 | 7 : — : — | 10·0 | Id.; id.; id. |
| 19 | 844 | 50·7 | 48·2 | 2·5 | 0·1 | 0·0 | 6 | | 10·0 | Cirri and cirro-strati. |
| 20 | 847 | 51·0 | 48·0 | 3·0 | 0·1 | 0·0 | | | 10·0 | Id. |
| 21 | 854 | 51·7 | 48·6 | 3·1 | 0·1 | 0·1 | 4 | | 10·0 | Uniform mass of thick cirro-strati. |
| 22 | 856 | 52·0 | 48·6 | 3·4 | 0·2 | 0·1 | 6 | | 10·0 | Id. |
| 23 | 861 | 55·4 | 51·5 | 3·9 | 0·2 | 0·0 | 4 | | 9·9 | Id. |
| 29 0 | 855 | 58·0 | 54·0 | 4·0 | 0·0 | 0·0 | 7 | 25 : — : — | 9·7 | Scud and loose cumuli; cirri and cirro-strati. |
| 1 | 848 | 60·2 | 57·8 | 2·4 | 0·1 | 0·0 | 4 | 24 : — : — | 7·0 | Id.; id. |
| 2 | 838 | 59·5 | 54·2 | 5·3 | 0·2 | 0·2 | 4 | | 8·0 | Id. |
| 3 | 838 | 62·0 | 55·1 | 6·9 | 0·2 | 0·1 | 4 | 26 : — : — | 7·5 | Id.; cirri, cirro-strati, cirrous haze. |
| 4 | 833 | 60·0 | 53·2 | 6·8 | 0·2 | 0·1 | 7 | | 9·0 | Id.; id. |
| 5 | 829 | 59·8 | 53·2 | 6·6 | 0·3 | 0·3 | 4 | 27 : — : — | 10·0 | Cirro-stratous scud; cirrous clouds. |
| 6 | 831 | 57·2 | 50·9 | 6·3 | 0·3 | 0·2 | 5 | | 10·0 | Nearly uniform mass of cirro-strati; patches of scud. |
| 7 | 823 | 57·8 | 52·3 | 5·5 | 0·2 | 0·1 | 9 | 24 : — : 24 | 9·8 | Cirro-stratous scud and cirri. |
| 8 | 821 | 56·9 | 52·5 | 4·4 | 0·1 | 0·0 | 14 | 24 : — : 24 | 9·2 | Id. |
| 9 | 821 | 54·2 | 50·7 | 3·5 | 0·1 | 0·0 | 15 | | 9·5 | Id. |
| 10 | 824 | 52·7 | 49·3 | 3·4 | 0·1 | 0·0 | 15 | | 9·2 | Id. |
| 11 | 816 | 50·8 | 48·5 | 2·3 | 0·0 | 0·0 | | | 6·0 | Cirro-cumulous scud, cumuli. |
| 12 | 817 | 47·3 | 46·4 | 0·9 | 0·0 | 0·0 | | | 3·0 | Id., cir.-str., light cirri, cirrous haze. |
| 30 0 | 29·709 | ... | ... | ... | 0·2 | ... | | | | |

The direction of the wind is indicated by the number of the point of the compass, reckoning N. = 0, E. = 8, S. = 16, W. = 24. The motions of the three strata of clouds, Sc. (scud), C.-s. (cirro-stratus), and Cir. (cirrus), are indicated in a similar manner.

| Gött. Mean Time. | Barometer at 32°. | Thermometers. Dry. | Wet. | Diff. | Wind. Maximum force in 1h. | 10m. | From | Clouds, Sc. : C.-s. : Ci., moving from | Sky clouded. | Species of Clouds and Meteorological Remarks. |
|---|---|---|---|---|---|---|---|---|---|---|
| d. h. | in. | ° | ° | ° | lbs. | lbs. | pt. | pt. pt. pt. | 0—10. | |
| 30 13 | 29·657 | 45·2 | 44·6 | 0·6 | 0·7 | 0·0 | | | 1·5 | Cirri and cirro-strati on N. and S. horizon. |
| 14 | 648 | 44·0 | 43·9 | 0·1 | 0·0 | 0·0 | | | 0·5 | Id.; heavy dew. |
| 15 | 637 | 42·5 | 42·5 | ... | 0·0 | 0·0 | | | 6·0 | Cirri, cirro-strati, and haze. |
| 16 | 636 | 45·8 | 45·2 | 0·6 | 0·0 | 0·0 | | | 10·0 | Sky covered with a uniform mass of scud. |
| 17 | 637 | 46·4 | 46·0 | 0·4 | 0·0 | 0·0 | | | 10·0 | As before; very foggy. |
| 18 | 634 | 47·9 | 46·9 | 1·0 | 0·0 | 0·0 | | | 10·0 | Id. |
| 19 | 635 | 50·0 | 48·9 | 1·1 | 0·0 | 0·0 | 16 | | 10·0 | Sky covered with a uniform mass of dense clouds. |
| 20 | 635 | 52·0 | 50·5 | 1·5 | 0·0 | 0·0 | | | 10·0 | Id. |
| 21 | 640 | 56·3 | 53·4 | 2·9 | 0·0 | 0·0 | 4 | 4 : — : — | 10·0 | Foggy scud; fog about 2 miles off. |
| 22 | 636 | 55·0 | 52·1 | 2·9 | 0 0 | 0·0 | | 4 : — : — | 10·0 | Id. |
| 23 | 641 | 57·0 | 53·0 | 4·0 | 0·0 | 0·0 | 2 | 3 : — : — | 10·0 | Id. |
| 1 0 | 639 | 59·1 | 53·8 | 5·3 | 0·1 | 0·2 | 2 | 3 : — : — | 10·0 | Foggy scud and loose cumuli. |
| 1 | 643 | 59·1 | 53·8 | 5·3 | 0·5 | 0·4 | 6 | 2 : 24 : — | 9·0 | Loose cumuli; cirro-cumulous scud; clouds broken. ⊙ |
| 2 | 647 | 60·5 | 54·3 | 6·2 | 0·6 | 0·3 | 4 | 2 : — : — | 7·0 | Scud and loose cumuli; streaks of cirri. ⊙ |
| 3 | 645 | 57·7 | 53·0 | 4·7 | 0·7 | 0·6 | 4 | 4 : 24 : — | 6·0 | Id.; patches of cir.-cum. scud, disappearing |
| 4 | 646 | 57·9 | 53·2 | 4·7 | 0·6 | 0·4 | 5 | 6 : — : — | 8·0 | Id.; cirro-cumulous scud. [quickly. ⊖ |
| 5 | 635 | 57·4 | 53·1 | 4·3 | 0·4 | 0·4 | 8 | 6 : 24 : — | 4·0 | Id.; id.; cirri. ⊙ |
| 6 | 633 | 55·8 | 51·9 | 3·9 | 0·4 | 0·4 | 5 | 5 : — : — | 4·0 | Id.; cirri and cirro-strati. |
| 7 | 643 | 53·0 | 50·2 | 2·8 | 0·5 | 0·2 | 6 | 6 : 25 : — | 4·0 | Id.; scud, higher; cirri and cirro-strati. |
| 8 | 650 | 52·7 | 49·8 | 2·9 | 0·2 | 0·2 | 3 | 8 : 26 : — | 9·0 | Patches of scud; cirro-cumulous scud; cirri. |
| 9 | 662 | 51·2 | 49·1 | 2·1 | 0·2 | 0·1 | 3 | | 9·9 | As before; heavy clouds to E. and NE. |
| 10 | 664 | 50·7 | 49·0 | 1·7 | 0·1 | 0·1 | | 28 : — : — | 10·0 | Scud; a few drops of rain. |
| 11 | 670 | 49·6 | 48·8 | 0·8 | 0·1 | 0·0 | 4 | | 9·9 | Id.; slight shower since 10h. |
| 12 | 675 | 49·8 | 49·0 | 0·8 | 0·0 | 0·0 | 4 | 28 : — : — | 9·8 | Id.; cirro-strati and sky to NE. |
| 13 | 29·671 | 49·7 | 49·0 | 0·7 | 0·0 | 0·0 | 4 | 28 : — : — | 10·0 | Scud. |
| 14 | 665 | 49·5 | 48·7 | 0·8 | 0·0 | 0·0 | 3 | | 9·8 | Id.; clouds rather broken; rain0·5 |
| 15 | 659 | 48·8 | 48·2 | 0·6 | 0·0 | 0·0 | 3 | — : 28 : — | 8·0 | Cirro-cumulo-strati, moving slowly; thin smoky scud. |
| 16 | 661 | 47·3 | 47·1 | 0·2 | 0·0 | 0·0 | | 4 : 28 : — | 9·5 | Id.; id. |
| 17 | 664 | 47·8 | 47·2 | 0·6 | 0·0 | 0·0 | | | 9·0 | Id.; id. |
| 18 | 670 | 49·3 | 48·6 | 0·7 | 0·0 | 0·0 | | 4 : 28 : 28 | 3·0 | Loose scud and cum.; cir.-cum. scud; cirri. ⊙ |
| 19 | 666 | 50·2 | 49·2 | 1·0 | 0·0 | 0·0 | | | 3·0 | As before. ⊙ |
| 20 | 672 | 53·3 | 50·3 | 3·0 | 0·0 | 0·0 | | 5 : 26 : — | 9·0 | Thin scud moving rapidly; cir.-cum.-str., cirri, and cirro-strati. ⊙ |
| 21 | 675 | 56·6 | 51·9 | 4·7 | 0·0 | 0·0 | | 2 : — : — | 10·0 | Scud and loose cumuli; cirro-strati, cirro-cumuli. |
| 22 | 678 | 56·2 | 51·2 | 5·0 | 0·1 | 0·1 | 4 | | 10·0 | Id.; id. |
| 23 | 684 | 53·2 | 49·1 | 4·1 | 0·2 | 0·1 | 4 | | 9·8 | Id. |
| 2 0 | 684 | 57·7 | 50·8 | 6·9 | 0.2 | 0·1 | 8 | 28 : 4 : — | 9·6 | Thin scud; scud and loose cumuli. |
| 1 | 681 | 60·1 | 52·3 | 7·8 | 0·2 | 0·1 | 6 | 2 : — : — | 9·5 | Scud and loose cum.; ranges of cum.; cirro-strati. |
| 2 | 679 | 60·7 | 52·6 | 8·1 | 0·1 | 0·0 | | | 9·5 | Id. |
| 3 | 676 | 63·0 | 54·7 | 8·3 | 0·0 | 0·0 | | 31 : — : — | 7·0 | Id. ⊖ |
| 4 | 671 | 62·6 | 54·2 | 8·4 | 0·0 | 0·0 | | 0 : — : — | 9·3 | Id., moving slowly; cum., cir.-str. |
| 5 | 659 | 61·8 | 52·8 | 9·0 | 0·0 | 0·0 | | — : 28 : — | 7·0 | Cirro-cumuli; cumuli and cirro-strati on horizon. ⊙ |
| 6 | 653 | 61·0 | 52·0 | 9·0 | 0·0 | 0·0 | | 28 : 28 : — | 8·2 | Cir.-str. scud, cumuli, and cum.-str. moving slowly. |
| 7 | 658 | 56·7 | 50·8 | 5·9 | 0·0 | 0·0 | 4 | — : — : 28 | 9·0 | Thick and dark wavy cir.-str.; woolly cirri. ⊙ |
| 8 | 659 | 54·9 | 49·6 | 5·3 | 0·0 | 0·2 | 4 | | 9·5 | Id. |
| 9 | 668 | 53·3 | 48·0 | 5·3 | 0·2 | 0·0 | 4 | | 10·0 | Id., looser than before. ⊖ |
| 10 | 678 | 52·7 | 48·0 | 4·7 | 0·0 | 0·0 | 4 | | 10·0 | Id., id. |
| 11 | 681 | 42·0 | 48·3 | 3·7 | 0·0 | 0·0 | 4 | 28 : — : — | 10·0 | Thick heavy scud. |
| 12 | 676 | 51·3 | 48·0 | 3·3 | 0·0 | 0·0 | | | 10·0 | Id. |
| 13 | 29·669 | 50·3 | 48·1 | 2·2 | 0·0 | 0·0 | | | 10·0 | Thick heavy scud. |
| 14 | 668 | 49·8 | 48·0 | 1·8 | 0·0 | 0·0 | | | 9·9 | Id.; sky on N. horizon. |
| 15 | 659 | 49·1 | 47·3 | 1·8 | 0·0 | 0·0 | 4 | | 9·9 | Scud and cir.-str. scud; slight shower at 14h 40m. |
| 16 | 658 | 48·8 | 47·1 | 1·7 | 0·0 | 0·0 | 2 | — : 31 : — | 9·5 | Cirro-cumulous scud and cirro-cumuli. |
| 17 | 655 | 47·7 | 46·6 | 1·1 | 0·0 | 0·0 | | 29 : — : — | 3·0 | Scud; cirro-cumuli and cirro-strati. ☽ |
| 18 | 656 | 50·0 | 48·8 | 1·2 | 0·0 | 0·0 | | — : 29 : — | 8·0 | Cirro-stratous scud; cirro-cumuli, cirro-strati. |
| 19 | 657 | 51·7 | 50·2 | 1·5 | 0·0 | 0·0 | 4 | 7 : 28 : — | 9·8 | Thin smoky scud; large cirro-cumulo-strati. |
| 20 | 655 | 54·5 | 51·9 | 2·6 | 0·0 | 0·0 | 7 | 7 : 28 : — | 9·8 | As before; cumuli and cumulo-strati to E. and S. |

The direction of the wind is indicated by the number of the point of the compass, reckoning N. = 0, E. = 8, S. = 16, W. = 24. The motions of the three strata of clouds, Sc. (scud), C.-s. (cirro-stratus), and Cir. (cirrus), are indicated in a similar manner.

July 1d 1h. For an explanation of the symbols used after the meteorological remarks, see *Introduction*.

July 1d 18h. Fine linear, mottled, and arborescent cirri: loose smoky scud trailing on the ground; patches of smoky scud suddenly rise to SW. and as suddenly disappear.

| Gött. Mean Time. | Barometer at 32°. | Thermometers. Dry. | Wet. | Diff. | Wind. Maximum force in 1h. | 10m. | From | Clouds, Sc. : C.-s. : Ci., moving from | Sky clouded. | Species of Clouds and Meteorological Remarks. |
|---|---|---|---|---|---|---|---|---|---|---|
| d. h. | in. | ° | ° | ° | lbs. | lbs. | pt. | pt. pt. pt. | 0—10. | |
| 2 21 | 29·657 | 55·2 | 51·5 | 3·7 | 0·0 | 0·0 | 4 | — : 28 : — | 10·0 | Large cirro-cumuli ; cirri and cirro-strati. |
| 22 | 655 | 56·0 | 51·2 | 4·8 | 0·1 | 0·1 | 4 | | 10·0 | Id. ; id. |
| 23 | 655 | 57·0 | 52·4 | 4·6 | 0·2 | 0·2 | 6 | 8 : 24 : 24 | 9·9 | Loose scud ; woolly cirri and cirro-cumuli. |
| 3 0 | 655 | 57·7 | 53·2 | 4·5 | 0·2 | 0·3 | 4 | 8 : — : 24 | 9·2 | Thin scud ; woolly cirri and cirro-strati. ⊖ |
| 1 | 646 | 60·3 | 55·0 | 5·3 | 0·2 | 0·2 | 1 | — : — : 25 | 7·5 | Woolly cirri and cirro-strati. ⊙ |
| 2 | 640 | 59·3 | 54·2 | 5·1 | 0·3 | 0·4 | 4 | 10 : 25 : — | 8·0 | Thin scud ; cirro-strati. ⊖ |
| 3 | 634 | 59·6 | 54·8 | 4·8 | 0·5 | 0·2 | 5 | — : 26 : — | 9·9 | Cirro-stratous scud. |
| 4 | 628 | 57·8 | 53·0 | 4·8 | 0·3 | 0·1 | 2 | | 9·9 | Id. ; scud below. |
| 5 | 626 | 57·4 | 53·4 | 4·0 | 0·1 | 0·0 | 4 | 12 : — : — | 10·0 | Scud ; cirro-stratous scud ; drops of rain. |
| 6 | 609 | 59·0 | 55·4 | 3·6 | 0·2 | 0·0 | 14 | 27 : — : — | 9·5 | Scud and cumuli ; electric-looking ; hazy on horizon. |
| 7 | 607 | 58·1 | 54·5 | 3·6 | 0·0 | 0·0 | | 27 : — : — | 9·5 | Id. ; cirro-strati. |
| 8 | 608 | 56·8 | 53·6 | 3·2 | 0·0 | 0·0 | 14 | 27 : — : — | 9·5 | Id. ; dark and gloomy to S. and SW. |
| 9 | 612 | 53·2 | 50·9 | 2·3 | 0·0 | 0·0 | | 12 : 24 : — | 7·0 | Patches of loose scud ; cirro-cumulous scud, slowly. ⊙ |
| 10 | 616 | 50·0 | 48·6 | 1·4 | 0·0 | 0·0 | | — : 26 : — | 6·0 | Cirro-cumulous scud ; cirrous haze and cirro-strati. |
| 11 | 615 | 48·2 | 47·2 | 1·0 | 0·0 | 0·0 | | | 6·0 | Id. |
| 12 | 612 | 46·0 | 45·5 | 0·5 | 0·0 | 0·0 | | | 7·0 | Cirro-strati, woolly cirro-cumuli ; dense clouds to W. |
| 13 | 29·605 | 44·8 | 44·6 | 0·2 | 0·0 | 0·0 | | | 3·0 | Cirro-cumuli and cirro-strati. ☽ |
| 14 | 603 | 43·4 | 43·3 | 0·1 | 0·0 | 0·0 | | | 5·0 | Cirrous haze ; lunar corona ; dew. ☽ |
| 15 | 595 | 45·7 | 45·2 | 0·5 | 0·0 | 0·0 | | | 10·0 | Sky covered with scud. |
| 16 | 582 | 47·0 | 46·5 | 0·5 | 0·0 | 0·0 | | | 10·0 | Id. |
| 17 | 581 | 49·1 | 48·3 | 0·8 | 0·0 | 0·0 | | 4 : — : — | 10·0 | Id. |
| 18 | 574 | 49·6 | 48·9 | 0·7 | 0·0 | 0·0 | | 7 : — : — | 10·0 | Scud. |
| 19 | 573 | 50·1 | 48·9 | 1·2 | 0·2 | 0·2 | 5 | 6 : — : — | 10·0 | Thick scud. |
| 20 | 572 | 51·3 | 49·1 | 2·2 | 0·2 | 0·1 | 6 | 6 : — : — | 10·0 | Id. |
| 21 | 572 | 52·0 | 49·7 | 2·3 | 0·2 | 0·1 | 5 | 8 : — : — | 10·0 | Id. |
| 22 | 570 | 51·7 | 49·0 | 2·7 | 0·3 | 0·3 | 5 | 7 : — : — | 10·0 | Id. |
| 23 | 570 | 52·3 | 49·4 | 2·9 | 0·2 | 0·1 | 6 | 7 : — : — | 10·0 | Id. |
| 4 0 | 565 | 53·7 | 50·4 | 3·3 | 0·2 | 0·2 | 6 | 7 : — : — | 10·0 | Id. |
| 1 | 563 | 52·6 | 49·6 | 3·0 | 0·3 | 0·2 | 6 | 7 : — : — | 10·0 | Id. |
| 2 | 558 | 53·8 | 50·0 | 3·8 | 0·2 | 0·1 | 5 | | 10·0 | Id. ; uniform mass of cirro-strati. |
| 3 | 551 | 54·3 | 50·5 | 3·8 | 0·2 | 0·1 | 6 | | 10·0 | Id. |
| 4 | 539 | 56·0 | 51·4 | 4·6 | 0·2 | 0·1 | 4 | 5 : — : — | 9·9 | Id., becoming cum. to NE. ; dense cir.-str. |
| 5 | 529 | 55·9 | 50·7 | 5·2 | 0·2 | 0·0 | | 2 : 4 : 25 | 4·0 | Thin scud ; loose cum. ; fine locks of cirrus. ⊙ |
| 6 | 518 | 56·9 | 51·1 | 5·8 | 0·1 | 0·1 | | 4 : 0 : — | 6·0 | Scud ; loose cum. ; cirri and cirro-strati, cir. haze. ⊙ |
| 7 | 515 | 53·2 | 49·2 | 4·0 | 0·2 | 0·3 | 4 | 0 : — : — | 2·0 | Patch of thin scud ; cirri. ⊙ |
| 8 | 521 | 51·2 | 47·6 | 3·6 | 0·3 | 0·3 | 2 | — : — : 25 | 0·7 | Fine reticulated cirri ; scud, cum., cir.-str. on hor. ⊙ |
| 9 | 521 | 48·0 | 45·7 | 2·3 | 0·3 | 0·0 | | — : — : 25 | 1·0 | Varieties of cirri lying W by N. to E by S. ; cir.-str. on |
| 10 | 524 | 44·6 | 43·6 | 1·0 | 0·0 | 0·0 | | 4 : — : — | 1·0 | Scud to N. ; cirri, tinged with red to NW. [hor. ⊙ |
| 11 | 528 | 45·8 | 45·0 | 0·8 | 0·0 | 0·0 | | 2 : — : — | 9·8 | Scud. |
| 12 | 518 | 46·8 | 46·0 | 0·8 | 0·0 | 0·0 | | | 10·0 | Id. |
| 13 | 29·510 | 47·3 | 46·5 | 0·8 | 0·0 | 0·0 | | | 10·0 | Scud. |
| 14 | 503 | 47·7 | 46·6 | 1·1 | 0·0 | 0·0 | 24 | | 9·9 | Id. ; sky to N. |
| 15 | 498 | 47·4 | 46·7 | 0·7 | 0·0 | 0·0 | 24 | 2 : — : — | 9·8 | Mottled scud. |
| 16 | 485 | 47·6 | 46·9 | 0·7 | 0·0 | 0·0 | | 3 : — : — | 10·0 | Scud. |
| 17 | 484 | 48·1 | 47·2 | 0·9 | 0·0 | 0·0 | | 3 : — : — | 10·0 | Id. |
| 18 | 488 | 49·1 | 48·0 | 1·1 | 0·0 | 0·0 | | 4 : — : — | 10·0 | Thin smoky scud. |
| 19 | 491 | 50·8 | 49·0 | 1·8 | 0·0 | 0·0 | | | 10·0 | Scud on Cheviot. |
| 20 | 490 | 51·7 | 49·3 | 2·4 | 0·0 | 0·0 | | 0 : — : — | 10·0 | Scud. |
| 21 | 489 | 53·7 | 50·6 | 3·1 | 0·0 | 0·0 | | | 10·0 | Cir.-str. scud over the sky ; patches of loose scud below. |
| 22 | 485 | 54·9 | 51·9 | 3·0 | 0·0 | 0·0 | | 0 : — : — | 10·0 | Scud ; cirro-stratous scud. |
| 23 | 483 | 56·1 | 52·0 | 4·1 | 0·0 | 0·0 | | | 10·0 | Id. ; id. |
| 5 0 | 475 | 56·9 | 52·0 | 4·9 | 0·0 | 0·0 | | 27 : — : — | 10·0 | Id. ; loose cumuli and cirrous clouds. |
| 1 | 475 | 57·3 | 52·5 | 4·8 | 0·0 | 0·0 | | 28 : — : — | 10·0 | Id. ; id. |
| 2 | 475 | 58·9 | 54·0 | 4·9 | 0·0 | 0·0 | 14 | | 10·0 | Id. |
| 3 | 477 | 58·5 | 53·4 | 5·1 | 0·0 | 0·0 | | 27 : — : — | 10·0 | Id. |
| 4 | 482 | 60·0 | 54·8 | 5·2 | 0·0 | 0·0 | | 28 : — : — | 10·0 | Id. ; cirro-strati. |

The direction of the wind is indicated by the number of the point of the compass, reckoning N. = 0, E. = 8, S. = 16, W. = 24. The motions of the three strata of clouds, Sc. (scud), C.-s. (cirro-stratus), and Cir. (cirrus), are indicated in a similar manner.

| Gött. Mean Time. | Barometer at 32°. | Thermometers. Dry. | Wet. | Diff. | Wind. Maximum force in 1h. | 10m. | From | Clouds, Sc.: C.-s.: Ci., moving from | Sky clouded. | Species of Clouds and Meteorological Remarks. |
|---|---|---|---|---|---|---|---|---|---|---|
| d. h. | in. | ° | ° | ° | lbs. | lbs. | pt. | pt. pt. pt. | 0—10. | |
| 5 5 | 29·480 | 60·0 | 54·9 | 5·1 | 0·0 | 0·0 | 15 | | 10·0 | Wavy cirro-stratus, moving very slowly. |
| 6 | 478 | 59·4 | 54·3 | 5·1 | 0·0 | 0·0 | | | 10·0 | Thick wavy cirro-stratus, moving very slowly. |
| 7 | 487 | 55·8 | 52·3 | 3·5 | 0·1 | 0·1 | 4 | 0 : — : — | 10·0 | Scud. |
| 8 | 491 | 53·8 | 50·7 | 3·1 | 0·1 | 0·1 | 4 | 0 : — : — | 10·0 | Thick wavy scud. |
| 9 | 501 | 52·9 | 50·3 | 2·6 | 0·0 | 0·0 | 4 | 0 : — : — | 10·0 | Id. |
| 10 | 509 | 52·3 | 50·0 | 2·3 | 0·0 | 0·0 | 2 | 0 : — : — | 10·0 | Id. |
| 11 | 510 | 52·1 | 50·1 | 2·0 | 0·0 | 0·0 | 2 | 0 : — : — | 10·0 | Id. |
| 12 | 519 | 51·6 | 49·4 | 2·2 | 0·1 | 0·0 | 4 | | 10·0 | Scud. |
| 13 | 29·521 | 51·0 | 49·6 | 1·4 | 0·0 | 0·0 | 2 | | 10·0 | Scud. |
| 14 | 528 | 50·6 | 49·2 | 1·4 | 0·0 | 0·0 | 2 | | 10·0 | Id. |
| 15 | 531 | 50·3 | 49·0 | 1·3 | 0·0 | 0·0 | | 28 : — : — | 10·0 | Id. |
| 16 | 535 | 50·5 | 49·4 | 1·1 | 0·0 | 0·0 | 4 | 6 : 28 : — | 10·0 | Loose scud; cirro-stratous scud. |
| 17 | 543 | 50·1 | 49·1 | 1·0 | 0·0 | 0·0 | 4 | | 10·0 | Uniform mass of clouds. |
| 18 | 558 | 49·7 | 49·0 | 0·7 | 0·0 | 0·0 | 4 | | 10·0 | Id.; fog visible ¾ mile off. |
| 19 | 570 | 49·9 | 49·3 | 0·6 | 0·1 | 0·0 | 4 | | 10·0 | As before; fog at ½ mile; very light drizzle. |
| 20 | 579 | 50·5 | 49·7 | 0·8 | 0·0 | 0·0 | 4 | 6 : — : — | 10·0 | Loose scud; fog as before. |
| 21 | 586 | 50·9 | 49·9 | 1·0 | 0·0 | 0·0 | 5 | | 10·0 | Scud; very light drizzle. |
| 22 | 601 | 51·5 | 50·3 | 1·2 | 0·0 | 0·0 | | | 10·0 | Id.; rain0·2 |
| 23 | 607 | 53·8 | 52·3 | 1·5 | 0·0 | 0·0 | | 30 : — : — | 10·0 | Id.; slight drizzle. |
| 6 0 | 618 | 54·3 | 52·5 | 1·8 | 0·0 | 0·0 | 8 | 28 : — : — | 10·0 | Thin smoky scud; rain0·2 |
| 1 | 620 | 57·2 | 54·9 | 2·3 | 0·0 | 0·0 | | 28 : — : — | 10·0 | Id.; fair. |
| 2 | 630 | 52·2 | 51·3 | 0·9 | 0·2 | 0·0 | 8 | 6 : 28 : — | 9·5 | Scud in two currents; cum. and cum.-str. to E.; light drizzle. |
| 3 | 631 | 60·4 | 56·3 | 4·1 | 0·0 | 0·0 | | 30 : — : — | 9·6 | Scud, loose cumuli, and woolly cirri. |
| 4 | 635 | 59·2 | 54·3 | 4·9 | 0·0 | 0·0 | | 30 : — : — | 9·0 | Thin scud; loose cumuli; cirri and cirro-strati. |
| 5 | 649 | 58·0 | 53·3 | 4·7 | 0·3 | 0·3 | 2 | 1 : 28 : — | 3·0 | Scud in two currents. ⊙ |
| 6 | 655 | 56·1 | 51·6 | 4·5 | 0·5 | 0·3 | 6 | 0 : 29 : 0 | 4·0 | Id.; cirri and cirro-cumuli. ⊙ |
| 7 | 666 | 56·4 | 51·3 | 5·1 | 0·4 | 0·5 | 7 | — : 0 : — | 6·0 | Loose cirro-cumuli, moving very slowly; scud. ⊙ |
| 8 | 684 | 55·1 | 51·1 | 4·0 | 0·5 | 0·0 | 8 | 30 : 0 : 0 | 7·0 | Scud; mottled cirri and cirro-cumuli. ⊙ |
| 9 | 699 | 52·9 | 50·8 | 2·1 | 0·1 | 0·1 | 4 | — : 30 : — | 9·0 | Cir.-str. scud; loose scud to E.; strati on Cheviot. |
| 10 | 711 | 51·8 | 49·7 | 2·1 | 0·2 | 0·1 | 6 | 6 : 30 : — | 9·9 | Loose scud; cirro-stratous scud. |
| 11 | 730 | 50·8 | 48·9 | 1·9 | 0·1 | 0·0 | 4 | 28 : — : — | 9·0 | Scud. |
| 12 | 729 | 50·5 | 48·9 | 1·6 | 0·0 | 0·0 | 12 | | 9·8 | Loose scud; cirro-strati to E. |
| 7 0 | 29·745 | ... | ... | ... | 0·1 | 0·1 | 2 | | ..... | [much dew. ☽ |
| 13 | 29·705 | 43·6 | 43·4 | 0·2 | 0·8 | 0·0 | | — : — : 0 | 1·3 | Cirri and cir.-str. radiating from N.; faint lunar corona; |
| 14 | 707 | 43·4 | 43·3 | 0·1 | 0·0 | 0·0 | | — : — : 28 | 5·5 | As before. ☽ |
| 15 | 698 | 42·7 | 42·7 | ... | 0·0 | 0·0 | 18 | — : — : 26 | 2·0 | Cirri and cirro-strati. ☽ |
| 16 | 694 | 41·6 | 41·6 | ... | 0·0 | 0·0 | | — : 28 : 28 | 8·0 | Cir.-cum., cirri, cir.-str.; strati; clouds red to W. ☽ |
| 17 | 687 | 44·7 | 44·3 | 0·4 | 0·0 | 0·0 | | | 9·2 | As before; strati to N. ⊙ |
| 18 | 675 | 46·3 | 45·8 | 0·5 | 0·0 | 0·0 | 24 | — : 28 : — | 9·5 | Cir.-str. edged with cir.; lin. and arborescent cirri to E. |
| 19 | 674 | 51·0 | 49·9 | 1·1 | 0·0 | 0·0 | 24 | — : 27 : — | 9·3 | Woolly cirro-strati; woolly cirri. ⊙ |
| 20 | 676 | 54·0 | 51·2 | 2·8 | 0·0 | 0·0 | 22 | | 9·0 | Id.; id.; patches of scud. ⊖ |
| 21 | 673 | 58·7 | 52·5 | 6·2 | 0·1 | 0·1 | 28 | — : 26 : — | 7·0 | Cirro-cumulo-strati; cirro-strati. ⊖ |
| 22 | 666 | 61·0 | 52·8 | 8·2 | 0·2 | 0·1 | 23 | — : 28 : — | 8·0 | Id.; cirro-strati to W.; cum. to SE. ⊖ |
| 23 | 663 | 62·2 | 55·0 | 7·2 | 0·3 | 0·2 | 26 | | 9·3 | Cirro-stratous scud; cirro-strati, cumuli. |
| 8 0 | 666 | 60·0 | 53·3 | 6·7 | 0·3 | 0·2 | 23 | | 9·9 | Cumuli and scud to SE.; thick cirro-strati. |
| 1 | 669 | 61·5 | 55·9 | 5·6 | 0·3 | 0·1 | 23 | 26 : — : — | 10·0 | Scud; cumuli, thick cirro-strati; drops of rain. |
| 2 | 656 | 60·3 | 56·3 | 4·0 | 0·2 | 0·1 | 20 | | 10·0 | As before; fair. |
| 3 | 642 | 64·2 | 58·0 | 6·2 | 0·3 | 0·2 | 23 | 28 : — : — | 9·9 | Scud and loose cumuli. |
| 4 | 629 | 65·2 | 58·1 | 7·1 | 0·2 | 0·1 | 23 | 28 : — : — | 5·0 | Loose cumuli; cirro-strati to NE. ⊙ |
| 5 | 607 | 66·0 | 56·0 | 10·0 | 0·5 | 0·2 | 20 | 26 : — : — | 3·0 | Cumuli. ⊙ |
| 6 | 596 | 64·3 | 55·7 | 8·6 | 0·5 | 0·8 | 27 | 23 : — : — | 3·0 | Id.; cirro-strati on NE. and SW. horizon. ⊙ |
| 7 | 602 | 61·4 | 54·0 | 7·4 | 0·7 | 0·6 | 27 | | 1·5 | Id.; id. ⊙ |
| 8 | 610 | 61·9 | 53·3 | 8·6 | 0·4 | 0·3 | 22 | | 2·0 | Loose cumuli and cirro-strati. ⊙ |
| 9 | 613 | 55·1 | 51·7 | 3·4 | 0·3 | 0·1 | 23 | — : 26 : — | 2·0 | Cirro-stratous scud, cirro-strati, cirro-cumuli, cirri. ⊙ |
| 10 | 614 | 52·2 | 49·8 | 2·4 | 0·1 | 0·0 | 22 | — : 26 : — | 2·0 | As before. |

The direction of the wind is indicated by the number of the point of the compass, reckoning N. = 0, E. = 8, S. = 16, W. = 24. The motions of the three strata of clouds, Sc. (scud), C.-s. (cirro-stratus), and Cir. (cirrus), are indicated in a similar manner.

July 6d 5h. A light vane, composed of two crow feathers, erected instead of the ribbon previously in use, see *Introduction*.

| Gött. Mean Time. | Barometer at 32°. | Thermometers. Dry. | Wet. | Diff. | Wind. Maximum force in 1h. | 10m. | From | Clouds, Sc. : C.-s. : Ci., moving from | Sky clouded. | Species of Clouds and Meteorological Remarks. |
|---|---|---|---|---|---|---|---|---|---|---|
| d. h. | in. | ° | ° | ° | lbs. | lbs. | pt. | pt. pt. pt. | 0—10. | |
| 8 11 | 29·617 | 50·6 | 48·8 | 1·8 | 0·1 | 0·0 | | | 2·5 | Cirro-cumulous scud ; cirro-strati. |
| 12 | 615 | 51·4 | 49·0 | 2·4 | 0·0 | 0·0 | 22 | | 6·0 | Scud ; cirro-strati. |
| 13 | 29·616 | 50·7 | 48·7 | 2·0 | 0·1 | 0·0 | 20 | | 8·0 | Scud ; cirro-strati on horizon. |
| 14 | 606 | 48·5 | 47·6 | 0·9 | 0·0 | 0·0 | | | 2·5 | Scud and cirro-strati on horizon. ☽ |
| 15 | 605 | 49·2 | 48·0 | 1·2 | 0·0 | 0·0 | | 26 : — : — | 10·0 | Thick scud. |
| 16 | 608 | 50·2 | 49·0 | 1·2 | 0·0 | 0·0 | | 26 : — : — | 10·0 | Scud ; cirro-strati. |
| 17 | 612 | 51·0 | 49·4 | 1·6 | 0·0 | 0·0 | 20 | 26 : — : — | 9·9 | Cirro-stratous scud ; cirro-cumuli and cirri to S. |
| 18 | 616 | 52·6 | 50·3 | 2·3 | 0·0 | 0·0 | | — : 29 : — | 9·9 | Cirro-strati and cirro-stratous scud ; sky to S. |
| 19 | 617 | 54·9 | 52·0 | 2·9 | 0·0 | 0·0 | 22 | — : 30 : — | 9·8 | Id. [or rain to E. |
| 20 | 618 | 57·2 | 53·3 | 3·9 | 0·1 | 0·1 | 30 | 31 : — : — | 9·9 | Patches of scud ; thick uniform mass of cir.-str., mist |
| 21 | 629 | 57·2 | 53·0 | 4·2 | 0·3 | 0·2 | 31 | | 10·0 | As before. |
| 22 | 634 | 57·8 | 53·5 | 4·3 | 0·4 | 0·2 | 31 | 31 : — : — | 10·0 | Scud ; cirro-strati. |
| 23 | 635 | 59·2 | 55·2 | 4·0 | 0·3 | 0·2 | 31 | 0 : — : — | 10·0 | Id. ; id. |
| 9 0 | 641 | 60·1 | 55·4 | 4·7 | 0·3 | 0·2 | 31 | 31 : — : — | 10·0 | Id. ; id. |
| 1 | 650 | 57·2 | 56·5 | 0·7 | 0·2 | 0·1 | 2 | 0 : — : — | 10·0 | Scud very low ; rain to E. ; rain$^{1·5}$ since 0h. |
| 2 | 664 | 57·2 | 55·8 | 1·4 | 0·4 | 0·2 | 31 | 0 : — : — | 10·0 | Scud ; cirro-strati. |
| 3 | 675 | 58·3 | 55·6 | 2·7 | 0·5 | 0·7 | 2 | 2 : — : — | 10·0 | Id. |
| 4 | 691 | 58·0 | 55·0 | 3·0 | 0·6 | 0·1 | 4 | 3 : — : — | 10·0 | Id. |
| 5 | 692 | 57·5 | 54·5 | 3·0 | 0·1 | 0·1 | 8 | 4 : 30 : — | 9·9 | Id. ; cirro-stratus. |
| 6 | 693 | 57·4 | 54·2 | 3·2 | 0·1 | 0·0 | 6 | 4 : 28 : — | 9·9 | Loose scud ; cirro-cumulo-strati, cirro-cumulous scud. |
| 7 | 694 | 57·0 | 53·3 | 3·7 | 0·1 | 0·0 | 7 | 4 : 26 : — | 9·9 | Id. ; id., id. |
| 8 | 695 | 56·6 | 53·4 | †3·2 | 0·0 | 0·0 | 8 | 4 : 28 : — | 7·0 | Patches of scud ; woolly cir.-cum. and cirro-strati. ⊙ |
| 9 | 697 | 54·0 | 52·5 | ↓1·5 | 0·0 | 0·0 | 8 | — : 28 : — | 9·9 | Cirro-stratous scud. [from SSE. (14) ; rain$^{0·5}$ |
| 10 | 702 | 53·7 | 52·5 | 1·2 | 0·0 | 0·0 | 30 | | 10·0 | Thick scud and cir.-str. ; smoke 5 miles to E. moves |
| 11 | 700 | 52·1 | 52·1 | ··· | 0·0 | 0·0 | 1 | | 10·0 | Scud ; rain$^{1}$ ; rain$^{3}$ since 10h. |
| 12 | 704 | 52·5 | 52·0 | 0·5 | 0·0 | 0·0 | 6 | 26 : — : — | 10·0 | Id. |
| 13 | 29·706 | 50·8 | 50·6 | 0·2 | 0·0 | 0·0 | 7 | | 7·0 | Sky in zenith. |
| 14 | 696 | 48·0 | 47·8 | 0·2 | 0·0 | 0·0 | | | 8·0 | Cirro-cumuli ; very foggy. ☽ |
| 15 | 680 | 49·0 | 48·9 | 0·1 | 0·0 | 0·0 | | 21 : 28 : — | 9·0 | Smoky scud ; cir.-cum.-str. ; fog at ¼ mile. |
| 16 | 683 | 49·0 | 48·4 | 0·6 | 0·0 | 0·0 | 23 | 22 : — : — | 9·9 | Id. ; woolly cirri, tinged with red. |
| 17 | 682 | 48·5 | 47·9 | 0·6 | 0·0 | 0·0 | 22 | 24 : 30 : — | 10·0 | Scud in two currents ; cir.-str. radiating from NNW. |
| 18 | 674 | 49·0 | 48·0 | 1·0 | 0·0 | 0·0 | 20 | — : 24 : — | 9·9 | Cir.-str. scud ; cirri and cirro-strati ; scud on Cheviot. |
| 19 | 672 | 51·7 | 51·0 | 0·7 | 0·0 | 0·0 | 20 | — : 28 : — | 8·5 | Cir.-cum.-str. and cir.-str. ; lin. cirri ; scud on Cheviot. |
| 20 | 663 | 55·7 | 52·1 | 3·6 | 0·3 | 0·2 | 22 | 24 : 28 : — | 9·5 | Masses of loose scud ; cirro-strati. |
| 21 | 646 | 57·7 | 53·1 | 4·6 | 0·5 | 0·3 | 21 | 24 : 25 : — | 9·2 | Patches of scud ; woolly cirro-strati. ⊖ |
| 22 | 630 | 60·6 | 55·1 | 5·5 | 0·5 | 0·5 | 21 | 24 : 25 : — | 9·0 | Scud and loose cumuli ; woolly cirri, cirro-strati. ⊙ |
| 23 | 619 | 64·0 | 57·2 | 6·8 | 0·9 | 0·5 | 20 | 23 : — : — | 8·5 | Loose cumuli ; cirro-cumuli, cirro-strati, cirri. ⊙ |
| 10 0 | 602 | 66·0 | 58·3 | 7·7 | 1·5 | 1·1 | 20 | 20 : 26 : — | 7·5 | Id. ; id., id., id. ⊖ |
| 1 | 596 | 64·0 | 56·7 | 7·3 | 1·8 | 0·9 | 20 | 21 : — : — | 9·9 | Scud and cumuli ; cirro-strati. |
| 2 | 587 | 61·0 | 55·3 | 5·7 | 1·8 | 0·7 | 20 | 21 : — : — | 10·0 | Id. ; dense cirro-stratus. |
| 3 | 567 | 58·8 | 54·7 | 4·1 | 1·2 | 0·9 | 20 | 21 : — : — | 10·0 | Thick heavy scud ; a few drops of rain. |
| 4 | 538 | 59·6 | 57·4 | 2·2 | 1·0 | 1·2 | 19 | 21 : — : — | 10·0 | Id. ; dense cirro-strati ; rain$^{0·5-2·0}$ |
| 5 | 513 | 58·0 | 54·9 | 3·1 | 1·3 | 0·9 | 19 | 21 : — : — | 10·0 | As before ; uniform mass of dense cirro-strati. |
| 6 | 501 | 57·9 | 55·5 | 2·4 | 1·3 | 0·3 | 19 | 21 : — : — | 10·0 | Id. ; id. |
| 7 | 476 | 60·0 | 57·3 | 2·7 | 1·2 | 1·2 | 19 | 21 : 25 : — | 9·5 | Loose scud, moving quickly ; cirro-strati, cirro-cumuli. |
| 8 | 462 | 58·0 | 55·3 | 2·7 | 1·3 | 1·3 | 21 | 21 : 24 : — | 10·0 | Patches of loose scud ; thick cirro-stratous scud. |
| 9 | 467 | 58·9 | 56·5 | 2·4 | 1·0 | 0·2 | 22 | 24 : — : — | 9·7 | Scud ; cirro-strati to N. and E. ; cumuli on S. horizon. |
| 10 | 470 | 57·9 | 54·8 | 3·1 | 0·8 | 0·3 | 24 v. | 25 : — : — | 3·0 | Id. ; cirro-strati and cirro-cumuli to N. |
| 11 | 499 | 56·6 | 53·6 | 3·0 | 1·5 | 0·2 | 20 | 25 : 25 : — | 6 0 | Id. ; cirro-stratous scud ; white cirro-cumuli-strati. |
| 12 | 503 | 56·3 | 53·6 | 2·7 | 0·3 | 0·4 | 23 | | 8·2 | Nearly as at 11h. |
| 13 | 29·497 | 55·7 | 52·3 | 3·4 | 0·6 | 0·1 | 20 | | 9·5 | Nearly as at 11h. |
| 14 | 482 | 55·0 | 52·0 | 3·0 | 0·3 | 0·1 | 18 | | 10·0 | Id. |
| 15 | 486 | 54·0 | 50·5 | 3·5 | 0·4 | 0·7 | 22 | 26 : 24 : 24 | 9·0 | Scud ; woolly cir.-cum.-str, linear and woolly cirri. |
| 16 | 489 | 52·6 | 49·1 | 3·5 | 0·4 | 0·4 | 21 | 26 : 24 : — | 6·0 | Thin scud ; cirro-cumulo-strati. |
| 17 | 509 | 53·4 | 49·9 | †3·5 | 0·4 | 0·1 | 24 | 26 : 24 : — | 8·0 | As before ; the scud orange in some places. ⊙ |

The direction of the wind is indicated by the number of the point of the compass, reckoning N. = 0, E. = 8, S. = 16, W. = 24. The motions of the three strata of clouds, Sc. (scud), C.-s. (cirro-stratus), and Cir. (cirrus), are indicated in a similar manner.

† ↓ See *Introduction*,—article Thermometers.

| Gött. Mean Time. | | Barometer at 32°. | Thermometers. Dry. | Wet. | Diff. | Wind. Maximum force in 1h. | 10m. | From | Clouds, Sc. : C.-s. : Ci., moving from | Sky clouded. | Species of Clouds and Meteorological Remarks. |
|---|---|---|---|---|---|---|---|---|---|---|---|
| d. | h. | in. | ° | ° | ° | lbs. | lbs. | pt. | pt. pt. pt. | 0—10. | |
| 10 | 18 | 29·513 | 53·4 | 49·3 | 4·1 | 0·1 | 0·1 | 21 | — : 26 : — | 1·2 | Cirro-stratous scud ; patches of cirri. ⊙ |
| | 19 | 505 | 56·3 | 51·3 | 5·0 | 0·6 | 0·4 | 21 | 24 : — : 27 | 5·0 | Scud ; woolly cirri ; cirro-strati. ⊙ |
| | 20 | 493 | 56·8 | 52·0 | 4·8 | 1·0 | 0·6 | 21 | | 7·0 | Id. ; id. ; id. ⊖ |
| | 21 | 468 | 59·3 | 53·0 | ↓6·3 | 1·1 | 1·8 | 20 | 24 : 24 : — | 5·5 | Loose cumuli ; patches of watery cirro-strati. ⊙ |
| | 22 | 474 | 57·7 | 53·7 | 4·0 | 2·5 | 0·7 | 28 | | 9·9 | As before ; rain falling to NE. |
| | 23 | 458 | 60·0 | 53·0 | 7·0 | 2·2 | 2·2 | 26 | | 7·5 | Scud and loose cumuli ; cirro-strati to E. ⊙ |
| 11 | 0 | 462 | 60·6 | 53·4 | 7·2 | 3·3 | 1·1 | 24 | 24 : — : — | 9·9 | Id. |
| | 1 | 474 | 59·3 | 53·0 | 6·3 | 2·3 | 1·6 | 28 | 24 : — : — | 10·0 | Id. |
| | 2 | 464 | 58·2 | 52·7 | 5·5 | 2·0 | 1·6 | 22 | 23 : — : — | 9·9 | Scud ; rain$^{0·5}$ since 1h. |
| | 3 | 457 | 59·8 | 54·0 | 5·8 | 2·5 | 2·0 | 22 | 22 : 26 : — | 7·0 | Id. ; woolly cirri ; loose cumuli on horizon. |
| | 4 | 453 | 61·0 | 55·0 | 6·0 | 2·6 | 0·9 | 20 | 23 : — : — | 9·0 | Scud and loose cumuli ; cirri and cirro-strati. |
| | 5 | 452 | 59·2 | 54·8 | 4·4 | 2·2 | 0·8 | 20 | | 7·0 | Scud, cumuli, and nimbi ; cirro-strati ; passing showers. |
| | 6 | 460 | 61·0 | 54·9 | †6·1 | 1·7 | 1·9 | 21 | 25 : — : — | 3·0 | Nearly as at 5h, no nimbi. ⊙ |
| | 7 | 461 | 60·5 | 54·8 | 5·7 | 2·3 | 1·3 | 22 | 24 : — : — | 4·0 | Scud and loose cumuli ; cirri to S. ⊙ |
| | 8 | 470 | 57·3 | 52·7 | 4·6 | 1·5 | 0·4 | 21 | 24 : — : — | 7·0 | Id. ; id. ⊙ |
| | 9 | 476 | 54·8 | 51·3 | ↓3·5 | 0·8 | 0·5 | 21 | 24 : 26 : — | 7·2 | Orange-coloured scud ; cir.-str. scud ; cum.-str., cirri. ⊙ |
| | 10 | 479 | 52·7 | 49·7 | 3·0 | 0·6 | 0·4 | 21 | 27 : 27 : — | 1·0 | Masses of scud and cirro-strati. |
| | 11 | 474 | 51·9 | 49·2 | 2·7 | 0·7 | 0·2 | 20 | 26 : 26 : — | 1·0 | Id. |
| | 12 | 482 | 49·9 | 48·6 | 1·3 | 0·4 | 0·2 | 20 | | 1·5 | Scud, cirro-strati. |
| | 13 | 29·490 | 51·6 | 49·1 | 2·5 | 0·2 | 0·2 | 21 | | 7·0 | Scud, cirro-strati. |
| | 14 | 490 | 49·6 | 47·9 | 1·7 | 0·3 | 0·0 | 20 | | 7·5 | Id. ; id. |
| | 15 | 488 | 49·7 | 48·2 | 1·5 | 0·1 | 0·0 | 20 | 27 : — : — | 7·5 | Id. ; id. |
| | 16 | 488 | 49·7 | 48·3 | 1·4 | 0·2 | 0·2 | 20 | — : 26 : — | 5·0 | Cirro-cumulous scud ; cirro-strati. |
| | 17 | 500 | 51·0 | 49·0 | 2·0 | 0·2 | 0·1 | 24 | — : 26 : — | 9·5 | Id. ; id. |
| | 18 | 516 | 52·1 | 49·6 | 2·5 | 0·2 | 0·1 | 22 | — : 26 : — | 9·5 | Cir.-cum. scud ; cir.-str. ; cum. ; stratus on Cheviot |
| | 19 | 530 | 53·2 | 50·0 | 3·2 | 0·2 | 0·1 | 22 | 27 : 25 : — | 7·5 | Smoky scud ; cir.-str. scud ; streaks of cirri. ⊖ |
| | 20 | 540 | 54·7 | 50·6 | 4·1 | 0·3 | 0·1 | 22 | 28 : 24 : — | 8·0 | Cir.-cum. scud ; scud and piles of cumuli. ⊖ |
| | 21 | 546 | 55·4 | 50·9 | 4·5 | 0·3 | 0·2 | 26 | 26 : — : — | 6·0 | Scud ; cirro-cumuli, cirro-strati, cum.-str. on hor. ⊖ |
| | 22 | 556 | 57·1 | 51·8 | 5·3 | 0·3 | 0·4 | 23 | 28 : — : — | 9·0 | Id. ; cumuli on horizon. ⊖ |
| | 23 | 563 | 58·6 | 50·5 | 8·1 | 0·7 | 0·7 | 28 | 26 : — : — | 9·0 | Scud and loose cumuli. ⊙ |
| 12 | 0 | 571 | 59·6 | 51·4 | 8·2 | 0·9 | 0·6 | 28 | 27 : — : — | 9·5 | Id. |
| | 1 | 572 | 61·8 | 53·9 | 7·9 | 0·5 | 1·2 | 25 | 26 : — : — | 9·5 | Id. ⊖ |
| | 2 | 581 | 59·4 | 51·7 | 7·7 | 0·7 | 0·6 | 25 | 26 : — : — | 9·7 | Scud ; cumuli, cirrous haze, cirro-strati. |
| | 3 | 576 | 59·3 | 52·8 | 6·5 | 0·6 | 0·5 | 22 | 27 : — : — | 7·0 | Id. ; rain falling to N. ⊖ |
| | 4 | 583 | 56·2 | 52·2 | 4·0 | 0·5 | 0·1 | 25 | 27 : — : — | 9·9 | Id. ; shower$^{1}$ since 3h. |
| | 5 | 587 | 58·8 | 51·8 | 7·0 | 0·7 | 0·8 | 29 | 28 : 28 : — | 9·5 | Dark scud, cir.-cum. scud ; cum.-str. and nimbi, shower$^{1}$ |
| | 6 | 590 | 57·9 | 52·2 | 5·7 | 0·4 | 0·2 | 30 | 28 : 28 : — | 9·8 | Scud and cir.-str. scud ; cum.-str. on hor. ; shower$^{0·2}$ |
| | 7 | 590 | 57·0 | 51·2 | 5·8 | 0·3 | 0·1 | 28 | 28 : 28 : — | 9·9 | Id. ; mottled cirri ; cumuli. ⊖ |
| | 8 | 592 | 56·8 | 51·0 | 5·8 | 0·3 | 0·3 | 28 | | 8·5 | Id. ; loose cirro-cumuli to W. ⊖ |
| | 9 | 602 | 53·6 | 49·3 | 4·3 | 0·1 | 0·1 | 28 | 24 : 27 : — | 9·0 | Scud ; cirro-stratous scud ; cirri and cirro-strati. |
| | 10 | 612 | 51·8 | 48·2 | 3·6 | 0·1 | 0·0 | 26 | | 9·5 | Nearly as before ; sky milky. |
| | 11 | 615 | 49·1 | 46·9 | 2·2 | 0·0 | 0·0 | 25 | 24 : — : — | 9·5 | Scud ; cirro-strati to N. |
| | 12 | 615 | 47·7 | 45·5 | 2·2 | 0·0 | 0·0 | 20 | | 2·0 | Clear in zenith and to N. |
| | 13 | 29·613 | 45·8 | 43·4 | 2·4 | 0·0 | 0·0 | | | 2·0 | Cirro-strati to N. |
| | 14 | 610 | 45·0 | 44·0 | 1·0 | 0·0 | 0·0 | | | 3·0 | Id. ; stars faint. |
| | 15 | 603 | 46·2 | 44·3 | 1·9 | 0·0 | 0·0 | 20 | — : 28 : — | 4·0 | Cir.-cum., cir.-str., cir. haze ; dense clouds to NW. ☽ |
| | 16 | 585 | 46·4 | 44·7 | 1·7 | 0·1 | 0·0 | 17 | — : 25 : — | 9·0 | Cir.-cum. scud ; cirri to E., tinged with red. |
| | 17 | 584 | 46·9 | 44·7 | 2·2 | 0·1 | 0·0 | 18 | — : 24 : — | 9·9 | Id. ; cir.-str. and cirrous haze to W. |
| | 18 | 574 | 47·7 | 45·7 | 2·0 | 0·0 | 0·0 | 18 | — : 24 : — | 9·9 | Cirro-stratous scud to S. ; cirro-strati to E. and W. |
| | 19 | 561 | 50·3 | 48·0 | 2·3 | 0·0 | 0·0 | 18 | — : 18 : — | 10·0 | Dense wavy cirro-strati and cirro-stratous scud. |
| | 20 | 536 | 53·0 | 50·0 | 3·0 | 0·1 | 0·0 | 16 | — : 22 : — | 10·0 | Id. |
| | 21 | 514 | 57·3 | 53·0 | 4·3 | 0·1 | 0·1 | 20 | 19 : 19 : — | 10·0 | Scud and cirro-strati. |
| | 22 | 499 | 56·8 | 52·3 | 4·5 | 0·3 | 0·1 | 20 | 20 : — : — | 10·0 | Masses of scud ; dense cirro-strati ; loose cumuli to E. |
| | 23 | 470 | 56·9 | 54·0 | 2·9 | 0·2 | 0·0 | | | 10·0 | Dense mass of cirro-stratus and scud. |
| 13 | 0 | 436 | 57·0 | 54·1 | 2·9 | 0·0 | 0·0 | | 18 : 18 : — | 10·0 | Thick scud and cirro-stratus ; rain$^{0·2}$ |
| | 1 | 413 | 57·0 | 56·6 | 0·4 | 0·5 | 0·2 | 17 | 18 : 18 : — | 10·0 | Id. ; rain$^{1}$ |

The direction of the wind is indicated by the number of the point of the compass, reckoning N. = 0, E. = 8, S. = 16, W. = 24. The motions of the three strata of clouds, Sc. (scud), C.-s. (cirro-stratus), and Cir. (cirrus), are indicated in a similar manner.

July 11d 19h. The upper parts of the lower scud moving NW. ½ N.(28½), and the under portions from NW. ½ W. (27½).

| Gött. Mean Time. | | Barometer at 32°. | Thermometers. Dry. | Wet. | Diff. | Wind. Maximum force in 1h. | 10m. | From | Clouds, Sc. : C.-s. : Ci., moving from | Sky clouded. | Species of Clouds and Meteorological Remarks. |
|---|---|---|---|---|---|---|---|---|---|---|---|
| d. | h. | in. | ° | ° | ° | lbs. | lbs. | pt. | pt. pt. pt. | 0—10. | |
| 13 | 2 | 29·371 | 58·4 | 56·8 | 1·6 | 0·5 | 0·3 | 18 | 19 : 19 : — | 10·0 | Thick scud and cirro-stratus; rain$^{0\cdot2}$ |
| | 3 | 330 | 56·2 | 54·9 | 1·3 | 0·5 | 0·1 | 18 | 18 : 18 : — | 10·0 | Id.; rain$^{1}$ |
| | 4 | 277 | 56·7 | 55·2 | 1·5 | 0·3 | 0·1 | 17 | 18 : 18 : — | 10·0 | Id.; rain$^{2}$ |
| | 5 | 216 | 54·9 | 53·6 | 1·3 | 0·1 | 0·1 | 14 | 16 : — : — | 10·0 | Patches of loose scud; dense clouds above; rain$^{3}$ |
| | 6 | 142 | 53·0 | 52·4 | 0·6 | 0·0 | 0·3 | 8 | 14 : — : — | 10·0 | Thick scud; rain$^{3}$ |
| | 7 | 074 | 53·3 | 52·2 | 1·1 | 0·4 | 0·1 | 8 | 13 : — : — | 10·0 | Id.; rain$^{2}$ |
| | 8 | 29·023 | 55·6 | 53·6 | 2·0 | 0·4 | 0·0 | 16 | 20 : 24 : — | 9·3 | Scud in two currents; loose cirro-cumuli above. |
| | 9 | 28·996 | 56·1 | 55·3 | 0·8 | 0·1 | 0·2 | 20 | 23 : 24 : — | 8·5 | Loose scud and cumuli; cirro-cumulous scud; showers. |
| | 10 | 977 | 55·5 | 54·7 | 0·8 | 0·2 | 0·2 | 22 | 23 : 22 : — | 7·0 | Scud; cirro-stratous scud; loose cumuli on horizon. |
| | 11 | 969 | 53·7 | 52·7 | 1·0 | 0·2 | 0·2 | 20 | 22 : — : — | 1·0 | Loose scud and cirro-stratous scud near horizon. |
| | 12 | 28·959 | 53·2 | 52·0 | 1·2 | 0·1 | 0·1 | 21 | 23 : — : — | 2·5 | Scud; at 12h 35m barometer 28·945. |
| 14 | 0 | 29·135 | ... | ... | ... | 2·6 | 2·2 | 30 | | ..... | Sunday—showers A.M. and P.M. |
| | 5 | 377 | ... | ... | ... | ... | ... | | | ..... | Cir.-str. and scud during the day, with occasional sunshine. |
| | 13 | 29·479 | 48·3 | 47·6 | 0·7 | 2·9 | 0·0 | | 24 : — : — | 2·5 | Loose scud; cir.-str. to N.; rain about 10h or 11h. |
| | 14 | 479 | 44·8 | 44·6 | 0·2 | 0·0 | 0·0 | 18 | | 1·0 | Scud to E.; cirro-strati and cirri to N. |
| | 15 | 472 | 43·4 | 43·3 | 0·1 | 0·0 | 0·0 | 20 | | 0·5 | Cirro-strati to E. and N.; cirri to N.; heavy dew. |
| | 16 | 474 | 41·3 | 41·1 | 0·2 | 0·0 | 0·0 | | | 0·5 | Scud and cumuli; patches of cirro-strati to W. |
| | 17 | 494 | 41·6 | 41·0 | †0·6 | 0·0 | 0·0 | 20 | 22 : — : 22 | 0·8 | Cirri and cirrous haze; scud, cirro-strati; stratus. |
| | 18 | 492 | 44·3 | 43·4 | 0·9 | 0·1 | 0·0 | 22 | — : 24 : 24 | 3·5 | Cirro-strati, woolly cirri; scud on Cheviot. |
| | 19 | 502 | 47·0 | 45·8 | 1·2 | 0·0 | 0·0 | 20 | — : — : 22 | 8·5 | Woolly and diffuse cirri; cir.-str. cum. on S. hor. ⊖ |
| | 20 | 494 | 50·5 | 48·4 | 2·1 | 0·0 | 0·0 | 24 | — : 23 : — | 8·8 | Cir.-cum. scud; woolly and diffuse cirri; cir. haze. ⊖ |
| | 21 | 489 | 53·4 | 49·2 | ↓4·2 | 0·1 | 0·1 | 20 | 23 : — : — | 9·9 | Scud; loose cumuli on hor.; cir.-str.; rain$^{1}$ at 21h 15m. |
| | 22 | 499 | 51·8 | 50·1 | 1·7 | 0·1 | 0·0 | 20 | 23 : — : — | 10·0 | As before. |
| | 23 | 504 | 51·8 | 50·2 | 1·6 | 0·1 | 0·0 | 18 | | 10·0 | Scud; cirro-stratus; rain$^{0\cdot5-1\cdot0}$ |
| 15 | 0 | 496 | 56·2 | 52·6 | 3·6 | 0·0 | 0·0 | 24 | 18 : — : — | 9·9 | Scud and loose cumuli; cirro-strati and cirri. ⊖ |
| | 1 | 499 | 60·9 | 54·7 | 6·2 | 0·0 | 0·0 | 24 | 19 : — : — | 10·0 | As before; clouds moving very slowly. |
| | 2 | 513 | 53·9 | 50·8 | 3·1 | 0·7 | 0·7 | 30 | 26 : 23 : — | 9·5 | Scud; mass of woolly cirro-strati; rain$^{0\cdot2}$ ● |
| | 3 | 521 | 54·9 | 50·0 | 4·9 | 0·5 | 0·5 | 28 | 25 : — : — | 9·5 | Id.; id. ● |
| | 4 | 527 | 57·3 | 50·9 | 6·4 | 0·3 | 0·2 | 29 | 26 : — : — | 9·5 | Id.; id. ◐ |
| | 5 | 536 | 57·8 | 50·8 | 7·0 | 0·4 | 0·3 | 30 | 31 : 26 : — | 7·5 | Loose cum.; cir.-cum.-str.; cum.-str. on E. hor. ⊙ |
| | 6 | 544 | 59·6 | 52·3 | †7·3 | 0·2 | 0·1 | 30 | 29 : 30 : 30 | 3·5 | Cumuli; cirro-strati and masses of cirri. ⊙ |
| | 7 | 549 | 57·3 | 50·3 | 7·0 | 0·4 | 0·0 | 31 | 29 : — : — | 4·0 | Scud and cumuli. ⊙ |
| | 8 | 574 | 52·0 | 49·5 | ↓2·5 | 0·7 | 0·3 | 20 | | 9·0 | Id.; rain$^{3-6}$, with hail from 7h 55m till 8h 12m, rainbow. |
| | 9 | 585 | 50·1 | 49·1 | 1·0 | 0·1 | 0·0 | 28 | 26 : — : — | 3·5 | Scud; cum.-str. on horizon. |
| | 10 | 602 | 49·3 | 47·1 | 2·2 | 0·0 | 0·0 | 24 | | 1·0 | Cirro-stratous scud; cumulo-strati on E. horizon. |
| | 11 | 622 | 45·0 | 44·0 | 1·0 | 0·0 | 0·0 | 20 | | 0·5 | Cirro-strati and scud on S. and E. horizon. |
| | 12 | 633 | 47·2 | 45·2 | 2·0 | 0·0 | 0·0 | 20 | | 0·2 | Patches of cirro-strati, scud, and cumuli. |
| | 13 | 29·636 | 45·1 | 44·1 | 1·0 | 0·0 | 0·0 | 18 | | 0·2 | Patches of cirro-strati, scud, and cumuli. |
| | 14 | 630 | 46·0 | 44·8 | 1·2 | 0·2 | 0·1 | 22 | 24 : — : — | 5·0 | Scud. |
| | 15 | 636 | 45·8 | 44·8 | 1·0 | 0·1 | 0·0 | 20 | — : 26 : — | 5·0 | Cirro-cumulous scud; cirro-strati and loose scud. |
| | 16 | 644 | 47·5 | 45·5 | 2·0 | 0·2 | 0·1 | 18 | — : — : 28 | 1·5 | Woolly cirri; id. |
| | 17 | 651 | 43·2 | 42·4 | †0·8 | 0·1 | 0·0 | 20 | — : 29 : — | 4·0 | Cir.-str. scud; cir.-str.; cum.-str. on N. and E. hor. |
| | 18 | 663 | 48·1 | 46·1 | 2·0 | 0·1 | 0·1 | 21 | — : 26 : — | 1·5 | Id.; cirro-strati and cumuli on horizon. ⊙ |
| | 19 | 673 | 49·9 | 47·4 | 2·5 | 0·2 | 0·1 | 22 | | 0·5 | Patches of scud; cirro-strati on horizon. ⊙ |
| | 20 | 678 | 53·1 | 49·3 | 3·8 | 0·5 | 0·5 | 24 | 26 : — : — | 1·5 | Masses of loose scud and cumuli; cirro-strati. ⊙ |
| | 21 | 680 | 55·8 | 50·8 | ↓5·0 | 0·3 | 0·2 | 23 | 28 : — : — | 2·5 | Loose scud and ragged-edged cumuli. |
| | 22 | 683 | 58·1 | 51·2 | 6·9 | 0·4 | 0·4 | 26 | 25 : — : — | 6·0 | Loose cumuli; nimbus to SSW. ⊙ |
| | 23 | 684 | 59·4 | 51·2 | 8·2 | 0·3 | 0·3 | 27 | 26 : — : — | 4·0 | Cumuli; id. ⊙ |
| 16 | 0 | 685 | 59·5 | 52·0 | 7·5 | 0·5 | 0·2 | 30 | 25 : — : — | 7·0 | Loose cumuli, cumulo-strati, and nimbi to S. |
| | 1 | 689 | 61·7 | 52·7 | 9·0 | 0·3 | 0·1 | 22 | 26 : — : — | 3·5 | Cumuli; nimbi and cumulo-strati to S. ⊙ |
| | 2 | 693 | 62·9 | 53·8 | 9·1 | 0·5 | 0·6 | 30 | 26 : — : — | 7·0 | Cum. having an internal motion; cum.-str., nimbi. ⊙ |
| | 3 | 696 | 63·2 | 54·6 | 8·6 | 0·7 | 0·3 | 24 | 26 : — : — | 5·0 | Cumuli; cirro-strati, cirri, dense cum.-str., nimbi. ⊙ |
| | 4 | 694 | 65·1 | 54·1 | 11·0 | 0·4 | 0·3 | 30 | 22 : 26 : 24 | 8·5 | Thick scud; cum.; patch of cir.-str.; cum.-str., nimbi. |
| | 5 | 694 | 61·5 | 53·1 | 8·4 | 0·2 | 0·0 | 0 | 26 : — : — | 7·0 | Loose cumuli, piles of cumulo-strati and nimbi. ⊖ |
| | 6 | 695 | 61·2 | 52·9 | †8·3 | 0·3 | 0·5 | 31 | 21 : 28 : — | 7·5 | Thick scud; cumuli; cum.-str. and cir.-str on hor. |

July 13d 3h 30m. New floss silk put on wet-bulb thermometer.
July 14d 5h. The observation made at 5h 20m.
July 15d 21h. Loose scud and ragged-edged cumuli which get into patches and ultimately disappear on approaching the zenith.
July 16d 5h. Immense piles of cumulo-strati and nimbi on horizon; one great nimbus extending from N., round by E. to SW; electric-looking throughout the day.

| Gött. Mean Time. | Barometer at 32°. | Thermometers. Dry. | Wet. | Diff. | Wind. Maximum force in 1h. | 10m. | From | Clouds, Sc. : C.-s. : Ci., moving from | Sky clouded. | Species of Clouds and Meteorological Remarks. |
|---|---|---|---|---|---|---|---|---|---|---|
| d. h. | in. | ° | ° | ° | lbs. | lbs. | pt. | pt. pt. pt. | 0—10. | |
| 16 7 | 29·698 | 60·6 | 52·1 | 8·5 | 0·6 | 0·3 | 31 | | 1·5 | Cum.-str. and nimbi on hor.; a few large hailstones. ⊙ |
| 8 | 714 | 56·0 | 50·9 | ↓5·1 | 0·3 | 0·0 | 28 | | 2·0 | Id. ⊙ |
| 9 | 727 | 53·8 | 49·8 | 4·0 | 0·0 | 0·0 | 20 | 20 : 25 : — | 3·0 | Thick scud; thin cir.-cum. scud; cum.-str. on hor. |
| 10 | 745 | 49·8 | 47·2 | 2·6 | 0·0 | 0·0 | 12 | | 1·0 | Scud, cirro-strati, sheet of woolly cirri; cumulo-strati. |
| 11 | 751 | 48·1 | 46·0 | 2·1 | 0·0 | 0·0 | 20 | | 0·8 | Cirro-strati and cirri radiating from NW. |
| 12 | 757 | 45·6 | 44·7 | 0·9 | 0·1 | 0·0 | 14 | | 1·0 | Id.; scud. |
| 13 | 29·760 | 44·8 | 44·1 | 0·7 | 0·1 | 0·0 | 20 | | 2·0 | Cirro-strati, cirro-cumuli, and cirri. |
| 14 | 759 | 42·9 | 42·7 | 0·2 | 0·0 | 0·0 | 18 | | 0·8 | Cirro-strati and cirri. |
| 15 | 758 | 41·4 | 41·0 | 0·4 | 0·0 | 0·0 | 18 | — : 26 : 26 | 1·8 | Loose cirro-strati and cirri. |
| 16 | 747 | 39·7 | 39·5 | 0·2 | 0·0 | 0·0 | | — : 26 : — | 2·5 | Cirro-stratous scud; cirri; mist rising from the river. |
| 17 | 742 | 40·2 | 39·9 | †0·3 | 0·0 | 0·0 | 14 | — : 24 : — | 1·5 | As before; fine cirri radiating from W. ⊖ |
| 18 | 745 | 43·8 | 42·9 | 0·9 | 0·0 | 0·0 | 20 | — : 25 : — | 4·0 | Loose cir.-cum.; fine woolly, mottled, and linear cirri. ⊙ |
| 19 | 740 | 50·7 | 47·5 | 3·2 | 0·0 | 0·0 | 20 | — : 26 : — | 8·0 | As before. ⊖ |
| 20 | 739 | 54·6 | 51·7 | 2·9 | 0·2 | 0·1 | 20 | — : 26 : — | 9·5 | Id.; patches of scud to S. ◐ |
| 21 | 725 | 56·9 | 52·9 | ↓4·0 | 0·3 | 0·2 | 20 | — : 22 : — | 6·0 | Cirri, cir.-str., and cir.-cum.; cum. and scud on hor. ⊙ |
| 22 | 712 | 61·2 | 55·2 | 6·0 | 0·3 | 0·3 | 18 | 24 : 25 : 25 | 8·5 | Loose cum. and sc.; curled and woolly cir.; cum.-str. ⊖ |
| 23 | 697 | 61·1 | 53·7 | 7·4 | 0·1 | 0·1 | 23 | 22 : — : — | 9·0 | Scud; cumuli as before. ⊖ |
| 17 0 | 688 | 64·2 | 58·6 | 5·6 | 0·3 | 0·1 | 18 | 24 : — : — | 9·9 | Id.; cumuli, cumulo-strati, and cirro-strati. |
| 1 | 688 | 60·0 | 54·1 | 5·9 | 0·1 | 0·1 | 28 | 23 : — : — | 9·9 | Id.; loose cumuli, cirri; a few drops of rain. |
| 2 | 680 | 64·2 | 55·9 | 8·3 | 0·5 | 0·5 | 20 | — : 24 : — | 9·0 | Cirro-cumulo-strati; scud and cumuli on horizon. ◐ |
| 3 | 669 | 61·7 | 54·2 | 7·5 | 0·5 | 0·4 | 24 | 24 : — : — | 9·5 | Scud and loose cumuli; cumulo-strati and cirro-strati. |
| 4 | 655 | 62·0 | 54·5 | 7·5 | 0·2 | 0·0 | 23 | 24 : — : — | 9·9 | Id.; id. |
| 5 | 636 | 62·5 | 55·2 | 7·3 | 0·2 | 0·1 | 24 | 21 : — : 18 | 9·8 | Scud; cirri, cir.-str., cum.-str., nimbi; rain to NW. |
| 6 | 638 | 54·6 | 53·2 | 1·4 | 0·3 | 0·0 | 16 | 20 : — : — | 10·0 | Id.; nimbi, cirro-strati; rain[3] |
| 7 | 632 | 52·9 | 51·8 | 1·1 | 0·3 | 0·0 | 24 | 21 : — : — | 10·0 | Id.; cir.-str. scud; loose cumuli, cir.-str.; showers. |
| 8 | 617 | 53·2 | 52·8 | 0·4 | 0·0 | 0·0 | 22 | 21 : — : — | 9·9 | Id.; cum., cum-str., cirri; greenish sky; showers. |
| 9 | 606 | 51·9 | 50·4 | 1·5 | 0·0 | 0·0 | 20 | — : 23 : 23 | 9·8 | Woolly cirri, cirro-strati, scud; showers. |
| 10 | 594 | 51·2 | 50·3 | 0·9 | 0·1 | 0·0 | 18 | | 9·9 | Scud; rain[0·5] |
| 11 | 586 | 50·0 | 49·2 | 0·8 | 0·1 | 0·0 | 20 | | 10·0 | Id.; cirro-strati. |
| 12 | 579 | 50·8 | 49·6 | 1·2 | 0·1 | 0·0 | | | 10·0 | Id.; id. |
| 13 | 29·561 | 49·9 | 49·2 | 0·7 | 0·0 | 0·0 | | | 9·7 | Scud; cirro-strati. |
| 14 | 549 | 49·7 | 49·0 | 0·7 | 0·0 | 0·0 | | | 9·8 | Id.; id. |
| 15 | 531 | 49·8 | 49·0 | 0·8 | 0·1 | 0·0 | 22 | | 9·9 | Id.; id. |
| 16 | 518 | 50·0 | 49·2 | 0·8 | 0·0 | 0·0 | 20 | 30 : — : — | 10·0 | Id.; id.; drops of rain. |
| 17 | 513 | 50·3 | 49·2 | 1·1 | 0·0 | 0·0 | 23 | 26 : — : — | 9·9 | Id.; id.; id. |
| 18 | 505 | 51·2 | 49·9 | 1·3 | 0·0 | 0·0 | 20 | 28 : — : — | 9·8 | Id.; id.; id. |
| 19 | 502 | 54·5 | 51·0 | †3·5 | 0·0 | 0·0 | 20 | — : 23 : — | 9·8 | Irregular mass of cir.-str.; patches of scud on hor. ⊙ |
| 20 | 500 | 55·2 | 51·9 | 3·3 | 0·0 | 0·0 | 20 | — : 26 : — | 9·8 | Id.; id. |
| 21 | 489 | 58·8 | 53·3 | ↓5·5 | 0·1 | 0·0 | 21 | | 9·9 | Patches of scud to E.; cirro-strati; drops of rain. ● |
| 22 | 484 | 60·4 | 54·4 | 6·0 | 0·1 | 0·0 | 24 | — : 24 : — | 9·9 | Cirro-cumulous scud; loose cumuli on horizon. ⊖ |
| 23 | 478 | 62·5 | 54·0 | 8·5 | 0·2 | 0·2 | 28 | 24 : — : — | 9·9 | Scud; loose cumuli; cirri and cirro-strati to N. |
| 18 0 | 468 | 61·1 | 51·3 | 9·8 | 0·5 | 0·2 | 23 | 24 : — : — | 9·8 | Scud and loose cumuli; cirri and cirro-strati. ⊖ |
| 1 | 462 | 63·8 | 54·2 | 9·6 | 0·4 | 0·2 | 1 | — : 24 : — | 9·5 | Cirro-cumulous scud; cirri; loose cumuli. ⊖ |
| 2 | 455 | 63·5 | 53·5 | 10·0 | 0·2 | 0·0 | 26 | 26 : — : — | 9·5 | Scud and loose cumuli; fine woolly cirri and cir. haze ◐ |
| 3 | 447 | 60·1 | 52·9 | 7·2 | 0·2 | 0·0 | 28 | 28 : — : — | 10·0 | Thick scud; cirrous haze; cumulo-strati. |
| 4 | 440 | 59·7 | 54·0 | 5·7 | 0·2 | 0·1 | 2 | 26 : 26 : — | 9·8 | Scud, cir.-str. scud; cir.-str., cum.-str.; haze.* ● |
| 5 | 440 | 57·7 | 53·2 | 4·5 | 0·3 | 0·4 | 2 | 28 : 7 : — | 10·0 | Scud in var. currents; nimbi, cir-str.; thunder to NW.* |
| 6 | 441 | 52·6 | 52·0 | 0·6 | 0·4 | 0·0 | 8 | 26 : 8 : — | 9·9 | Patches of loose scud; dense cir.-str.; thunder; rain[2-4]* |
| 7 | 445 | 54·3 | 53·0 | 1·3 | 0·1 | 0·0 | 12 | 6, 2, 26 : — | 10·0 | Three cur. of scud; cir.-str., cum.; thunder till 6h 40m. |
| 8 | 448 | 53·9 | 52·9 | 1·0 | 0·0 | 0·0 | 22 | 24, 30, 4 : 2 : — | 10·0 | Loose vapour; two currents of scud; cir.-str.; cum. |
| 9 | 451 | 51·9 | 51·0 | 0·9 | 0·0 | 0·0 | 22 | 2 : — : — | 10·0 | Thick heavy scud; loose scud below; cirro-strati. |
| 10 | 460 | 51·4 | 50·6 | 0·8 | 0·2 | 0·2 | 2 | 3 : — : — | 10·0 | Thick scud. |
| 11 | 469 | 50·1 | 48·8 | 1·3 | 0·3 | 0·4 | 2 | | 10·0 | Id. |
| 12 | 484 | 48·5 | 47·0 | 1·5 | 0·3 | 0·1 | 3 | | 10·0 | Id. |
| 13 | 29·494 | 47·8 | 46·8 | 1·0 | 0·1 | 0·0 | 2 | | 10·0 | Thick scud; rather broken to NNE. |

The direction of the wind is indicated by the number of the point of the compass, reckoning N. = 0, E. = 8, S. = 16, W. = 24. The motions of the three strata of clouds, Sc. (scud), C.-s. (cirro-stratus), and Cir. (cirrus), are indicated in a similar manner.

* See additional meteorological notes after the *Hourly Meteorological Observations*.

| Gött. Mean Time. | Barometer at 32°. | Thermometers. | | | Wind. | | | Clouds, Sc. : C.-s. : Ci., moving from | Sky clouded. | Species of Clouds and Meteorological Remarks. |
|---|---|---|---|---|---|---|---|---|---|---|
| | | Dry. | Wet. | Diff. | Maximum force in 1h. | Maximum force in 10m. | From | | | |
| d. h. | in. | ° | ° | ° | lbs. | lbs. | pt. | pt. pt. pt. | 0—10. | |
| 18 14 | 29·495 | 47·9 | 47·1 | 0·8 | 0·0 | 0·0 | 14 | | 10·0 | Thick scud; rather broken to NNE. |
| 15 | 487 | 48·1 | 47·3 | 0·8 | 0·0 | 0·0 | 24 | | 10·0 | Id.; id. |
| 16 | 477 | 48·1 | 46·7 | 1·4 | 0·0 | 0·0 | 31 | 30 : — : — | 10·0 | Scud; cirrous haze to NNE. [on Cheviot. |
| 17 | 485 | 47·9 | 46·5 | 1·4 | 0·0 | 0·0 | 30 | 30 : — : — | 10·0 | Thick muddy scud; cirri and cir. haze to NE., strati |
| 18 | 498 | 49·0 | 47·7 | 1·3 | 0·0 | 0·0 | 20 | 30 : — : — | 9·8 | As before; threads of cir.-str. scud forming below. |
| 19 | 511 | 50·3 | 47·6 | 2·7 | 0·0 | 0·0 | 28 | 30 : — : — | 10·0 | Thick cir.-str. scud and wavy cir.-str.; loose scud on Cheviot. |
| 20 | 524 | 52·6 | 49·3 | 3·3 | 0·0 | 0·0 | | 30 : — : — | 9·9 | Thick cir.-str. scud; loose scud to E.; sky to SW. |
| 21 | 531 | 54·0 | 49·5 | 4·5 | 0·0 | 0·0 | 28 | 30 : — : — | 10·0 | Id.; id. |
| 22 | 546 | 52·7 | 50·0 | 2·7 | 0·3 | 0·2 | 28 | 30 : — : — | 10·0 | Loose scud; thick cirro-strati. |
| 23 | 550 | 57·3 | 53·0 | 4·3 | 0·1 | 0·0 | 24 | 30 : 26 : — | 9·9 | Id.; cir.-str. scud; cirri; loose cum. on hor. |
| 19 0 | 559 | 58·3 | 52·2 | 6·1 | 0·2 | 0·1 | 30 | 30 : — : — | 9·9 | Scud and loose cumuli; cir.-cum. scud. |
| 1 | 563 | 57·9 | 50·9 | 7·0 | 0·2 | 0·2 | 1 | 29 : — : — | 9·3 | Id.; cir.-cum., cir.-str., cirri. ⊙ |
| 2 | 567 | 58·5 | 50·8 | 7·7 | 0·3 | 0·0 | 0 | 29 : — : — | 8·0 | Id.; linear and woolly cirri. |
| 3 | 575 | 61·0 | 52·0 | 9·0 | 0·4 | 0·2 | 0 | 29 : — : — | 9·0 | Id.; cir.-cum. scud; woolly cirri. |
| 4 | 579 | 63·0 | 53·2 | 9·8 | 0·4 | 0·6 | 0 | 30 : — : — | 9·0 | Id.; id. ⊖ |
| 5 | 592 | 60·4 | 52·2 | 8·2 | 0·4 | 0·5 | 31 | 30 : — : — | 8·0 | Id.; cir.-cum.-str.; rainbow. ◐ |
| 6 | 604 | 58·1 | 51·0 | 7·1 | 0·5 | 1·0 | 30 | 30 : — : — | 9·2 | Scud, loose cumuli, cumulo-strati; rain[2] at 6h 8m. |
| 7 | 633 | 55·0 | 51·3 | 3·7 | 0·8 | 0·1 | 30 | 29 : — : — | 9·0 | Id., id., id. ⊖ |
| 8 | 648 | 52·9 | 50·2 | 2·7 | 0·4 | 0·0 | 30 | 30 : — : — | 9·7 | Id.; cirro-cumulous scud; rain[2] |
| 9 | 667 | 51·8 | 50·4 | 1·4 | 0·0 | 0·0 | | 29 : — : — | 7·0 | Id., tinged red to SE.; loose scud on Cheviot. |
| 10 | 693 | 51·2 | 49·7 | 1·5 | 0·1 | 0·0 | 30 | 29 : — : — | 9·8 | Id. |
| 11 | 709 | 51·0 | 49·0 | 2·0 | 0·0 | 0·0 | 30 | | 6·0 | Id.; cirri to N. |
| 12 | 724 | 49·0 | 47·2 | 1·8 | 0·0 | 0·0 | 30 | | 8·0 | Id. |
| 13 | 29·740 | 49·8 | 47·0 | 2·8 | 0·1 | 0·0 | | | 9·0 | Scud. |
| 14 | 750 | 49·0 | 48·0 | 1·0 | 0·0 | 0·0 | 28 | | 9·9 | Id.; sky to NE. |
| 15 | 757 | 49·1 | 48·1 | 1·0 | 0·0 | 0·0 | 25 | 28 : — : — | 9·0 | Id.; cirri and cirro-strati to NE. |
| 16 | 769 | 47·9 | 47·2 | 0·7 | 0·0 | 0·0 | 23 | 30 : — : — | 5·0 | Cirro-cumulous scud; cirri and cirro-strati; loose scud. |
| 17 | 798 | 45·7 | 44·8 | †0·9 | 0·0 | 0·0 | 25 | | 1·0 | Cumuli and cumulo-strati; scud on Cheviot. ⊙ |
| 18 | 820 | 46·9 | 45·8 | 1·1 | 0·0 | 0·0 | 25 | — : 26 : — | 1·0 | Cirro-cumuli; scud on Cheviot and on horizon. ⊙ |
| 19 | 828 | 49·7 | 47·2 | 2·5 | 0·3 | 0·2 | 30 | | 0·5 | Cirro-cumulous scud and loose cumuli to NE. ⊙ |
| 20 | 848 | 52·6 | 48·7 | 3·9 | 0·3 | 0·2 | 0 | | 0·8 | Loose cumuli and masses of cirro-strati. ⊙ |
| 21 | 865 | 54·4 | 48·9 | ↓5·5 | 0·2 | 0·2 | 0 | 28 : — : — | 9·7 | Loose cumuli; loose cir.-cum. and cir.-cum.-str. ⊖ |
| 22 | 872 | 56·7 | 49·3 | 7·4 | 0·3 | 0·2 | 3 | 28 : — : — | 7·0 | Id.; cirro-cumulous scud. ⊙ |
| 23 | 890 | 57·0 | 50·0 | 7·0 | 0·3 | 0·2 | 2 | 28 : — : — | 8·0 | Id.; id. ⊖ |
| 20 0 | 907 | 60·0 | 52·4 | 7·6 | 0·3 | 0·2 | 9 | 27 : — : — | 8·0 | Scud and loose cumuli. ⊙ |
| 1 | 920 | 59·6 | 52·3 | 7·3 | 0·3 | 0·1 | 8 | 27 : — : — | 9·5 | Id.; cirro-strati to NE. ⊖ |
| 2 | 936 | 63·7 | 55·2 | 8·5 | 0·1 | 0·1 | 6 | 27 : — : — | 7·0 | Id.; id. |
| 3 | 941 | 60·4 | 52·6 | 7·8 | 0·2 | 0·1 | 2 | 25 : — : 28 | 5·0 | Id.; woolly and linear cirri. ⊙ |
| 4 | 940 | 60·4 | 52·0 | 8·4 | 0·1 | 0·1 | 12 | 24 : — : 28 | 3·0 | As before; solar halo at 3h 30m. ⊙ |
| 5 | 935 | 61·3 | 52·2 | 9·1 | 0·1 | 0·0 | 6 | 22 : — : 28 | 3·0 | Id. ⊙ |
| 6 | 940 | 59·4 | 52·7 | †6·7 | 0·2 | 0·1 | 4 | 24 : — : — | 3·0 | Scud and loose cumuli; cirri. ● |
| 7 | 945 | 57·8 | 51·5 | 6·3 | 0·4 | 0·4 | 4 | — : 23 : 30 | 7·0 | Cirro-cumulous scud; fine cirri. ● |
| 8 | 969 | 55·3 | 50·9 | 4·4 | 0·2 | 0·1 | 4 | 22 : — : — | 9·0 | Scud; cirrous clouds. |
| 9 | 967 | 52·0 | 48·9 | ↓3·1 | 0·2 | 0·0 | 4 | | 2·0 | Cirro-cumulous scud to W., tinged with red; cirri. |
| 10 | 976 | 51·4 | 48·4 | 3·0 | 0·3 | 0·2 | 16 | 24 : — : — | 3·0 | Scud; cirro-cumuli; woolly cirri; cirro-strati. |
| 11 | 976 | 50·2 | 47·6 | 2·6 | 0·3 | 0·2 | 16 | — : 28 : — | 7·0 | Cirro-cumuli; cirri. |
| 12 | 982 | 49·9 | 47·6 | 2·3 | 0·2 | 0·0 | 17 | | 8·5 | Cirro-strati and cirro-cumuli. |
| 23 | 29·928 | ... | ... | ... | 0·5 | ... | 18 | 18 : — : — | ..... | Scud; rain[1-3] from 20h till about 2h. |
| 21 13 | 29·892 | 59·0 | 57·5 | 1·5 | 1·2 | 0·1 | 21 | | 10·0 | Scud; rather dark. |
| 14 | 887 | 58·6 | 57·5 | 1·1 | 0·3 | 0·3 | 20 | | 10·0 | Id. |
| 15 | 891 | 58·3 | 57·5 | 0·8 | 0·3 | 0·0 | 16 | | 10·0 | Id. |
| 16 | 877 | 58·3 | 57·3 | 1·0 | 0·0 | 0·0 | 17 | | 10·0 | Id., nearly uniform. |
| 17 | 867 | 58·3 | 57·3 | 1·0 | 0·1 | 0·1 | 19 | 20 : — : — | 10·0 | Id. |
| 18 | 869 | 59·0 | 57·5 | 1·5 | 0·3 | 0·2 | 20 | 20 : — : — | 10·0 | Id.; cirro-stratus. |
| 19 | 876 | 60·7 | 58·4 | 2·3 | 0·4 | 0·3 | 20 | 20 : — : — | 10·0 | Id. |

The direction of the wind is indicated by the number of the point of the compass, reckoning N. = 0, E. = 8, S. = 16, W. = 24. The motions of the three strata of clouds, Sc. (scud), C.-s. (cirro-stratus), and Cir. (cirrus), are indicated in a similar manner.

| Gött. Mean Time. | Barometer at 32°. | Thermometers. Dry. | Wet. | Diff. | Wind. Maximum force in 1h. | 10m. | From | Clouds, Sc. : C.-s. : Ci., moving from | Sky clouded. | Species of Clouds and Meteorological Remarks. |
|---|---|---|---|---|---|---|---|---|---|---|
| d. h. | in. | ° | ° | ° | lbs. | lbs. | pt. | pt. pt. pt. | 0—10. | |
| 21 20 | 29·885 | 62·2 | 59·4 | 2·8 | 0·4 | 0·4 | 20 | 20 : — : — | 10·0 | Scud ; cirro-stratus. |
| 21 | 885 | 63·7 | 60·0 | 3·7 | 0·9 | 0·5 | 21 | 20 : — : — | 9·8 | Id. |
| 22 | 885 | 66·3 | 61·7 | 4·6 | 1·4 | 0·8 | 20 | 20 : — : — | 9·5 | Loose scud. ⊖ |
| 23 | 873 | 65·8 | 61·7 | 4·1 | 1·3 | 0·3 | 21 | 20 : — : — | 3·0 | Id. ⊙ |
| 22 0 | 874 | 67·9 | 63·0 | 4·9 | 0·5 | 0·2 | 20 | 20 : — : — | 0·5 | Masses of loose scud ; cirro-strati on E. horizon. ⊙ |
| 1 | 877 | 66·6 | 60·9 | 5·7 | 0·8 | 0·1 | 20 | | 0·5 | Cumuli on E. and N. horizon. ⊙ |
| 2 | 865 | 68·2 | 60·0 | 8·2 | 1·3 | 0·9 | 20 | | 0·5 | Id. ⊙ |
| 3 | 860 | 70·3 | 61·7 | 8·6 | 0·6 | 0·3 | 20 | | 0·2 | A few cumuli low on E. horizon ; very clear. ⊙ |
| 4 | 846 | 72·1 | 62·0 | 10·1 | 0·6 | 0·6 | 20 | | 0·0 | A single patch of cumuli to E. ; very clear. ⊙ |
| 5 | 837 | 71·0 | 61·6 | †9·4 | 0·5 | 0·3 | 20 | | 0·0 | Perfectly clear. ⊙ |
| 6 | 828 | 70·2 | 60·3 | 9·9 | 0·3 | 0·2 | 19 | | 0·0 | Id. ⊙ |
| 7 | 830 | 68·3 | 58·1 | 10·2 | 0·4 | 0·2 | 19 | | 0·0 | Id. ⊙ |
| 8 | 835 | 66·0 | 58·9 | ↓7·1 | 0·2 | 0·0 | 20 | | 0·0 | Id. ⊙ |
| 9 | 841 | 60·2 | 56·3 | 3·9 | 0·0 | 0·0 | 15 | | 0·0 | Id. ☽ |
| 10 | 824 | 58·8 | 56·8 | 2·0 | 0·0 | 0·0 | 20 | | 0·0 | Id. ☽ |
| 11 | 827 | 54·6 | 53·3 | 1·3 | 0·3 | 0·0 | 24 | | 0·0 | Id. |
| 12 | 831 | 52·0 | 51·4 | 0·6 | 0·0 | 0·0 | | | 0·0 | Id. |
| 13 | 29·833 | 50·3 | 49·9 | 0·4 | 0·0 | 0·0 | | | 0·0 | Perfectly clear. |
| 14 | 821 | 49·2 | 48·8 | 0·4 | 0·0 | 0·0 | | | 0·2 | Patches of cloud to SW. ; cirro-strati and haze to E. |
| 15 | 819 | 48·2 | 48·0 | 0·2 | 0·0 | 0·0 | 22 | | 0·3 | Cir.-str., cir.-cum. ; brown haze on E. hor. ; much dew. |
| 16 | 807 | 47·8 | 47·6 | 0·2 | 0·0 | 0·0 | 20 | | 0·5 | Cirri and cirrous haze on hor. ; cirro-strati to NW. |
| 17 | 797 | 47·2 | 47·0 | 0·2 | 0·0 | 0·0 | 20 | | 0·5 | Cirri, cirrous haze, and thin cirro-strati on hor. ⊙ |
| 18 | 789 | 48·9 | 48·4 | †0·5 | 0·0 | 0·0 | | | 0·5 | Cirro-strati to SW. ; cirrous haze on horizon. ⊙ |
| 19 | 801 | 52·0 | 50·8 | 1·2 | 0·0 | 0·0 | | | 0·5 | Id. ; id. ⊙ |
| 20 | 795 | 56·4 | 54·0 | 2·4 | 0·0 | 0·0 | 24 | | 0·2 | Id. ; id. ⊙ |
| 21 | 786 | 60·7 | 57·2 | ↓3·5 | 0·0 | 0·0 | 4 | | 0·5 | Haze on horizon ; cirro-strati to W. and SW. ⊙ |
| 22 | 770 | 65·9 | 60·0 | 5·9 | 0·0 | 0·0 | 7 | | 0·7 | Id. ; id. ⊙ |
| 23 | 765 | 70·8 | 63·2 | 7·6 | 0·0 | 0·9 | 7 | — : — : 16 | 2·5 | Woolly cirri ; cumuli and haze on horizon. ⊙ |
| 23 0 | 752 | 77·2 | 65·0 | 12·2 | 0·2 | 0·6 | 14 | | 2·0 | Cirri and cir. haze ; cum.-str. and cir.-str. ; very hazy. ⊙ |
| 1 | 740 | 78·8 | 67·2 | 11·6 | 0·4 | 0·2 | 14 | — : — : 15 | 4·0 | Id. ; id. ; id. ◐ |
| 2 | 730 | 79·0 | 67·6 | 11·4 | 0·4 | 0·2 | 14 | — : 14 : — | 8·0 | Cir.-cum., cir.-str., and general haze ; patches of scud. ◐ |
| 3 | 729 | 78·7 | 67·9 | 10·8 | 0·3 | 0·1 | 17 | 15 : — : — | 9·0 | Scud ; cirri, cirro-strati, and cirrous haze. |
| 4 | 731 | 78·6 | 67·6 | 11·0 | 0·2 | 0·3 | 16 | | 9·0 | As before ; a few drops of rain. |
| 5 | 723 | 76·0 | 67·6 | 8·4 | 0·2 | 0·1 | 12 | — : 16 : 16 | 9·0 | Cir.-cum., cirri, cir.-str. ; electric-looking cloud to W. |
| 6 | 708 | 74·9 | 64·9 | 10·0 | 0·5 | 0·4 | 12 | — : 16 : — | 7·5 | Cirro-strati, cirro-cumuli, and woolly cirri. ⊖ |
| 7 | 711 | 72·1 | 63·2 | 8·9 | 0·3 | 0·2 | 11 | — : 16 : — | 9·0 | Loose cirro-cumuli, cirro-strati, and woolly cirri. ⊙ |
| 8 | 715 | 70·0 | 61·7 | 8·3 | 0·3 | 0·1 | 6 | — : 15 : — | 9·0 | Cirro-cumulous scud, cirro-cumuli, and cirro-strati. ⊖ |
| 9 | 717 | 67·9 | 60·7 | 7·2 | 0·1 | 0·0 | 1 | — : 16 : — | 7·0 | As before ; patches of mottled cirri ; haze to E. |
| 10 | 729 | 63·7 | 59·0 | 4·7 | 0·1 | 0·0 | 24 | — : 16 : — | 7·0 | Id. ; cirri to W. |
| 11 | 725 | 62·9 | 58·9 | 4·0 | 0·0 | 0·0 | | | 8·0 | Cirro-cumulous scud ; cirri and cirro-strati. |
| 12 | 732 | 62·9 | 58·9 | 4·0 | 0·0 | 0·0 | 8 | | 8·0 | Id. ; id. |
| 13 | 29·723 | 62·9 | 57·6 | 5·3 | 0·1 | 0·0 | 10 | | 9·0 | Cirro-cumulous scud ; cirri and cirro-strati. |
| 14 | 717 | 62·1 | 57·7 | 4·4 | 0·1 | 0·0 | 6 | | 9·0 | Id. ; id. |
| 15 | 700 | 60·7 | 56·7 | 4·0 | 0·0 | 0·0 | 23 | — : 14 : — | 8·5 | Cir.-cum., cirri, cir.-str. ; clouds tinged red to E. |
| 16 | 694 | 59·0 | 56·0 | 3·0 | 0·0 | 0·0 | 6 | — : 14 : — | 7·0 | Id., id., id. ; haze on E. horizon. |
| 17 | 699 | 59·1 | 56·0 | †3·1 | 0·0 | 0·0 | 2 | — : 14 : — | 8·0 | Id., cirri, cirrous haze. ◐ |
| 18 | 700 | 59·3 | 56·3 | ↓3·0 | 0·0 | 0·0 | 6 | | 8·0 | Id., cir.-cum.-str., cir.-str., and cir. haze. ⊙ |
| 19 | 711 | 61·3 | 57·9 | 3·4 | 0·0 | 0·0 | 4 | — : 15 : — | 8·5 | Cirro-cumuli, cirro-strati, and cirrous haze. |
| 20 | 716 | 66·1 | 59·7 | 6·4 | 0·1 | 0·0 | 12 | — : 14 : — | 9·0 | As before ; masses of loose cumuli below. |
| 21 | 731 | 66·1 | 60·1 | 6·0 | 0·0 | 0·0 | | — : 14 : — | 9·9 | Thick scud ; cir.-str., cir.-cum., cirri, cirrous haze. |
| 22 | 741 | 65·2 | 60·1 | 5·1 | 0·0 | 0·0 | 25 | — : 14 : — | 10·0 | Thick cir.-str. scud ; cirro.-strati, cirrous haze ; rain0·2 |
| 23 | 752 | 60·9 | 59·9 | 1·0 | 1·0 | 0·2 | 25 | — : 16 : — | 10·0 | Id. ; rain3 since 22h 35m when wind was S. |
| 24 0 | 746 | 60·2 | 60·0 | 0·2 | 0·0 | 0·0 | | | 10·0 | Rain2–4 since 23h. |
| 1 | 754 | 61·1 | 60·6 | 0·5 | 0·1 | 0·1 | 4 | 4 : 12 : — | 10·0 | Two currents of scud ; dense cirro-strati ; rain2 |
| 2 | 757 | 64·4 | 62·2 | 2·2 | 0·1 | 0·0 | 0 | 12 : — : — | 10·0 | Loose scud ; dense cirro-strati. |
| 3 | 759 | 64·9 | 62·7 | 2·2 | 0·0 | 0·0 | 4 | 4 : 12 : — | 10·0 | Id. ; id. |

The direction of the wind is indicated by the number of the point of the compass, reckoning N. = 0, E. = 8, S. = 16, W. = 24. The motions of the three strata of clouds, Sc. (scud), C.-s. (cirro-stratus), and Cir. (cirrus), are indicated in a similar manner.

July 23d 2h 20m. The highest observed reading of the dry thermometer was 81°·9. At 2h 50m a peal of thunder was heard by Sir Thomas Brisbane.

| Gött. Mean Time. | Barometer at 32°. | Thermometers. Dry. | Wet. | Diff. | Wind. Maximum force in 1h. | 10m. | From | Clouds, Sc. : C.-s. : Ci., moving from | Sky clouded. | Species of Clouds and Meteorological Remarks. |
|---|---|---|---|---|---|---|---|---|---|---|
| d. h. | in. | | ° | ° | lbs. | lbs. | pt. | pt. pt. pt. | 0—10. | |
| 24 4 | 29·763 | 62·3 | 60·9 | 1·4 | 0·0 | 0·0 | | 12 : — : — | 10·0 | Loose scud; dense cirro-strati. |
| 5 | 763 | 62·4 | 61·6 | 0·8 | 0·2 | 0·0 | 4 | 14 : — : — | 10·0 | Id. |
| 6 | 755 | 64·7 | 63·1 | 1·6 | 0·1 | 0·1 | 16 | 16 : — : — | 10·0 | Id.; id. |
| 7 | 764 | 65·8 | 63·0 | 2·8 | 0·0 | 0·0 | 7 | 16 : — : — | 10·0 | Id.; woolly cirri. ● |
| 8 | 774 | 63·6 | 62·1 | 1·5 | 0·0 | 0·0 | | 16 : — : — | 10·0 | Id.; cirrous clouds; dull and hazy on horizon. |
| 9 | 783 | 62·4 | 61·8 | 0·6 | 0·0 | 0·0 | | 16 : — : — | 10·0 | Id.; id.; id. |
| 10 | 784 | 61·0 | 60·6 | 0·4 | 0·1 | 0·0 | | | 10·0 | Id. |
| 11 | 792 | 59·1 | 59·0 | 0·1 | 0·0 | 0·0 | 4 | | 7·0 | Scud; hazy. |
| 12 | 792 | 59·0 | 58·8 | 0·2 | 0·0 | 0·0 | | | 9·5 | Id.; very hazy. |
| 13 | 29·786 | 59·0 | 58·8 | 0·2 | 0·0 | 0·0 | 8 | | 10·0 | Scud; very hazy; dark. |
| 14 | 789 | 58·8 | 58·7 | 0·1 | 0·0 | 0·0 | | | 10·0 | Id.; id. |
| 15 | 786 | 58·0 | 57·8 | 0·2 | 0·1 | 0·0 | | | 10·0 | Fog. |
| 16 | 777 | 57·1 | 57·0 | 0·1 | 0·1 | 0·1 | | 4 : — : — | 9·2 | Scud; foggy. |
| 17 | 775 | 56·6 | 56·2 | 0·4 | 0·1 | 0·0 | 2 | 5, 14 : 15 : — | 8·2 | Stratus; smoky scud; cir.-cum. scud and cum. on hor. |
| 18 | 781 | 56·8 | 56·3 | 0·5 | 0·0 | 0·0 | 2 | 6 : 14 : — | 7·5 | Stratus clearing off variously; cir.-cum. and cirri. |
| 19 | 776 | 60·2 | 58·8 | †1·4 | 0·0 | 0·0 | 4 | — : 14 : — | 7·5 | Strati to E.; cumuli and loose cirro-strati. |
| 20 | 773 | 61·4 | 59·5 | 1·9 | 0·0 | 0·0 | 8 | — : 14 : — | 1·8 | Cir.-str. scud, cumuli, cum.-str.; sheets of cirri. ⊙ |
| 21 | 771 | 65·9 | 60·3 | ↓5·6 | 0·1 | 0·1 | 12 | 14 : 15 : — | 6·0 | Loose cumuli; cir.-cum., cir.-str.; tufts of cirri. ● |
| 22 | 757 | 68·2 | 60·0 | 8·2 | 0·2 | 0·3 | 13 | 15 : — : 15 | 6·0 | Scud and loose cumuli; woolly cirri. ⊖ |
| 23 | 752 | 70·6 | 60·7 | 9·9 | 0·7 | 0·9 | 15 | 14 : — : — | 8·5 | Scud, cirri, and cir.-str. to E.; haze on horizon. ● |
| 25 0 | 748 | 73·1 | 62·1 | 11·0 | 0·2 | 0·3 | 15 | 14 : — : — | 9·2 | Scud and ragged cumuli; cirro-strati. |
| 1 | 741 | 70·5 | 61·2 | 9·3 | 1·2 | 0·2 | 10 | 15 : — : — | 9·3 | Id.; id. |
| 2 | 742 | 69·8 | 61·1 | 8·7 | 0·3 | 0·3 | 12 | — : 15 : — | 10·0 | Wavy cir.-str. and cirro-stratous scud; ragged cumuli. |
| 3 | 734 | 69·4 | 60·0 | 9·4 | 0·8 | 0·1 | 12 | — : 15 : — | 9·2 | Id.; |
| 4 | 726 | 70·3 | 61·4 | 8·9 | 0·3 | 0·2 | 8 | — : 12 : — | 9·5 | Id.; cirro-cumuli. |
| 5 | 716 | 68·8 | 59·3 | 9·5 | 0·3 | 0·2 | 9 | — : 14 : — | 9·5 | Thick cirro-stratous scud; cir.-str., cirri, cumulo-strati. |
| 6 | 711 | 69·2 | 58·9 | 10·3 | 0·3 | 0·2 | 10 | 18 : 17 : — | 9·5 | Cirro-stratous scud; cir.-str., piles of ragged cumuli. |
| 7 | 719 | 67·1 | 57·1 | 10·0 | 0·3 | 0·1 | 15 | 15 : — : — | 9·5 | Scud; cirro-strati as before. |
| 8 | 729 | 65·0 | 56·8 | ↓8·2 | 0·1 | 0·1 | 13 | 14 : 16 : 17 | 9·8 | Thin scud; cirro-stratous scud; cirro-cumulo-strati. |
| 9 | 727 | 62·8 | 55·9 | 6·9 | 0·0 | 0·0 | var. | — : 13 : — | 10·0 | Thick cirro-strati and cirro-stratous scud. |
| 10 | 730 | 62·0 | 55·0 | 7·0 | 0·0 | 0·0 | 30 | — : 14 : — | 10·0 | Id.; red to NNE. |
| 11 | 726 | 59·5 | 55·9 | 2·6 | 0·0 | 0·0 | 7 | | 10·0 | Thick scud; rain$^{0·5}$ |
| 12 | 720 | 58·8 | 56·6 | 2·2 | 0·0 | 0·0 | | | 10·0 | Id.; dark. |
| 13 | 29·719 | 58·2 | 56·4 | 1·8 | 0·0 | 0·0 | | | 10·0 | Thick scud; dark; rain$^{0·5}$ |
| 14 | 724 | 56·5 | 55·7 | 0·8 | 0·1 | 0·0 | | | 10·0 | Rain$^{1-4}$ since 13h. |
| 15 | 718 | 56·0 | 55·2 | 0·8 | 0·1 | 0·0 | 28 | | 10·0 | Rain$^{1}$ |
| 16 | 715 | 55·2 | 55·0 | 0·2 | 0·0 | 0·0 | | — : 12 : — | 10·0 | Thick wavy cirro-stratous scud; red on NE. horizon. |
| 17 | 713 | 55·3 | 55·0 | 0·3 | 0·0 | 0·0 | | — : 12 : — | 10·0 | Scud and thick cirro-stratus. |
| 18 | 721 | 56·0 | 55·6 | 0·4 | 0·0 | 0·0 | 16 | — : 12 : — | 10·0 | Id. |
| 19 | 741 | 57·2 | 56·3 | 0·9 | 0·1 | 0·0 | 22 | 12 : — : — | 10·0 | Scud with parallel ridges; cirro-strati; rain$^{0·5}$ |
| 20 | 751 | 58·4 | 57·7 | 0·7 | 0·0 | 0·0 | 16 | | 10·0 | Id.; rain$^{0·2}$ |
| 21 | 760 | 59·3 | 58·1 | 1·2 | 0·0 | 0·0 | | | 10·0 | Scud; rain$^{0·2}$ |
| 22 | 768 | 60·5 | 58·0 | 2·5 | 0·0 | 0·0 | | | 10·0 | Id.; thick scud on Cheviot; rain$^{1}$ |
| 23 | 786 | 62·2 | 58·4 | 3·8 | 0·0 | 0·0 | 14 | | 10·0 | Id.; cirro-strati to W. |
| 26 0 | 796 | 63·3 | 58·7 | 4·6 | 0·0 | 0·0 | 30 | 0 : 24 : — | 9·9 | Loose ragged scud; cirro-stratous scud, cirro-strati. |
| 1 | 801 | 65·3 | 58·2 | 7·1 | 0·0 | 0·1 | 28 | 0 : — : — | 10·0 | As before; loose cumuli on S. horizon. |
| 2 | 814 | 67·7 | 60·5 | 7·2 | 0·1 | 0·1 | 31 | 31 : 28 : — | 10·0 | Scud; cirro-stratous scud; haze. |
| 3 | 825 | 68·3 | 60·6 | 7·7 | 0·1 | 0·1 | 30 | 30 : 26 : — | 9·8 | Loose cumuli; cirro-cumulo-strati; haze. |
| 4 | 832 | 67·4 | 60·0 | 7·4 | 0·1 | 0·0 | 31 | — : 27 : — | 9·8 | Cir.-cum. scud; cumuli, cum.-str.; woolly cirri. ● |
| 5 | 839 | 67·0 | 59·6 | 7·4 | 0·2 | 0·2 | 0 | — : 28 : — | 9·5 | Id.; id., id.; id. |
| 6 | 849 | 65·7 | 59·1 | 6·6 | 0·4 | 0·3 | 31 | — : 28 : — | 10·0 | Masses of scud; cirro-cumulous scud, cirro-strati. |
| 7 | 856 | 64·7 | 59·7 | 5·0 | 0·4 | 0·2 | 31 | 30 : — : — | 9·8 | Scud; cirro-cumulous scud; woolly cirri. |
| 8 | 879 | 62·4 | 59·0 | 3·4 | 0·4 | 0·3 | 23 | — : 28 : — | 10·0 | Cirro-cumulous scud and cirro-cumulo-strati. |
| 9 | 887 | 60·7 | 57·7 | 3·0 | 0·4 | 0·2 | 24 | — : 28 : — | 10·0 | Id. |
| 10 | 897 | 60·0 | 57·5 | 2·5 | 0·2 | 0·1 | 28 | — : 28 : — | 10·0 | Cirro-stratous scud. |
| 11 | 899 | 59·9 | 57·2 | 2·7 | 0·1 | 0·0 | 22 | | 10·0 | Id. |

The direction of the wind is indicated by the number of the point of the compass, reckoning N. = 0, E. = 8, S. = 16, W. = 24. The motions of the three strata of clouds, Sc. (scud), C.-s. (cirro-stratus), and Cir. (cirrus), are indicated in a similar manner.

25d 6h. Thermometer case removed (†) before this observation, and returned (↓), as indicated, after 8h.

| Gött. Mean Time. | Barometer at 32°. | Thermometers. Dry. | Wet. | Diff. | Wind. Maximum force in 1h. | 10m. | From | Clouds, Sc. : C.-s. : Ci., moving from | Sky clouded. | Species of Clouds and Meteorological Remarks. |
|---|---|---|---|---|---|---|---|---|---|---|
| d. h. | in. | ° | ° | ° | lbs. | lbs. | pt. | pt. pt. pt. | 0—10. | |
| 26 12 | 29·904 | 58·7 | 57·2 | 1·5 | 0·0 | 0·0 | 17 | | 10·0 | Scud. |
| 13 | 29·910 | 57·9 | 56·6 | 1·3 | 0·0 | 0·0 | 16 | | 9·8 | Sky in zenith. |
| 14 | 917 | 57·8 | 56·3 | 1·5 | 0·0 | 0·0 | 20 | | 9·0 | A few stars seen in zenith. |
| 15 | 917 | 56·1 | 55·3 | 0·8 | 0·0 | 0·0 | 8 | | 9·0 | Cirro-cumuli; cir.-str. to E.; dense cloud to W. |
| 16 | 919 | 55·0 | 54·3 | 0·7 | 0·0 | 0·0 | 4 | — : 28 : — | 7·0 | Thin scud; cirro-cumulo-strati, cirro-strati. |
| 17 | 937 | 55·7 | 55·0 | 0·7 | 0·0 | 0·0 | 4 | 0 : 0 : — | 8·5 | Id.; very thick scud; id. |
| 18 | 952 | 58·8 | 56·7 | †2·1 | 0·0 | 0·0 | 22 | 0 : — : — | 9·0 | Scud; cir.-str. to W.; loose cum. to S.; haze to E. ◐ |
| 19 | 965 | 59·5 | 57·4 | 2·1 | 0·0 | 0·0 | 22 | — : 0 : — | 9·7 | Thick cirro-cumulo-strati; loose scud to E. |
| 20 | 966 | 61·8 | 58·7 | 3·1 | 0·0 | 0·0 | 24 | — : 0 : — | 9·0 | Cir.-cum.-str. and cirro-cumuli; loose cumuli to E. |
| 21 | 967 | 64·9 | 59·3 | ↓5·6 | 0·1 | 0·1 | 26 | 31 : 27 : — | 9·0 | Scud and loose cumuli; thick sheet of woolly cir.-str. ⊙ |
| 22 | 963 | 67·1 | 60·6 | 6·5 | 0·1 | 0·1 | 26 | — : 28 : — | 9·8 | Scud; cirro-cumulous scud and cirro-cumuli. |
| 23 | 955 | 68·1 | 62·2 | 5·9 | 0·1 | 0·1 | 1 | 1 : 30 : 28 | 7·0 | Two currents of scud; woolly cirri. |
| 27 0 | 969 | 70·4 | 63·9 | 6·5 | 0·0 | 0·0 | 9 | 26 : — : — | 10·0 | Scud. |
| 1 | 963 | 70·7 | 63·9 | 6·8 | 0·1 | 0·0 | 12 | — : 24 : — | 7·0 | Cir.-cum.-str.; large piles of cum.; cum.-str. to N., W., [and S.; nimbi. ⊙ |
| 2 | 958 | 72·0 | 63·7 | 8·3 | 0·1 | 0·0 | 18 | 22 : — : — | 8·5 | Scud and loose cum.; cir.-cum.-str.; rain to NW. |
| 3 | 954 | 71·6 | 65·4 | 6·2 | 0·1 | 0·0 | 20 | — : 24 : — | 8·5 | Cir.-cum. scud; cum., cum.-str., nimbi; woolly cirri. ⊙ |
| 4 | 948 | 72·6 | 65·0 | 7·6 | 0·1 | 0·0 | 12 | — : 22 : — | 7·0 | Id.; loose cum. and cum.-str.; woolly cirri. ⊙ |
| 5 | 940 | 69·7 | 63·0 | 6·7 | 0·0 | 0·0 | | 22 : — : — | 9·0 | Thick scud; loose cum., cir.-st., woolly cir.; drops of rain. |
| 6 | 936 | 69·9 | 64·5 | 5·4 | 0·1 | 0·0 | 20 | — : — : 28 | 6·5 | Curled and woolly cirri; cum. and cum.-str. on hor. ⊖ |
| 7 | 937 | 68·0 | 61·3 | †6·7 | 0·1 | 0·1 | 20 | 24 : — : 27 | 8·5 | Scud; diffuse cirri; cirro-cumuli rad. from N by W.; [cum.-str. ◐ |
| 8 | 947 | 65·0 | 61·5 | 3·5 | 0·2 | 0·1 | 23 | — : 28 : — | 7·5 | Cir.-cum.; cirri; cir.-str. on hor. |
| 9 | 955 | 62·3 | 59·0 | ↓3·3 | 0·4 | 0·2 | 23 | — : 28 : — | 7·0 | Id.; diffuse cirri and cirro-strati. ☽ |
| 10 | 954 | 59·4 | 57·2 | 2·2 | 0·2 | 0·1 | 16 | | 6·0 | Id.; diffuse cirri. ☽ |
| 11 | 964 | 58·3 | 56·8 | 1·5 | 0·1 | 0·0 | 18 | — : 24 : — | 8·0 | Thick sheet of cirro-strati covering the sky. |
| 12 | 958 | 59·1 | 56·9 | 2·2 | 0·1 | 0·1 | 20 | — : 24 : — | 9·9 | Cirro-cumuli, cirro-strati. |
| 28 0 | 29·853 | ... | ... | ... | 0·7 | ... | 24 | | ..... | Sunday—a peal of thunder heard at 7h. |
| 13 | 29·708 | 52·9 | 50·3 | 2·6 | 1·6 | 0·4 | 24 | — : 24 : — | 3·0 | Cirro-cumulous scud; cirro-strati. |
| 14 | 703 | 52·3 | 49·6 | 2·7 | 0·6 | 0·3 | 24 | — : 26 : — | 9·0 | Id.; cirro-cumuli. |
| 15 | 704 | 51·8 | 49·0 | 2·8 | 0·4 | 0·2 | 26 | — : 27 : — | 7·5 | Id. |
| 16 | 699 | 50·0 | 48·4 | 1·6 | 0·2 | 0·0 | 20 | 29 : — : — | 8·0 | Scud; cirro-strati on horizon. |
| 17 | 690 | 50·1 | 48·7 | 1·4 | 0·1 | 0·0 | 20 | 30 : — : — | 4·0 | Id. |
| 18 | 693 | 49·9 | 48·6 | †1·3 | 0·0 | 0·0 | 20 | 30 : 30 : — | 3·0 | Id., cirro-cumulous scud, cirro-strati. |
| 19 | 698 | 52·0 | 50·0 | 2·0 | 0·1 | 0·1 | 22 | 30 : — : — | 2·0 | Id.; cirro-stratous scud; id. |
| 20 | 698 | 56·0 | 52·4 | 3·6 | 0·3 | 0·2 | 24 | — : 30 : — | 8·2 | Cir.-str. scud; cir.-str. on hor., with cir.-cum. edges. |
| 21 | 701 | 59·2 | 54·0 | ↓5·2 | 1·5 | 0·9 | 24 | — : 31 : — | 9·3 | Id.; cirri and cirro-strati; scud. ● |
| 22 | 706 | 60·0 | 54·7 | 5·3 | 1·0 | 0·6 | 28 | 30 : 31 : — | 9·0 | Scud; cir.-cum.-str.; cumuli and cumulo-strati. ● |
| 23 | 696 | 60·0 | 53·9 | 6·1 | 1·0 | 0·5 | 30 | 29 : 31 : — | 8·0 | Id.; id.; cumulo-strati to S. ● |
| 29 0 | 690 | 61·6 | 53·7 | 7·9 | 1·1 | 0·9 | 28 | 28 : — : — | 6·2 | Loose cumuli; cirro-stratous scud. ⊙ |
| 1 | 702 | 60·9 | 53·5 | 7·4 | 1·3 | 1·1 | 28 | 30 : — : — | 7·0 | Id.; cirro-strati, cirro-cumuli, cumuli. ⊖ |
| 2 | 681 | 62·3 | 54·2 | 8·1 | 1·7 | 1·3 | 28 | 29 : — : — | 7·0 | Id.; cirro-stratous scud. ⊙ |
| 3 | 697 | 62·4 | 54·2 | 8·2 | 1·7 | 0·9 | 29 | 29 : — : — | 7·5 | Id.: woolly cirro-strati; cirro-cumuli. ⊖ |
| 4 | 691 | 64·0 | 54·8 | 9·2 | 1·3 | 0·6 | 31 | 29 : — : — | 9·7 | Scud, loose cumuli; cirro-strati. |
| 5 | 692 | 63·4 | 55·6 | 7·8 | 1·2 | 0·3 | 31 | 30 : — : — | 7·0 | Loose cumuli; cirro-cumulo-strati. ● |
| 6 | 691 | 62·6 | 54·0 | 8·6 | 1·0 | 0·6 | 30 | 30 : — : — | 9·8 | Scud, loose cumuli; cirro-stratous scud. |
| 7 | 688 | 61·7 | 53·8 | 7·9 | 0·5 | 0·4 | 30 | 29 : — : — | 8·5 | Id. |
| 8 | 675 | 59·4 | 53·0 | †6·4 | 0·4 | 0·1 | 31 | | 2·0 | Id.; cirro-strati. ⊙ |
| 9 | 668 | 54·0 | 51·1 | ↓2·9 | 0·0 | 0·0 | 28 | | 2·0 | Id.; id. ☽ |
| 10 | 679 | 53·6 | 51·9 | 1·7 | 0·0 | 0·0 | | | 9·0 | Id. |
| 11 | 677 | 53·8 | 51·0 | 2·8 | 0·1 | 0·0 | | | 9·0 | Id. |
| 12 | 665 | 52·8 | 51·3 | 1·5 | 0·0 | 0·0 | 20 | 28 : — : — | 8·5 | Scud and loose cumuli; cirro-strati. ☽ |
| 13 | 29·645 | 48·2 | 47·8 | 0·4 | 0·0 | 0·0 | 16 | — : 28 : — | 2·0 | Cirro-cumulo-strati to SW.; cirro-strati to E. ☽ |
| 14 | 624 | 45·6 | 45·1 | 0·5 | 0·0 | 0·0 | 17 | — : 21 : — | 3·0 | Cirro-cumuli; curled cirri. ☽ |
| 15 | 598 | 46·8 | 46·3 | 0·5 | 0·0 | 0·0 | | — : 20 : — | 6·0 | Id.; cirri and cirro-strati. |
| 16 | 562 | 45·9 | 45·7 | 0·2 | 0·0 | 0·0 | | — : 22 : — | 9·5 | Cirro-stratous scud; cirro-cumuli; cirri; scud to E. |
| 17 | 543 | 47·0 | 46·6 | 0·4 | 0·0 | 0·0 | | 22 : 23 : — | 9·0 | Cirro-cumuli; cirro-stratous scud; cirro-strati. ⊖ |

The direction of the wind is indicated by the number of the point of the compass, reckoning N. = 0, E. = 8, S. = 16, W. = 24. The motions of the three strata of clouds, Sc. (scud), C.-s. (cirro-stratus), and Cir. (cirrus), are indicated in a similar manner.

| Gött. Mean Time. | | Barometer at 32°. | Thermometers. Dry. | Wet. | Diff. | Wind. Maximum force in 1h. | 10m. | From | Clouds, Sc. : C.-s. : Ci., moving from | Sky clouded. | Species of Clouds and Meteorological Remarks. |
|---|---|---|---|---|---|---|---|---|---|---|---|
| d. | h. | in. | ° | ° | ° | lbs. | lbs. | pt. | pt. pt. pt. | 0—10. | |
| 29 | 18 | 29·515 | 47·8 | 47·3 | ↑0·5 | 0·0 | 0·0 | 1 | 19 : 22 : — | 9·3 | Thin scud, loose cumuli ; cirro-strati, cirrous haze. |
| | 19 | 486 | 49·7 | 49·0 | ↓0·7 | 0·0 | 0·0 | 6 | | 10·0 | Patches of loose scud ; id. ; id. |
| | 20 | 461 | 51·0 | 50·0 | 1·0 | 0·0 | 0·0 | 4 | 19 : — : — | 10·0 | Scud ; cirro-strati, cirrous haze. [rain since 20h. |
| | 21 | 422 | 51·4 | 51·0 | 0·4 | 0·0 | 0·0 | 4 | 7 : 16 : — | 9·9 | Thin smoky scud; wavy cir.-str. scud; range of cum.-str.; |
| | 22 | 383 | 55·0 | 53·0 | 2·0 | 0·1 | 0·0 | 6 | 16 : — : — | 10·0 | Scud ; cirro-stratous scud. |
| | 23 | 333 | 58·0 | 54·3 | 3·7 | 0·2 | 0·5 | 13 | 15 : — : — | 10·0 | Id. ; id. ; rain[1] |
| 30 | 0 | 296 | 57·3 | 54·7 | 2·6 | 0·5 | 0·3 | 13 | 14 : — : — | 10·0 | Id. ; cirro-strati ; rain[1] |
| | 1 | 262 | 57·4 | 54·2 | 3·2 | 1·0 | 0·4 | 13 | 14 : — : — | 10·0 | Id. ; id. ; cirro-stratous scud. |
| | 2 | 229 | 56·3 | 53·7 | 2·6 | 0·7 | 0·2 | 13 | 14 : — : — | 10·0 | Id. ; id. ; id. |
| | 3 | 200 | 54·9 | 53·8 | 1·1 | 0·9 | 0·2 | 13 | 14 : — : — | 10·0 | Id. ; id. ; rain[1-2] |
| | 4 | 172 | 54·0 | 53·5 | 0·5 | 0·3 | 0·2 | 13 | 12 : 13 : — | 10·0 | Id. ; id. ; rain[2] |
| | 5 | 145 | 53·4 | 52·9 | 0·5 | 0·2 | 0·1 | 6 | 13 : 14 : — | 10·0 | Id. ; cirro-stratous scud ; cirro-strati ; rain[0·2] |
| | 6 | 121 | 55·0 | 53·7 | 1·3 | 0·1 | 0·1 | 2 | 12 : — : — | 10·0 | Id. |
| | 7 | 109 | 55·7 | 54·3 | 1·4 | 0·1 | 0·1 | 1 | 12 : — : — | 10·0 | Id. ; cirro-strati and cumuli to S. |
| | 8 | 106 | 55·0 | 54·0 | 1·0 | 0·1 | 0·0 | 4 | 10 : — : — | 10·0 | Id. ; cirro-strati. |
| | 9 | 105 | 53·7 | 53·0 | 0·7 | 0·2 | 0·1 | 4 | 4 : 8 : — | 10·0 | Smoky scud ; cir.-str. scud ; cirro-strati, cirrous haze. |
| | 10 | 112 | 53·7 | 53·0 | 0·7 | 0·0 | 0·0 | 6 | | 10·0 | Id. ; id. ; id. |
| | 11 | 126 | 54·0 | 53·6 | 0·4 | 0·2 | 0·1 | 4 | | 10·0 | Scud. |
| | 12 | 136 | 54·0 | 53·7 | 0·3 | 0·3 | 0·3 | 4 | | 10·0 | Id. |
| | 13 | 29·150 | 53·6 | 53·4 | 0·2 | 0·4 | 0·3 | 5 | | 10·0 | Scud ; rain[0·5] |
| | 14 | 169 | 53·4 | 53·0 | 0·4 | 0·5 | 0·3 | 4 | | 10·0 | Id. ; rain[0·7] |
| | 15 | 187 | 53·2 | 52·6 | 0·6 | 0·7 | 0·7 | 2 | | 10·0 | Id. ; id. |
| | 16 | 207 | 52·9 | 52·3 | 0·6 | 0·4 | 0·2 | 2 | 3 : — : — | 10·0 | Id. ; id. |
| | 17 | 226 | 52·0 | 51·4 | 0·6 | 0·4 | 0·3 | 3 | 3 : — : — | 10·0 | Thin scud ; cirro-stratous scud ; cirro-strati ; rain[0·7] |
| | 18 | 244 | 52·0 | 51·2 | 0·8 | 0·4 | 0·4 | 3 | 3 : — : — | 10·0 | Id. ; id. ; rain[1·5] |
| | 19 | 262 | 52·4 | 51·8 | 0·6 | 0·3 | 0·0 | 4 | 3 : — : — | 10·0 | Id. ; id. ; rain[1] |
| | 20 | 281 | 53·9 | 52·9 | 1·0 | 0·1 | 0·0 | 2 | 2 : — : — | 10·0 | Id. ; id. |
| | 21 | 292 | 55·6 | 53·7 | 1·9 | 0·2 | 0·1 | 2 | 0 : — : — | 10·0 | Scud ; dense cirro-strati. |
| | 22 | 302 | 57·7 | 54·0 | 3·7 | 0·2 | 0·0 | 0 | 31 : — : — | 10·0 | Id. ; id. |
| | 23 | 307 | 57·6 | 53·5 | 4·1 | 0·2 | 0·2 | 31 | 31 : — : — | 10·0 | Id. ; id. |
| 31 | 0 | 314 | 58·0 | 53·5 | 4·5 | 0·3 | 0·2 | 28 | 31 : — : — | 10·0 | Id. ; id. |
| | 1 | 312 | 61·2 | 55·7 | 5·5 | 0·2 | 0·1 | 30 | 27 : — : — | 10·0 | Id. ; id. |
| | 2 | 307 | 60·0 | 54·8 | 5·2 | 0·3 | 0·3 | 20 | 27 : — : — | 10·0 | Id. ; id. ; rain[0·2] |
| | 3 | 305 | 59·0 | 55·5 | 3·5 | 0·4 | 0·2 | 21 | 28 : — : — | 10·0 | Id. ; id. |
| | 4 | 307 | 58·0 | 55·3 | 2·7 | 0·2 | 0·1 | 21 | 27 : — : — | 10·0 | Id. ; id. ; rain[0·2] |
| | 5 | 302 | 55·6 | 55·2 | 0·4 | 0·2 | 0·1 | 20 | 29 : — : — | 10·0 | Id. ; id. ; rain[1·5] |
| | 6 | 304 | 56·8 | 56·4 | 0·4 | 0·0 | 0·1 | 12 | 27 : — : — | 10·0 | Id. ; cirro-strati ; cumulo-strati to NW. ; rain[2] ● |
| | 7 | 302 | 55·1 | 54·7 | 0·4 | 0·2 | 0·0 | 12 | 25 : — : — | 9·9 | Loose gray cumulo-strati ; woolly cirro-strati ; rain[0·5] |
| | 8 | 305 | 54·2 | 53·2 | 1·0 | 0·1 | 0·0 | 24 | 26 : 25 : — | 9·9 | Cir.-cum.-str., cirro-stratous scud ; cirro-strati ; rain[0·2] |
| | 9 | 304 | 53·8 | 52·7 | 1·1 | 0·0 | 0·0 | 18 | 26 : — : — | 10·0 | Clouds thicker than at 8h. |
| | 10 | 304 | 54·6 | 52·8 | 1·8 | 0·2 | 0·2 | 20 | | 10·0 | Scud. |
| | 11 | 303 | 54·0 | 51·6 | 2·4 | 0·2 | 0·2 | 22 | | 10·0 | Id. |
| | 12 | 299 | 52·9 | 50·7 | 2·2 | 0·6 | 0·2 | 21 | | 9·7 | Id. |
| | 13 | 29·288 | 52·7 | 50·4 | 2·3 | 0·5 | 0·2 | 20 | | 9·7 | Scud ; cirro-stratus. |
| | 14 | 275 | 52·0 | 50·0 | 2·0 | 0·6 | 0·3 | 22 | 26 : — : — | 9·7 | Id. ; id. |
| | 15 | 271 | 51·1 | 49·6 | 1·5 | 0·4 | 0·1 | 20 | | 7·5 | Id., loose cumuli, cirro-strati, cirri. ☽ |
| | 16 | 263 | 51·6 | 50·1 | 1·5 | 0·1 | 0·1 | 21 | 26 : — : — | 7·5 | Id. ; cirri, cirrous haze. ☽ |
| | 17 | 254 | 51·7 | 50·1 | 1·6 | 0·2 | 0·1 | 22 | 25 : — : — | 9·5 | Id. ; cirro-stratous scud ; cirro-strati ; cirri. |
| | 18 | 256 | 52·0 | 51·1 | 0·9 | 0·2 | 0·0 | 22 | | 9·9 | Cirro-stratous scud, cirro-strati ; rain[0·2] |
| | 19 | 261 | 54·9 | 53·3 | 1·6 | 0·1 | 0·0 | 22 | 26 : — : — | 10·0 | Scud, cirro-stratous scud ; sheet of cirro-strati ; rain[0·2] |
| | 20 | 267 | 55·6 | 53·9 | 1·7 | 0·2 | 0·3 | 22 | 29 : — : — | 10·0 | Id. ; thick sheet of cirro-strati ; rain[0·2] ● |
| | 21 | 267 | 57·2 | 54·2 | 3·0 | 0·3 | 0·2 | 22 | | 10·0 | Id. ; id. ; id. ● |
| | 22 | 270 | 58·0 | 54·6 | 3·4 | 0·3 | 0·2 | 23 | 28 : — : — | 10·0 | Loose scud ; mass of cirro-strati. |
| | 23 | 273 | 55·7 | 54·0 | 1·7 | 0·6 | 0·2 | 22 | 28 : — : — | 10·0 | Scud ; cirro-stratus. |
| 1 | 0 | 277 | 57·8 | 54·3 | 3·5 | 0·8 | 0·4 | 24 | 26 : 27 : — | 10·0 | Loose smoky scud ; cirro-stratous scud. |
| | 1 | 278 | 60·0 | 55·0 | 5·0 | 0·8 | 0·6 | 25 | 28 : — : — | 10·0 | Scud ; cirro-strati ; cirrous haze. |

The direction of the wind is indicated by the number of the point of the compass, reckoning N. = 0, E. = 8, S. = 16, W. = 24. The motions of the three strata of clouds, Sc. (scud), C.-s. (cirro-stratus), and Cir. (cirrus), are indicated in a similar manner.

| Gött. Mean Time. | | Barometer at 32°. | Thermometers. Dry. | Wet. | Diff. | Wind. Maximum force in 1h. | 10m. | From | Clouds, Sc. : C.-s. : Ci., moving from | Sky clouded. | Species of Clouds and Meteorological Remarks. |
|---|---|---|---|---|---|---|---|---|---|---|---|
| d. | h. | in. | ° | ° | ° | lbs. | lbs. | pt. | pt. pt. pt. | 0—10. | |
| 1 | 2 | 29·281 | 60·2 | 55·1 | 5·1 | 0·8 | 0·7 | 26 | 26 : — : — | 10·0 | Scud ; cum.-str. ; cir.-str., cir. haze ; drops of rain. ● |
| | 3 | 287 | 61·2 | 55·2 | 6·0 | 0·8 | 0·7 | 28 | 26 : — : — | 10·0 | Id. ; id. ; id., id. |
| | 4 | 299 | 60·9 | 55·2 | 5·7 | 0·8 | 0·9 | 24 | 26 : — : — | 10·0 | Id. ; id. |
| | 5 | 310 | 58·2 | 54·9 | 3·3 | 1·0 | 0·4 | 23 | 26 : — : — | 10·0 | Patches of scud ; thick mass of cirro-strati. |
| | 6 | 318 | 58·9 | 54·7 | 4·2 | 1·7 | 1·0 | 22 | 25 : — : — | 9·8 | Id. ; id. |
| | 7 | 333 | 57·0 | 53·0 | 4·0 | 1·5 | 1·2 | 21 | 26 : — : — | 9·8 | Scud ; cirro-stratus. |
| | 8 | 347 | 55·9 | 52·7 | †3·2 | 0·9 | 0·8 | 24 | 26 : — : — | 9·7 | Loose scud ; cirro-stratous scud ; cirro-strati. ⊙ |
| | 9 | 365 | 55·4 | 51·7 | ↓3·7 | 0·9 | 0·8 | 24 | 25 : 26 : — | 9·8 | Id. ; id. ; id. |
| | 10 | 387 | 54·7 | 51·8 | 2·9 | 0·7 | 0·4 | 24 | 25 : — : — | 9·9 | Id. ; id. ; id. |
| | 11 | 400 | 53·2 | 50·9 | 2·3 | 0·8 | 0·7 | 21 | | 9·9 | Id. ; id. ; id. |
| | 12 | 417 | 53·8 | 50·3 | 3·5 | 0·8 | 1·1 | 23 | | 9·9 | Scud and cirro-stratus. |
| | 13 | 29·426 | 53·3 | 50·0 | 3·3 | 0·9 | 1·1 | 23 | | 10·0 | Scud and cirro-stratus. |
| | 14 | 439 | 53·0 | 50·0 | 3·0 | 1·0 | 0·5 | 24 | | 9·9 | Id. |
| | 15 | 450 | 52·4 | 49·0 | 3·4 | 0·7 | 0·4 | 22 | | 9·9 | Id. |
| | 16 | 456 | 52·9 | 49·0 | 3·9 | 0·4 | 0·2 | 21 | 26 : — : — | 9·5 | Id. |
| | 17 | 462 | 51·5 | 48·5 | 3·0 | 0·5 | 0·4 | 20 | 26 : 24 : — | 9·0 | Id. |
| | 18 | 483 | 50·0 | 47·5 | †2·5 | 0·6 | 0·3 | 21 | — : 24 : — | 5·0 | Cirro-cumuli ; cirro-strati. ● |
| | 19 | 503 | 51·0 | 47·7 | 3·3 | 0·4 | 0·2 | 22 | | 0·5 | Id. ; id. ; cirri. ⊙ |
| | 20 | 508 | 53·8 | 49·6 | 4·2 | 0·2 | 0·2 | 26 | 23 : — : 12 | 0·7 | Loose scud ; cirri ; cirro-strati. ⊙ |
| | 21 | 518 | 55·0 | 50·0 | ↓5·0 | 0·7 | 0·5 | 26 | 24 : — : 10 | 4·0 | Id. ; woolly, linear, and diffuse cirri. ⊙ |
| | 22 | 524 | 58·9 | 53·5 | 5·4 | 0·4 | 0·5 | 24 | 25 : — : — | 7·0 | Id. ; id. ⊖ |
| | 23 | 526 | 60·0 | 52·9 | 7·1 | 0·9 | 0·2 | 24 | 24 : — : — | 9·5 | Scud ; loose cumuli, cirro-strati, cirri. |
| 2 | 0 | 530 | 62·2 | 55·0 | 7·2 | 0·5 | 0·1 | 24 | 24 : — : — | 10·0 | Thick scud and loose cumuli. |
| | 1 | 531 | 61·7 | 55·7 | 6·0 | 0·8 | 0·5 | 20 | 24 : — : — | 8·5 | Scud ; loose cumuli. ⊖ |
| | 2 | 529 | 63·7 | 55·0 | 8·7 | 0·9 | 0·6 | 24 | 24 : 22 : — | 7·0 | Id. ; cumuli ; cirro-strati. |
| | 3 | 533 | 55·7 | 54·9 | 0·8 | 0·8 | 0·4 | 22 | 22 : — : — | 9·0 | Id. ; id. ; id. ; rain$^{2-4}$ |
| | 4 | 530 | 60·7 | 57·3 | 3·4 | 0·4 | 0·2 | 24 | 22 : — : — | 9·0 | Id. ; id. ; id. ; showers. ⊖ |
| | 5 | 515 | 64·0 | 58·7 | 5·3 | 0·2 | 0·4 | 22 | 23 : — : — | 8·0 | Id. ; id. ; id. ⊖ |
| | 6 | 512 | 60·0 | 56·0 | †4·0 | 0·9 | 0·3 | 19 | 20 : — : — | 6·0 | Id. ; id. ; id. ⊖ |
| | 7 | 513 | 58·4 | 54·9 | 3·5 | 0·4 | 0·2 | 20 | — : 24 : — | 9·0 | Id. ; id. ; id. |
| | 8 | 518 | 56·0 | 53·3 | ↓2·7 | 0·2 | 0·1 | 22 | — : 24 : — | 7·0 | Cirro-cumuli ; cirro-strati. ● |
| | 9 | 520 | 53·3 | 51·3 | 2·0 | 0·1 | 0·0 | 24 | | 1·5 | Scud and cirro-strati. |
| | 10 | 515 | 50·8 | 49·3 | 1·5 | 0·1 | 0·0 | 24 | | 0·2 | Cirro-strati and cirrous haze on E. horizon. |
| | 11 | 509 | 46·7 | 46·3 | 0·4 | 0·0 | 0·0 | 20 | | 0·2 | Cirri on NE. horizon ; faint lunar corona. ☽ |
| | 12 | 507 | 46·6 | 46·2 | 0·4 | 0·0 | 0·0 | 20 | | 0·2 | Patches of cirri ; heavy dew. ☽ |
| | 13 | 29·498 | 45·3 | 44·9 | 0·4 | 0·0 | 0·0 | 18 | — : 16 : — | 5·0 | Woolly cirri and cirro-cumulo-strati. ☽ |
| | 14 | 479 | 42·7 | 42·6 | 0·1 | 0·0 | 0·0 | 18 | | 0·5 | Cirri on horizon ; auroral light ; very clear. ☽ |
| | 15 | 464 | 41·0 | 41·0 | 0·0 | 0·0 | 0·0 | 18 | | 0·5 | Cirri ; cirro-strati to NE. ☽ |
| | 16 | 447 | 40·2 | 39·9 | 0·3 | 0·0 | 0·0 | 15 | 16 : — : — | 3·0 | Fog at ¼ mile ; stratus ; lunar corona. ☽ |
| | 17 | 429 | 40·3 | 40·0 | 0·3 | 0·0 | 0·0 | 18 | | 5·0 | Fog at 120 yards. ☽ |
| | 18 | 419 | 41·5 | 41·1 | †0·4 | 0·0 | 0·0 | 20 | 22 : — : — | 1·5 | Fog clearing off ; cirro-strati to N. and S. ◐ |
| | 19 | 392 | 43·0 | 42·7 | 0·3 | 0·0 | 0·0 | | | 1·0 | Fog ; cirro-strati. ⊙ |
| | 20 | 376 | 48·0 | 47·5 | 0·5 | 0·0 | 0·0 | 8 | — : — : 20 | 1·2 | Fog at 1 mile ; woolly cirri. ⊙ |
| | 21 | 348 | 54·0 | 51·8 | ↓2·2 | 0·3 | 0·3 | 7 | 14 : — : — | 2·0 | Foggy scud. ⊙ |
| | 22 | 329 | 57·0 | 53·3 | 3·7 | 0·6 | 0·6 | 5 | 10 : — : — | 2·5 | Cumuli ; cirri and cirrous haze. |
| | 23 | 300 | 60·4 | 54·6 | 5·8 | 1·1 | 1·0 | 8 | 10 : 12 : — | 6·5 | Id. ; id. |
| 3 | 0 | 286 | 60·1 | 54·0 | 6·1 | 1·0 | 0·9 | 6 | 9 : — : — | 9·5 | Loose cumuli ; cirro-stratous scud. |
| | 1 | 269 | 61·5 | 55·7 | 5·8 | 1·1 | 0·9 | 6 | 8 : — : — | 9·9 | Id. ; cirro-strati ; cirrous haze. |
| | 2 | 255 | 60·2 | 54·0 | 6·2 | 1·3 | 0·9 | 6 | 8 : — : — | 9·5 | Id. ; id. ; id. |
| | 3 | 240 | 58·3 | 53·3 | 5·0 | 1·5 | 0·9 | 7 | 7 : — : — | 10·0 | Id. ; id. ; a few drops of rain. |
| | 4 | 225 | 55·2 | 53·4 | 1·8 | 1·3 | 0·6 | 4 | 6 : — : — | 10·0 | Scud ; id. ; rain$^{0·5}$ |
| | 5 | 218 | 55·0 | 52·7 | 2·3 | 1·6 | 0·5 | 4 | 6 : — : — | 10·0 | Id. ; id. ; id. [rain$^{0·5}$ ● |
| | 6 | 202 | 55·7 | 53·8 | 1·9 | 0·9 | 0·7 | 4 | 5 : — : — | 9·9 | Loose scud ; piles of cum. ; woolly cirri, cirro-strati ; |
| | 7 | 204 | 55·2 | 52·9 | 2·3 | 1·0 | 1·2 | 6 | 6 : — : — | 10·0 | Id. ; cirro-strati. |
| | 8 | 220 | 53·5 | 51·8 | 1·7 | 0·9 | 0·2 | 4 | 6 : — : — | 10·0 | Id. ; id. |
| | 9 | 224 | 53·0 | 51·2 | 1·8 | 0·4 | 0·2 | 3 | 4 : — : — | 9·8 | Scud ; cirro-strati ; woolly cirri ; drops of rain. |

The direction of the wind is indicated by the number of the point of the compass, reckoning N. = 0, E. = 8, S. = 16, W. = 24. The motions of the three strata of clouds, Sc. (scud), C.-s. (cirro-stratus), and Cir. (cirrus), are indicated in a similar manner.

| Gött. Mean Time. | Barometer at 32°. | Thermometers. Dry. | Wet. | Diff. | Wind. Maximum force in 1h. | 10m. | From | Clouds, Sc. : C.-s. : Ci., moving from | Sky clouded. | Species of Clouds and Meteorological Remarks. |
|---|---|---|---|---|---|---|---|---|---|---|
| d. h. | in. | ° | ° | ° | lbs. | lbs. | pt. | pt. pt. pt. | 0—10. | |
| 3 10 | 29·232 | 53·2 | 51·7 | 1·5 | 0·2 | 0·2 | 3 | 4 : — : — | 9·8 | Scud ; cirro-strati ; woolly cirri ; drops of rain. |
| 11 | 237 | 51·8 | 50·4 | 1·4 | 0·2 | 0·1 | 4 | | 4·0 | Id. ; id. |
| 12 | 246 | 50·6 | 49·7 | 0·9 | 0·2 | 0·0 | 4 | | 4·0 | Id. ; cirro-cumuli. ☽ |
| 23 | 29·365 | ... | ... | ... | 0·2 | 0·0 | | | ..... | |
| 4 13 | 29·507 | 52·0 | 50·7 | 1·3 | 0·6 | 0·0 | 24 | | 9·9 | Large cirro-cumuli. |
| 14 | 514 | 51·0 | 50·0 | 1·0 | 0·0 | 0·0 | 0 v. | — : 23 : — | 6·5 | Id. ; cirro-strati to S. ; sky to S. |
| 15 | 522 | 49·0 | 48·3 | 0·7 | 0·0 | 0·0 | 20 | — : 23 : — | 3·0 | Cirro-cumuli ; banks of cirro-strati to NE. ☽ |
| 16 | 517 | 48·0 | 47·7 | 0·3 | 0·0 | 0·0 | 24 | | 10·0 | Cirro-stratous scud. |
| 17 | 523 | 49·5 | 48·9 | 0·6 | 0·0 | 0·0 | 20 | — : 24 : — | 10·0 | Id. |
| 18 | 533 | 51·0 | 50·0 | 1·0 | 0·0 | 0·0 | 24 | — : 24 : — | 10·0 | Thin scud ; cirro-stratus. |
| 19 | 539 | 53·4 | 52·2 | 1·2 | 0·0 | 0·0 | | — : 24 : — | 10·0 | Cirro-stratous scud ; cirro-strati. |
| 20 | 556 | 56·1 | 54·0 | 2·1 | 0·0 | 0·0 | 20 | — : 24 : — | 10·0 | Id. ; id. |
| 21 | 566 | 59·2 | 56·0 | 3·2 | 0·1 | 0·1 | 20 | 24 : — : — | 9·9 | Loose scud ; cirro-stratous scud ; cirro-strati ; cumuli. |
| 22 | 561 | 61·3 | 57·3 | 4·0 | 0·1 | 0·1 | 20 | 24 : — : — | 9·9 | Id. ; id. ; id. ; id. |
| 23 | 576 | 64·3 | 58·1 | 6·2 | 0·2 | 0·0 | 14 | 23 : — : — | 9·9 | Id. ; id. ; id. ; id. |
| 5 0 | 579 | 64·7 | 58·3 | 6·4 | 0·2 | 0·1 | 18 | 23 : — : — | 10·0 | Id. ; id. ; id. ; id. |
| 1 | 577 | 67·5 | 59·6 | 7·9 | 0·0 | 0·0 | | | 9·8 | Id. ; id. ; id. ; id. |
| 2 | 568 | 66·7 | 59·6 | 7·1 | 0·0 | 0·0 | 4 | 21 : — : — | 9·8 | Scud ; cumuli ; cirro-strati. ⊖ |
| 3 | 560 | 67·8 | 59·8 | 8·0 | 0·0 | 0·0 | 28 | | 8·0 | Id. ; id. ; id. ; patches of cirri. |
| 4 | 553 | 66·9 | 59·2 | 7·7 | 0·1 | 0·0 | 8 | 20 : 16 : — | 8·0 | Id. ; id. ; id. ; id. ⊖ |
| 5 | 548 | 67·0 | 59·3 | 7·7 | 0·1 | 0·1 | 8 | — : 16 : — | 9·0 | Cirro-cumulous scud ; cumulo-strati ; nimbi ; cirri. ⊖ |
| 6 | 538 | 61·4 | 57·0 | 3·8 | 0·4 | 0·3 | 14 | — : 17 : — | 9·5 | Id. ; id. ; id. ; id. ⊖ |
| 7 | 534 | 61·8 | 57·4 | 4·4 | 0·4 | 0·1 | 14 | — : 17 : — | 8·5 | Cirro-cumuli ; linear and woolly cirri ; cumuli. |
| 8 | 528 | 58·6 | 55·9 | 2·7 | 0·4 | 0·2 | 14 | 14 : 14 : 22 | 6·0 | Scud ; cir.-cum.-str. ; woolly and linear cirri. ⊙ |
| 9 | 527 | 55·6 | 52·3 | 3·3 | 0·1 | 0·0 | 28 | — : 16 : — | 9·0 | Cir.-cum. scud ; cir.-cum.-str. ; cirro-strati ; cirri. |
| 10 | 517 | 54·3 | 52·3 | 2·0 | 0.0 | 0·0 | 8 | | 8·5 | Id. ; id. ; id. ; id. |
| 11 | 504 | 53·7 | 53·2 | 0·5 | 0·1 | 0·0 | 8 | | 6·5 | Scud and cirri. |
| 12 | 484 | 53·7 | 51·9 | 1·8 | 0·1 | 0·2 | 4 | | 10·0 | Thick scud ; cirri. |
| 13 | 29·464 | 53·7 | 52·7 | 1·0 | 0·3 | 0·3 | 4 | 16 : — : — | 10·0 | Thick scud ; cirri ; rain$^{0·2}$ ; showers. |
| 14 | 440 | 54·2 | 53·3 | 0·9 | 0·4 | 0·3 | 4 | | 10·0 | Id. ; id. |
| 15 | 406 | 54·1 | 53·3 | 0·8 | 0·3 | 0·3 | 3 | | 10·0 | Id. ; rain$^{0·2}$ |
| 16 | 374 | 53·6 | 52·7 | 0·9 | 0·4 | 0·3 | 5 | — : 16 : — | 10·0 | Cirro-strati ; patches of scud. |
| 17 | 348 | 53·9 | 53·0 | 0·9 | 0·5 | 0·3 | 7 | 8 : — : — | 10·0 | Loose scud ; nearly uniform cirro-strati ; drops of rain. |
| 18 | 319 | 54·9 | 53·6 | 1·3 | 0·4 | 0·4 | 6 | 8 : — : — | 10·0 | Id. ; id. ; rain$^{0·2}$ |
| 19 | 280 | 55·0 | 52·0 | 3·0 | 1·5 | 1·4 | 6 | 9 : — : — | 10·0 | As before. |
| 20 | 250 | 53·5 | 52·2 | 1·3 | 2·7 | 1·7 | 6 | 6 : — : — | 10·0 | Id. ; rain$^{0·2}$ |
| 21 | 198 | 54·0 | 53·2 | 0·8 | 2·4 | 2·4 | 6 | 5 : — : — | 10·0 | Id. ; rain$^{0·5}$ |
| 22 | 149 | 54·5 | 53·5 | 1·0 | 2·1 | 2·1 | 5 | 3 : — : — | 10·0 | Id. ; id. |
| 23 | 106 | 56·5 | 54·9 | 1·6 | 2·1 | 0·7 | 5 | 10 : — : — | 10·0 | Id. |
| 6 0 | 072 | 61·2 | 59·2 | 2·0 | 0·9 | 0·6 | 8 | 11 : 13 : — | 9·8 | Scud ; scud and loose cumuli ; woolly cirri. ⊖ |
| 1 | 031 | 66·0 | 59·2 | 6·8 | 1·3 | 2·0 | 16 | 14 : 15 : — | 9·5 | Id. ; id. ; shower$^{4}$ since 0h. ⦶ |
| 2 | 021 | 63·4 | 57·5 | 5·9 | 1·6 | 1·5 | 14 | 15 : — : — | 9·9 | Id. ; loose cumuli ; sky to S. |
| 3 | 006 | 63·0 | 56·0 | 7·0 | 2·7 | 2·6 | 14 | 16 : 12 : — | 7·0 | Id. ; id. ⊖ |
| 4 | 29·005 | 59·0 | 53·7 | 5·3 | 3·5 | 1·3 | 14 | 16 : — : — | 9·9 | Id. ; id. |
| 5 | 28·982 | 58·3 | 53·0 | 5·3 | 2·6 | 1·8 | 16 | 16 : — : — | 9·9 | Id. ; id. ; a break to E. |
| 6 | 930 | 55·0 | 51·6 | 3·4 | 3·5 | 1·6 | 14 | 15 : — : — | 9·5 | Loose scud, cir.-str. scud ; uniform cir.-str. ; rain$^{0·5}$ |
| 7 | 868 | 55·8 | 51·8 | 4·0 | 3·8 | 2·8 | 14 | 15 : — : — | 10·0 | Id., id. ; drops of rain. |
| 8 | 838 | 54·7 | 51·8 | 2·9 | 3·3 | 2·4 | 13 | 16 : — : — | 9·9 | Id. ; blue to WSW. |
| 9 | 811 | 55·2 | 52·8 | 2·4 | 2·4 | 2·8 | 17 | 17 : — : — | 10·0 | Scud. |
| 10 | 824 | 54·1 | 51·4 | 2·7 | 3·1 | 2·6 | 18 | 19 : — : — | 10·0 | Id. |
| 11 | 852 | 52·4 | 49·6 | 2·8 | 3·3 | 1·7 | 19 | | 3·0 | Id. |
| 12 | 864 | 52·3 | 50·6 | 1·7 | 2·0 | 0·9 | 19 | | 9·0 | Loose scud ; rain$^{0·2}$ |
| 13 | 28·873 | 53·7 | 51·9 | 1·8 | 1·6 | 0·5 | 18 | 20 : — : — | 10·0 | Loose scud. |
| 14 | 880 | 53·3 | 51·1 | 2·2 | 0·7 | 0·3 | 18 | | 10·0 | Id. |
| 15 | 880 | 52·0 | 51·1 | 0·9 | 0·7 | 0·2 | 20 | | 10·0 | Id. ; rain$^{0·2}$ since 14h. |

The direction of the wind is indicated by the number of the point of the compass, reckoning N. = 0, E. = 8, S. = 16, W. = 24. The motions of the three strata of clouds, Sc. (scud), C.-s. (cirro-stratus), and Cir. (cirrus), are indicated in a similar manner.

| Gött. Mean Time. | Barometer at 32°. | Thermometers. Dry. | Wet. | Diff. | Wind. Maximum force in 1h. | 10m. | From | Clouds, Sc. : C.-s. : Ci., moving from | Sky clouded. | Species of Clouds and Meteorological Remarks. |
|---|---|---|---|---|---|---|---|---|---|---|
| d. h. | in. | ° | ° | ° | lbs. | lbs. | pt. | pt. pt. pt. | 0—10. | |
| 6 16 | 29·880 | 53·2 | 52·8 | 0·4 | 1·1 | 1·3 | 19 | | 10·0 | Loose scud ; rain[1-2] |
| 17 | 880 | 53·0 | 52·7 | 0·3 | 1·3 | 1·3 | 20 | 22 : — : — | 10·0 | Scud ; cirro-strati. |
| 18 | 889 | 53·2 | 52·9 | 0·3 | 1·3 | 0·8 | 19 | 22 : — : — | 9·9 | Id. ; id. ; rain[2] |
| 19 | 906 | 54·3 | 53·3 | 1·0 | 1·3 | 0·5 | 19 | 21 : 23 : — | 10·0 | Smoky scud ; cirro-stratous scud ; cirro-strati. |
| 20 | 914 | 55·0 | 53·8 | 1·2 | 1·2 | 1·2 | 18 | 21 : 23 : — | 10·0 | Id. ; id. ; id. ; rain[2] |
| 21 | 928 | 54·0 | 53·3 | 0·7 | 1·4 | 0·6 | 20 | 21 : — : — | 10·0 | Scud ; rain[3] |
| 22 | 950 | 57·4 | 55·4 | 2·0 | 1·2 | 0·6 | 20 | 21 : 20 : — | 10·0 | Thin scud ; cirro-stratous scud. |
| 23 | 28·970 | 58·1 | 55·1 | 3·0 | 1·9 | 1·7 | 20 | 20 : 20 : — | 9·2 | Id. ; cirro-cumuli, cumuli, cirro-strati. |
| 7 0 | 29·011 | 57·3 | 53·7 | 3·6 | 2·4 | 2·3 | 21 | 22 : 23 : — | 10·0 | Scud ; cirro-strati. ● |
| 1 | 030 | 58·8 | 54·8 | 4·0 | 3·8 | 1·8 | 19 | 22 : — : — | 10·0 | Id. ; id. ● |
| 2 | 034 | 58·1 | 54·3 | 3·8 | 3·9 | 3·2 | 19 | 21 : 22 : — | 9·2 | Loose scud ; cir.-str. ; woolly cirri ; cirrous haze. ● |
| 3 | 057 | 59·9 | 55·7 | 4·2 | 4·4 | 2·6 | 19 | 21 : 22 : — | 9·5 | Id. ; id. ; id. ; id. ⊕ |
| 4 | 069 | 59·1 | 55·4 | 3·7 | 3·6 | 2·4 | 20 | 21 : 22 : — | 9·0 | Id. ; id. ; id. ; id. ● |
| 5 | 065 | 58·3 | 53·8 | 4·5 | 3·3 | 3·2 | 19 | 21 : 22 : — | 9·5 | Id. ; id. ; id. ; id. |
| 6 | 068 | 55·9 | 51·9 | 4·0 | 3·6 | 2·3 | 20 | 21 : 22 : — | 9·2 | Scud ; cirro-strati ; cirro-cumuli ; cirri. |
| 7 | 071 | 55·4 | 52·0 | 3·4 | 3·1 | 2·8 | 18 | 21 : 22 : — | 7·0 | Id. ; id. ; id. ; id. |
| 8 | 080 | 53·8 | 50·9 | 2·9 | 2·8 | 1·5 | 19 | 21 : — : — | 9·8 | Id. ; id. ; id. ; id. |
| 9 | 086 | 52·1 | 49·8 | 2·3 | 1·9 | 1·7 | 20 | 21 : 22 : — | 9·8 | Id. ; id. |
| 10 | 097 | 52·6 | 49·9 | 2·7 | 1·4 | 0·7 | 20 | | 10·0 | Id. ; id. |
| 11 | 095 | 52·5 | 50·0 | 2·5 | 1·1 | 1·5 | 19 | | 10·0 | Id. ; id. |
| 12 | 085 | 52·3 | 50·0 | 2·3 | 1·2 | 0·8 | 20 | | 10·0 | Id. |
| 13 | 29·071 | 52·2 | 50·0 | 2·2 | 1·2 | 0·9 | 20 | | 7·0 | Scud ; sky in zenith. ☽ |
| 14 | 066 | 51·2 | 49·3 | 1·9 | 0·8 | 0·3 | 19 | | 8·0 | Id. |
| 15 | 049 | 51·5 | 49·7 | 1·8 | 0·7 | 0·4 | 18 | 20 : — : — | 9·9 | Id. ☽ |
| 16 | 031 | 52·0 | 50·0 | 2·0 | 0·6 | 0·4 | 20 | 22 : 22 : — | 9·5 | Smoky scud ; cirro-cumuli ; cirro-strati. ☽ |
| 17 | 026 | 52·2 | 50·5 | 1·7 | 0·8 | 0·4 | 20 | 22 : — : — | 10·0 | Scud ; cirro-cumuli. |
| 18 | 021 | 52·7 | 51·3 | 1·4 | 0·7 | 0·4 | 18 | 24 : — : — | 9·9 | Id. ; id. |
| 19 | 020 | 53·8 | 51·9 | 1·9 | 0·8 | 0·7 | 20 | 24 : — : — | 9·9 | Id. ; cirro-strati. |
| 20 | 019 | 57·0 | 53·8 | ↑3·2 | 1·2 | 0·4 | 19 | 24 : — : 22 | 9·8 | Id. ; woolly cirri ; cirrous haze ; cirro-strati. ⊖ |
| 21 | 035 | 54·0 | 53·0 | ↓1·0 | 1·1 | 0·3 | 21 | 0 : 22 : — | 9·9 | Id. ; uniform sheet of cirro-strati ; rain[0·7] |
| 22 | 048 | 58·1 | 55·6 | 2·5 | 0·6 | 0·4 | 21 | 24 : — : — | 9·9 | Id. ; woolly cirri ; cirrous haze ; faint solar halo. ⊖ |
| 23 | 066 | 61·6 | 55·4 | 6·2 | 1·5 | 1·3 | 24 | 24 : 24 : — | 9·7 | Id. ; id. ; id. ; cirro-cumuli. ⊖ |
| 8 0 | 077 | 59·6 | 53·9 | 5·7 | 2·6 | 1·0 | 22 | 24 : — : — | 9·6 | Id. ; cumuli ; cirri. |
| 1 | 091 | 61·0 | 53·6 | 7·4 | 2·7 | 2·2 | 24 | 25 : — : — | 8·0 | Id. ; id. ; cirro-strati ; cirro-cumuli. ⊖ |
| 2 | 106 | 59·9 | 54·0 | 5·9 | 3·0 | 2·5 | 20 | 24 : — : — | 9·9 | Id. ; cirro-strati and cirrous haze. |
| 3 | 118 | 59·2 | 53·3 | 5·9 | 2·6 | 2·1 | 25 | 24 : 24 : — | 9·8 | Id. ; cumuli ; cirro-strati ; cirrous haze. |
| 4 | 130 | 59·1 | 53·6 | 5·5 | 2·6 | 1·7 | 23 | 25 : — : — | 9·9 | Id. ; cirrous haze ; cirro-strati ; solar halo. |
| 5 | 140 | 59·2 | 53·7 | 5·5 | 2·2 | 1·2 | 24 | 25 : — : — | 9·8 | Id. ; id. ; id. |
| 6 | 146 | 58·3 | 53·0 | 5·3 | 1·8 | 1·1 | 23 | 25 : — : — | 9·8 | Id. ; id. ; id. |
| 7 | 159 | 58·1 | 52·7 | 5·4 | 1·9 | 0·9 | 23 | 25 : — : — | 9·9 | Id. ; id. ; id. ; rain[0·2] |
| 8 | 168 | 56·1 | 52·1 | 4·0 | 1·5 | 1·7 | 22 | 26 : 27 : — | 9·0 | Id. ; cirro-cumuli ; id. ; woolly cirri. |
| 9 | 185 | 55·0 | 51·6 | 3·4 | 1·6 | 1·1 | 22 | 26 : — : — | 7·5 | Id. ; id. |
| 10 | 193 | 54·3 | 50·9 | 3·4 | 1·7 | 1·6 | 23 | | 5·0 | Id. ; cirro-strati. |
| 11 | 210 | 54·4 | 51·1 | 3·3 | 1·4 | 0·8 | 23 | | 5·0 | Id. ; id. |
| 12 | 229 | 54·1 | 50·9 | 3·2 | 1·4 | 1·8 | 25 | | 5·0 | Cirro-stratous scud ; cirri. |
| 13 | 29·243 | 53·3 | 50·5 | 2·8 | 1·7 | 1·0 | 24 | | 4·0 | Cirro-stratous scud ; cirri. |
| 14 | 243 | 53·3 | 50·3 | 3·0 | 1·4 | 1·6 | 25 | | 7·0 | Id. ; id. |
| 15 | 251 | 53·0 | 50·0 | 3·0 | 2·2 | 1·1 | 25 | — : 26 : — | 7·0 | Cirro-cumulo-strati ; cirro-strati. |
| 16 | 264 | 52·3 | 49·4 | 2·9 | 2·6 | 1·9 | 25 | — : 26 : — | 3·5 | Id. ; id. ☽ |
| 17 | 277 | 51·1 | 48·7 | 2·4 | 1·1 | 0·8 | 25 | — : 26 : — | 5·5 | Id. ; grey nimbi to NW. ☽ |
| 18 | 291 | 52·1 | 49·1 | 3·0 | 1·0 | 0·8 | 24 v. | 26 : 28 : 28 | 7·5 | Scud ; woolly cirri ; cirro-cumulo-strati. |
| 19 | 317 | 53·4 | 49·8 | 3·6 | 1·2 | 0·8 | 24 | — : 27 : — | 8·0 | Woolly cirro-strati ; scud on horizon. |
| 20 | 322 | 54·7 | 51·0 | 3·7 | 0·7 | 0·4 | 24 | — : 27 : — | 9·0 | Id. ; id. |
| 21 | 344 | 55·9 | 51·3 | 4·6 | 0·7 | 0·5 | 21 | 26 : 26 : — | 7·0 | Loose scud ; cirro-strati, cirro-cumuli. |
| 22 | 353 | 57·8 | 52·3 | 5·5 | 0·7 | 0·6 | 25 | 26 : — : — | 9·0 | Id. ; id. ; id. ● |
| 23 | 366 | 59·9 | 53·3 | 6·6 | 1·1 | 0·6 | 24 | 25 : — : — | 9·5 | Id. ; id. ; id. ● |

The direction of the wind is indicated by the number of the point of the compass, reckoning N. = 0, E. = 8, S. = 16, W. = 24. The motions of the three strata of clouds, Sc. (scud), C.-s. (cirro-stratus), and Cir. (cirrus), are indicated in a similar manner.

| Gött. Mean Time. | | Barometer at 32°. | Thermometers. Dry. | Wet. | Diff. | Wind. Maximum force in 1h. | 10m. | From | Clouds, Sc. : C.-s. : Ci., moving from | Sky clouded. | Species of Clouds and Meteorological Remarks. |
|---|---|---|---|---|---|---|---|---|---|---|---|
| d. | h. | in. | ° | ° | ° | lbs. | lbs. | pt. | pt. pt. pt. | 0—10. | |
| 9 | 0 | 29·375 | 59·5 | 52·1 | 7·4 | 1·3 | 1·1 | 22 | 24 : — : — | 9·5 | Scud and loose cumuli ; cirro-strati ; cirri. |
| | 1 | 371 | 60·8 | 52·5 | 8·3 | 1·5 | 0·7 | 24 | 28 : 24 : — | 8·5 | Loose scud ; loose cumuli. ◐ |
| | 2 | 374 | 60·3 | 53·0 | 7·3 | 2·0 | 1·2 | 22 | 25 : — : — | 9·5 | Scud and loose cumuli ; cirro-strati ; cirri. |
| | 3 | 385 | 59·0 | 52·0 | 7·0 | 1·3 | 0·7 | 24 | 26 : — : — | 9·5 | Id. ; id. ; id. |
| | 4 | 393 | 57·5 | 52·2 | 5·3 | 1·7 | 0·8 | 23 | 26 : — : — | 10·0 | Id. |
| | 5 | 399 | 55·8 | 50·6 | 5·2 | 0·5 | 0·3 | 23 | 24 : — : — | 10·0 | Id. |
| | 6 | 395 | 56·4 | 51·2 | 5·2 | 0·6 | 0·3 | 23 | 26 : — : — | 9·5 | Scud ; cirro-stratous scud ; id. ; id. |
| | 7 | 395 | 55·1 | 49·7 | 5·4 | 1·1 | 0·3 | 24 | 26 : — : — | 8·0 | Id. ; id. ; id. ; id. |
| | 8 | 404 | 53·5 | 48·3 | 5·2 | 0·5 | 0·4 | 24 | — : 24 : — | 9·0 | Cirro-cumulo-strati ; woolly cirro-strati and cirri. |
| | 9 | 410 | 51·9 | 48·0 | 3·9 | 0·3 | 0·3 | 23 | — : 25 : — | 9·0 | Id. ; id. |
| | 10 | 411 | 50·4 | 47·6 | 2·8 | 0·4 | 0·3 | 22 | | 9·0 | Id. |
| | 11 | 404 | 49·5 | 46·9 | 2·6 | 0·2 | 0·1 | 22 | | 3·0 | Scud. |
| | 12 | 408 | 47·5 | 45·8 | 1·7 | 0·1 | 0·1 | 22 | | 3·0 | Id. ; cirro-strati. |
| | 13 | 29·405 | 47·2 | 45·6 | 1·6 | 0·2 | 0·1 | 21 | | 3·0 | Scud ; cirro-strati. |
| | 14 | 397 | 45·3 | 44·3 | 1·0 | 0·2 | 0·2 | 20 | | 1·0 | Thin clouds. |
| | 15 | 396 | 44·2 | 43·1 | 1·1 | 0·2 | 0·1 | | | 1·0 | Id. ; cirro-strati on horizon. ☽ |
| | 16 | 384 | 42·0 | 41·3 | 0·7 | 0·1 | 0·0 | 24 | | 0·3 | Cirro-strati on horizon ; very clear. ☽ |
| | 17 | 381 | 41·4 | 40·6 | 0·8 | 0·2 | 0·1 | 20 | — : 0 : — | 2·2 | Loose cirro-cumulous scud ; cirro-strati, cirri. ☽ |
| | 18 | 388 | 43·2 | 41·5 | †1·7 | 0·2 | 0·2 | 20 | 0 : 28 : — | 2·0 | Scud ; woolly and mottled cirri. ◐ |
| | 19 | 392 | 45·7 | 43·6 | 2·1 | 0·1 | 0·0 | 20 | — : 31 : — | 8·0 | Cirro-stratous scud ; cirro-strati ; cirri ; cirrous haze. |
| | 20 | 396 | 49·7 | 46·0 | ↓3·7 | 0·1 | 0·0 | 22 | — : 30 : — | 9·5 | Id. |
| | 21 | 395 | 54·3 | 50·0 | 4·3 | 0·1 | 0·0 | 28 | 28 : — : — | 9·3 | Scud and loose cum. ; cir.-str., woolly and lin. cirri. ● |
| | 22 | 400 | 55·5 | 49·1 | 6·4 | 0·4 | 0·3 | 0 | 31 : — : — | 9·8 | As before. |
| | 23 | 399 | 58·4 | 51·7 | 6·7 | 0·2 | 0·1 | 31 | 31 : — : — | 9·8 | Scud and loose cumuli ; cumulo-strati to E. |
| 10 | 0 | 408 | 58·9 | 51·9 | 7·0 | 0·2 | 0·1 | 28 | 31 : — : — | 9·5 | Ranges of flat-based cumuli ; cirro-cumulo-strati. ● |
| | 1 | 413 | 61·0 | 53·5 | 7·5 | 0·3 | 0·1 | 28 | 31 : — : — | 9·5 | As before. |
| | 2 | 413 | 60·2 | 53·0 | 7·2 | 0·1 | 0·1 | 28 | 30 : 0 : — | 9·8 | Loose scud ; thicker scud ; cumuli ; cirro-strati. |
| | 3 | 417 | 61·1 | 53·7 | 7·4 | 0·2 | 0·1 | 28 | 30 : — : — | 9·2 | Scud ; cumulo-strati ; nimbi, cirro-cumulo-strati. |
| | 4 | 416 | 60·3 | 53·1 | 7·2 | 0·2 | 0·1 | 30 | — : 30 : — | 9·0 | Cirro-cumulo-strati ; cumuli, nimbi, scud ; rain to E. |
| | 5 | 417 | 60·5 | 53·0 | 7·5 | 0·2 | 0·1 | 30 | — : 30 : — | 6·0 | As before. ⊙ |
| | 6 | 417 | 60·0 | 53·2 | †6·8 | 0·1 | 0·0 | 9 | — : 30 : — | 4·5 | Cirro-cumulo-strati ; cumulo-strati ; nimbi ; scud. ⊙ |
| | 7 | 430 | 57·4 | 51·7 | ↓5·7 | 0·1 | 0·0 | 10 | — : 30 : — | 4·0 | Cirro-cumulous scud ; cumuli, cumulo-strati ; cir.-str. |
| | 8 | 446 | 56·4 | 52·8 | 3·6 | 0·1 | 0·0 | 28 | 29 : — : — | 8·0 | Scud ; cumulo-strati ; cirro-strati. |
| | 9 | 460 | 53·3 | 51·4 | 1·9 | 0·0 | 0·0 | 28 | 30 : — : — | 4·0 | Id. ; cirro-strati. |
| | 10 | 474 | 49·9 | 48·7 | 1·2 | 0·0 | 0·0 | | | 8·0 | Id. ; id. |
| | 11 | 494 | 50·0 | 48·8 | 1·2 | 0·0 | 0·0 | | | 9·8 | Id. ; id. |
| | 12 | 488 | 50·2 | 48·8 | 1·4 | 0·0 | 0·0 | | | 9·5 | Id. ; id. |
| | 23 | 29·475 | ... | ... | ... | 0·5 | ... | 18 | | ..... | Sunday—A.M. Cumuli, cum.-str., cir.-str., occasional sunshine. P.M. Overcast ; light rain began at 6½h. |
| 11 | 13 | 29·347 | 53·2 | 52·4 | 0·8 | 1·0 | 0·0 | | | 10·0 | Patches of scud ; cir.-str. ; very dark ; drops of rain. |
| | 14 | 333 | 52·8 | 52·2 | 0·6 | 0·1 | 0·1 | 29 | | 10·0 | Scud ; cirro-strati ; rain0·5 |
| | 15 | 320 | 52·7 | 52·0 | 0·7 | 0·1 | 0·1 | 29 | | 10·0 | Id. ; id. ; rain1·5 |
| | 16 | 309 | 52·5 | 51·9 | 0·6 | 0·1 | 0·2 | 4 | 9 : — : — | 10·0 | Id. ; id. ; rain0·7 |
| | 17 | 297 | 52·6 | 52·0 | 0·6 | 0·2 | 0·2 | 4 | 4 : 9 : — | 10·0 | Thin smoky scud ; cir.-str. scud ; uniform cirro-strati. |
| | 18 | 301 | 53·0 | 52·4 | 0·6 | 0·3 | 0·2 | 6 | 5 : — : — | 10·0 | Smoky scud or stratus ; cirrous clouds. |
| | 19 | 315 | 54·5 | 53·8 | 0·7 | 0·3 | 0·2 | 3 | 7 : 7 : — | 10·0 | Thin smoky scud ; cirro-cumulo-strati ; hazy. |
| | 20 | 317 | 56·1 | 54·9 | 1·2 | 0·4 | 0·3 | 3 | 7 : 7 : — | 9·9 | Id. ; id. ; id. |
| | 21 | 328 | 58·1 | 56·0 | 2·1 | 0·4 | 0·3 | 6 | 6 : — : — | 9·9 | Scud and loose cumuli ; cirro-cumulo-strati ; cir.-str. |
| | 22 | 341 | 60·0 | 55·2 | 4·8 | 0·5 | 0·4 | 4 | 6 : — : — | 9·9 | Id. ; id. ; id. |
| | 23 | 341 | 59·8 | 55·2 | 4·6 | 0·6 | 0·5 | 3 | 7 : 6 : — | 9·9 | Thin scud ; loose cumuli ; woolly and linear cirri. |
| 12 | 0 | 353 | 63·0 | 57·0 | 6·0 | 0·9 | 0·7 | 5 | 5 : 5 : — | 9·5 | Id. ; scud and loose cumuli ; woolly cirri. ⊖ |
| | 1 | 362 | 62·5 | 56·3 | 6·2 | 0·8 | 0·3 | 4 | 5 : 5 : — | 9·2 | Id. ; id. ; id. ● |
| | 2 | 371 | 61·7 | 55·6 | 6·1 | 0·7 | 0·5 | 5 | 4 : — : — | 8·0 | Scud and loose cumuli ; woolly cirri to S. ⊙ |
| | 3 | 378 | 61·3 | 54·6 | 6·7 | 0·7 | 0·4 | 4 | 4 : — : — | 7·0 | Id. ; id. ◐ |
| | 4 | 383 | 61·3 | 55·0 | 6·3 | 0·6 | 0·4 | 6 | 4 : — : — | 6·0 | Loose cumuli ; piles of cumuli on horizon. ⊙ |
| | 5 | 386 | 60·7 | 55·2 | 5·5 | 0·7 | 0·7 | 6 | 4 : — : — | 3·0 | Id. ; id. ⊖ |

The direction of the wind is indicated by the number of the point of the compass, reckoning N. = 0, E. = 8, S. = 16, W. = 24. The motions of the three strata of clouds, Sc. (scud), C.-s. (cirro-stratus), and Cir. (cirrus), are indicated in a similar manner.

| Gött. Mean Time. | Barometer at 32°. | Thermometers. Dry. | Wet. | Diff. | Wind. Maximum force in 1h. | 10m. | From | Clouds, Sc. : C.-s. : Ci., moving from | Sky clouded. | Species of Clouds and Meteorological Remarks. |
|---|---|---|---|---|---|---|---|---|---|---|
| d. h. | in. | ° | ° | ° | lbs. | lbs. | pt. | pt. pt. pt. | 0—10. | |
| 12 6 | 29·390 | 59·3 | 53·9 | †5·4 | 0·4 | 0·4 | 5 | 5 : — : — | 3·8 | Cumuli ; patches of cirro-cumulo-strati. |
| 7 | 400 | 58·3 | 54·0 | 4·3 | 0·3 | 0·3 | 4 | 2 : — : 30 | 6·0 | Id., cumulo-strati ; cirri. ◐ |
| 8 | 411 | 54·4 | 51·9 | ↓2·5 | 0·3 | 0·2 | 4 | 2 : — : — | 1·2 | Id., id. ; id. |
| 9 | 416 | 50·9 | 49·9 | 1·0 | 0·1 | 0·1 | 2 | | 0·5 | Id., id. ; id. ; cirro-strati. |
| 10 | 426 | 48·3 | 47·6 | 0·7 | 0·0 | 0·0 | 16 | — : 12 : — | 6·5 | Cirro-strati. |
| 11 | 436 | 51·0 | 49·7 | 1·3 | 0·0 | 0·0 | | | 9·7 | Scud ; cirro-strati. |
| 12 | 417 | 49·7 | 48·6 | 1·1 | 0·0 | 0·0 | | | 7·0 | Thin clouds. |
| 13 | 29·416 | 48·7 | 47·7 | 1·0 | 0·0 | 0·0 | | | 9·2 | Thin clouds. |
| 14 | 403 | 48·3 | 47·4 | 0·9 | 0·1 | 0·0 | | | 9·5 | Id. |
| 15 | 393 | 48·6 | 47·8 | 0·8 | 0·0 | 0·0 | 22 | | 9·8 | Id. |
| 16 | 384 | 47·6 | 46·7 | 0·9 | 0·0 | 0·0 | 22 | | 9·8 | Scud ; cumuli on NE. horizon. |
| 17 | 373 | 47·4 | 46·7 | 0·7 | 0·0 | 0·0 | 24 | 6 : — : — | 10·0 | Id. ; cirro-strati. |
| 18 | 363 | 47·5 | 46·7 | 0·8 | 0·0 | 0·0 | 28 | 7 : — : — | 10·0 | Id. ; id. |
| 19 | 360 | 48·4 | 47·4 | 1·0 | 0·0 | 0·0 | 24 | — : 20 : — | 9·9 | Cirro-cumulo-strati ; uniform cirro-strati ; sky to W. |
| 20 | 360 | 50·8 | 49·3 | 1·5 | 0·0 | 0·0 | 25 | — : 21 : — | 9·8 | Id. ; id. ; stratus to E. |
| 21 | 353 | 55·5 | 53·1 | 2·4 | 0·1 | 0·0 | 18 | | 9·8 | Id. ; loose cum. to N. and S. ; woolly cirri. ⊖ |
| 22 | 339 | 57·3 | 53·6 | 3·7 | 0·0 | 0·0 | 2 | | 9·9 | Ragged cumuli and loose scud ; cirrous clouds. ● |
| 23 | 327 | 60·3 | 55·6 | 4·7 | 0·0 | 0·0 | 26 | | 10·0 | Cirro-cumulous scud ; cirro-strati ; patches of scud. |
| 13 0 | 326 | 60·4 | 56·0 | 4·4 | 0·1 | 0·1 | 20 | — : 20 : — | 9·5 | Cir.-cum.-str. ; cumuli and cum.-str. |
| 1 | 310 | 63·8 | 59·0 | 4·8 | 0·1 | 0·1 | 18 | — : 19 : — | 7·5 | Id. ; id. ; wooly cirri. ◐ |
| 2 | 295 | 65·9 | 60·7 | 5·2 | 0·2 | 0·1 | 14 | 19 : — : — | 9·5 | Scud ; cumuli ; cum.-str. ; cir.-cum.-str. ; electric. |
| 3 | 282 | 59·2 | 58·0 | 1·2 | 0·2 | 0·1 | 11 | 20 : — : — | 9·5 | As before ; shower$^{1-4}$ ◐ |
| 4 | 262 | 61·4 | 58·0 | 3·4 | 0·1 | 0·2 | 21 | 20 : — : — | 10·0 | Scud ; cumulo-strati ; cirro-strati ; nimbi. ● |
| 5 | 257 | 59·2 | 56·0 | 3·2 | 0·2 | 0·2 | 22 | 20 : — : — | 10·0 | As before ; rain$^{0\cdot2}$ ; raining heavily to SW. |
| 6 | 255 | 55·1 | 53·8 | 1·3 | 0·2 | 0·0 | 28 | 20 : — : — | 10·0 | Scud ; cirro-stratous scud ; cir.-str. ; rain$^{1-2}$ since 5h. |
| 7 | 247 | 58·0 | 55·3 | 2·7 | 0·0 | 0·0 | 22 | 20 : — : — | 9·9 | Id. ; id. ; id. |
| 8 | 243 | 55·3 | 54·2 | 1·1 | 0·2 | 0·0 | 20 | 18 : 20 : — | 10·0 | Id. ; id. ; id. |
| 9 | 233 | 54·6 | 53·9 | 0·7 | 0·0 | 0·0 | 20 | 20 : — : — | 10·0 | Id. ; id. ; id. ; rain$^{1}$ |
| 10 | 222 | 54·2 | 53·6 | 0·6 | 0·0 | 0·0 | | | 10·0 | Id. ; id. ; id. ; rain$^{0\cdot5}$ |
| 11 | 203 | 54·1 | 53·7 | 0·4 | 0·0 | 0·0 | | | 10·0 | Id. ; id. ; id. ; rain$^{0\cdot5}$ |
| 12 | 188 | 53·8 | 53·3 | 0·5 | 0·0 | 0·0 | | | 7·5 | Id. ; sky in zenith. |
| 13 | 29·174 | 53·4 | 53·3 | 0·1 | 0·0 | 0·0 | | | 10·0 | Scud. |
| 14 | 155 | 52·9 | 52·5 | 0·4 | 0·0 | 0·0 | | | 10·0 | Id. |
| 15 | 140 | 51·9 | 51·3 | 0·6 | 0·0 | 0·0 | 20 | | 8·0 | Id. ; sky in zenith. |
| 16 | 119 | 49·5 | 48·7 | 0·8 | 0·1 | 0·0 | 20 | — : 17 : — | 9·0 | Cirro-cumulo-strati ; cirro-strati. |
| 17 | 101 | 47·5 | 47·0 | 0·5 | 0·0 | 0·0 | 23 | — : 20 : — | 7·0 | Id. ; id. |
| 18 | 089 | 48·6 | 48·0 | †0·6 | 0·1 | 0·0 | 22 | 23 : — : — | 9·7 | Smoky scud ; cir.-cum. ; cirro-strati ; cumuli to NE. |
| 19 | 076 | 50·0 | 49·3 | 0·7 | 0·0 | 0·0 | 25 | — : 26 : — | 9·7 | Cir.-str. scud ; cirro-cumuli ; cumulo-strati to NE. |
| 20 | 065 | 53·5 | 52·0 | ↓1·5 | 0·0 | 0·0 | 1 | 21 : 24 : — | 9·5 | Loose scud ; cirro-cumuli ; cirro-strati. |
| 21 | 061 | 58·3 | 56·2 | 2·1 | 0·1 | 0·0 | 14 | 24 : 26 : — | 9·5 | Id. ; cirro-cumulo-strati ; rain$^{0\cdot5}$ ⊖ |
| 22 | 064 | 57·8 | 54·3 | 3·5 | 0·0 | 0·0 | 15 | 24 : 28 : — | 7·0 | Scud, loose cumuli ; cir.-cum.-str. |
| 23 | 060 | 61·6 | 56·1 | 5·5 | 0·0 | 0·0 | 0 | 28 : 28 : — | 9·9 | Id., id. ; cirro-strati, moving slowly. ◐ |
| 14 0 | 063 | 61·4 | 56·2 | 5·2 | 0·1 | 0·1 | 26 | 1 : 28 : — | 9·0 | Id., cumuli ; cirro-cumulo-strati ; drops of rain. ● |
| 1 | 068 | 61·2 | 54·3 | 6·9 | 0·1 | 0·0 | 2 | 1 : — : — | 9·7 | Id., id. ; cirro-strati. |
| 2 | 078 | 59·8 | 54·8 | 5·0 | 0·0 | 0·0 | 23 | 3 : 28 : — | 7·0 | Id., id. ; cum.-str. ; woolly cir.-str., nimbi. ● |
| 3 | 086 | 65·3 | 58·3 | 7·0 | 0·1 | 0·0 | 16 | 3 : 28 : — | 9·0 | Id., id. ; cirro-strati. |
| 4 | 090 | 63·9 | 57·7 | 6·2 | 0·2 | 0·1 | 25 | 2 : 30 : — | 5·0 | Id., id. ; id. ; cirri ; nimbi to SE. |
| 5 | 109 | 61·7 | 55·0 | 6·7 | 0·5 | 0·7 | 31 | 28 : 30 : — | 6·5 | Id. ; cumulo-strati ; cirri ; cirro-strati. |
| 6 | 132 | 59·7 | 53·5 | †6·2 | 0·7 | 1·0 | 31 | 29 : — : — | 7·5 | As before ; range of cumuli on horizon. |
| 7 | 162 | 56·6 | 53·0 | 3·6 | 0·7 | 0·5 | 31 | 29 : 31 : — | 9·5 | Loose scud ; cirro-stratous scud ; nimbi ; woolly cirri. |
| 8 | 184 | 55·0 | 52·7 | 2·3 | 0·8 | 0·3 | 31 | 30 : 0 : — | 9·0 | Id. ; cirro-cumuli ; cirro-strati, cirri. |
| 9 | 208 | 53·5 | 51·5 | ↓2·0 | 0·2 | 0·1 | 0 | | 3·0 | Cirro-cumuli ; cirro-strati ; cirri. |
| 10 | 232 | 53·3 | 51·5 | 1·8 | 0·2 | 0·1 | 0 | | 9·3 | Scud ; id. |
| 11 | 236 | 53·8 | 51·6 | 2·2 | 0·3 | 0·2 | 29 | | 9·5 | Id. ; id. |
| 12 | 240 | 54·5 | 51·8 | 2·7 | 0·3 | 0·6 | 30 | | 10·0 | Scud and cirrous clouds ; very dark. |

The direction of the wind is indicated by the number of the point of the compass, reckoning N. = 0, E. = 8, S. = 16, W. = 24. The motions of the three strata of clouds, Sc. (scud), C.-s. (cirro-stratus), and Cir. (cirrus), are indicated in a similar manner.

| Gött. Mean Time. | | Barometer at 32°. | Thermometers. Dry. | Wet. | Diff. | Wind. Maximum force in 1h. | 10m. | From | Clouds, Sc. : C.-s. : Ci., moving from | Sky clouded. | Species of Clouds and Meteorological Remarks. |
|---|---|---|---|---|---|---|---|---|---|---|---|
| d. | h. | in. | ° | ° | ° | lbs. | lbs. | pt. | pt. pt. pt. | 0—10. | |
| 14 | 13 | 29·251 | 54·6 | 52·3 | 2·3 | 0·3 | 0·4 | 29 | | 10·0 | Scud and cirrous clouds; very dark. |
| | 14 | 260 | 53·5 | 52·5 | 1·0 | 0·7 | 0·4 | 29 | | 10·0 | Id.; id.; rain[1] |
| | 15 | 272 | 53·6 | 52·2 | 1·4 | 0·5 | 0·4 | 29 | | 10·0 | As before; rain till a few minutes ago. |
| | 16 | 280 | 54·1 | 51·9 | 2·2 | 0·7 | 0·6 | 29 | 0 : — : — | 10·0 | Scud, &c.; rain[1] |
| | 17 | 291 | 54·0 | 51·9 | 2·1 | 0·6 | 0·7 | 30 | 0 : 31 : — | 10·0 | Thin scud; thicker scud; cirro-strati; rain[1] |
| | 18 | 306 | 53·7 | 52·0 | 1·7 | 0·8 | 0·5 | 30 | 0 : — : — | 10·0 | Id.; uniform cirro-strati; rain[1] |
| | 19 | 335 | 54·2 | 52·5 | 1·7 | 1·0 | 0·6 | 30 | 0 : — : — | 10·0 | Id.; id.; rain[0·2] |
| | 20 | 357 | 52·6 | 52·0 | 0·6 | 1·2 | 0·7 | 31 | 0 : — : — | 10·0 | Id.; rain[2-3] |
| | 21 | 371 | 53·7 | 52·7 | 1·0 | 0·9 | 1·1 | 0 | 0 : — : — | 10·0 | Id.; dense cirro-stratus. |
| | 22 | 383 | 55·9 | 52·9 | 3·0 | 1·7 | 1·7 | 0 | 31 : — : — | 10·0 | Id.; id. |
| | 23 | 410 | 53·5 | 52·7 | 0·8 | 1·9 | 1·0 | 31 | 30 : — : — | 10·0 | Id.; rain[1] |
| 15 | 0 | 434 | 54·4 | 53·0 | 1·4 | 1·1 | 1·0 | 0 | 31 : — : — | 10·0 | Scud; dense cirro-strati; loose scud on hor.; rain[0·5] |
| | 1 | 450 | 55·7 | 53·2 | 2·5 | 0·8 | 0·6 | 0 | 31 : — : — | 10·0 | As before; thick wavy cirro-strati to NW. |
| | 2 | 470 | 56·8 | 53·4 | 3·4 | 1·0 | 0·6 | 31 | 31 : — : — | 10·0 | Id.; cirro-strati. |
| | 3 | 480 | 57·6 | 54·0 | 3·6 | 0·5 | 0·2 | 31 | — : 30 : — | 10·0 | Cirro-stratous scud. |
| | 4 | 493 | 58·6 | 54·3 | 4·3 | 0·2 | 0·1 | 1 | — : 31 : — | 9·9 | Id.; cir.-str, cirri; patches of scud; sky to N. |
| | 5 | 502 | 60·8 | 56·5 | 4·3 | 0·1 | 0·1 | 1 | — : 31 : — | 9·9 | As before; rainbow. |
| | 6 | 509 | 60·2 | 55·7 | 4·5 | 0·1 | 0·0 | 12 | 31 : 29 : — | 9·0 | Loose scud; cirro-stratous scud; cirro-cumulo-strati. |
| | 7 | 536 | 58·7 | 55·7 | 3·0 | 0·0 | 0·2 | 30 | 29 : 29 : — | 9·5 | As before; cirro-strati; rain[0·2] |
| | 8 | 545 | 56·8 | 54·9 | 1·9 | 0·1 | 0·1 | 28 | 29 : — : — | 9·9 | Id.; sky greenish; rain to NW. |
| | 9 | 556 | 55·9 | 54·4 | 1·5 | 0·1 | 0·0 | 22 | 29 : 29 : — | 10·0 | Scud and cirro-strati. |
| | 10 | 565 | 55·5 | 54·0 | 1·5 | 0·0 | 0·0 | 20 | | 10·0 | Id. |
| | 11 | 567 | 54·7 | 53·7 | 1·0 | 0·1 | 0·0 | | | 9·0 | Id.; black to E. |
| | 12 | 582 | 52·4 | 51·2 | 1·2 | 0·1 | 0·1 | 22 | | 8·0 | Id. |
| | 13 | 29·582 | 50·1 | 49·3 | 0·8 | 0·1 | 0·0 | | | 2·0 | Scud and cirro-strati. |
| | 14 | 586 | 49·3 | 48·7 | 0·6 | 0·1 | 0·0 | | | 9·7 | Thin clouds. |
| | 15 | 585 | 50·1 | 49·4 | 0·7 | 0·0 | 0·0 | | | 9·9 | Scud. |
| | 16 | 589 | 50·7 | 49·7 | 1·0 | 0·1 | 0·0 | 22 | | 10·0 | Id. |
| | 17 | 591 | 50·7 | 49·7 | 1·0 | 0·0 | 0·0 | 23 | 22 : — : — | 10·0 | Id.; cirro-stratous scud. |
| | 18 | 608 | 50·7 | 49·9 | 0·8 | 0·0 | 0·0 | 18 | 20 : — : — | 10·0 | Id.; id. |
| | 19 | 617 | 53·0 | 51·5 | 1·5 | 0·1 | 0·1 | 20 | 24 : 21 : — | 9·9 | Id.; cirro-cumulo-strati. ● |
| | 20 | 618 | 55·2 | 52·7 | 2·5 | 0·1 | 0·1 | 22 | — : 22 : — | 9·5 | Cirro-cumulo-strati; cir.-cum.; cirro-cumulous scud. |
| | 21 | 619 | 58·3 | 55·2 | 3·1 | 0·2 | 0·1 | 20 | — : 22 : — | 7·0 | Cirro-strati; cirro-cumuli; cumuli. ◐ |
| | 22 | 621 | 59·1 | 55·0 | 4·1 | 0·2 | 0·2 | 20 | 22 : 25 : — | 5·0 | Scud and loose cumuli; woolly cirri; cirro-strati. ◐ |
| | 23 | 612 | 60·7 | 56·6 | 4·1 | 0·2 | 0·2 | 20 | 16 : 18 : 28 | 6·5 | Thin scud; loose cumuli; id.; id. ⊙ |
| 16 | 0 | 606 | 65·4 | 58·1 | 7·3 | 0·4 | 0·2 | 18 | 22 : 18 : 28 | 5·0 | Scud; cumuli; varieties of cirri; cirrous haze. ⊙ |
| | 1 | 601 | 64·8 | 57·0 | 7·8 | 0·3 | 0·7 | 19 | 18 : 24 : — | 7·0 | As before. ⊙ |
| | 2 | 599 | 63·7 | 56·3 | 7·4 | 0·7 | 0·5 | 19 | 17 : — : 24 | 6·0 | Cumuli; varieties of cirri; cir. haze; cir.-cum.-str. ◐ |
| | 3 | 592 | 60·2 | 54·2 | 6·0 | 0·7 | 0·8 | 19 | 20 : 26 : — | 9·0 | Scud; cumulo-strati; cirro-strati; id. ● |
| | 4 | 581 | 60·5 | 54·4 | 6·1 | 0·9 | 0·4 | 20 | — : 22 : — | 9·3 | Wavy cirro-strati; cumulo-strati; id. |
| | 5 | 570 | 58·5 | 53·2 | 5·3 | 0·4 | 0·5 | 21 | — : 20 : — | 9·8 | Thick wavy cir.-str.; patches of scud; sky to NE. |
| | 6 | 568 | 53·0 | 51·4 | 1·6 | 0·6 | 0·4 | 22 | — : 20 : — | 10·0 | Scud; thick cirro-strati; rain[0·2] |
| | 7 | 544 | 52·8 | 51·9 | 0·9 | 0·4 | 0·1 | 20 | | 10·0 | Id.; id.; rain[0·5] |
| | 8 | 509 | 52·0 | 50·9 | 1·1 | 0·0 | 0·0 | 14 | 18 : 18 : — | 10·0 | Thick scud and dense cirro-strati. |
| | 9 | 489 | 51·0 | 50·6 | 0·4 | 0·2 | 0·1 | 16 | | 10·0 | Id.; rain[0·5] |
| | 10 | 453 | 49·8 | 49·5 | 0·3 | 0·2 | 0·1 | 14 | | 10·0 | Id.; id. |
| | 11 | 421 | 50·7 | 49·3 | 1·4 | 0·1 | 0·0 | | | 10·0 | Id.; id. |
| | 12 | 381 | 50·0 | 49·6 | 0·4 | 0·0 | 0·0 | | | 10·0 | Very dark; rain[0·2] |
| | 13 | 29·340 | 50·2 | 50·0 | 0·2 | 0·0 | 0·0 | | | 10·0 | Verk dark; rain[0·2] |
| | 14 | 310 | 51·2 | 50·8 | 0·4 | 0·1 | 0·0 | | | 10·0 | Id.; id. |
| | 15 | 281 | 51·2 | 50·1 | 1·1 | 0·0 | 0·0 | | | 10·0 | Id.; id. |
| | 16 | 272 | 51·9 | 51·3 | 0·6 | 0·0 | 0·0 | | | 10·0 | Rain[1] |
| | 17 | 274 | 51·7 | 51·2 | 0·5 | 0·1 | 0·1 | 27 | 27 : — : — | 10·0 | Scud; cirro-strati. |
| | 18 | 293 | 51·3 | 50·9 | 0·4 | 0·6 | 0·4 | 28 | 27 : — : — | 10·0 | Id.; id. |
| | 19 | 302 | 53·0 | 51·7 | 1·3 | 0·5 | 0·5 | 28 | 29 : — : — | 10·0 | Id.; id. |
| | 20 | 327 | 52·7 | 51·1 | 1·6 | 0·7 | 0·5 | 28 | 28 : — : — | 9·9 | Id.; id. |

The direction of the wind is indicated by the number of the point of the compass, reckoning N. = 0, E. = 8, S. = 16, W. = 24. The motions of the three strata of clouds, Sc. (scud), C.-s. (cirro-stratus), and Cir. (cirrus), are indicated in a similar manner.

| Gött. Mean Time. | Barometer at 32°. | Thermometers. Dry. | Wet. | Diff. | Wind. Maximum force in 1h. | 10m. | From | Clouds, Sc. : C.-s. : Ci., moving from | Sky clouded. | Species of Clouds and Meteorological Remarks. |
|---|---|---|---|---|---|---|---|---|---|---|
| d. h. | in. | ° | ° | ° | lbs. | lbs. | pt. | pt. pt. pt. | 0—10. | |
| 16 21 | 29·345 | 52·6 | 50·1 | 2·5 | 1·0 | 0·3 | 28 | 28 : — : — | 10·0 | Dense scud; cirro-strati. |
| 22 | 361 | 53·4 | 51·4 | 2·0 | 0·2 | 0·4 | 28 | 28 : — : — | 10·0 | Scud; dense cirro-strati. |
| 23 | 378 | 53·4 | 50·4 | 3·0 | 0·6 | 0·6 | 30 | 28 : — : — | 10·0 | Thick scud; drops of rain. |
| 17 0 | 399 | 53·5 | 50·5 | 3·0 | 1·1 | 0·6 | 28 | | 10·0 | Scud; dense cirro-strati and cirrous haze. |
| 1 | 415 | 52·9 | 49·6 | 3·3 | 1·5 | 1·3 | 27 | 28 : — : — | 10·0 | Id.; id. |
| 2 | 432 | 53·0 | 49·7 | 3·3 | 1·2 | 0·7 | 28 | | 10·0 | Id.; id.; rain0·5 |
| 3 | 452 | 51·3 | 50·0 | 1·3 | 1·1 | 0·7 | 28 | 28 : — : — | 10·0 | Id.; id.; rain0·2 |
| 4 | 464 | 55·0 | 51·5 | 3·5 | 1·7 | 0·9 | 27 | 28 : — : — | 10·0 | Id.; id. |
| 5 | 485 | 58·6 | 53·8 | 4·8 | 1·4 | 1·0 | 28 | 28 : — : — | 9·9 | Id.; cirro-strati; breaking to W. ⊙ |
| 6 | 511 | 57·7 | 52·9 | 4·8 | 1·4 | 0·5 | 29 | 28 : 26 : — | 9·0 | Two currents of scud; sky to W. ● |
| 7 | 529 | 56·6 | 52·2 | †4·4 | 0·9 | 0·5 | 31 | 28 : 30 : — | 7·5 | Scud; cir.-cum.; cumuli, nimbi; cumulo-strati. ◐ |
| 8 | 554 | 53·5 | 51·0 | ↓2·5 | 0·3 | 0·2 | 23 | 28 : — : — | 7·0 | Id.; cirri, cirro-strati; electric-looking. |
| 9 | 575 | 52·2 | 49·8 | 2·4 | 0·4 | 0·2 | 24 | — : 29 : — | 5·0 | Cirro-cumuli; cirro-strati; loose scud. |
| 10 | 596 | 50·9 | 48·7 | 2·2 | 0·2 | 0·4 | 22 | | 3·0 | Cirro-strati; scud. |
| 11 | 623 | 50·6 | 48·4 | 2·2 | 1·0 | 0·3 | 26 | 28 : — : — | 8·0 | Scud covering the sky rapidly; showers0·5-1·5 |
| 12 | 630 | 49·2 | 47·8 | 1·4 | 0·2 | 0·2 | 26 | 27 : — : — | 1·0 | Scud, cirro-strati, clear. |
| 23 | 29·809 | ... | ... | ... | 1·5 | 1·0 | 30 | | ..... | Sunday—Few clouds, cumuli and scud. |
| 18 4½ | ..... | 62·5 | 51·0 | 11·5 | ... | ... | ... | | ..... | |
| 13 | 29·914 | 46·2 | 45·0 | 1·2 | 3·3 | 0·0 | 24 | | 0·1 | Patches of thin clouds, clear. |
| 14 | 911 | 44·8 | 44·6 | 0·2 | 0·1 | 0·1 | 20 | | 0·0 | Clear. |
| 15 | 903 | 46·7 | 45·3 | 1·4 | 0·3 | 0·4 | 26 | | 0·0 | Id. |
| 16 | 891 | 46·7 | 45·3 | 1·4 | 0·4 | 0·1 | 23 | | 0·3 | Cirro-strati on horizon to E. and N. |
| 17 | 889 | 45·6 | 44·5 | 1·1 | 0·3 | 0·1 | 24 | | 0·3 | Cirro-strati and cirri on S., E., and N. horizon. |
| 18 | 889 | 45·8 | 44·3 | †1·5 | 0·2 | 0·1 | 20 | | 0·5 | Cirri, cir.-str.; mass of scud to N., strati on Cheviot. ⊙ |
| 19 | 888 | 47·8 | 46·2 | 1·6 | 0·1 | 0·1 | 18 | 28 : — : — | 0·8 | Pat. of scud to N., cir.-cum.-str. to W., and as at 18h. ⊙ |
| 20 | 877 | 52·0 | 49·0 | 3·0 | 0·5 | 0·5 | 22 | 27 : — : — | 1·8 | Scud, cir.-cum.-str., cir.-str., woolly, mottled, &c. cir. ⊙ |
| 21 | 862 | 55·4 | 50·4 | 5·0 | 0·6 | 0·7 | 29 | 26 : 29 : — | 3·0 | Scud, loose cumuli; cirro-cumuli; cirro-strati. |
| 22 | 842 | 58·0 | 54·0 | ↓4·0 | 0·6 | 0·7 | 26 | 26 : 29 : — | 4·5 | Id. |
| 23 | 831 | 59·2 | 55·4 | 3·8 | 0·9 | 0·8 | 28 | 26 : 29 : — | 9·0 | Loose scud; cir. scud; fine cir.-str. like large hills. |
| 19 0 | 824 | 58·2 | 52·9 | 5·3 | 1·3 | 1·0 | 28 | 26 : — : — | 9·8 | Scud; chiefly homogen. and wavy cirrous mass; rain0·5 |
| 1 | 812 | 55·0 | 53·7 | 1·3 | 0·5 | 0·3 | 24 | 26 : — : — | 10·0 | Id.; id.; rain1·0 |
| 2 | 798 | 55·4 | 53·3 | 2·1 | 0·3 | 0·2 | 22 | 25 : — : — | 10·0 | Much scud; homogeneous cirrous mass. |
| 3 | 770 | 57·6 | 54·9 | 2·7 | 0·2 | 0·1 | 22 | 23 : — : — | 10·0 | Id.; id. |
| 4 | 750 | 58·9 | 55·6 | 3·3 | 0·3 | 0·3 | 22 | 23 : — : — | 10·0 | Id.; id. |
| 5 | 735 | 58·8 | 56·0 | 2·8 | 0·5 | 0·3 | 21 | 24 : — : — | 9·9 | Id.; id.; greenish sky to NE. |
| 6 | 714 | 58·1 | 55·1 | 3·0 | 0·3 | 0·1 | 21 | 25 : — : — | 9·9 | Id.; id.; id. |
| 7 | 699 | 58·1 | 56·1 | 2·0 | 0·2 | 0·0 | 20 | 24 : — : — | 9·9 | Id.; cirro-strati; sky to NW. |
| 8 | 679 | 57·9 | 56·0 | 1·9 | 0·1 | 0·0 | 18 | 24 : — : — | 10·0 | Id.; id. |
| 9 | 662 | 58·3 | 56·8 | 1·5 | 0·1 | 0·1 | 23 | 24 : — : — | 9·9 | Id.; id.; clouds broken. |
| 10 | 643 | 58·7 | 57·3 | 1·4 | 0·2 | 0·0 | 20 | | 10·0 | Scud, dark. |
| 11 | 623 | 59·7 | 57·3 | 2·4 | 0·7 | 0·7 | 23 | | 2·5 | Id., clouds round horizon. |
| 12 | 602 | 59·2 | 56·9 | 2·3 | 1·2 | 1·7 | 23 | | 10·0 | Id. and cirrous haze. |
| 13 | 29·586 | 59·0 | 56·7 | 2·3 | 1·2 | 0·5 | 20 | | 9·0 | Scud and cirrous haze; clouds broken. |
| 14 | 576 | 58·9 | 56·2 | 2·7 | 1·2 | 0·7 | 23 | | 10·0 | Id. |
| 15 | 562 | 57·9 | 55·2 | 2·7 | 0·7 | 0·3 | 23 | | 7·0 | Id.; clouds broken; stars dim. |
| 16 | 547 | 55·5 | 52·2 | 3·3 | 0·4 | 0·3 | 26 | — : 25 : — | 8·5 | Cirro-cumuli; scud and cirro-strati; cirri to N. |
| 17 | 528 | 55·9 | 52·5 | 3·4 | 0·7 | 0·7 | 25 | 25 : — : 24 | 3·5 | Scud; woolly cirri; cirro-strati; bank of scud to S. |
| 18 | 520 | 55·3 | 51·9 | †3·4 | 1·6 | 0·8 | 22 | 26 : — : 25 | 2·5 | Id.; id.; id.; id. ◐ |
| 19 | 523 | 55·5 | 51·1 | 4·4 | 1·2 | 0·4 | 22 | 25 : 25 : 25 | 7·0 | Patches of loose scud; cir.-cum. and woolly cirri. ◐ |
| 20 | 509 | 55·0 | 50·7 | 4·3 | 1·0 | 1·4 | 23 | 26 : 25 : 25 | 3·5 | Scud; id. ⊙ |
| 21 | 510 | 56·9 | 51·4 | ↓5·5 | 2·2 | 1·4 | 23 | 26 : — : — | 4·0 | Id.; cirro-strati, parallel cirri. ⊙ |
| 22 | 508 | 57·3 | 51·2 | 6·1 | 1·6 | 2·3 | 22 | | 1·0 | Masses of loose cumuli and cirro-strati on horizon. ⊙ |
| 23 | 498 | 57·6 | 50·9 | 6·7 | 1·8 | 2·0 | 25 | 26 : — : — | 2·5 | Scud and loose cumuli. ⊙ |
| 20 0 | 491 | 59·0 | 51·5 | 7·5 | 2·0 | 1·3 | 24 | 26 : — : — | 6·5 | Id. ⊖ |
| 1 | 474 | 60·2 | 51·6 | 8·6 | 3·0 | 1·4 | 25 | 26 : — : — | 4·0 | Id. ⊙ |

The direction of the wind is indicated by the number of the point of the compass, reckoning N. = 0, E. = 8, S. = 16, W. = 24. The motions of the three strata of clouds, Sc. (scud), C.-s. (cirro-stratus), and Cir. (cirrus), are indicated in a similar manner.

Aug. 18d 20h. The cirri project long black shadows on the rather milky sky.

| Gött. Mean Time. | | Barometer at 32°. | Thermometers. Dry. | Wet. | Diff. | Wind. Maximum force in 1h. | 10m. | From | Clouds, Sc. : C.-s. : Ci., moving from | Sky clouded. | Species of Clouds and Meteorological Remarks. |
|---|---|---|---|---|---|---|---|---|---|---|---|
| d. | h. | in. | ° | ° | ° | lbs. | lbs. | pt. | pt. pt. pt. | 0—10. | |
| 20 | 2 | 29·462 | 61·6 | 53·1 | 8·5 | 2·8 | 1·9 | 26 | 26 : — : — | 8·5 | Scud and loose cumuli. ◐ |
| | 3 | 458 | 61·2 | 53·8 | 7·4 | 2·2 | 1·2 | 27 | 26 : — : — | 9·7 | Id. |
| | 4 | 452 | 60·0 | 52·8 | 7·2 | 2·1 | 2·0 | 25 | 26 : — : — | 9·9 | Scud, cirro-cumulous scud; rain to NE. |
| | 5 | 443 | 60·3 | 53·7 | 6·6 | 2·9 | 1·1 | 26 | 28 : — : — | 6·5 | Id., loose cumuli; id. ⊙ |
| | 6 | 450 | 58·7 | 52·9 | 5·8 | 1·6 | 0·5 | 30 | | 9·9 | Id., cirro-stratous scud; shower$^{3-4}$; rainbow. |
| | 7 | 476 | 53·0 | 52·0 | †1·0 | 2·0 | 0·1 | 26 | 26 : 29 : — | 7·0 | Id., loose cumuli; cirro-stratous scud, cirro-strati. |
| | 8 | 476 | 51·8 | 48·8 | ‡3·0 | 0·4 | 0·2 | 28 | 27 : — : — | 7·0 | Id., cirro-cumulous scud, cirro-cumuli. |
| | 9 | 486 | 51·9 | 48·3 | 3·6 | 0·4 | 0·2 | 30 | | 9·9 | Id., cirro-stratous scud. |
| | 10 | 493 | 51·0 | 47·8 | 3·2 | 0·3 | 0·2 | 29 | | 5·0 | Id. |
| | 11 | 494 | 49·9 | 47·0 | 2·9 | 0·2 | 0·2 | 28 | | 9·5 | Id. |
| | 12 | 496 | 49·8 | 47·0 | 2·8 | 0·4 | 0·1 | 27 | | 8·5 | Id., cirro-stratous scud. |
| | 13 | 29·478 | 49·3 | 46·6 | 2·7 | 0·4 | 0·2 | 25 | | 9·2 | Scud, cirro-stratous scud. |
| | 14 | 474 | 48·0 | 46·1 | 1·9 | 0·2 | 0·1 | 22 | | 9·8 | Id. |
| | 15 | 465 | 48·7 | 46·6 | 2·1 | 0·2 | 0·2 | 21 | | 9·9 | Id. |
| | 16 | 455 | 48·8 | 46·4 | 2·4 | 0·3 | 0·2 | 21 | | 8·0 | Cirro-stratous scud, cirri. |
| | 17 | 435 | 48·6 | 46·3 | 2·3 | 0·3 | 0·2 | 22 | — : 30 : — | 9·5 | Cirro-cumulo-strati; scud on horizon. |
| | 18 | 429 | 49·9 | 47·1 | 2·8 | 0·4 | 0·4 | 22 | — : 30 : — | 9·9 | Cir.-cum.-str. to S.; thick and wavy cir.-str.; scud to S. |
| | 19 | 422 | 50·8 | 47·6 | 3·2 | 0·5 | 0·5 | 26 | 28 : — : — | 10·0 | Loose scud, dense cirro-strati. |
| | 20 | 425 | 52·4 | 48·9 | 3·5 | 0·6 | 0·5 | 25 | 28 : — : — | 10·0 | Id., id. |
| | 21 | 433 | 53·0 | 49·5 | 3·5 | 0·5 | 0·5 | 23 | 28 : — : — | 10·0 | Id., id.; rain$^{0·2}$ |
| | 22 | 429 | 54·2 | 51·2 | 3·0 | 0·6 | 0·4 | 23 | 28 : — : — | 10·0 | Id., id. |
| | 23 | 421 | 55·0 | 51·3 | 3·7 | 0·4 | 0·3 | 20 | 28 : — : — | 9·9 | Id., cirri and cirro-strati. |
| 21 | 0 | 426 | 56·3 | 52·3 | 4·0 | 0·6 | 0·6 | 25 | 27 : — : — | 10·0 | Id., id. |
| | 1 | 415 | 57·2 | 51·3 | 5·9 | 0·7 | 1·2 | 28 | 28 : — : — | 10·0 | Id., cirro-strati. |
| | 2 | 412 | 59·0 | 53·5 | 5·5 | 0·6 | 0·6 | 28 | 28 : 0 : — | 10·0 | Id., thick cirro-strati. |
| | 3 | 412 | 59·4 | 53·0 | 6·4 | 0·7 | 0·5 | 28 | 29 : 28 : — | 9·9 | Id., id. |
| | 4 | 406 | 60·5 | 54·0 | 6·5 | 0·9 | 0·7 | 28 | 27 : 31 : — | 9·8 | Id., cirro-cumulous scud, cirro-strati. |
| | 5 | 414 | 58·0 | 52·2 | 5·8 | 0·7 | 0·4 | 30 | 28 : — : — | 10·0 | Id., cirro-strati. |
| | 6 | 414 | 56·6 | 51·0 | 5·6 | 0·6 | 0·4 | 30 | — : 28 : — | 9·9 | Cirro-stratous scud, thick and wavy cirro-strati. |
| | 7 | 420 | 55·4 | 50·3 | 5·1 | 0·7 | 0·3 | 30 | — : 28 : — | 10·0 | Id., id. |
| | 8 | 419 | 54·6 | 50·0 | 4·6 | 0·7 | 0·4 | 30 | — : 28 : — | 9·5 | Id., cir.-cum.-str.; scud on Cheviot. |
| | 9 | 435 | 53·2 | 49·8 | 3·4 | 0·5 | 0·2 | 30 | — : 28 : — | 9·5 | Id., id.; id. |
| | 10 | 443 | 52·6 | 49·3 | 3·3 | 0·2 | 0·0 | 29 | | 9·8 | Id., cirro-strati, cirrous haze. |
| | 11 | 445 | 51·8 | 49·2 | 2·6 | 0·1 | 0·1 | | | 10·0 | Id. |
| | 12 | 443 | 50·9 | 49·0 | 1·9 | 0·0 | 0·1 | | | 10·0 | Id. |
| | 13 | 29·442 | 51·3 | 49·1 | 2·2 | 0·0 | 0·0 | | | 10·0 | Cirro-stratous scud. |
| | 14 | 433 | 50·6 | 49·2 | 1·4 | 0·0 | 0·0 | | | 10·0 | Id. |
| | 15 | 434 | 50·2 | 48·9 | 1·3 | 0·0 | 0·0 | | | 10·0 | Id. |
| | 16 | 419 | 50·0 | 49·0 | 1·0 | 0·0 | 0·0 | | | 10·0 | Id. |
| | 17 | 419 | 49·8 | 48·9 | 0·9 | 0·0 | 0·0 | | | 10·0 | Scud and cirrous clouds; rain$^{0·5}$ |
| | 18 | 411 | 49·8 | 49·1 | 0·7 | 0·0 | 0·0 | | | 10·0 | Id.; id. |
| | 19 | 407 | 51·4 | 50·3 | 1·1 | 0·0 | 0·0 | 22 | 26 : — : — | 10·0 | Scud; dense homogeneous cirro-strati; rain$^{0·5}$ |
| | 20 | 410 | 52·5 | 51·4 | 1·1 | 0·0 | 0·0 | 24 | 24 : 27 : — | 10·0 | Loose dripping scud; cirrous mass; rain$^{0·2}$ |
| | 21 | 410 | 51·8 | 51·0 | 0·8 | 0·1 | 0·1 | 22 | 22 : — : — | 10·0 | Id.; id.; id. |
| | 22 | 404 | 54·0 | 52·4 | 1·6 | 0·0 | 0·0 | 24 | 22 : — : — | 10·0 | Id.; id. |
| | 23 | 401 | 54·8 | 53·0 | 1·8 | 0·1 | 0·0 | 17 | | 10·0 | Id.; id.; rain$^{0·5}$ |
| 22 | 0 | 393 | 54·2 | 52·2 | 2·0 | 0·1 | 0·0 | 28 | 20 : — : — | 10·0 | Id.; id. |
| | 1 | 390 | 54·4 | 52·2 | 2·2 | 0·0 | 0·0 | 30 | | 10·0 | Id., nearly homogeneous; rain$^{0·5}$ |
| | 2 | 380 | 55·2 | 52·9 | 2·3 | 0·1 | 0·1 | 30 | 26 : — : — | 10·0 | Id., id.; rain$^{0·8}$ |
| | 3 | 375 | 56·4 | 54·7 | 1·7 | 0·0 | 0·0 | 14 | 26 : — : — | 10·0 | Loose scud; cirrous mass; clouds thinner; rain$^{0·5}$ |
| | 4 | 370 | 55·3 | 53·4 | 1·9 | 0·1 | 0·0 | 18 | 25 : — : — | 10·0 | Id.; id.; id. |
| | 5 | 363 | 54·9 | 52·4 | 2·5 | 0·1 | 0·0 | 20 | 24 : — : — | 10·0 | Id.; id. |
| | 6 | 359 | 54·1 | 52·4 | 1·7 | 0·0 | 0·1 | 24 v. | 24 : — : — | 10·0 | Id.; id.; rain$^{0·2}$ |
| | 7 | 358 | 53·2 | 52·0 | 1·2 | 0·0 | 0·0 | 14 | 26 : — : — | 10·0 | Id.; cirro-stratous scud, cir. mass; rain to E. |
| | 8 | 353 | 51·5 | 50·5 | 1·0 | 0·0 | 0·0 | 20 | 24 : — : — | 10·0 | Id.; id., id. |
| | 9 | 359 | 50·9 | 50·1 | 0·8 | 0·1 | 0·0 | 18 | 25 : — : — | 10·0 | Id.; id., id.; rain$^{0·2}$ |

The direction of the wind is indicated by the number of the point of the compass, reckoning N. = 0, E. = 8, S. = 16, W. = 24. The motions of the three strata of clouds, Sc. (scud), C.-s. (cirro-stratus), and Cir. (cirrus), are indicated in a similar manner.

| Gött. Mean Time. | Barometer at 32°. | Thermometers. Dry. | Wet. | Diff. | Wind. Maximum force in 1h. | 10m. | From | Clouds, Sc. : C.-s. : Ci., moving from | Sky clouded. | Species of Clouds and Meteorological Remarks. |
|---|---|---|---|---|---|---|---|---|---|---|
| d. h. | in. | ° | ° | ° | lbs. | lbs. | pt. | pt. pt. pt. | 0—10. | |
| 22 10 | 29·361 | 50·7 | 50·0 | 0·7 | 0·1 | 0·1 | 19 | | 10·0 | Nearly as before; rain0·5 |
| 11 | 360 | 50·1 | 49·8 | 0·3 | 0·1 | 0·0 | | | 10·0 | Scud; id. |
| 12 | 359 | 49·9 | 49·4 | 0·5 | 0·2 | 0·1 | | | 10·0 | Id.; dark; rain1·0 |
| 13 | 29·349 | 49·8 | 49·4 | 0·4 | 0·1 | 0·0 | 24 | | 10·0 | Scud; dark. |
| 14 | 348 | 50·0 | 49·4 | 0·6 | 0·1 | 0·0 | 25 | | 10·0 | Id. |
| 15 | 340 | 50·0 | 49·4 | 0·6 | 0·1 | 0·0 | 22 | | 10·0 | Id. |
| 16 | 341 | 50·0 | 49·5 | 0·5 | 0·1 | 0·0 | 18 | | 10·0 | Id. |
| 17 | 333 | 50·5 | 49·7 | 0·8 | 0·0 | 0·0 | 20 | 24 : — : — | 10·0 | Id.; cirro-strati and cirrous mass. |
| 18 | 341 | 50·7 | 49·9 | 0·8 | 0·1 | 0·0 | 21 | 24 : — : — | 10·0 | Id.; id. |
| 19 | 350 | 51·3 | 50·2 | 1·1 | 0·1 | 0·1 | 20 | 22 : 24 : — | 10·0 | Stratous scud to E.; cirro-stratous scud; cirrous mass. |
| 20 | 354 | 53·1 | 51·6 | 1·5 | 0·1 | 0·1 | 20 | 22 : 24 : — | 9·9 | Nearly as at 19h. |
| 21 | 369 | 56·5 | 53·9 | 2·6 | 0·2 | 0·1 | 20 | 22 : — : — | 9·9 | Scud; cirro-strati. |
| 22 | 377 | 56·7 | 53·9 | 2·8 | 0·1 | 0·1 | 21 | 22 : 24 : — | 9·9 | Id.; id. |
| 23 | 384 | 58·4 | 54·2 | 4·2 | 0·1 | 0·0 | 22 | 21 : 22 : — | 9·8 | Id., cumuli; cirro-cumulo-strati, cirri. |
| 23 0 | 381 | 63·6 | 57·8 | 5·8 | 0·1 | 0·1 | 21 | 23 : — : — | 9·5 | Id., cirro-cumulo-strati; cumulo-strati, cirri. |
| 1 | 381 | 62·6 | 56·4 | 6·2 | 0·2 | 0·2 | 20 | 23 : — : — | 9·2 | Nearly as last hour. |
| 2 | 381 | 64·2 | 56·7 | 7·5 | 0·3 | 0·2 | 24 | 22 : 23 : — | 8·2 | Scud, cumuli, cum.-str; woolly cirro-cumuli, cirri. ⊖ |
| 3 | 380 | 62·9 | 55·7 | 7·2 | 0·3 | 0·2 | 22 | 22 : — : — | 7·8 | Nearly as before; nimbi. ⊖ |
| 4 | 385 | 61·8 | 55·0 | 6·8 | 0·3 | 0·2 | 25 | 22 : — : — | 9·5 | Id.; id. |
| 5 | 396 | 60·2 | 55·0 | 5·2 | 0·3 | 0·2 | 19 | 23 : 22 : — | 9·8 | Masses of scud, cumuli, cumulo-strati; nimbi, cirri, [cir.-cum.-str. |
| 6 | 407 | 55·7 | 54·0 | 1·7 | 0·4 | 0·3 | 18 | 22 : — : — | 9·8 | Nearly as last hour; rain3 |
| 7 | 419 | 55·0 | 52·4 | 2·6 | 0·3 | 0·1 | 24 | 22 : — : — | 9·7 | Masses of scud, cir.-str. scud; cirri and cirro-strati. |
| 8 | 436 | 54·1 | 52·1 | 2·0 | 0·1 | 0·1 | 24 | 21 : — : — | 9·9 | Id., id.; id. |
| 9 | 447 | 53·8 | 51·9 | 1·9 | 0·3 | 0·1 | 22 | — : 17 : — | 9·5 | Large cirro-cumuli; scud and cirro-strati. |
| 10 | 449 | 52·2 | 50·8 | 1·4 | 0·1 | 0·1 | 18 | — : 19 : — | 6·5 | Id.; id. |
| 11 | 456 | 49·2 | 48·7 | 0·5 | 0·1 | 0·1 | 20 | | 5·0 | Cirro-cumulo-strati, cirro-strati. |
| 12 | 464 | 48·5 | 48·0 | 0·5 | 0·1 | 0·1 | 20 | | 9·0 | Id., id. |
| 13 | 29·465 | 50·0 | 49·4 | 0·6 | 0·1 | 0·0 | 20 | | 9·8 | Cirro-cumulo-strati, cir.-str. |
| 14 | 471 | 49·6 | 49·0 | 0·6 | 0·0 | 0·0 | | | 9·9 | Id., id. |
| 15 | 470 | 49·7 | 49·2 | 0·5 | 0·0 | 0·0 | | | 9·8 | Id.? id. |
| 16 | 477 | 49·0 | 48·6 | 0·4 | 0·0 | 0·0 | 18 | | 8·8 | Id., id., cirri. |
| 17 | 482 | 46·7 | 46·5 | 0·2 | 0·0 | 0·0 | 18 | | 3·0 | Id., id., id., mist on the ground. |
| 18 | 497 | 45·0 | 44·7 | 0·3 | 0·0 | 0·0 | 20 | — : 10 : 21 | 6·0 | Cir.-cum.-str.; mottled and linear cirri; id. |
| 19 | 520 | 49·3 | 48·5 | †0·8 | 0·0 | 0·0 | 23 | | 2·5 | Cirri; cirro-strati on horizon. |
| 20 | 526 | 50·4 | 49·5 | 0·9 | 0·0 | 0·0 | 23 | — : — : 10 | 2·5 | Curled, reticulated, and woolly cirri; cirro-strati. ⊙ |
| 21 | 536 | 53·3 | 52·0 | ↓1·3 | 0·1 | 0·1 | 16 | — : — : 13 | 3·0 | Id., id., id.; range of cum. to N. ⊙ |
| 22 | 539 | 56·2 | 53·7 | 2·5 | 0·1 | 0·0 | 12 | — : — : 14 | 4·5 | Curled and woolly cir.; range of cum. round hor. ◐ |
| 23 | 543 | 58·7 | 54·4 | 4·3 | 0·1 | 0·1 | 11 | — : — : 18 | 4·0? | Id.; id. ◐ |
| 24 0 | 542 | 60·6 | 55·4 | 5·2 | 0·1 | 0·1 | 10 | 10 : — : — | 3·5 | Loose cumuli; cumuli, cirro-cumuli, and cir.-str. ⊙ |
| 1 | 542 | 61·8 | 54·9 | 6·9 | 0·2 | 0·0 | 10 | 10 : — : — | 2·5 | Id.; id., id., id. ⊙ |
| 2 | 543 | 62·2 | 55·0 | 7·2 | 0·2 | 0·1 | 10 | 11 : — : — | 3·5 | Id.; id., id., id. ⊖ |
| 3 | 543 | 63·3 | 55·7 | 7·6 | 0·2 | 0·4 | 8 | 20 : — : — | 8·0 | Scud and loose cumuli; piles of cumuli, id. |
| 4 | 550 | 61·6 | 56·5 | 5·1 | 0·4 | 0·2 | 4 | 4 : 24 : — | 5·0 | Id.; id., id. ◐ |
| 5 | 556 | 60·2 | 54·8 | 5·4 | 0·4 | 0·2 | 6 | 4 : 24 : — | 6·5 | Scud; cumulo-strati, cirro-cumulo-strati; hazy. ⊖ |
| 6 | 560 | 59·1 | 54·0 | †5·1 | 0·3 | 0·1 | 6 | St. : 28 : — | 5·0 | Nearly as at 5h; scud dissipating. ● |
| 7 | 577 | 56·8 | 53·8 | ↓3·0 | 0·1 | 0·0 | 18 | — : 28 : — | 7·5 | Id. |
| 8 | 589 | 54·6 | 51·9 | 2·7 | 0·1 | 0·0 | 22 | — : 30 : — | 3·0 | Cirro-cumulo-strati. |
| 9 | 597 | 49·6 | 48·8 | 0·8 | 0·1 | 0·0 | 22 | | 1·0 | Id. |
| 10 | 600 | 46·8 | 46·6 | 0·2 | 0·1 | 0·0 | 18 | | 0·8 | Id.; mist on the ground. |
| 11 | 607 | 44·2 | 43·9 | 0·3 | 0·0 | 0·0 | 23 | | 3·0 | Id., id. |
| 12 | 606 | 44·3 | 44·2 | 0·1 | 0·1 | 0·0 | 20 | | 2·0 | Id., haze. |
| 22½ | 29·648 | 59·9 | 54·6 | 5·3 | 0·4 | ... | 24 | | ..... | Sunday—Cloudy, cir.-cum.-str., scud, occasional sunshine. |
| 25 13 | 29·710 | 50·4 | 47·1 | 3·3 | 0·6 | 0·1 | 20 | | 10·0 | Scud, cirro-cumulo-strati. |
| 14 | 713 | 49·5 | 46·8 | 2·7 | 0·2 | 0·1 | | | 10·0 | Id., id. |
| 15 | 715 | 49·5 | 47·1 | 2·4 | 0·1 | 0·0 | | | 10·0 | Id., id. |

The direction of the wind is indicated by the number of the point of the compass, reckoning N. = 0, E. = 8, S. = 16, W. = 24. The motions of the three strata of clouds, Sc. (scud), C.-s. (cirro-stratus), and Cir. (cirrus), are indicated in a similar manner.

Aug. 23d 19h. Observation made at 19h 45m.

Aug. 24d 5h. Clouds electric-looking; a peal of distant thunder heard; black to W.

| Gött. Mean Time. | Barometer at 32°. | Thermometers. Dry. | Wet. | Diff. | Wind. Maximum force in 1h. | 10m. | From | Clouds, Sc. : C.-s. : Ci., moving from | Sky clouded. | Species of Clouds and Meteorological Remarks. |
|---|---|---|---|---|---|---|---|---|---|---|
| d. h. | in. | ° | ° | ° | lbs. | lbs. | pt. | pt. pt. pt. | 0—10. | |
| 25 16 | 29·724 | 48·7 | 46·8 | 1·9 | 0·0 | 0·0 | | | 10·0 | Scud, cirro-cumulo-strati. |
| 17 | 736 | 48·2 | 46·6 | 1·6 | 0·0 | 0·0 | | | 10·0 | Id., id. |
| 18 | 748 | 48·5 | 46·9 | 1·6 | 0·0 | 0·0 | | | 10·0 | Id., id. |
| 19 | 764 | 50·0 | 48·4 | 1·6 | 0·0 | 0·0 | 20 | — : 23 : — | 10·0 | Cirro-stratous scud; loose scud. |
| 20 | 771 | 52·5 | 49·3 | 3·2 | 0·0 | 0·0 | 22 | | 10·0 | Id.; id.; cirro-cumulo-strati. |
| 21 | 770 | 53·4 | 48·9 | 4·5 | 0·2 | 0·1 | 29 | — : 29 : — | 9·5 | Cirro-cumulo-strati; scud on horizon. |
| 22 | 770 | 56·1 | 48·4 | 7·7 | 0·3 | 0·4 | 28 | — : 28 : — | 9·9 | Id.; id. |
| 23 | 765 | 56·3 | 48·2 | 8·1 | 0·7 | 0·2 | 29 | — : 28 : — | 7·0 | Id.; cirri and cirro-strati. ⊖ |
| 26 0 | 763 | 57·5 | 49·6 | 7·9 | 0·4 | 0·2 | 28 | — : 28 : — | 8·0 | Id.; cirri. ● |
| 1 | 754 | 60·2 | 51·5 | 8·7 | 0·5 | 0·4 | 23 | — : 28 : — | 8·0 | Id.; id. ◐ |
| 2 | 747 | 60·0 | 51·5 | 8·5 | 0·8 | 0·6 | 22 | — : 28 : — | 8·0 | Id.; cirrous haze on horizon. ⊖ |
| 3 | 739 | 61·8 | 53·4 | 8·4 | 1·3 | 0·6 | 25 | — : 28 : — | 8·5 | Id.; id. ⊖ |
| 4 | 743 | 60·2 | 52·0 | 8·2 | 1·5 | 0·7 | 27 | — : 28 : — | 9·0 | Id.; id. ⊖ |
| 5 | 739 | 60·0 | 52·0 | 8·0 | 1·2 | 1·1 | 27 | — : 28 : — | 8·5 | Id.; id. ⊖ |
| 6 | 740 | 55·7 | 50·7 | †5·0 | 0·9 | 0·2 | 26 | — : 27 : — | 3·0 | Cirro-cumulous scud; cirro-cumuli, cir. haze, cir-str. |
| 7 | 745 | 54·3 | 49·3 | 5·0 | 2·2 | 0·7 | 26 | — : 27 : — | 2·0 | Id.; id. ⊙ |
| 8 | 766 | 51·2 | 47·9 | ↓3·3 | 0·6 | 0·2 | 26 | — : 27 : — | 1·0 | Cirro-stratous scud; cirrous haze. ☽ |
| 9 | 764 | 50·5 | 47·0 | 3·5 | 0·3 | 0·2 | 24 | | 0·4 | Cirro-strati. |
| 10 | 763 | 49·2 | 45·6 | 3·6 | 0·2 | 0·3 | 25 | | 0·2 | Id.; cirrous haze on horrizon. ☽ |
| 11 | 776 | 46·3 | 44·2 | 2·1 | 0·3 | 0·2 | 24 | | 0·2 | Id.; id. ☽ |
| 12 | 787 | 46·0 | 43·9 | 2·1 | 0·3 | 0·1 | 16 | 28 : — : 28 | 0·8 | Cirro-stratous scud; thin cirri; lunar corona. ☽ |
| 13 | 29·800 | 43·3 | 42·3 | 1·0 | 0·1 | 0·0 | 14 | | 1·8 | Scud; sheets of thin cirri; lunar corona. ☽ |
| 14 | 812 | 42·0 | 41·7 | 0·3 | 0·1 | 0·0 | 20 | 28 : — : 28 | 5·0 | Cirro-cumulous scud; thin cirri. ☽ |
| 15 | 809 | 42·6 | 41·5 | 1·1 | 0·0 | 0·0 | 17 | | 0·2 | Sheet of thin cirri. ☽ |
| 16 | 809 | 38·9 | 38·7 | 0·2 | 0·1 | 0·0 | 17 | | 0·5 | Id.; lunar corona of an elliptic form. ☽ |
| 17 | 806 | 38·9 | 38·0 | 0·9 | 0·0 | 0·0 | 18 | | 0·5 | Id. |
| 18 | 815 | 38·5 | 38·0 | †0·5 | 0·1 | 0·1 | 18 | — : — : 28 | 3·0 | Thin sheets of woven cirri; strati on Cheviot. ⊙ |
| 19 | 830 | 40·6 | 39·9 | 0·7 | 0·1 | 0·1 | 22 | — : — : 29 | 5·0 | Woolly cirri over most of the sky; haze on hor. ⊙ |
| 20 | 833 | 45·4 | 43·4 | 2·0 | 0·2 | 0·2 | 20 | — : — : 29 | 4·0 | Id.; id. ⊙ |
| 21 | 834 | 49·7 | 45·0 | ↓4·7 | 0·2 | 0·2 | 22 | — : — : 28 | 2·0 | Linear cirri and haze round horizon. ⊙ |
| 22 | 839 | 51·3 | 43·9 | 7·4 | 0·2 | 0·2 | 24 | — : — : 28 | 2·0 | Woolly cirri; band of cir.-str. to E.; haze on hor. ⊙ |
| 23 | 835 | 53·9 | 47·0 | 6·9 | 0·3 | 0·3 | 26 | | 1·0 | Cirri and haze on horizon. ⊙ |
| 27 0 | 828 | 56·5 | 50·0 | 6·5 | 0·5 | 0·4 | 22 | 28 : — : — | 0·5 | A few patches of scud; cirro-strati; haze. ⊙ |
| 1 | 825 | 58·2 | 50·0 | 8·2 | 0·4 | 0·5 | 22 | | 1·0 | Linear cirri; haze to E. ⊙ |
| 2 | 822 | 60·2 | 51·0 | 9·2 | 0·7 | 0·5 | 25 | — : — : 27 | 1·5 | Woolly, mottled, and linear cirri; cirro-strati. ⊙ |
| 3 | 819 | 61·0 | 53·0 | 8·0 | 0·7 | 0·5 | 23 | — : — : 27 | 2·0 | Id. ⊙ |
| 4 | 818 | 61·4 | 52·2 | 9·2 | 0·5 | 0·4 | 25 | 27 : — : 27 | 2·0 | Cirri; scud; cirro-strati; haze. ⊙ |
| 5 | 820 | 60·0 | 51·8 | 8·2 | 0·3 | 0·3 | 28 | 28 : — : — | 5·0 | Nearly as before. ⊙ |
| 6 | 824 | 58·9 | 51·2 | †7·7 | 0·4 | 0·4 | 27 | — : — : 26 | 4·5 | Varieties of cirri; cir.-str. scud; cirro-strati; hazy. ◐ |
| 7 | 841 | 54·2 | 49·6 | ↓4·6 | 0·3 | 0·1 | 25 | — : — : 26 | 7·0 | Nearly as at 6h; woolly cirro-cumuli. ◐ |
| 8 | 856 | 50·8 | 47·2 | 3·6 | 0·1 | 0·1 | 30 | — : 26 : 26 | 3·5 | Bands of woolly cirri; cir.-cum.; cir.-str.; hazy. ☽ |
| 9 | 871 | 49·0 | 46·1 | 2·9 | 0·1 | 0·0 | 20 | — : 26 : 26 | 2·8 | Nearly as before. ☽ |
| 10 | 876 | 46·8 | 45·1 | 1·7 | 0·0 | 0·0 | 30 | — : 27 : — | 9·8 | Cirro-cumulo-strati. ☽ |
| 11 | 875 | 45·0 | 44·0 | 1·0 | 0·0 | 0·0 | 29 | — : 28 : — | 5·0 | Id.; cirro-strati; hazy. ☽ |
| 12 | 885 | 44·0 | 43·3 | 0·7 | 0·1 | 0·0 | 29 | — : 28 : — | 7·0 | Nearly as before. ☽ |
| 13 | 29·886 | 45·2 | 44·2 | 1·0 | 0·0 | 0·0 | 31 | — : 28 : — | 10·0 | Cirro-cumulo-strati; cirro-strati; haze. |
| 14 | 882 | 46·2 | 45·0 | 1·2 | 0·1 | 0·0 | 22 | — : 28 : — | 10·0 | Same as before. |
| 15 | 870 | 45·9 | 44·6 | 1·3 | 0·1 | 0·0 | 20 | | 9·9 | Cirro-cumulo-strati; cirro-strati; cirri; hazy. ☽ |
| 16 | 879 | 43·2 | 42·9 | 0·3 | 0·0 | 0·0 | 16 | | 7·0 | Cirri; id.; haze. ☽ |
| 17 | 881 | 42·0 | 41·6 | 0·4 | 0·0 | 0·0 | 15 | — : 28 : — | 5·0 | Nearly as before. ☽ |
| 18 | 894 | 42·7 | 41·9 | †0·8 | 0·1 | 0·0 | 20 | — : 28 : — | 7·0 | Cirro-cumuli; cirro-strati; cirrous haze. ⊙ |
| 19 | 908 | 47·3 | 45·5 | 1·8 | 0·0 | 0·0 | 20 | — : 29 : — | 7·0 | Cirro-cumulo-strati; hazy on horizon. ⊙ |
| 20 | 920 | 50·6 | 47·7 | 2·9 | 0·0 | 0·0 | 16 v. | — : 29 : — | 4·0 | Woolly cirro-cumuli; cirro-cumulo-strati. ◐ |
| 21 | 918 | 52·8 | 49·0 | ↓3·8 | 0·0 | 0·1 | 18 | — : 29 : — | 0·8 | As at last hour; sky milky. ⊙ |
| 22 | 920 | 54·1 | 49·4 | 4·7 | 0·1 | 0·1 | 28 | | 0·5 | Cirro-cumulo-strati; scud on E. horizon. ⊙ |
| 23 | 916 | 56·0 | 50·9 | 5·1 | 0·1 | 0·1 | 30 v. | | 0·2 | Cirri; id. ⊙ |

The direction of the wind is indicated by the number of the point of the compass, reckoning N. = 0, E. = 8, S. = 16, W. = 24. The motions of the three strata of clouds, Sc. (scud), C.-s. (cirro-stratus), and Cir. (cirrus), are indicated in a similar manner.

Aug. 27d 7h. Bands of woven cirri stretching from WNW. 8h. A small corona about 6′ broad round the Moon, produced by haze.

| Gött. Mean Time. | | Barometer at 32°. | Thermometers. Dry. | Wet. | Diff. | Wind. Maximum force in 1h. | 10m. | From | Clouds, Sc. : C.-s. : Ci., moving from | Sky clouded. | Species of Clouds and Meteorological Remarks. |
|---|---|---|---|---|---|---|---|---|---|---|---|
| d. | h. | in. | ° | ° | ° | lbs. | lbs. | pt. | pt. pt. pt. | 0—10. | |
| 28 | 0 | 29·913 | 58·4 | 51·3 | 7·1 | 0·1 | 0·1 | 28 v. | | 0·2 | Cirrous haze; scud on E. horizon. ☉ |
| | 1 | 909 | 60·3 | 51·6 | 8·7 | 0·1 | 0·0 | var. | | 0·2 | Id.; id. ☉ |
| | 2 | 904 | 62·2 | 53·2 | 9·0 | 0·1 | 0·1 | var. | | 0·5 | Linear cirri; cirrous haze; cirro-stratous scud to SE. ☉ |
| | 3 | 902 | 63·3 | 53·1 | 10·2 | 0·1 | 0·0 | 2 v. | —:—: 0 | 0·8 | Cirri; id.; id. ☉ |
| | 4 | 899 | 65·8 | 57·1 | 8·7 | 0·1 | 0·1 | 14 | —:—: 2 | 0·5 | As before. ☉ |
| | 5 | 890 | 65·3 | 55·7 | †9·6 | 0·1 | 0·0 | 14 | | 0·5 | Id. ☉ |
| | 6 | 886 | 64·9 | 55·5 | 9·4 | 0·1 | 0·1 | 15 | —:—: 0 | 0·8 | Woolly cirri; cirro-cumulo-strati. ☉ |
| | 7 | 900 | 59·2 | 55·1 | 4·1 | 0·3 | 0·3 | 2 | —:—: 0 | 2·0 | Id.; id. ☉ |
| | 8 | 905 | 55·2 | 52·4 | ↓2·8 | 0·2 | 0·1 | 4 | | 1·0 | Id. ☽ |
| | 9 | 911 | 53·0 | 51·2 | 1·8 | 0·1 | 0·0 | 4 | | 0·5 | Id. ☽ |
| | 10 | 922 | 49·0 | 48·2 | 0·8 | 0·1 | 0·0 | 17 | | 0·2 | Haze on horizon. ☽ |
| | 11 | 922 | 46·4 | 45·3? | 1·1 | 0·1 | 0·0 | | | 0·0 | Clear; dewy. ☽ |
| | 12 | 930 | 44·6 | 44·3 | 0·3 | 0·1 | 0·0 | | | 0·0 | Id. ☽ |
| | 13 | 29·928 | 45·4 | 44·8 | 0·6 | 0·0 | 0·0 | | | 0·0 | Clear; a little mist. ☽ |
| | 14 | 921 | 42·9 | 42·7 | 0·2 | 0·0 | 0·0 | | | 0·0 | Misty. ☽ |
| | 15 | 919 | 42·2 | 42·2 | 0·0 | 0·0 | 0·0 | | | 0·0 | Very misty. ☽ |
| | 16 | 912 | 41·4 | 41·4 | 0·0 | 0·0 | 0·0 | | | 0·0 | Id. ☽ |
| | 17 | 915 | 40·2 | 40·1 | 0·1 | 0·0 | 0·0 | | | 0·5 | Id.; thick haze on E. horizon. ☽ |
| | 18 | 923 | 38·8 | 38·8 | 0·0 | 0·0 | 0·0 | | | 0·2 | Id. ☽ ◐ |
| | 19 | 930 | 42·5 | 42·0 | †0·5 | 0·0 | 0·0 | | | 1·0 | Mist, objects invisible at 1 mile. ◐ |
| | 20 | 933 | 45·0 | 44·8 | 0·2 | 0·0 | 0·0 | 20 | 24:—:— | 2·0 | Mist clearing off; cirrous scud. ☉ |
| | 21 | 929 | 50·2 | 49·2 | ↓1·0 | 0·1 | 0·0 | 25 | | 0·0 | Hazy to E. ☉ |
| | 22 | 923 | 54·8 | 52·5 | 2·3 | 0·1 | 0·0 | 26 | | 0·0 | Id. ☉ |
| | 23 | 916 | 60·7 | 56·0 | 4·7 | 0·0 | 0·0 | 6 | | 0·0 | Id. ☉ |
| 29 | 0 | 908 | 66·0 | 58·2 | 7·8 | 0·2 | 0·2 | 10 | | 0·0 | Id. ☉ |
| | 1 | 895 | 68·7 | 60·0 | 8·7 | 0·3 | 0·2 | 14 | | 0·0 | Id. ☉ |
| | 2 | 890 | 70·0 | 60·4 | 9·6 | 0·3 | 0·2 | 15 | 15:—:— | 0·1 | Patches of scud; haze to E. ☉ |
| | 3 | 881 | 70·9 | 60·0 | 10·9 | 0·4 | 0·4 | 14 | | 0·0 | Hazy on horizon. ☉ |
| | 4 | 879 | 71·0 | 60·3 | 10·7 | 0·4 | 0·3 | 15 | 16:—:— | 0·1 | Patches of scud; hazy. ☉ |
| | 5 | 872 | 70·2 | 60·6 | 9·6 | 0·4 | 0·3 | 14 | 16:—:— | 0·1 | Id.; id. ☉ |
| | 6 | 857 | 67·9 | 58·8 | †9·1 | 0·7 | 0·3 | 14 | | 0·0 | Hazy on horizon. ☉ |
| | 7 | 861 | 64·0 | 57·4 | 6·6 | 0·3 | 0·3 | 15 | | 0·5 | Cirri amongst haze to E. ☉ |
| | 8 | 881 | 57·4 | 54·5 | ↓2·9 | 0·3 | 0·0 | 27 | | 0·2 | Id. ☽ |
| | 9 | 883 | 56·2 | 54·3 | 1·9 | 0·1 | 0·0 | 20 | | 0·2 | Cirri; cirro-cumulo-strati to NW. ☽ |
| | 10 | 887 | 54·2 | 52·0 | 2·2 | 0·2 | 0·1 | 18 | | 0·0 | Hazy on horizon. ☽ |
| | 11 | 893 | 51·3 | 50·9 | 0·4 | 0·1 | 0·0 | 15 | | 0·0 | Id. ☽ |
| | 12 | 892 | 49·0 | 48·4 | 0·6 | 0·1 | 0·0 | 20 | | 0·1 | Woolly cirri to NW. ☽ |
| | 13 | 29·892 | 46·8 | 46·0 | 0·8 | 0·0 | 0·0 | 22 | —:30:— | 0·8 | Woolly cir.-cum. and cir. to W.; mist on ground. ☽ |
| | 14 | 891 | 45·0 | 44·2 | 0·8 | 0·1 | 0·0 | 20 | —:30:30 | 1·5 | Sheets of cirri and cirro-cumuli. ☽ |
| | 15 | 886 | 46·2 | 45·2 | 1·0 | 0·1 | 0·1 | 20 | —:30:— | 5·5 | Sheet of fine cirro-cumuli. ☽ |
| | 16 | 879 | 44·9 | 44·2 | 0·7 | 0·0 | 0·0 | 20 | —:30:— | 6·8 | Id. ☽ |
| | 17 | 885 | 43·7 | 43·0 | 0·7 | 0·0 | 0·0 | 20 | —:29:— | 8·2 | Id.; mist or stratus. ☽ |
| | 18 | 894 | 43·0 | 42·1 | †0·9 | 0·0 | 0·0 | 20 | —:30:— | 8·5 | Cirro-cumuli; fine cirri; mist, haze. ☽ ◐ |
| | 19 | 907 | 45·2 | 44·8 | 0·4 | 0·0 | 0·0 | 22 | —: 1:— | 7·5 | Id.; id.; id. ☽ ◐ |
| | 20 | 913 | 48·0 | 47·0 | 1·0 | 0·1 | 0·1 | 21 | | 4·0 | Id.; mist, haze. ◐ |
| | 21 | 914 | 53·7 | 52·0 | ↓1·7 | 0·1 | 0·0 | 18 | —:29:— | 7·5 | Id.; id. ◐ |
| | 22 | 915 | 61·0 | 56·6 | 4·4 | 0·1 | 0·0 | 17 | —:29:— | 7·0 | Id.; id. ☉ |
| | 23 | 913 | 64·1 | 58·6 | 5·5 | 0·0 | 0·1 | 31 | —:28:— | 8·0 | Id.; haze on horizon. ◐ |
| 30 | 0 | 907 | 67·5 | 60·4 | 7·1 | 0·0 | 0·0 | 20 | —:28:— | 6·5 | Cirro-cumulo-strati; hazy to E. ◐ |
| | 1 | 905 | 69·0 | 61·9 | 7·1 | 0·1 | 0·0 | 20 | —:27:— | 4·5 | Id.; id. ◐ |
| | 2 | 902 | 71·3 | 61·9 | 9·4 | 0·3 | 0·2 | 18 | | 4·5 | Mottled cirri; cirro-cumuli; cirro-cumulo-strati. ◐ |
| | 3 | 900 | 71·6 | 61·3 | 10·3 | 0·3 | 0·2 | 21 | 19:—:— | 4·5 | Patches of scud; mottled cirri; cirro-cumulo-strati. ☉ |
| | 4 | 900 | 71·4 | 61·4 | 10·0 | 0·3 | 0·3 | 20 | —:26:26 | 6·0 | Woolly and mottled cirro-cumuli; cymoid cirri; haze. ◐ |
| | 5 | 902 | 71·3 | 61·6 | †9·7 | 0·3 | 0·3 | 22 | —:26:— | 2·8 | Id.; cumulo-strati. ☉ |
| | 6 | 900 | 67·9 | 60·1 | 7·8 | 0·3 | 0·2 | 21 | —:26:— | 6·2 | Id.; id. ◐ |
| | 7 | 911 | 65·3 | 60·0 | ↓5·3 | 0·1 | 0·0 | 21 | —:26:— | 3·5 | Id.; id. ☉ |

The direction of the wind is indicated by the number of the point of the compass, reckoning N. = 0, E. = 8, S. = 16, W. = 24. The motions of the three strata of clouds, Sc. (scud), C.-s. (cirro-stratus), and Cir. (cirrus), are indicated in a similar manner.

| Gött. Mean Time. | Barometer at 32°. | Thermometers. Dry. | Wet. | Diff. | Wind. Maximum force in 1h. | 10m. | From | Clouds, Sc. : C.-s. : Ci., moving from | Sky clouded. | Species of Clouds and Meteorological Remarks. |
|---|---|---|---|---|---|---|---|---|---|---|
| d. h. | in. | | ° | ° | lbs. | lbs. | pt. | pt. pt. pt. | 0—10. | |
| 30 8 | 29·923 | 61·3 | 57·9 | 3·4 | 0·1 | 0·0 | 23 | — : 26 : — | 6·5 | Woolly or mottled cirro-cumuli; cumulo-strati. |
| 9 | 937 | 60·3 | 56·8 | 3·5 | 0·1 | 0·1 | 20 | | 7·0 | Id., with a bay to the W. |
| 10 | 957 | 56·3 | 54·3 | 2·0 | 0·1 | 0·0 | 18 | | 6·0 | Id.; haze on horizon. ☽ |
| 11 | 968 | 55·1 | 53·7 | 1·4 | 0·1 | 0·0 | 20 | — : 26 : — | 8·5 | Id. ☂ |
| 12 | 976 | 52·9 | 51·9 | 1·0 | 0·1 | 0·0 | 18 | — : 26 : — | 9·0 | Woolly cirro-cumuli; cirro-strati. ☽ |
| 13 | 29·987 | 52·4 | 51·3 | 1·1 | 0·1 | 0·0 | 16 | — : 26 : — | 9·8 | Woolly cirro-cumuli; cirro-strati. ☽ |
| 14 | 987 | 52·2 | 51·1 | 1·1 | 0·0 | 0·0 | 16 | — : 26 : — | 9·0 | Id.; id. ☂ |
| 15 | 992 | 49·9 | 48·7 | 1·2 | 0·1 | 0·0 | 16 | | 8·0 | Id.; id. ☂ |
| 16 | 29·996 | 51·7 | 50·7 | 1·0 | 0·0 | 0·0 | 16 | | 8·5 | Id.; id. ☂ |
| 17 | 30·003 | 52·1 | 51·0 | 1·1 | 0·0 | 0·0 | 17 | | 10·0 | Id.; red from E. to zenith. |
| 18 | 012 | 52·6 | 51·3 | 1·3 | 0·1 | 0·1 | 23 | 28 : — : — | 10·0 | Scud. ⊖ |
| 19 | 022 | 53·0 | 52·0 | 1·0 | 0·1 | 0·1 | 17 | 24 : — : — | 10·0 | Id.; woolly and other cirri; thick haze to E. |
| 20 | 041 | 55·8 | 53·9 | 1·9 | 0·1 | 0·1 | 23 | — : 24 : — | 9·5 | Cirro-stratous scud; cirri as before; cirro-strati. ⊖ |
| 21 | 055 | 59·3 | 56·8 | 2·5 | 0·1 | 0·0 | 20 | — : 25 : — | 5·0 | Cirro-cumuli; pure cirri. ◐ |
| 22 | 062 | 67·0 | 62·1 | 4·9 | 0·2 | 0·3 | 17 | — : — : 26 | 6·5 | Woolly and pure cirri. ◐ |
| 23 | 060 | 70·9 | 64·2 | 6·7 | 0·4 | 0·4 | 18 | — : — : 24 | 8·2 | Id. dispersed on sky; cir.-cum. ◐ |
| 31 0 | 062 | 70·7 | 63·2 | 7·5 | 0·5 | 0·3 | 17 | — : 24 : 24 | 7·0 | Cirri; cir.-str.; cir.-cum.; patches of scud; haze. ◐ |
| 1 | 058 | 69·8 | 61·2 | 8·6 | 0·3 | 0·1 | 17 | — : 25 : — | 6·0 | Id.; cumuli and haze. ◐ |
| 2 | 053 | 70·7 | 62·2 | 8·5 | 0·6 | 0·2 | 22 | — : 25 : 25 | 7·0 | Id.; small cumuli. ⊖ |
| 3 | 057 | 71·6 | 62·8 | 8·8 | 0·5 | 0·2 | 20 | — : 24 : 24 | 5·0 | Id.; cirro-cumuli; small cum.-str.; loose cum. ⊖ |
| 4 | 059 | 71·3 | 63·8 | 7·5 | 0·5 | 0·3 | 20 | — : 24 : 24 | 6·0 | Id. ⊖ |
| 5 | 064 | 70·8 | 62·9 | 7·9 | 0·4 | 0·2 | 20 | | 7·0 | Id.; cirro-cumuli; cirrous cones; cumuli. ⊖ |
| 6 | 068 | 67·9 | 60·0 | 7·9 | 0·5 | 0·0 | 17 | — : 26 : 26 | 7·0 | As before. ⊖ |
| 7 | 065 | 66·3 | 60·7 | 5·6 | 0·1 | 0·0 | | | 7·0 | Woolly and mottled cirri; cirro-strati. ⊖ |
| 8 | 069 | 61·1 | 57·6 | 3·5 | 0·1 | 0·0 | 24 | — : 24 : 24 | 4·0 | Cirri; cirro-cumuli; id. |
| 9 | 078 | 57·8 | 54·9 | 2·9 | 0·0 | 0·0 | 20 | — : 24 : 24 | 9·0 | As before. |
| 10 | 083 | 57·0 | 54·2 | 2·8 | 0·0 | 0·0 | 22 | — : 24 : 24 | 9·5 | Id. ☽ |
| 11 | 081 | 55·1 | 53·7 | 1·4 | 0·1 | 0·1 | 16 | | 1·0 | Fine cirri. ☽ |
| 12 | 089 | 52·8 | 51·9 | 0·9 | 0·1 | 0·1 | 18 | — : 26 : — | 0·5 | Loose cirro-cumuli. ☽ |
| 22 | 30·110 | 65·7 | 60·8 | 4·9 | 0·1 | ... | | | ..... | Sunday—Nearly cloudless; a few cirri. |
| 1 13 | 30·123 | 50·0 | 48·8 | 1·2 | 1·0 | 0·0 | 20 | | 0·0 | Hazy on horizon. ☽ |
| 14 | 119 | 48·1 | 47·3 | 0·8 | 0·1 | 0·1 | 22 | | 0·0 | Id. ☽ |
| 15 | 123 | 46·5 | 45·5 | 1·0 | 0·0 | 0·0 | 20 | | 0·0 | Id. ☽ |
| 16 | 125 | 47·2 | 46·3 | 0·9 | 0·1 | 0·1 | 18 | | 0·0 | Id. ☽ |
| 17 | 115 | 45·4 | 43·9 | 1·5 | 0·1 | 0·1 | 18 | | 0·2 | Cirri, tinged red to E. ☽ |
| 18 | 118 | 45·2 | 44·7 | †0·5 | 0·1 | 0·1 | 18 | | 0·3 | Id. ◐ ☽ |
| 19 | 120 | 47·8 | 46·9 | 0·9 | 0·0 | 0·0 | 20 | | 0·2 | Cirri to E. ⊙ ☽ |
| 20 | 123 | 51·4 | 49·2 | ↓2·2 | 0·0 | 0·0 | 20 | | 0·2 | Id. ⊙ ☽ |
| 21 | 124 | 57·3 | 53·9 | 3·4 | 0·1 | 0·1 | 24 v. | | 0·8 | Id. ⊙ ☽ |
| 22 | 125 | 62·0 | 57·5 | 4·5 | 0·1 | 0·1 | 23 | | 0·2 | Id. ⊙ ☽ |
| 23 | 118 | 67·3 | 61·7 | 5·6 | 0·0 | 0·0 | 16 | | 0·3 | Id. ⊙ |
| 2 0 | 106 | 72·0 | 61·9 | 10·1 | 0·2 | 0·0 | 14 | | 0·3 | Cirri; cirrous haze on E. horizon. ⊙ |
| 1 | 096 | 74·4 | 59·7 | 14·7 | 0·0 | 0·0 | 4 | | 0·5 | Id.; id. ⊙ |
| 2 | 087 | 75·7 | 62·1 | 13·6 | 0·1 | 0·2 | 8 | | 0·5 | Id.; id. ⊙ |
| 3 | 079 | 77·0 | 65·7 | 11·3 | 0·3 | 0·2 | 6 | | 0·4 | Id.; id. ⊙ |
| 4 | 072 | 75·0 | 65·0 | 10·0 | 0·3 | 0·3 | 4 | | 0·4 | Id.; id. ⊙ |
| 5 | 061 | 72·8 | 64·7 | 8·1 | 0·4 | 0·3 | 4 | | 0·6 | Id.; id. ⊙ |
| 6 | 061 | 69·3 | 63·3 | †6·0 | 0·3 | 0·2 | 2 | | 0·8 | Id.; id. ⊙ |
| 7 | 061 | 65·2 | 61·2 | ↓4·0 | 0·2 | 0·1 | 18 | — : — : 16 | 2·0 | Id.; id. |
| 8 | 069 | 61·4 | 58·9 | 2·5 | 0·1 | 0·1 | 2 | | 1·0 | Id.; id. |
| 9 | 077 | 56·9 | 55·7 | 1·2 | 0·1 | 0·0 | 18 | | 1·0 | Id.; id.; mist on the ground. ☂ |
| 10 | 076 | 53·5 | 53·0 | 0·5 | 0·1 | 0·0 | 18 | | 0·5 | Id.; id.; id. ☂ |
| 11 | 078 | 52·0 | 51·7 | 0·3 | 0·0 | 0·0 | 20 | | 0·2 | Id.; mist on the ground. ☽ |
| 12 | 086 | 50·2 | 49·7 | 0·5 | 0·0 | 0·0 | 20 | | 0·2 | Id.; id. ☽ |
| 13 | 30·085 | 48·7 | 48·3 | 0·4 | 0·0 | 0·0 | 20 | | 0·2 | Cirri; mist becoming thicker. ☽ |

The direction of the wind is indicated by the number of the point of the compass, reckoning N. = 0, E. = 8, S. = 16, W. = 24. The motions of the three strata of clouds, Sc. (scud), C.-s. (cirro-stratus), and Cir. (cirrus), are indicated in a similar manner.

Sept. 1d 19h. Observation made at 19h 8m.

| Gött. Mean Time. | Barometer at 32°. | Thermometers. Dry. | Wet. | Diff. | Wind. Maximum force in 1h. | 10m. | From | Clouds, Sc. : C.-s. : Ci., moving from | Sky clouded. | Species of Clouds and Meteorological Remarks. |
|---|---|---|---|---|---|---|---|---|---|---|
| d. h. | in. | ° | ° | ° | lbs. | lbs. | pt. | pt. pt. pt. | 0—10. | |
| 2 14 | 30·084 | 46·7 | 46·3 | 0·4 | 0·0 | 0·0 | 20 | | 0·2 | Cirri; mist becoming thicker. ☽ |
| 15 | 075 | 46·8 | 46·6 | 0·2 | 0·0 | 0·0 | 20 | | 10·0 | Thick fog; lunar corona. ☽ |
| 16 | 062 | 44·2 | 44·0 | 0·2 | 0·0 | 0·0 | | | 10·0 | Id.; id. ☽ |
| 17 | 053 | 45·7 | 45·6 | 0·1 | 0·0 | 0·0 | | | 10·0 | Id.; id. ☽ |
| 18 | 054 | 47·3 | 47·1 | 0·2 | 0·0 | 0·0 | 18 | | 10·0 | Fog, objects invisible at 100 yards. |
| 19 | 059 | 50·0 | 49·9 | 0·1 | 0·0 | 0·0 | 5 | | 10·0 | Id., id. |
| 20 | 067 | 51·8 | 51·7 | 0·1 | 0·0 | 0·0 | 6 | | 10·0 | Id., id. at 200 yards. |
| 21 | 075 | 54·3 | 53·6 | 0·7 | 0·0 | 0·0 | 8 | | 10·0 | Fog, objects invisible at 300 yards; loose scud above. |
| 22 | 082 | 54·7 | 53·8 | 0·9 | 0·3 | 0·1 | 2 | | 10·0 | Id. 1 mile; id. |
| 23 | 079 | 61·0 | 58·2 | 2·8 | 0·1 | 0·1 | 28 | 10 : — : — | 8·0 | Loose cumuli; haze on E. horizon. ⊖ |
| 3 0 | 070 | 63·2 | 59·7 | 3·5 | 0·2 | 0·2 | 4 | | 2·0 | Cumuli; haze on horizon. ⊙ |
| 1 | 066 | 65·7 | 59·7 | 6·0 | 0·6 | 0·6 | 2 | 11 : — : — | 2·0 | Id.; id. ⊙ |
| 2 | 068 | 66·8 | 60·8 | 6·0 | 0·9 | 0·6 | 2 | 11 : — : — | 2·0 | Id.; cumuli; haze on horizon. ⊙ |
| 3 | 059 | 62·8 | 59·1 | 3·7 | 0·9 | 0·9 | 6 | 12 : — : — | 3·0 | Loose cumuli; scud, cumuli, haze on horizon. ⊙ |
| 4 | 055 | 60·7 | 57·7 | 3·0 | 1·1 | 0·7 | 4 | 7 : 8 : 12 | 1·5 | Scud; hazy to E. ⊙ |
| 5 | 054 | 61·0 | 56·5 | 4·5 | 0·9 | 0·5 | 4 | | 0·5 | Id.; haze on E. horizon. ⊙ |
| 6 | 061 | 60·1 | 55·9 | †4·2 | 0·5 | 0·4 | 8 | 10 : — : — | 0·8 | Id. ⊙ |
| 7 | 059 | 57·2 | 54·5 | 2·7 | 1·2 | 0·6 | 5 | | 0·6 | Id. ⊙ |
| 8 | 080 | 54·3 | 53·0 | ↓1·3 | 0·6 | 0·3 | 5 | 8 : — : — | 4·0 | Scud passing rapidly, very dense to N. |
| 9 | 084 | 52·9 | 52·0 | 0·9 | 0·5 | 0·1 | 1 | | 1·0 | Scud on horizon. |
| 10 | 083 | 54·3 | 53·6 | 0·7 | 0·2 | 0·2 | 4 | | 10·0 | Scud. |
| 11 | 090 | 53·8 | 53·3 | 0·5 | 0·5 | 0·1 | 6 | | 10·0 | Loose scud. |
| 12 | 082 | 54·3 | 53·6 | 0·7 | 0·3 | 0·2 | 6 | 6 : — : — | 9·0 | Id. ☽ |
| 13 | 30·073 | 54·2 | 53·4 | 0·8 | 0·3 | 0·2 | 6 | 6 : — : — | 8·0 | Loose scud. ☽ |
| 14 | 062 | 54·6 | 53·7 | 0·9 | 0·3 | 0·2 | 6 | 6 : — : — | 9·9 | Id. ☽ |
| 15 | 058 | 55·6 | 54·6 | 1·0 | 0·6 | 0·3 | 4 | — : 10 : — | 8·0 | Cirro-cumulous scud. ☽ |
| 16 | 051 | 55·7 | 54·6 | 1·1 | 0·4 | 0·1 | 4 | | 10·0 | Scud; cirro-cumulous scud. |
| 17 | 047 | 55·7 | 54·7 | 1·0 | 0·4 | 0·3 | 6 | | 10·0 | Nearly homogeneous. |
| 18 | 051 | 55·7 | 54·7 | 1·0 | 0·3 | 0·3 | 6 | | 10·0 | Id. |
| 19 | 058 | 55·7 | 54·7 | 1·0 | 0·4 | 0·2 | 4 | | 10·0 | Id. |
| 20 | 070 | 56·4 | 55·0 | 1·4 | 0·4 | 0·2 | 3 | 6 : — : — | 10·0 | Scud. |
| 21 | 073 | 58·0 | 56·0 | 2·0 | 0·3 | 0·3 | 4 | 6 : — : — | 6·5 | Stratous scud; loose cirro-cumuli. ⊖ |
| 22 | 065 | 61·2 | 57·8 | 3·4 | 0·6 | 0·9 | 6 | 6 : — : — | 1·5 | Id. ⊙ |
| 23 | 061 | 63·2 | 59·2 | 4·0 | 0·6 | 0·4 | 5 | | 0·2 | Patches of scud; hazy on horizon. ⊙ |
| 4 0 | 058 | 65·1 | 60·2 | 4·9 | 0·7 | 0·7 | 6 | 8 : — : — | 0·2 | Id.; id. ⊙ |
| 1 | 051 | 65·5 | 60·4 | 5·1 | 0·8 | 0·6 | 5 | | 0·2 | Id.; id. ⊙ |
| 2 | 042 | 65·5 | 59·8 | 5·7 | 1·5 | 0·6 | 6 | 8 : — : — | 0·5 | Loose cumuli; cumuli; haze on horizon. ⊙ |
| 3 | 030 | 65·7 | 59·7 | 6·0 | 1·2 | 0·7 | 5 | | 0·1 | Patches of scud; haze on E. horizon. ⊙ |
| 4 | 018 | 64·3 | 58·3 | 6·0 | 1·2 | 0·6 | 5 | | 0·1 | Id.; haze; cirri to S. ⊙ |
| 5 | 013 | 63·0 | 57·5 | 5·5 | 1·2 | 0·8 | 6 | | 0·1 | Cirro-strati; haze on E. and S. horizon. ⊙ |
| 6 | 005 | 60·3 | 55·4 | †4·9 | 0·9 | 0·6 | 4 | | 0·4 | Cirro-strati and loose cumuli on S. and E. horizon. ⊙ |
| 7 | 006 | 58·9 | 55·0 | ↓3·9 | 0·7 | 0·4 | 4 | — : 7 : — | 9·2 | Cirro-stratous scud. |
| 8 | 011 | 57·8 | 55·0 | 2·8 | 0·5 | 0·3 | 3 | 7 : — : — | 9·9 | Thick scud; sky to N. |
| 9 | 021 | 57·2 | 55·1 | 2·1 | 0·3 | 0·3 | 2 | | 10·0 | Densely clouded. |
| 10 | 017 | 56·7 | 55·0 | 1·7 | 0·4 | 0·3 | 2 | | 10·0 | Dark. |
| 11 | 015 | 56·7 | 55·0 | 1·7 | 0·3 | 0·3 | 4 | | 10·0 | Id. |
| 12 | 003 | 55·8 | 54·6 | 1·2 | 0·3 | 0·3 | 4 | | 9·9 | Scud and haze; lunar corona. ☽ |
| 13 | 30·003 | 55·6 | 54·3 | 1·3 | 0·3 | 0·2 | 4 | | 10·0 | Scud and haze. |
| 14 | 29·996 | 55·9 | 54·4 | 1·5 | 0·4 | 0·3 | 3 | | 10·0 | Id. |
| 15 | 981 | 56·3 | 54·8 | 1·5 | 0·3 | 0·2 | 3 | | 10·0 | Id. |
| 16 | 970 | 55·4 | 54·2 | 1·2 | 0·4 | 0·3 | 2 | | 10·0 | Id. |
| 17 | 957 | 55·1 | 54·0 | 1·1 | 0·3 | 0·4 | 3 | 8 : — : — | 10·0 | Misty scud. ☽ |
| 18 | 952 | 55·2 | 54·1 | 1·1 | 0·5 | 0·3 | 4 | 8 : — : — | 10·0 | Id. |
| 19 | 945 | 55·7 | 54·8 | 0·9 | 0·4 | 0·2 | 4 | 6 : — : — | 10·0 | Id. |
| 20 | 939 | 57·3 | 55·9 | 1·4 | 0·3 | 0·2 | 4 | 6 : 8 : 9 | 7·5 | Loose scud; cirro-cumulous scud; mottled cirri. ⊖ |
| 21 | 933 | 59·4 | 57·3 | 2·1 | 0·4 | 0·3 | 5 | 6 : — : 9 | 7·0 | Id.; mottled cirri. ⊖ |

The direction of the wind is indicated by the number of the point of the compass, reckoning N. = 0, E. = 8, S. = 16, W. = 24. The motions of the three strata of clouds, Sc. (scud), C.-s. (cirro-stratus), and Cir. (cirrus), are indicated in a similar manner.

Sept. 4d 0h. Observation made at 0h 6m.

Sept. 4d 3½h. New floss silk put on wet-bulb thermometer: projecting sides and top put on thermometer board for the purpose of preventing radiation on clear nights.

| Gött. Mean Time. | Barometer at 32°. | Thermometers. Dry. | Wet. | Diff. | Wind. Maximum force in 1h. | 10m. | From | Clouds, Sc. : C.-s. : Ci., moving from | Sky clouded. | Species of Clouds and Meteorological Remarks. |
|---|---|---|---|---|---|---|---|---|---|---|
| d. h. | in. | ° | ° | ° | lbs. | lbs. | pt. | pt. pt. pt. | 0—10. | |
| 4 22 | 29·918 | 62·8 | 59·6 | 3·2 | 0·5 | 0·2 | 3 | — : 8 : — | 7·0 | Cirro-cumulous scud; cirro-strati. ⊖ |
| 23 | 908 | 64·0 | 59·8 | 4·2 | 0·7 | 0·6 | 6 | 8 : — : — | 9·7 | Scud; loose cumuli; cirro-strati. |
| 5 0 | 898 | 64·9 | 60·7 | 4·2 | 0·8 | 0·5 | 4 | 8 : 8 : — | 8·0 | Id.; id.; woolly cirro-cumuli; cir.-str. ⊙ |
| 1 | 885 | 65·2 | 60·4 | 4·8 | 0·7 | 0·8 | 5 | 8 : 8 : — | 8·0 | Id.; id.; id. |
| 2 | 876 | 66·6 | 60·4 | 6·2 | 1·2 | 1·2 | 8 | 7 : — : 10 | 2·2 | Id.; sheets of mot. cirri; small cir.-cum.; cir.-str. ⊙ |
| 3 | 852 | 64·8 | 60·0 | 4·8 | 1·2 | 1·1 | 4 | 8 : — : — | 2·0 | Id.; loose cumuli; cirro-cumuli; cirro-strati. ⊙ |
| 4 | 847 | 63·5 | 59·3 | 4·2 | 1·4 | 1·3 | 5 | 7 : 10 : — | 9·0 | Id.; large cirro-cumuli; cirro-strati. ⊖ |
| 5 | 835 | 59·4 | 57·0 | 2·4 | 1·9 | 1·0 | 5 | 6 : — : — | 10·0 | Id. |
| 6 | 838 | 58·0 | 55·9 | 2·1 | 1·3 | 0·8 | 5 | 6 : — : — | 10·0 | Loose scud. |
| 7 | 839 | 56·8 | 55·7 | 1·1 | 1·0 | 0·7 | 5 | 6 : — : — | 10·0 | Id.; slight Scotch mist. |
| 8 | 846 | 56·4 | 55·8 | 0·6 | 0·5 | 0·4 | 3 | | 10·0 | Scotch mist; rain0·2 |
| 9 | 844 | 56·2 | 55·7 | 0·5 | 0·6 | 0·6 | 4 | | 10·0 | Id.; id. |
| 10 | 839 | 56·0 | 55·6 | 0·4 | 0·3 | 0·2 | 4 | | 10·0 | Id.; id. |
| 11 | 831 | 56·0 | 55·4 | 0·6 | 0·3 | 0·3 | 4 | | 10·0 | Id. |
| 12 | 824 | 56·0 | 55·5 | 0·5 | 0·3 | 0·3 | 4 | | 10·0 | Id.; rain0·2 |
| 13 | 29·808 | 56·0 | 55·5 | 0·5 | 0·4 | 0·4 | 5 | | 10·0 | Scotch mist; rain0·2 |
| 14 | 804 | 56·0 | 55·5 | 0·5 | 0·4 | 0·4 | 3 | | 10·0 | Id.; rain0·3 |
| 15 | 795 | 56·0 | 55·7 | 0·3 | 0·4 | 0·3 | 4 | | 10·0 | Scud; rain0·7 |
| 16 | 782 | 56·2 | 55·9 | 0·3 | 0·4 | 0·3 | 5 | | 10·0 | Id.; rain0·2 |
| 17 | 776 | 56·3 | 55·9 | 0·4 | 0·2 | 0·2 | 3 | | 10·0 | Id. |
| 18 | 761 | 56·6 | 55·8 | 0·8 | 0·2 | 0·2 | 4 | 10 : — : — | 10·0 | Id.; cirrous mass. |
| 19 | 763 | 56·8 | 56·3 | 0·5 | 0·3 | 0·2 | 4 | | 10·0 | Scotch mist, objects invisible 1 mile off. |
| 20 | 752 | 57·5 | 57·0 | 0·5 | 0·3 | 0·4 | 3 | 4 : — : — | 10·0 | Misty scud; Scotch mist. |
| 21 | 753 | 58·0 | 57·3 | 0·7 | 0·4 | 0·2 | 6 | | 10·0 | The same as at 19h. |
| 22 | 747 | 59·2 | 58·5 | 0·7 | 0·3 | 0·2 | 4 | 7 : — : — | 10·0 | Misty scud, very low; dense mist to N. |
| 23 | 738 | 61·5 | 59·8 | 1·7 | 0·5 | 0·3 | 4 | 8 : — : — | 9·9 | Id., cumuli, &c. to E. |
| 6 0 | 721 | 60·9 | 59·1 | 1·8 | 0·3 | 0·3 | 4 | 8 : — : — | 9·9 | Id.; cirro-strati to E. |
| 1 | 707 | 60·7 | 59·0 | 1·7 | 0·3 | 0·3 | 3 | 8 : — : — | 10·0 | Id. |
| 2 | 700 | 59·9 | 58·9 | 1·0 | 0·3 | 0·3 | 3 | 8 : — : — | 10·0 | Id.; sunshine to E. |
| 3 | 683 | 61·8 | 60·0 | 1·8 | 0·3 | 0·3 | 3 | 8 : — : — | 10·0 | Id., more broken. |
| 4 | 678 | 60·8 | 59·3 | 1·5 | 0·4 | 0·2 | 4 | 8 : — : — | 10·0 | Id. |
| 5 | 670 | 61·2 | 59·7 | 1·5 | 0·2 | 0·3 | 4 | 6 : 14 : — | 9·9 | Id.; scud, loose cumuli, cirro-strati, &c. |
| 6 | 658 | 61·4 | 59·8 | 1·6 | 0·3 | 0·2 | 3 | 6 : — : — | 10·0 | Id. |
| 7 | 658 | 59·6 | 58·8 | 0·8 | 0·2 | 0·1 | 4 | 15 : — : — | 10·0 | Scud; loose scud. |
| 8 | 653 | 58·8 | 58·2 | 0·6 | 0·1 | 0·1 | 2 | 15 : — : — | 10·0 | Id. |
| 9 | 644 | 58·0 | 57·6 | 0·4 | 0·1 | 0·1 | 4 | | 9·9 | Id.; a few stars seen dimly. |
| 10 | 647 | 58·0 | 57·7 | 0·3 | 0·1 | 0·1 | | | 10·0 | Id.; dark. |
| 11 | 647 | 57·9 | 57·6 | 0·3 | 0·0 | 0·0 | | | 10·0 | Dark; foggy. |
| 12 | 640 | 57·4 | 57·2 | 0·2 | 0·0 | 0·0 | | | 10·0 | Id.; id. |
| 13 | 29·623 | 57·3 | 57·1 | 0·2 | 0·0 | 0·0 | | | 10·0 | Dark; rain0·5 |
| 14 | 613 | 57·3 | 57·0 | 0·3 | 0·0 | 0·0 | | | 10·0 | Id. |
| 15 | 607 | 57·0 | 56·8 | 0·2 | 0·0 | 0·0 | | | 10·0 | Lighter. |
| 16 | 594 | 56·4 | 56·1 | 0·3 | 0·0 | 0·0 | 4 | 20 : 16 : — | 7·0 | Loose scud; cirro-cumulous scud; stratus. ☽ |
| 17 | 593 | 56·7 | 56·2 | 0·5 | 0·1 | 0·0 | 20 | — : 18 : — | 9·0 | Cirro-cumulous scud. ☽ |
| 18 | 597 | 56·5 | 56·0 | 0·5 | 0·0 | 0·0 | 20 | 20 : — : — | 9·7 | Loose scud; cirro-cumulous scud; cirro-strati. |
| 19 | 597 | 56·8 | 56·4 | †0·4 | 0·0 | 0·0 | 17 | 19 : 20 : — | 9·0 | Id.; id. ● |
| 20 | 606 | 58·8 | 57·8 | 1·0 | 0·0 | 0·0 | 20 | 19 : — : — | 9·5 | Id.; id. |
| 21 | 615 | 62·6 | 59·7 | ‡2·9 | 0·3 | 0·2 | 20 | 21 : 23 : — | 9·0 | Misty scud; cumuli; cir-cum.; mottled cirri; cir.-str. |
| 22 | 611 | 65·0 | 61·2 | 3·8 | 0·4 | 0·4 | 20 | 21 : 20 : — | 9·0 | Id.; id. |
| 23 | 606 | 66·0 | 62·6 | 3·4 | 0·3 | 0·2 | 20 | 23 : 21 : — | 9·2 | Scud; cumuli; cir.-cum.-str.; cir.-str.; cum.-str. |
| 7 0 | 608 | 66·7 | 62·2 | 4·5 | 0·4 | 0·3 | 20 | 23 : 21 : — | 9·0 | As last hour. ● |
| 1 | 601 | 67·7 | 62·0 | 5·7 | 0·3 | 0·4 | 21 | — : 22 : — | 8·5 | Cirro-cumulo-strati; cumuli; cumulo-strati; cir.-str. ⊖ |
| 2 | 601 | 67·3 | 62·3 | 5·0 | 0·2 | 0·2 | 19 | — : 21 : — | 9·9 | Id.; piles of cumulo-strati; id. |
| 3 | 588 | 65·9 | 62·0 | 3·9 | 0·2 | 0·1 | 19 | — : 21 : — | 10·0 | As last hour. |
| 4 | 576 | 67·8 | 63·0 | 4·8 | 0·1 | 0·0 | 18 | — : 20 : — | 10·0 | Id.; drops of rain. |
| 5 | 576 | 66·2 | 62·1 | 4·1 | 0·1 | 0·1 | 17 | — : 20 : — | 9·7 | Id. |

The direction of the wind is indicated by the number of the point of the compass, reckoning N. = 0, E. = 8, S. = 16, W. = 24. The motions of the three strata of clouds, Sc. (scud), C.-s. (cirro-stratus), and Cir. (cirrus), are indicated in a similar manner.

| Gött. Mean Time. | Barometer at 32°. | Thermometers. Dry. | Wet. | Diff. | Wind. Maximum force in 1h. | 10m. | From | Clouds, Sc. : C.-s. : Ci., moving from | Sky clouded. | Species of Clouds and Meteorological Remarks. |
|---|---|---|---|---|---|---|---|---|---|---|
| d. h. | in. | ° | ° | ° | lbs. | lbs. | pt. | pt. pt. pt. | 0—10. | |
| 7 6 | 29·565 | 65·2 | 62·1 | 3·1 | 0·1 | 0·0 | | 20 : 20 : — | 9·9 | Scud; cir.-cum.-str.; piles of cumuli to SE.; drops of |
| 7 | 565 | 63·0 | 61·2 | 1·8 | 0·1 | 0·0 | 8 | 16 : — : — | 9·8 | Id.; cumuli; cirro-strati. [rain; electric looking. |
| 8 | 572 | 61·7 | 60·2 | 1·5 | 0·1 | 0·0 | | 17 : — : — | 10·0 | Id.; rain[4]; thunder storm since 7h 15m. |
| 9 | 570 | 59·5 | 59·0 | 0·5 | 0·4 | 0·1 | 12 | 16 : — : — | 9·5 | Id.; sky in zenith; distant thunder; rain[0·5] |
| 10 | 582 | 57·7 | 56·5 | 1·2 | 0·9 | 0·9 | 5 | | 10·0 | Dark; occasional lightning; rain[0·3] |
| 11 | 609 | 54·4 | 54·0 | 0·4 | 0·7 | 0·4 | 3 | | 10·0 | Very dark; rain[0·5] |
| 12 | 611 | 54·1 | 53·7 | 0·4 | 0·4 | 0·6 | 3 | | 10·0 | Id. |
| 23 | 29·679 | 54·0 | 50·9 | 3·1 | 0·8 | 0·4 | 5 | 14 : — : — | 10·0 | Sunday—Overcast; homogeneous scud. |
| 8 13 | ..... | ... | ... | ... | ... | ... | | | ..... | |
| 14 | ..... | ... | ... | ... | ... | ... | | | ..... | |
| 15 | ..... | ... | ... | ... | ... | ... | | | ..... | |
| 16 | 29·568 | 52·2 | 51·8 | 0·4 | 0·4 | 0·0 | | | 10·0 | Homogeneous scud? rain[0·2] |
| 17 | 561 | 52·1 | 51·7 | 0·4 | 0·0 | 0·0 | 28 | | 10·0 | Id. |
| 18 | 562 | 52·4 | 51·9 | 0·5 | 0·0 | 0·0 | 27 | 28 : 22 : — | 9·8 | Misty scud; cirro-stratous scud; cirro-strati; cirri. |
| 19 | 566 | 51·8 | 49·6 | 2·2 | 0·2 | 0·1 | 20 | 20 : 0 : — | 7·0 | Id.; id.; woolly and linear cirri. |
| 20 | 558 | 51·4 | 50·0 | 1·4 | 0·0 | 0·0 | 22 | 20 : — : — | 6·0 | Id.; id.; id. ⊖ |
| 21 | 561 | 54·0 | 51·3 | 2·7 | 0·2 | 0·2 | 25 | 22 : — : — | 7·0 | Loose scud; fine linear cirri. ⊙ |
| 22 | 556 | 55·8 | 52·3 | 3·5 | 0·1 | 0·1 | 25 | 20 : — : — | 7·5 | Id. ⊖ |
| 23 | 540 | 57·2 | 52·9 | 4·3 | 0·3 | 0·3 | 22 | 20 : — : — | 5·0 | Id.; fine linear cirri. ⊖ |
| 9 0 | 519 | 58·3 | 53·5 | 4·8 | 0·4 | 0·4 | 22 | 20 : — : — | 2·5 | Scud; loose cumuli; woolly and linear cirri. ⊙ |
| 1 | 508 | 59·0 | 52·8 | 6·2 | 0·7 | 0·6 | 23 | | 1·0 | Id.; loose cumuli on horizon; woolly cirri. ⊙ |
| 2 | 500 | 60·2 | 52·8 | 7·4 | 0·6 | 0·4 | 28 | 21 : — : — | 1·2 | Id.; woolly cirri. ⊙ |
| 3 | 492 | 58·8 | 52·0 | 6·8 | 0·6 | 0·4 | 23 | | 0·7 | Id. ⊙ |
| 4 | 493 | 58·0 | 51·4 | 6·6 | 0·9 | 0·6 | 22 | 21 : — : — | 0·7 | Id.; loose cumuli; loose cumuli on S. horizon. ⊙ |
| 5 | 487 | 58·0 | 51·2 | 6·8 | 0·6 | 0·6 | 22 | | 0·5 | Id.; loose cumuli on S. horizon; cirro-strati. ⊙ |
| 6 | 481 | 56·6 | 51·4 | †5·2 | 0·8 | 0·4 | 24 | — : 24 : — | 6·5 | Cirro-stratous scud; mottled cirro-strati; cirri. ● |
| 7 | 489 | 54·1 | 50·0 | 4·1 | 0·3 | 0·2 | 19 | — : 25 : — | 9·0 | Id.; cirro-cumulous scud; cirri, &c. |
| 8 | 481 | 53·8 | 50·1 | ↓3·7 | 0·5 | 0·2 | 19 | — : 25 : — | 9·2 | As last hour. |
| 9 | 477 | 54·0 | 50·1 | 3·9 | 0·3 | 0·2 | 20 | | 9·5 | Id. |
| 10 | 467 | 54·3 | 50·9 | 3·4 | 0·7 | 0·4 | 20 | | 9·8 | Id. |
| 11 | 458 | 54·3 | 51·1 | 3·2 | 0·8 | 0·2 | 20 | | 9·9 | Scud; cirro-strati. |
| 12 | 456 | 53·9 | 51·1 | 2·8 | 0·6 | 0·2 | 18 | | 10·0 | Id. |
| 13 | 29·452 | 53·7 | 51·6 | 2·1 | 0·5 | 0·5 | 20 | | 10·0 | Scud. |
| 14 | 458 | 53·0 | 51·8 | 1·2 | 0·7 | 0·2 | 21 | | 7·5 | Id. |
| 15 | 456 | 51·9 | 49·9 | 2·0 | 0·4 | 0·1 | 22 | | 3·0 | Thin scud and cirro-strati. |
| 16 | 460 | 50·6 | 48·5 | 2·1 | 0·2 | 0·2 | 20 | | 2·5 | Id. ☽ |
| 17 | 467 | 47·0 | 45·7 | 1·3 | 0·3 | 0·0 | 6 | | 0·2 | Patches of cirro-cumulo-strati. ☽ |
| 18 | 474 | 45·6 | 44·6 | 1·0 | 0·0 | 0·0 | 28 | | 0·1 | Id. ☽ |
| 19 | 501 | 45·6 | 44·6 | †1·0 | 0·1 | 0·1 | 22 | | 0·2 | Id. ⊙ |
| 20 | 516 | 51·2 | 48·0 | 3·2 | 0·3 | 0·3 | 25 | — : 26 : — | 0·5 | Cirro-stratous scud; mottled, &c. cirro-strati. ⊙ |
| 21 | 526 | 53·6 | 49·2 | ↓4·4 | 0·4 | 0·4 | 22 | — : 26 : — | 1·0 | id.; mottled cirri; cirro-strati. ⊖ |
| 22 | 535 | 56·0 | 51·1 | 4·9 | 0·4 | 0·4 | 24 | — : 26 : — | 6·5 | Cir.-cum.-str.; scud; patches of scud; loose cumuli. ⊖ |
| 23 | 545 | 56·8 | 51·2 | 5·6 | 0·6 | 0·6 | 23 | 26 : — : — | 4·5 | Scud; loose cumuli; id. ⊙ |
| 10 0 | 548 | 58·3 | 51·3 | 7·0 | 0·4 | 0·4 | 26 | 28 : — : — | 8·5 | Id.; id.; range of cumuli to SE. ● |
| 1 | 559 | 58·8 | 51·1 | 7·7 | 0·5 | 0·3 | 26 | 28 : — : — | 9·0 | Id.; cumuli; cirro-strati. ● |
| 2 | 570 | 58·9 | 50·8 | 8·1 | 0·4 | 0·7 | 27 | 28 : 26 : — | 8·0 | Loose cumuli; cirrous edged cumuli moving variously. |
| 3 | 578 | 59·1 | 52·1 | 7·0 | 0·7 | 0·4 | 27 | 26 : — : — | 9·0 | Id.; scud; piles of cumulo-strati. |
| 4 | 594 | 60·2 | 53·1 | 7·1 | 0·4 | 0·3 | 26 | — : 28 : — | 7·5 | Cir.-cum.-str., with scud dripping from it; cum.-str. ⊖ |
| 5 | 608 | 58·0 | 51·4 | 6·6 | 0·3 | 0·1 | 28 | — : 26 : — | 9·0 | id.; cirro-strati; woolly cirri. |
| 6 | 620 | 57·2 | 51·7 | 5·5 | 0·2 | 0·2 | 26 | — : 26 : — | 9·2 | Cirro-cumulous scud; woolly cirro-cumuli; cirri. |
| 7 | 641 | 55·4 | 50·2 | 5·2 | 0·2 | 0·0 | 25 | — : 24 : — | 9·5 | Id.; cirro-cumulo-strati. |
| 8 | 658 | 50·7 | 48·0 | 2·7 | 0·1 | 0·0 | 22 | — : 25 : — | 8·0 | Id.; diffuse cirri; cirro-strati. |
| 9 | 675 | 50·0 | 47·4 | 2·6 | 0·1 | 0·1 | 22 | | 2·0 | Cirri and cirro-strati on horizon. |
| 10 | 688 | 48·1 | 46·1 | 2·0 | 0·1 | 0·0 | | | 1·0 | Thin clouds near horizon. |
| 11 | 702 | 46·9 | 45·1 | 1·8 | 0·1 | 0·0 | | | 1·0 | Id. on E. horizon. |
| 12 | 714 | 45·8 | 44·2 | 1·6 | 0·1 | 0·0 | | | 0·2 | Clouds on N. and E. horizon. |

The direction of the wind is indicated by the number of the point of the compass, reckoning N. = 0, E. = 8, S. = 16, W. = 24. The motions of the three strata of clouds, Sc. (scud), C.-s. (cirro-stratus), and Cir. (cirrus), are indicated in a similar manner.

Sept. 8d 16h. Observation made at 16h 6m.

Sept. 9d 17h. Observation made at 17h 20m.

| Gött. Mean Time. | Barometer at 32°. | Thermometers. Dry. | Wet. | Diff. | Wind. Maximum force in 1h. | 10m. | From | Clouds, Sc. : C.-s. : Ci., moving from | Sky clouded. | Species of Clouds and Meteorological Remarks. |
|---|---|---|---|---|---|---|---|---|---|---|
| d. h. | in. | ° | ° | ° | lbs. | lbs. | pt. | pt. pt. pt. | 0—10. | |
| 10 13 | 29·720 | 42·8 | 42·4 | 0·4 | 0·1 | 0·0 | 24 | | 0·2 | Clouds on N. and E. horizon. |
| 14 | 722 | 43·9 | 43·2 | 0·7 | 0·2 | 0·0 | | | 0·2 | Id.; band of cloud to NE. |
| 15 | 720 | 41·5 | 41·2 | 0·3 | 0·0 | 0·0 | | | 0·2 | Id.; id. |
| 16 | 719 | 42·5 | 42·1 | 0·4 | 0·1 | 0·0 | 22 | | 0·2 | Id.; |
| 17 | 720 | 42·8 | 42·3 | 0·5 | 0·1 | 0·0 | 20 | | 0·5 | Patches of scud; cirro-strati on horizon. |
| 18 | 719 | 43·2 | 42·8 | 0·4 | 0·1 | 0·1 | 20 | — : 25 : — | 4·0 | Cirro-cumulous scud; loose scud; cirro-strati. |
| 19 | 720 | 45·0 | 44·2 | †0·8 | 0·2 | 0·2 | 20 | | 2·5 | Cirri, cirro-strati, principally to W.; heavy dew. ⊙ |
| 20 | 718 | 50·0 | 48·3 | 1·7 | 0·3 | 0·2 | 18 | | 1·5 | Cirri, cirro-strati. ⊙ |
| 21 | 713 | 54·1 | 51·1 | ↓3·0 | 0·3 | 0·3 | 19 | — : — : 25 | 1·2 | Linear cirri, patches of sheet cirri, cir.-cum.-str. ◐ |
| 22 | 706 | 57·6 | 53·6 | 4·0 | 0·5 | 0·3 | 22 | | 0·5 | Cirri, cir.-str., and patches of scud near horizon. ⊙ |
| 23 | 701 | 59·4 | 54·1 | 5·3 | 0·5 | 0·5 | 22 | 23 : — : — | 2·2 | Scud; linear and curled cirri; cirro-strati to W. ⊖ |
| 11 0 | 695 | 62·3 | 56·8 | 5·5 | 0·7 | 0·5 | 22 | 23 : — : — | 9·5 | Id.; loose cumuli. |
| 1 | 687 | 58·1 | 55·1 | 3·0 | 0·7 | 0·5 | 20 | 23 : — : — | 9·5 | Id.; cirri; cirro-strati. |
| 2 | 675 | 62·8 | 56·7 | 6·1 | 0·7 | 0·6 | 22 | 23 : — : — | 9·8 | Id. |
| 3 | 665 | 61·5 | 56·3 | 5·2 | 0·7 | 0·7 | 18 | 23 : — : — | 9·6 | Id.; cirro-cumulous scud; cirri. |
| 4 | 652 | 61·8 | 57·0 | 4·8 | 1·0 | 0·7 | 20 | 23 : — : — | 9·8 | Id. |
| 5 | 646 | 61·0 | 55·1 | 5·9 | 0·9 | 0·5 | 20 | 23 : — : — | 9·7 | As before; cirri; drops of rain at 4h 30m. |
| 6 | 642 | 58·7 | 55·0 | 3·7 | 0·7 | 0·5 | 20 | 23 : — : — | 6·0 | Id. |
| 7 | 644 | 57·2 | 54·0 | 3·2 | 0·6 | 0·3 | 21 | 24 : — : — | 9·0 | Scud; cirro-cumulous scud; cirro-strati. |
| 8 | 647 | 56·5 | 53·7 | 2·8 | 0·9 | 0·5 | 21 | 24 : 24 : — | 9·2 | Id.; cirro-strati; drops of rain. |
| 9 | 651 | 54·2 | 52·2 | 2·0 | 0·8 | 0·4 | 23 | | 0·2 | Patches of cloud to S. |
| 10 | 647 | 52·8 | 51·3 | 1·5 | 0·5 | 0·3 | 20 | | 0·2 | Id. to NE. |
| 11 | 653 | 52·2 | 50·4 | 1·8 | 0·6 | 0·3 | 20 | — : 24 : — | 6·0 | Cirro-cumulous scud? |
| 12 | 656 | 52·8 | 50·9 | 1·9 | 0·2 | 0·2 | 22 | | 7·0 | Id. |
| 13 | 29·646 | 52·2 | 51·0 | 1·2 | 0·3 | 0·0 | 21 | | 5·0 | Cirro-cumulous scud? |
| 14 | 651 | 52·9 | 51·0 | 1·9 | 0·4 | 0·7 | 23 | 24 : — : — | 5·0 | Scud; passing shower[1] |
| 15 | 659 | 50·8 | 48·5 | 2·3 | 0·4 | 0·3 | 23 | | 2·0 | Scud? cirri? |
| 16 | 659 | 49·0 | 45·6 | 3·4 | 0·5 | 0·1 | | | 5·0 | Cirri. |
| 17 | 660 | 48·0 | 44·0 | 4·0 | 0·3 | 0·2 | 22 | | 7·0 | Cirri radiating from E.; cirro-strati. |
| 18 | 668 | 46·5 | 44·0 | 2·5 | 0·3 | 0·1 | 22 | 24 : 24 : 24 | 8·5 | Scud; woolly cir.-cum., cir.-str., and cirri; rain to N. |
| 19 | 682 | 46·8 | 44·3 | 2·5 | 0·3 | 0·2 | 21 | 25 : — : 26 | 6·0 | Woolly and mottled cirri; scud; cirro-strati. ◐ |
| 20 | 703 | 52·3 | 48·8 | 3·5 | 0·3 | 0·3 | 24 | 25 : — : — | 7·5 | Scud; cirri lying WNW. to ESE; cirro-strati. ⊖ |
| 21 | 706 | 53·8 | 48·7 | 5·1 | 0·8 | 0·7 | 25 | 25 : — : — | 7·5 | Id.; cirri, cirro-strati. |
| 22 | 726 | 54·7 | 49·2 | 5·5 | 0·9 | 0·5 | 23 | 25 : — : — | 6·0 | Id.; id. ⊖ |
| 23 | 735 | 56·2 | 49·8 | 6·4 | 1·3 | 0·8 | 24 | 25 : — : — | 7·5 | Id.; id. ◐ |
| 12 0 | 749 | 57·2 | 49·8 | 7·4 | 1·9 | 1·8 | 22 | 25 : — : — | 4·0 | Id.; id. ◐ |
| 1 | 744 | 58·0 | 50·9 | 7·1 | 1·4 | 1·1 | 22 | 25 : — : — | 6·5 | Id.; id. ◐ |
| 2 | 741 | 59·2 | 50·6 | 8·6 | 1·6 | 1·5 | 22 | 25 : — : 25 | 6·0 | Id.; loose cumuli; woolly and linear cirri; cir.-str. ◐ |
| 3 | 749 | 60·0 | 51·8 | 8·2 | 1·3 | 0·8 | 23 | 26 : — : 25 | 7·5 | Id.; id. ◐ |
| 4 | 766 | 58·3 | 50·6 | 7·7 | 1·6 | 0·7 | 25 | | 3·5 | Id.; cumuli; cirri; cirro-strati on horizon. ⊙ |
| 5 | 785 | 58·7 | 51·3 | 7·4 | 1·0 | 1·0 | 25 | 26 : — : 26 | 4·5 | Id.; loose cum.; mottled and woolly cirri; cir.-str. ◐ |
| 6 | 793 | 54·8 | 49·0 | †5·8 | 0·6 | 0·3 | 23 | — : 26 : — | 3·5 | Cir.-str. scud; mottled, woolly, and lin. cir.; cum.-str. ◐ |
| 7 | 810 | 51·8 | 47·8 | ↓4·0 | 0·3 | 0·2 | 23 | — : 26 : — | 3·8 | Nearly as last hour. |
| 8 | 828 | 49·9 | 46·7 | 3·2 | 0·2 | 0·2 | 23 | — : 26 : — | 3·0 | Id. |
| 9 | 844 | 47·7 | 45·7 | 2·0 | 0·2 | 0·1 | 22 | | 1·5 | Cirri, &c. |
| 10 | 842 | 47·0 | 45·0 | 2·0 | 0·2 | 0·1 | 20 | | 1·0 | Id. |
| 11 | 854 | 45·2 | 43·7 | 1·5 | 0·2 | 0·1 | 20 | | 1·0 | Cirri; cirrous haze; cirro-strati. |
| 12 | 860 | 43·4 | 42·3 | 1·1 | 0·1 | 0·0 | | | 0·2 | Cirrous haze near horizon. |
| 13 | 29·864 | 43·1 | 42·2 | 0·9 | 0·0 | 0·0 | | | 0·2 | Cirrous haze near horizon. |
| 14 | 868 | 42·3 | 41·7 | 0·6 | 0·1 | 0·0 | | | 0·7 | Cirri; cirro-strati. |
| 15 | 869 | 42·2 | 41·4 | 0·8 | 0·0 | 0·0 | | | 0·3 | Cirri and cirrous haze near horizon. |
| 16 | 870 | 41·6 | 40·9 | 0·7 | 0·0 | 0·0 | | | 6·0 | Cirri and cirrous haze over the sky. |
| 17 | 861 | 43·0 | 42·4 | 0·6 | 0·0 | 0·0 | | | 6·0 | Loose cirro-cumuli; cirri; cirro-strati. |
| 18 | 866 | 41·8 | 41·1 | 0·7 | 0·0 | 0·0 | 0 | — : 24 : — | 8·0 | Id.; cymoid and woolly cirri; cir.-str.; cir. haze; |
| 19 | 873 | 42·2 | 41·7 | 0·5 | 0·1 | 0·0 | 20 | — : 24 : — | 9·0 | Cirro-stratous scud; cir.-cum.; cir.-str.; linear cirri. |
| 20 | 879 | 46·7 | 45·4 | 1·3 | 0·0 | 0·0 | 12 | — : 24 : — | 8·5 | Nearly as before; sky in patches. ⊖ |

The direction of the wind is indicated by the number of the point of the compass, reckoning N. = 0, E. = 8, S. = 16, W. = 24. The motions of the three strata of clouds, Sc. (scud), C.-s. (cirro-stratus), and Cir. (cirrus), are indicated in a similar manner.

| Gött. Mean Time. | | Barometer at 32°. | Thermometers. Dry. | Wet. | Diff. | Wind. Maximum force in 1h. | 10m. | From | Clouds, Sc. : C.-s. : Ci., moving from | Sky clouded. | Species of Clouds and Meteorological Remarks. |
|---|---|---|---|---|---|---|---|---|---|---|---|
| d. | h. | in. | ° | ° | ° | lbs. | lbs. | pt. | pt. pt. pt. | 0—10. | |
| 12 | 21 | 29·882 | 51·4 | 49·2 | 2·2 | 0·1 | 0·1 | 24 | — : 24 : — | 9·5 | Nearly as before. |
| | 22 | 892 | 55·1 | 51·7 | 3·4 | 0·1 | 0·1 | 20 | — : 24 : — | 9·5 | Id.; patches of scud on horizon. ⊖ |
| | 23 | 879 | 56·1 | 51·2 | 4·9 | 0·1 | 0·1 | 24 | 24 : — : — | 9·2 | Scud, cum., woolly cir.-cum., cymoid cir., cir.-str., cir. ● |
| 13 | 0 | 883 | 56·7 | 51·0 | 5·7 | 0·1 | 0·1 | 23 | 24 : — : — | 8·8 | Nearly as before. ⊖ |
| | 1 | 879 | 59·1 | 53·0 | 6·1 | 0·1 | 0·1 | 4 | 23 : — : — | 9·0 | Thick smoky scud; cumuli, cirro-strati, cirri. |
| | 2 | 874 | 60·8 | 54·1 | 6·7 | 0·1 | 0·0 | 12 | 23 : 24 : 24 | 9·8 | Scud, cumuli, cumulo-strati, cirro-strati, cirrous haze. ● |
| | 3 | 861 | 62·0 | 53·8 | 8·2 | 0·2 | 0·1 | 20 | 15 : 24 : — | 9·5 | Nearly as last; solar halo. ⊖ |
| | 4 | 859 | 60·4 | 53·0 | 7·4 | 0·2 | 0·0 | 2 | | 10·0 | Haze much thicker. |
| | 5 | 848 | 56·8 | 52·1 | 4·7 | 0·2 | 0·2 | 4 | — : — : 23 | 9·8 | Woolly cirri, cirrous haze; scud, cumuli, &c. ⊖ |
| | 6 | 843 | 54·4 | 51·2 | 3·2 | 0·3 | 0·3 | 4 | — : 23 : — | 10·0 | Scud near horizon; dense cirro-strati and haze. |
| | 7 | 839 | 52·4 | 49·7 | 2·7 | 0·3 | 0·2 | 4 | — : 23 : — | 10·0 | As last hour. |
| | 8 | 842 | 51·5 | 49·3 | 2·2 | 0·2 | 0·0 | | | 10·0 | Scud; dense cirrous haze. |
| | 9 | 845 | 51·3 | 49·8 | 1·5 | 0·1 | 0·0 | | | 10·0 | Dark; rain[1] |
| | 10 | 840 | 50·6 | 49·9 | 0·7 | 0·0 | 0·0 | | | 10·0 | Id.; rain[2] |
| | 11 | 843 | 50·1 | 49·9 | 0·2 | 0·1 | 0·1 | | | 10·0 | Id.; rain[3] |
| | 12 | 834 | 51·0 | 50·7 | 0·3 | 0·1 | 0·1 | | | 10·0 | Id.; rain[1·5] |
| | 13 | 29·828 | 51·0 | 50·4 | 0·6 | 0·3 | 0·3 | 4 | | 10·0 | Dark; rain[2] |
| | 14 | 819 | 50·5 | 49·4 | 1·1 | 0·5 | 0·3 | 6 | | 10·0 | Id.; rain[1·5] |
| | 15 | 811 | 50·0 | 49·2 | 0·8 | 0·6 | 0·5 | 5 | | 10·0 | Id.; id. |
| | 16 | 796 | 49·5 | 49·0 | 0·5 | 0·5 | 0·3 | 4 | | 10·0 | Id.; rain[1·0] |
| | 17 | 777 | 49·5 | 49·0 | 0·5 | 0·7 | 0·6 | 6 | | 10·0 | Id.; id. |
| | 18 | 778 | 49·5 | 48·6 | 0·9 | 0·9 | 0·8 | 6 | 6 : — : — | 10·0 | Scud moving rapidly; rain[2] |
| | 19 | 780 | 49·7 | 48·8 | 0·9 | 1·1 | 0·5 | 6 | 7 : — : — | 10·0 | Scud; dense mass of cirro-strati; rain[1·5] |
| | 20 | 780 | 50·0 | 49·1 | 0·9 | 1·4 | 0·7 | 6 | 7 : — : — | 10·0 | Id.; rain[2] |
| | 21 | 769 | 50·9 | 50·0 | 0·9 | 1·5 | 1·7 | 5 | 7 : — : — | 10·0 | Id.; rain[1·5] |
| | 22 | 769 | 50·3 | 49·6 | 0·7 | 1·7 | 1·2 | 6 | 7 : — : — | 10·0 | Id.; rain[2] |
| | 23 | 758 | 50·4 | 50·0 | 0·4 | 1·4 | 0·7 | 8 | 7 : — : — | 10·0 | Id.; rain[3] |
| 14 | 0 | 736 | 51·7 | 51·3 | 0·4 | 0·6 | 0·5 | 5 | 7 : — : — | 10·0 | Id.; rain[0·5] |
| | 1 | 727 | 53·3 | 52·8 | 0·5 | 0·6 | 0·4 | 4 | 7 : — : — | 10·0 | Id.; rain[1] |
| | 2 | 708 | 55·0 | 54·3 | 0·7 | 0·4 | 0·4 | 4 | 7 : — : — | 10·0 | Id.; id. |
| | 3 | 700 | 54·9 | 54·0 | 0·9 | 0·5 | 0·4 | 5 | 8 : — : — | 10·0 | Id.; rain[2] |
| | 4 | 691 | 54·7 | 54·0 | 0·7 | 0·5 | 0·1 | 4 | 8 : — : — | 10·0 | Id.; id. |
| | 5 | 676 | 55·0 | 54·3 | 0·7 | 0·4 | 0·3 | 4 | 8 : — : — | 10·0 | Id.; id. |
| | 6 | 665 | 54·9 | 54·3 | 0·6 | 0·4 | 0·3 | 4 | 8 : — : — | 10·0 | Id.; rain[1] |
| | 7 | 662 | 54·9 | 54·3 | 0·6 | 0·3 | 0·2 | 4 | | 10·0 | Id.; rain[2] |
| | 8 | 669 | 54·7 | 54·2 | 0·5 | 0·2 | 0·2 | 4 | | 10·0 | Id.; rain[1] |
| | 9 | 667 | 54·8 | 54·3 | 0·5 | 0·2 | 0·2 | 4 | | 10·0 | Dark; rain[0·5] |
| | 10 | 667 | 54·9 | 54·5 | 0·4 | 0·2 | 0·2 | 4 | | 10·0 | Id.; id. |
| | 11 | 657 | 55·0 | 54·7 | 0·3 | 0·1 | 0·0 | 4 | | 10·0 | Id.; id. |
| | 12 | 643 | 54·9 | 54·7 | 0·2 | 0·1 | 0·0 | 4 | | 10·0 | Id.; fair. |
| | 23 | 29·430 | 58·3 | 57·7 | 0·6 | 0·2 | 0·1 | 5 | 8 : — : — | 10·0 | Sunday—Continuous rain till 2h. |
| 15 | 4 | 29·357 | 61·6 | 59·6 | 2·0 | 0·2 | 0·1 | 24 | 26 : — : — | 9·8 | Scud; cirri above. |
| | 13 | 29·377 | 57·9 | 56·5 | 1·4 | 0·7 | 0·3 | 21 | | 9·5 | Scud. |
| | 14 | 379 | 57·2 | 55·2 | 2·0 | 0·6 | 0·3 | 20 | | 1·0 | Scud near horizon. |
| | 15 | 373 | 56·4 | 54·6 | 1·8 | 0·5 | 0·3 | 21 | | 1·0 | Thin clouds. |
| | 16 | 375 | 55·6 | 53·7 | 1·9 | 0·6 | 0·4 | 24 | | 0·7 | Id. |
| | 17 | 379 | 54·7 | 52·7 | 2·0 | 0·7 | 0·4 | 22 | | 2·5 | Scud; cirro-strati. |
| | 18 | 379 | 55·5 | 52·8 | 2·7 | 1·5 | 0·9 | 21 | 25 : — : — | 3·0 | Id.; id. |
| | 19 | 401 | 54·3 | 52·1 | 2·2 | 1·0 | 0·4 | 20 | 23 : — : — | 4·5 | Id.; id. ⊙ |
| | 20 | 407 | 56·8 | 54·9 | 1·9 | 1·4 | 0·8 | 20 | 24 : — : — | 8·0 | Id.; id. ⊖ |
| | 21 | 408 | 58·4 | 55·0 | 3·4 | 1·6 | 1·1 | 20 | 24 : — : — | 8·0 | Id.; id. ⊖ |
| | 22 | 429 | 59·9 | 56·1 | 3·8 | 1·8 | 0·8 | 21 | 24 : 26 : — | 9·0 | Id.; cirro-cumulo-strati; cirro-strati. |
| | 23 | 424 | 60·9 | 56·8 | 4·1 | 1·4 | 1·0 | 21 | 24 : — : — | 8·5 | Id.; id.; id. ⦶ |
| 16 | 0 | 433 | 64·2 | 58·8 | 5·4 | 1·4 | 1·2 | 21 | 24 : — : — | 6·0 | Id.; loose cumuli; cirro-strati. ⦶ |
| | 1 | 438 | 63·5 | 57·6 | 5·9 | 1·5 | 1·5 | 22 | 24 : — : — | 7·0 | Id.; id. ⊖ |

The direction of the wind is indicated by the number of the point of the compass, reckoning N. = 0, E. = 8, S. = 16, W. = 24. The motions of the three strata of clouds, Sc. (scud), C.-s. (cirro-stratus), and Cir. (cirrus), are indicated in a similar manner.

Sept. 14d 23h. Observation made at 23h 30m.

Sept. 15d 4h. Observation made at 4h 40m.

| Gött. Mean Time. | Barometer at 32°. | Thermometers. Dry. | Wet. | Diff. | Wind. Maximum force in 1h. | 10m. | From | Clouds, Sc. : C.-s. : Ci., moving from | Sky clouded. | Species of Clouds and Meteorological Remarks. |
|---|---|---|---|---|---|---|---|---|---|---|
| d. h. | in. | ° | ° | ° | lbs. | lbs. | pt. | pt. pt. pt. | 0—10. | |
| 16 2 | 29·446 | 63·0 | 57·0 | 6·0 | 1·3 | 0·8 | 22 | 26 : — : — | 3·0 | Loose cumuli; cirro-strati. ◐ |
| 3 | 458 | 61·3 | 57·1 | 4·2 | 1·5 | 0·6 | 24 | 24 : 25 : — | 5·0 | Scud; loose cumuli; cirro-strati. ⊖ |
| 4 | 463 | 64·0 | 58·0 | 6·0 | 0·6 | 0·7 | 22 | 25 : 26 : — | 7·0 | Id.; id.; id. ⊖ |
| 5 | 470 | 62·0 | 56·8 | 5·2 | 0·7 | 0·6 | 23 | — : 25 : — | 3·5 | Cirro-stratous scud; loose cumuli; cirro-strati. ⊖ |
| 6 | 467 | 59·8 | 55·3 | 4·5 | 0·7 | 0·5 | 22 | — : — : 26 | 1·5 | Scud; loose cumuli; cirro-strati; cirri. ⊙ |
| 7 | 480 | 58·3 | 54·3 | 4·0 | 0·5 | 0·4 | 20 | 24 : — : — | 0·8 | Id.; cirro-strati and cirri. |
| 8 | 486 | 57·1 | 53·1 | 4·0 | 0·6 | 0·4 | 23 | 26 : 26 : — | 0·6 | Id.; cirro-strati; cirri. |
| 9 | 497 | 54·2 | 51·8 | 2·4 | 0·3 | 0·2 | 24 | | 0·3 | Id. |
| 10 | 498 | 52·0 | 50·3 | 1·7 | 0·2 | 0·1 | | | 0·2 | Id. |
| 11 | 509 | 50·2 | 49·5 | 0·7 | 0·1 | 0·1 | | | 0·3 | Id. |
| 12 | 514 | 49·9 | 48·9 | 1·0 | 0·1 | 0·1 | | | 1·5 | Id.; cirro-strati. |
| 13 | 29·517 | 49·7 | 48·7 | 1·0 | 0·1 | 0·1 | | | 7·5 | Scud. |
| 14 | 514 | 49·1 | 48·6 | 0·5 | 0·0 | 0·0 | | | 5·0 | Id.; stars dim. |
| 15 | 507 | 49·0 | 48·3 | 0·7 | 0·0 | 0·0 | | | 7·0 | Id.; clouds broken. |
| 16 | 509 | 48·0 | 47·7 | 0·3 | 0·0 | 0·0 | | | 6·0 | Id. |
| 17 | 503 | 47·7 | 47·4 | 0·3 | 0·0 | 0·0 | 18 | | 9·5 | Id. |
| 18 | 510 | 47·8 | 47·4 | 0·4 | 0·1 | 0·0 | 25 | — : 24 : — | 10·0 | Cirro-stratous scud; cirro-strati; heavy dew. |
| 19 | 523 | 48·7 | 48·0 | 0·7 | 0·0 | 0·0 | 6 | | 10·0 | Dense cirro-stratous scud; loose scud on E. horizon. |
| 20 | 533 | 50·3 | 49·4 | 0·9 | 0·0 | 0·0 | 6 | | 10·0 | Dense homogeneous cirro-strati. |
| 21 | 544 | 51·3 | 50·9 | 0·4 | 0·3 | 0·3 | 4 | | 10·0 | Scotch mist; rain$^{0·5}$ |
| 22 | 559 | 51·7 | 51·2 | 0·5 | 0·3 | 0·2 | 6 | 6 : — : — | 10·0 | Id.; scud; rain$^{0·5}$ |
| 23 | 567 | 52·6 | 51·7 | 0·9 | 0·3 | 0·4 | 2 | 6 : — : — | 10·0 | Id. |
| 17 0 | 572 | 52·0 | 51·3 | 0·7 | 0·5 | 0·4 | 4 | 4 : — : — | 10·0 | Id. |
| 1 | 586 | 51·9 | 51·0 | 0·9 | 0·8 | 0·8 | 4 | 4 : — : — | 10·0 | Id. |
| 2 | 593 | 52·0 | 50·0 | 2·0 | 0·8 | 0·4 | 3 | 4 : — : — | 10·0 | Scud; dense homogeneous cirro-strati. |
| 3 | 598 | 51·6 | 50·3 | 1·3 | 0·5 | 0·6 | 4 | 4 : — : — | 10·0 | Id.; Scotch mist; rain$^{0·5}$ |
| 4 | 605 | 51·8 | 51·2 | 0·6 | 0·6 | 0·5 | 4 | | 10·0 | Id.; rain$^{2}$ |
| 5 | 618 | 51·9 | 51·0 | 0·9 | 0·5 | 0·3 | 4 | 4 : — : — | 10·0 | Id.; rain$^{1}$ |
| 6 | 637 | 52·0 | 51·3 | 0·7 | 0·4 | 0·3 | 4 | 4 : — : — | 10·0 | Id.; id. |
| 7 | 649 | 51·7 | 51·2 | 0·5 | 0·3 | 0·2 | 4 | 4 : — : — | 10·0 | Id.; rain$^{0·5}$ |
| 8 | 667 | 51·5 | 50·9 | 0·6 | 0·5 | 0·3 | 3 | | 10·0 | Id.; id. |
| 9 | 690 | 51·0 | 50·5 | 0·5 | 0·5 | 0·3 | 3 | | 10·0 | Id.; Scotch mist; rain$^{0·3}$ |
| 10 | 699 | 50·5 | 50·0 | 0·5 | 0·5 | 0·4 | 4 | | 10·0 | Rain$^{0·3}$ |
| 11 | 718 | 50·2 | 49·0 | 1·2 | 0·8 | 0·3 | 3 | | 10·0 | Scud? |
| 12 | 730 | 50·0 | 48·7 | 1·3 | 0·4 | 0·2 | 3 | | 10·0 | Clouds a little broken. |
| 13 | 29·743 | 49·0 | 47·7 | 1·3 | 0·3 | 0·2 | | | 3·0 | Cirro-strati? |
| 14 | 752 | 46·0 | 45·0 | 1·0 | 0·2 | 0·1 | | | 1·8 | Id. |
| 15 | 759 | 45·0 | 44·2 | 0·8 | 0·1 | 0·0 | | | 1·5 | Id. |
| 16 | 765 | 44·1 | 43·8 | 0·3 | 0·0 | 0·0 | | | 5·0 | Cirro-strati; cirri; corona round Jupiter and Venus. |
| 17 | 774 | 42·0 | 41·7 | 0·3 | 0·0 | 0·0 | 20 | — : 4 : — | 3·0 | Cirro-stratous scud? |
| 18 | 789 | 40·1 | 40·0 | 0·1 | 0·0 | 0·0 | 20 | — : 0 : — | 1·5 | Id.? mist on the ground. |
| 19 | 814 | 43·7 | 43·2 | †0·5 | 0·1 | 0·0 | 15 | — : 1 : — | 7·0 | Cirro-cumulo-strati; scud; loose cumuli on E. hor. ● |
| 20 | 831 | 45·8 | 45·4 | ↓0·4 | 0·1 | 0·1 | 17 | — : 2 : — | 8·0 | Id.; cumuli; cirro-strati; rain$^{0·5}$ |
| 21 | 844 | 49·0 | 45·9 | 3·1 | 0·9 | 0·4 | 4 | 4 : 6 : — | 7·5 | Scud; loose cumuli; cirro-cumulous scud. |
| 22 | 856 | 50·0 | 45·9 | 4·1 | 0·6 | 0·3 | 2 | 4 : — : — | 8·0 | Id.; cumuli to W. ⊖ |
| 23 | 873 | 50·8 | 48·4 | 2·4 | 0·4 | 0·8 | 2 | 3 : 4 : — | 8·0 | Id.; cir.-cum. scud; cumuli, cir.-strati, showers. ⊖ |
| 18 0 | 875 | 50·0 | 46·3 | 3·7 | 1·2 | 0·7 | 3 | 3 : 4 : — | 8·5 | Id.; id.; id. ⊖ |
| 1 | 889 | 50·6 | 45·6 | 5·0 | 1·1 | 0·5 | 4 | 3 : — : — | 10·0 | Id.; id. |
| 2 | 884 | 51·2 | 46·0 | 5·2 | 1·0 | 0·6 | 5 | 2 : — : — | 9·9 | Id. |
| 3 | 890 | 51·8 | 45·5 | 6·3 | 0·7 | 0·7 | 4 | — : 2 : — | 9·0 | Cirro-cumulous scud; cirro-cumuli; loose cumuli. ● |
| 4 | 889 | 51·0 | 45·0 | 6·0 | 0·5 | 0·8 | 4 | — : 2 : — | 9·0 | Id. ⊖ |
| 5 | 901 | 49·7 | 44·8 | 4·9 | 0·6 | 0·7 | 2 | — : 2 : — | 9·9 | Id. |
| 6 | 915 | 47·7 | 44·0 | 3·7 | 0·5 | 0·1 | 3 | — : 3 : — | 9·9 | Id. |
| 7 | 920 | 47·8 | 44·0 | 3·8 | 0·2 | 0·0 | 1 | 4 : — : — | 9·9 | Scud; cirro-cumulous scud. ☽ |
| 8 | 928 | 47·5 | 44·0 | 3·5 | 0·2 | 0·0 | 2 | | 10·0 | Scud. |
| 9 | 934 | 46·8 | 44·2 | 2·6 | 0·1 | 0·0 | | | 10·0 | Id. |

The direction of the wind is indicated by the number of the point of the compass, reckoning N. = 0, E. = 8, S. = 16, W. = 24. The motions of the three strata of clouds, Sc. (scud), C.-s. (cirro-stratus), and Cir. (cirrus), are indicated in a similar manner.

Sept. 17d 4h. Observation made at 4h 7m.

| Gött. Mean Time. | Barometer at 32°. | Thermometers. Dry. | Wet. | Diff. | Wind. Maximum force in 1h. | 10m. | From | Clouds, Sc. : C.-s. : Ci., moving from | Sky clouded. | Species of Clouds and Meteorological Remarks. |
|---|---|---|---|---|---|---|---|---|---|---|
| d. h. | in. | ° | ° | ° | lbs. | lbs. | pt. | pt. pt. pt. | 0—10. | |
| 18 10 | 29·932 | 46·7 | 43·9 | 2·8 | 0·1 | 0·0 | | | 10·0 | Scud. |
| 11 | 933 | 47·2 | 44·2 | 3·0 | 0·0 | 0·0 | | | 10·0 | Id. |
| 12 | 934 | 47·4 | 44·0 | 3·4 | 0·0 | 0·0 | | | 10·0 | Id. |
| 13 | 29·933 | 46·2 | 43·9 | 2·3 | 0·1 | 0·0 | | | 10·0 | Scud. |
| 14 | 926 | 47·0 | 44·0 | 3·0 | 0·1 | 0·0 | | | 10·0 | Id. |
| 15 | 923 | 46·9 | 44·0 | 2·9 | 0·0 | 0·0 | | | 10·0 | Id. |
| 16 | 923 | 46·6 | 44·2 | 2·4 | 0·0 | 0·0 | | | 10·0 | Id. |
| 17 | 917 | 46·0 | 44·1 | 1·9 | 0·0 | 0·0 | 22 | | 9·5 | Id. |
| 18 | 918 | 46·3 | 44·7 | 1·6 | 0·1 | 0·0 | 7 | | 9·5 | Id. |
| 19 | 927 | 46·8 | 45·0 | 1·8 | 0·0 | 0·0 | 4 | 4 : 8 : — | 9·8 | Id.; cirro-stratous scud. |
| 20 | 935 | 48·0 | 47·0 | 1·0 | 0·2 | 0·1 | 4 | 4 : 8 : — | 9·8 | Misty scud; cirro-stratous scud; cirro-cumulo-strati. |
| 21 | 933 | 49·3 | 47·9 | 1·4 | 0·0 | 0·0 | 3 | 4 : 8 : — | 10·0 | As before; rain0·2 |
| 22 | 935 | 51·7 | 49·3 | 2·4 | 0·1 | 0.1 | 4 | 4 : 8 : — | 10·0 | Id.; id. |
| 23 | 932 | 52·6 | 50·6 | 2·0 | 0·2 | 0·2 | 4 | 4 : 9 : — | 9·8 | Thin scud; cirro-cumulo-strati. ⊖ |
| 19 0 | 919 | 54·3 | 52·7 | 1·6 | 0·3 | 0·3 | 4 | 10 : — : — | 9·5 | Smoky scud; id.; heavy drops of rain. ⊖ |
| 1 | 919 | 54·9 | 50·0 | 4·9 | 0·5 | 0·4 | 6 | 10 : — : — | 9·0 | Id.; rain1 |
| 2 | 920 | 52·6 | 49·8 | 2·8 | 1·2 | 0·8 | 5 | — : 8 : — | 9·0 | Cirro-cumulous scud. ⊖ |
| 3 | 918 | 55·4 | 50·0 | 5·4 | 0·7 | 0·6 | 7 | 7 : 8 : — | 8·5 | Thin scud; cirro-cumulous scud. ⊙ |
| 4 | 916 | 54·0 | 50·0 | 4·0 | 1·3 | 0·5 | 6 | 6 : — : — | 6·5 | Smoky scud; cirro-cumulo-strati; cumuli; nimbi. ⊙ |
| 5 | 919 | 51·4 | 47·9 | †3·5 | 1·1 | 0·2 | 6 | 6 : — : — | 7·2 | As before; rain0·2 |
| 6 | 920 | 49·7 | 46·4 | ↓3·3 | 0·3 | 0·2 | 4 | 6 : — : — | 1·5 | Scud; cirro-cumulo-strati; cumuli. ◐ |
| 7 | 925 | 47·3 | 45·0 | 2·3 | 0·2 | 0·1 | 31 | 6 : — : — | 2·0 | Id. ☽ |
| 8 | 932 | 47·6 | 45·7 | 1·9 | 0·1 | 0·1 | | | 8·5 | Id.; shower2 |
| 9 | 941 | 47·0 | 46·0 | 1·0 | 0·3 | 0·1 | 6 | | 2·0 | Id.; cirro-cumulous scud; sky very clear. ☽ |
| 10 | 940 | 46·6 | 45·6 | 1·0 | 0·0 | 0·0 | 8 | | 4·0 v. | Id. |
| 11 | 949 | 47·0 | 45·8 | 1·2 | 0·1 | 0·1 | 4 | | 4·0 | Id. |
| 12 | 959 | 45·8 | 44·5 | 1·3 | 0·1 | 0·1 | 3 | | 9·0 | Id.; clouds broken; sky to N. |
| 13 | 29·960 | 47·0 | 45·7 | 1·3 | 0·1 | 0·1 | 3 | | 10·0 | Scud; rain1 |
| 14 | 962 | 47·2 | 46·0 | 1·2 | 0·2 | 0·1 | | | 9·9 | Id.; clouds broken. |
| 15 | 957 | 46·8 | 46·0 | 0·8 | 0·2 | 0·1 | | | 5·0 | Id.; id. |
| 16 | 959 | 45·8 | 44·7 | 1·1 | 0·1 | 0·1 | 5 | | 1·5 | Clouds on horizon, very clear. |
| 17 | 964 | 45·5 | 44·1 | 1·4 | 0·1 | 0·2 | 2 | | 3·0 | Id. to E. |
| 18 | 977 | 46·3 | 45·0 | 1·3 | 0·2 | 0·2 | 2 | — : 4 : — | 7·0 | Cirro-cumulous scud; cumuli, cirro-strati. |
| 19 | 29·989 | 47·0 | 45·2 | 1·8 | 0·2 | 0·1 | 4 | 6 : — : — | 8·0 | Scud; cirro-cumulous scud; cirro-strati. |
| 20 | 30·003 | 48·0 | 46·6 | 1·4 | 0·2 | 0·1 | 6 | 6 : — : — | 9·5 | Id.; cirro-strati; shower1 at 19h 50m. ⊙ |
| 21 | 016 | 51·0 | 48·1 | 2·9 | 0·3 | 0·6 | 5 | 6 : — : — | 5·0 | Detached scud and loose cumuli; cir.-cum.-str. ⊙ |
| 22 | 019 | 52·4 | 48·3 | 4·1 | 1·2 | 0·9 | 5 | 6 : 7 : — | 2·2 | Loose cumuli; loose woolly cirro-cumuli. ⊙ |
| 23 | 021 | 53·6 | 48·2 | 5·4 | 1·3 | 0·9 | 5 | 6 : — : — | 9·0 | Scud; loose cumuli. |
| 20 0 | 021 | 53·9 | 48·3 | 5·6 | 1·0 | 0·6 | 6 | 6 : — : — | 8·0 | Id.; id. |
| 1 | 029 | 53·7 | 49·1 | 4·6 | 1·1 | 0·4 | 6 | 7 : — : — | 9·9 | Id.; id.; drops of rain. |
| 2 | 030 | 53·3 | 48·8 | 4·5 | 1·5 | 0·8 | 4 | 7 : — : — | 9·8 | Id.; id.; cir.-cum. scud; drops of rain. ⊖ |
| 3 | 026 | 54·2 | 48·6 | 5·6 | 0·8 | 0·6 | 6 | 7 : — : — | 9·7 | Id.; id. ◐ |
| 4 | 025 | 54·0 | 48·5 | 5·5 | 1·0 | 0·7 | 5 | 7 : — : — | 8·0 | Id.; id. ⊙ |
| 5 | 028 | 53·0 | 48·2 | 4·8 | 1·3 | 0·5 | 6 | 6 : — : — | 8·0 | Id.; id.; cir.-str.; rain to NW. ⊙ |
| 6 | 029 | 48·3 | 46·8 | 1·5 | 1·3 | 0·3 | 6 | 6 : — : — | 9·0 | Id.; id.; cirro-cumulo-strati; cirro-strati. |
| 7 | 037 | 48·2 | 45·7 | 2·5 | 0·3 | 0·1 | | | 2·0 | Id.; id.; cirrous scud; haze to E. ☽ |
| 8 | 053 | 44·6 | 43·3 | 1·3 | 0·1 | 0·1 | 4 | | 1·5 | Id.; id. ☽ |
| 9 | 050 | 41·3 | 40·4 | 0·9 | 0·0 | 0·0 | | | 0·5 | Id.; sky very clear. ☽ |
| 10 | 057 | 39·7 | 39·2 | 0·5 | 0·0 | 0·0 | | | 4·5 | Cirro-cumulo-strati. ☽ |
| 11 | 045 | 37·6 | 37·1 | 0·5 | 0·1 | 0·0 | 18 | | 1·8 | Scud; cirro-strati? ☽ |
| 12 | 050 | 37·6 | 37·1 | 0·5 | 0·1 | 0·0 | 18 | | 0·8 | Id. |
| 13 | 30·054 | 36·0 | 35·7 | 0·3 | 0·0 | 0·0 | 20 | | 0·8 | Scud. |
| 14 | 056 | 35·3 | 35·0 | 0·3 | 0·0 | 0·0 | 20 | | 1·5 | Cirro-stratous scud. |
| 15 | 058 | 36·7 | 36·1 | 0·6 | 0·1 | 0·0 | 20 | | 9·0 | Id. |
| 16 | 053 | 38·8 | 38·4 | 0·4 | 0·0 | 0·0 | | | 8·8 | Id. |

The direction of the wind is indicated by the number of the point of the compass, reckoning N. = 0, E. = 8, S. = 16, W. = 24. The motions of the three strata of clouds, Sc. (scud), C.-s. (cirro-stratus), and Cir. (cirrus), are indicated in a similar manner.

| Gött. Mean Time. | | Barometer at 32°. | Thermometers. | | | Wind. | | | Clouds, Sc.: C.-s.: Ci., moving from | Sky clouded. | Species of Clouds and Meteorological Remarks. |
|---|---|---|---|---|---|---|---|---|---|---|---|
| | | | Dry. | Wet. | Diff. | Maximum force in 1h. | Maximum force in 10m. | From | | | |
| d. | h. | in. | ° | ° | ° | lbs. | lbs. | pt. | pt. pt. pt. | 0—10. | |
| 20 | 17 | 30·059 | 36·6 | 36·3 | 0·3 | 0·0 | 0·0 | 20 | | 1·8 | Cirro-stratous scud. |
| | 18 | 066 | 35·0 | 34·8 | 0·2 | 0·0 | 0·0 | 20 | 20 : 6 : — | 1·5 | Strati; cirro-cumulous scud; cirro-stratous scud. |
| | 19 | 079 | 35·0 | 34·7 | †0·3 | 0·1 | 0·0 | 21 | — : 6 : — | 3·5 | Cirro-stratous scud; mist in valleys. ◐ |
| | 20 | 088 | 40·0 | 39·8 | ‡0·2 | 0·1 | 0·0 | 20 | — : 5 : — | 9·5 | Cirro-cumulo-strati. ● |
| | 21 | 089 | 43·5 | 43·0 | 0·5 | 0·0 | 0·0 | 20 | — : 6 : — | 3·0 | Id. |
| | 22 | 090 | 49·1 | 47·3 | 1·8 | 0·1 | 0·0 | 4 | — : 6 : — | 9·5 | Id. ⊖ |
| | 23 | 094 | 51·2 | 48·2 | 3·0 | 0·1 | 0·1 | 4 | — : 8 : — | 9·5 | Id. |
| 21 | 0 | 089 | 52·7 | 47·9 | 4·8 | 0·1 | 0·1 | 3 | — : 9 : — | 9·0 | Cirro-cumulous scud; loose cumuli. ◐ |
| | 1 | 086 | 53·8 | 47·7 | 6·1 | 0·2 | 0·2 | 3 | — : 11 : — | 9·5 | Id. ● |
| | 2 | 090 | 54·2 | 48·2 | 6·0 | 0·3 | 0·3 | 6 | 8 : — : — | 9·9 | Thick scud. |
| | 3 | 098 | 52·7 | 47·0 | 5·7 | 0·2 | 0·2 | 3 | | 9·9 | Id. |
| | 4 | 091 | 52·3 | 47·8 | 4·5 | 0·3 | 0·2 | 3 | 8 : — : — | 9·9 | Id.; greenish sky to NE. |
| | 5 | 081 | 52·0 | 47·4 | 4·6 | 0·2 | 0·2 | 5 | 4 : — : — | 9·9 | Id. ● |
| | 6 | 080 | 50·9 | 47·1 | 3·8 | 0·1 | 0·2 | 4 | 4 : — : — | 9·5 | Scud; cirro-stratous scud. |
| | 7 | 079 | 48·9 | 46·2 | 2·7 | 0·1 | 0·0 | 3 | — : 4 : — | 8·8 | Cirro-cumulous scud; cirrous haze to NE.. |
| | 8 | 083 | 43·9 | 43·0 | 0·9 | 0·0 | 0·0 | 30 | | 0·5 | Id. ☽ |
| | 9 | 078 | 39·3 | 39·1 | 0·2 | 0·0 | 0·0 | 18 | | 0·0 | Heavy dew. ☽ |
| | 10 | 072 | 38·0 | 37·7 | 0·3 | 0·0 | 0·0 | 26 | | 0·0 | Id. ☽ |
| | 11 | 080 | 35·1 | 34·9 | 0·2 | 0·0 | 0·0 | 20 | | 0·0 | Id. ☽ |
| | 12 | 078 | 33·8 | 33·6 | 0·2 | 0·0 | 0·0 | 20 | | 0·1 | Slight mist on the ground; cirro-strati to NE. ☽ |
| | 23 | 30·003 | 46·3 | 44·0 | 2·3 | 0·2 | 0·0 | 12 | | 1·0 | Detached cumuli round horizon. |
| 22 | 13 | 29·926 | 38·2 | 37·8 | 0·4 | 0·2 | 0·1 | 18 | | 9·9 | Cirro-cumulous scud. |
| | 14 | 910 | 37·7 | 37·2 | 0·5 | 0·0 | 0·0 | 22 | | 8·5 | Id. ☽ |
| | 15 | 840 | 36·0 | 35·8 | 0·2 | 0·0 | 0·0 | | | 3·0 | Clouds round horizon; stars bright. |
| | 16 | 826 | 34·8 | 34·6 | 0·2 | 0·1 | 0·1 | | | 0·2 | Id. on E. horizon. |
| | 17 | 814 | 33·5 | 33·3 | 0·2 | 0·1 | 0·1 | 21 | | 2·0 | Id. round horizon. |
| | 18 | 808 | 35·4 | 35·1 | 0·3 | 0·0 | 0·0 | 20 | 4 : — : — | 9·9 | Thick scud; heavy dew on the ground. |
| | 19 | 807 | 37·3 | 36·9 | 0·4 | 0·1 | 0·1 | 22 | 6 : — : — | 9·9 | Scud, moving slowly. |
| | 20 | 804 | 39·2 | 38·6 | 0·6 | 0·1 | 0·0 | 22 | 4 : — : — | 9·9 | Id. |
| | 21 | 801 | 41·1 | 40·4 | 0·7 | 0·1 | 0·1 | 22 | 4 : 4 : — | 10·0 | Scud; cirro-stratous scud; strati to E. |
| | 22 | 796 | 43·6 | 42·3 | 1·3 | 0·0 | 0·0 | 21 | 6 : 6 : — | 10·0 | Id.; id. |
| | 23 | 792 | 46·8 | 45·1 | 1·7 | 0·0 | 0·0 | 14 | 4 : 4 : — | 10·0 | Id.; id. |
| 23 | 0 | 794 | 46·9 | 45·0 | 1·9 | 0·0 | 0·0 | | | 10·0 | Id.; id. |
| | 1 | 792 | 51·0 | 48·3 | 2·7 | 0·0 | 0·0 | 12 | | 10·0 | Id.; id. |
| | 2 | 786 | 50·9 | 46·7 | 4·2 | 0·4 | 0·3 | 2 | 4 : 4 : — | 10·0 | Id.; id. |
| | 3 | 780 | 51·4 | 47·1 | 4·3 | 0·4 | 0·3 | 2 | | 10·0 | Id.; id. |
| | 4 | 776 | 50·8 | 47·2 | 3·6 | 0·3 | 0·3 | 2 | 4 : 4 : — | 10·0 | Id.; id. |
| | 5 | 779 | 49·3 | 47·3 | 2·0 | 0·3 | 0·2 | 2 | 4 : 4 : — | 10·0 | Id.; id.; drops of rain. |
| | 6 | 788 | 49·0 | 47·2 | 1·8 | 0·2 | 0·1 | 2 | 4 : 4 : — | 10·0 | Id.; id.; id. |
| | 7 | 794 | 48·9 | 47·1 | 1·8 | 0·2 | 0·1 | 31 | | 10·0 | Id.; drops of rain. |
| | 8 | 795 | 49·1 | 47·0 | 2·1 | 0·3 | 0·1 | 2 | | 10·0 | Id.; id. |
| | 9 | 806 | 48·8 | 47·0 | 1·8 | 0·3 | 0·1 | 1 | | 10·0 | Id. |
| | 10 | 804 | 48·9 | 46·9 | 2·0 | 0·2 | 0·2 | 0 | | 10·0 | Id. |
| | 11 | 807 | 49·2 | 47·0 | 2·2 | 0·1 | 0·1 | 0 | | 10·0 | Id. |
| | 12 | 811 | 48·7 | 46·9 | 1·8 | 0·1 | 0·0 | 0 | | 10·0 | Id. |
| | 13 | 29·812 | 48·3 | 46·5 | 1·8 | 0·0 | 0·0 | 0 | — : 6 : — | 9·9 | Cirro-cumulous scud. |
| | 14 | 812 | 48·4 | 46·6 | 1·8 | 0·0 | 0·0 | 26 | | 10·0 | Id. |
| | 15 | 813 | 48·6 | 46·8 | 1·8 | 0·0 | 0·0 | 26 | | 10·0 | Id. |
| | 16 | 814 | 48·7 | 47·1 | 1·6 | 0·0 | 0·0 | | | 10·0 | Id. |
| | 17 | 825 | 48·9 | 47·3 | 1·6 | 0·1 | 0·0 | 0 | | 10·0 | Very dark; drops of rain. |
| | 18 | 834 | 48·5 | 46·6 | 1·9 | 0·0 | 0·0 | 0 | | 10·0 | Cirro-stratous scud. |
| | 19 | 846 | 47·8 | 45·6 | 2·2 | 0·1 | 0·0 | 0 | | 10·0 | Id.; cirro-strati. |
| | 20 | 867 | 48·2 | 46·2 | 2·0 | 0·1 | 0·1 | 18 v. | | 9·8 | Id. |
| | 21 | 871 | 50·0 | 47·6 | 2·4 | 0·0 | 0·0 | 24 | — : 2 : — | 9·5 | Id. |
| | 22 | 885 | 52·8 | 48·0 | 4·8 | 0·1 | 0·1 | 26 | — : 4 : — | 7·5 | Id. ◐ |

The direction of the wind is indicated by the number of the point of the compass, reckoning N. = 0, E. = 8, S. = 16, W. = 24. The motions of the three strata of clouds, Sc. (scud), C.-s. (cirro-stratus), and Cir. (cirrus), are indicated in a similar manner.

Sept. 20d 18h. The clouds to E. were first tinged with red at 18h 5m.

Sept. 23d 14h. Observation made at 14h 9m.

| Gött. Mean Time. | Barometer at 32°. | Thermometers. Dry. | Wet. | Diff. | Wind. Maximum force in 1h. | 10m. | From | Clouds, Sc. : C.-s. : Ci., moving from | Sky clouded. | Species of Clouds and Meteorological Remarks. |
|---|---|---|---|---|---|---|---|---|---|---|
| d. h. | in. | ° | ° | ° | lbs. | lbs. | pt. | pt. pt. pt. | 0—10. | |
| 23 23 | 29·886 | 55·2 | 49·3 | 5·9 | 0·1 | 0·2 | 31 | — : 25 : — | 8·5 | Cirro-cumulous scud. ⊖ |
| 24 0 | 880 | 54·2 | 48·6 | 5·6 | 0·2 | 0·1 | 28 | 28 : 22 : — | 4·5 | Thin scud ; loose cumuli. ⊙ |
| 1 | 882 | 56·8 | 50·0 | 6·8 | 0·2 | 0·1 | 26 | 25 : — : — | 7·0 | Loose cumuli. ◐ |
| 2 | 881 | 56·5 | 50·0 | 6·5 | 0·2 | 0·1 | 23 | 25 : — : — | 5·0 | Id. ⊖ |
| 3 | 884 | 57·4 | 50·4 | 7·0 | 0·2 | 0·2 | 25 | | 2·5 | Cumuli, cumulo-strati, cirro-strati, round horizon. ⊙ |
| 4 | 880 | 56·8 | 50·8 | 6·0 | 0·2 | 0·0 | 24 | | 1·5 | Loose cumuli round horizon ; hazy to N. ⊙ |
| 5 | 878 | 55·7 | 50·0 | 5·7 | 0·1 | 0·1 | 24 | 23 : — : — | 2·0 | Scud ; loose cumuli ; hazy round horizon. ⊖ |
| 6 | 898 | 52·5 | 48·4 | 4·1 | 0·1 | 0·0 | 20 | — : 21 : — | 2·5 | Cirro-cumulo-strati ; id. ⊙ |
| 7 | 904 | 48·6 | 45·9 | 2·7 | 0·1 | 0·0 | 21 | — : 21 : — | 8·5 | Id. ; id. |
| 8 | 916 | 47·7 | 45·1 | 2·6 | 0·1 | 0·1 | 20 | — : 20 : — | 4·5 | Id. ; id. ⊀ |
| 9 | 933 | 43·3 | 42·0 | 1·3 | 0·1 | 0·2 | 20 | | 0·8 | Id. ☽ |
| 10 | 943 | 41·0 | 40·5 | 0·5 | 0·1 | 0·0 | 16 | | 0·5 | Cirro-strati. ☽ |
| 11 | 944 | 38·0 | 37·5 | 0·5 | 0·0 | 0·0 | | | 0·3 | Cirro-cumuli. ☽ |
| 12 | 946 | 36·4 | 36·0 | 0·4 | 0·0 | 0·0 | 16 | | 0·2 | Id. to SE. ; mist on the ground. ☽ |
| 13 | 29·947 | 34·7 | 34·6 | 0·1 | 0·0 | 0·0 | | | 0·0 | Slight mist on the ground ; clear. ☽ |
| 14 | 943 | 34·9 | 34·5 | 0·4 | 0·0 | 0·0 | 24 | | 0·0 | Clear. ☽ |
| 15 | 944 | 34·0 | 33·7 | 0·3 | 0·0 | 0·0 | 20 | | 0·0 | Id. ☽ |
| 16 | 937 | 34·6 | 34·1 | 0·5 | 0·0 | 0·0 | 20 | | 0·0 | Id. ☽ |
| 17 | 940 | 34·2 | 34·0 | 0·2 | 0·0 | 0·0 | | | 0·1 | Cirro-strati ; much dew. |
| 18 | 940 | 33·9 | 33·8 | 0·1 | 0·0 | 0·0 | 18 | | 0·4 | Cirro-cumuli ; cirro-strati ; cirrous haze ; hoar-frost. |
| 19 | 959 | 34·7 | 34·5 | 0·2 | 0·1 | 0·0 | 18 | 20 : 0 : — | 7·5 | Strati ; cir.-cum. ; cir.-str. ; linear and mottled cirri. ◐ |
| 20 | 964 | 38·8 | 38·7 | 0·1 | 0·1 | 0·0 | 16 | 24 : 0 : — | 2·8 | Scud ; cir.-cum., &c. as before ; thin strati. ⊙ |
| 21 | 963 | 47·5 | 46·9 | 0·6 | 0·1 | 0·1 | 18 | — : 31 : — | 8·0 | Cirro-cumulo-strati ; cirro-strati. ● |
| 22 | 968 | 51·1 | 49·7 | 1·4 | 0·3 | 0·2 | 17 | — : 31 : — | 5·0 | Id. ; id. ; scud on Cheviot. ◐ |
| 23 | 964 | 55·2 | 50·6 | 4·6 | 0·3 | 0·4 | 24 v. | 26 : 31 : — | 9·0 | Scud ; cirro-cumulo-strati ; sky milky. ● |
| 25 0 | 962 | 56·8 | 51·6 | 5·2 | 0·5 | 0·5 | 23 | 26 : 31 : — | 9·8 | As before. |
| 1 | 961 | 58·1 | 53·2 | 4·9 | 0·8 | 0·3 | 20 | 26 : 27 : — | 9·0 | Scud ; cirro-cumulo-strati. ◐ |
| 2 | 957 | 58·3 | 52·8 | 5·5 | 0·5 | 0·6 | 22 | 24 : 27 : 30 | 9·8 | Cir.-str. scud ; cir.-cum.-str. ; mottled and linear cirri. |
| 3 | 954 | 58·2 | 53·0 | 5·2 | 0·4 | 0·3 | 24 v. | 24 : 24 : — | 9·9 | Scud ; cirro-stratous scud ; cirrous haze. |
| 4 | 950 | 58·0 | 53·0 | 5·0 | 0·4 | 0·3 | 24 | 24 : 24 : — | 10·0 | Thick scud and cirro-stratous scud. |
| 5 | 949 | 57·0 | 52·1 | 4·9 | 1·1 | 0·3 | 23 | 24 : 24 : — | 10·0 | Id. |
| 6 | 955 | 55·9 | 51·8 | 4·1 | 1·0 | 0·3 | 22 | 24 : 24 : — | 10·0 | Id. |
| 7 | 963 | 54·7 | 51·1 | 3·6 | 0·3 | 0·1 | 24 | 25 : — : — | 10·0 | Id. |
| 8 | 963 | 53·5 | 50·7 | 2·8 | 0·2 | 0·2 | 20 | | 10·0 | Thick scud ; occasional breaks. ☽ |
| 9 | 964 | 52·9 | 50·4 | 2·5 | 0·2 | 0·0 | 16 | | 10·0 | Id. |
| 10 | 960 | 52·6 | 50·4 | 2·2 | 0·2 | 0·1 | 20 | 24 : — : — | 9·9 | Id. |
| 11 | 962 | 52·9 | 50·8 | 2·1 | 0·2 | 0·2 | 20 | | 10·0 | Id. |
| 12 | 950 | 52·5 | 50·8 | 1·7 | 0·3 | 0·3 | 20 | 24 : — : — | 7·5 | Id. ☽ |
| 13 | 29·940 | 52·9 | 50·9 | 2·0 | 0·4 | 0·3 | 20 | 24 : — : — | 10·0 | Thick scud. |
| 14 | 938 | 52·3 | 50·4 | 1·9 | 0·3 | 0·3 | 20 | 24 : — : — | 9·0 | Scud passing rapidly. ⊀ |
| 15 | 928 | 53·3 | 51·2 | 2·1 | 1·2 | 0·4 | 20 | | 9·5 | Scud. |
| 16 | 924 | 53·2 | 51·0 | 2·2 | 0·5 | 0·4 | 19 | 24 : — : — | 9·5 | Thick scud ; cirro-strati. ☽ |
| 17 | 920 | 53·1 | 50·9 | 2·2 | 0·5 | 0·3 | 20 | | 10·0 | Id. |
| 18 | 918 | 53·2 | 51·1 | 2·1 | 0·4 | 0·6 | 19 | 24 : — : — | 10·0 | Id. ; cirro-strati. |
| 19 | 919 | 53·5 | 51·6 | 1·9 | 1·2 | 1·0 | 19 | 24 : — : — | 9·9 | Thick scud and cirro-stratous scud. |
| 20 | 922 | 54·2 | 52·2 | 2·0 | 1·0 | 1·1 | 19 | 24 : — : — | 9·8 | Scud ; cirro-strati and cirri. |
| 21 | 924 | 55·7 | 53·0 | 2·7 | 1·0 | 0·8 | 19 | 24 : — : — | 9·8 | Id. |
| 22 | 919 | 56·9 | 54·0 | 2·9 | 1·5 | 0·7 | 18 | 24 : — : — | 9·5 | Id. ; cirro-strati and cirri. |
| 23 | 915 | 58·9 | 55·3 | 3·6 | 1·7 | 1·6 | 19 | 24 : — : — | 8·7 | Id. ; cirro-strati ; thin cirri. ⊙ |
| 26 0 | 913 | 60·8 | 56·7 | 4·1 | 1·4 | 1·1 | 18 | 24 : — : — | 9·6 | As before. |
| 1 | 911 | 61·0 | 56·6 | 4·4 | 1·3 | 1·0 | 20 | 24 : — : — | 9·8 | Scud ; cirro-strati, cirro-cumuli, and cirri. |
| 2 | 906 | 59·7 | 55·7 | 4·0 | 1·3 | 0·5 | 21 | 24 : — : — | 9·8 | Id. ; id., cirro-cumulo-strati, cirri. |
| 3 | 896 | 61·1 | 56·0 | 5·1 | 0·9 | 0·8 | 19 | 23 : — : — | 9·7 | Id. ; id. |
| 4 | 887 | 60·1 | 55·1 | 5·0 | 1·4 | 0·9 | 20 | 23 : — : — | 9·5 | Id. ; id. |
| 5 | 873 | 59·0 | 55·0 | 4·0 | 1·1 | 0·7 | 20 | 23 : — : — | 9·6 | Id. ; id. |
| 6 | 887 | 58·0 | 54·3 | 3·7 | 0·7 | 0·9 | 20 | 24 : — : — | 10·0 | Id. ; id. |

The direction of the wind is indicated by the number of the point of the compass, reckoning N. = 0, E. = 8, S. = 16, W. = 24. The motions of the three strata of clouds, Sc. (scud), C.-s. (cirro-stratus), and Cir. (cirrus), are indicated in a similar manner.

Sept. 24d 19h. Strati in the hollows ; cirro-cumulo-strati ; cirro-strati ; woolly and mottled cirri ; scud on Cheviot ; wisps of cirri lying vertically *among* the cirro-stratus to NW. ; hoar-frost. 20h. Smoky scud moving quickly, cirro-cumuli slowly.

| Gött. Mean Time. | Barometer at 32°. | Thermometers. Dry. | Wet. | Diff. | Wind. Maximum force in 1h. | 10m. | From | Clouds, Sc. : C.-s. : Ci., moving from | Sky clouded. | Species of Clouds and Meteorological Remarks. |
|---|---|---|---|---|---|---|---|---|---|---|
| d. h. | in. | | ° | ° | lbs. | lbs. | pt. | pt. pt. pt. | 0—10. | |
| 26 7 | 29·887 | 58·2 | 54·2 | 4·0 | 0·7 | 0·4 | 20 | 24 : — : — | 10·0 | Scud; cirro-strati. |
| 8 | 889 | 56·6 | 54·3 | 2·3 | 0·4 | 0·4 | 20 | | 10·0 | Id.; id. |
| 9 | 891 | 55·9 | 54·1 | 1·8 | 0·6 | 0·5 | 18 | | 10·0 | Id.; id. |
| 10 | 891 | 56·1 | 54·0 | 2·1 | 0·8 | 0·7 | 18 | 24 : — : — | 9·8 | Thick scud. |
| 11 | 877 | 55·8 | 53·6 | 2·2 | 0·8 | 0·4 | 18 | — : 24 : — | 8·8 | Cirro-stratous scud. ☽ |
| 12 | 869 | 54·8 | 53·1 | 1·7 | 0·8 | 2·1 | 18 | 21 : 25 : — | 2·5 | Scud; cirro-strati. ☽ |
| 13 | 29·864 | 53·9 | 52·6 | 1·3 | 1·7 | 1·0 | 18 | — : 25 : — | 2·0 | Woolly cirro-strati dissolving at the meridian. ☽ |
| 14 | 856 | 53·0 | 52·0 | 1·0 | 1·6 | 0·9 | 18 | — : 25 : — | 1·0 | Id. id. * ☄ |
| 15 | 853 | 53·2 | 52·0 | 1·2 | 1·0 | 0·7 | 18 | — : 25 : — | 1·5 | Id. dissolving 10° E. of meridian. ☽ |
| 16 | 848 | 53·1 | 51·8 | 1·3 | 0·4 | 0·4 | 18 | — : 25 : — | 1·0 | Id. dissolving. ☽ |
| 17 | 848 | 51·1 | 50·3 | 0·8 | 0·3 | 0·2 | 4 v. | — : 26 : — | 9·0 | Cirro-strati flowing like a semifluid. |
| 18 | 827 | 54·3 | 52·5 | 1·8 | 1·1 | 0·8 | 18 | — : 24 : — | 4·0 | Cirro-stratous scud; cirrous haze to NW. |
| 19 | 837 | 55·0 | 52·0 | 3·0 | 1·2 | 1·1 | 17 | 24 : — : — | 2·5 | Scud; woolly cirri to NE.; cirro-strati. ⊙ |
| 20 | 837 | 56·5 | 53·4 | 3·1 | 0·8 | 1·1 | 21 | 24 : — : — | 8·0 | Id.; id. |
| 21 | 828 | 57·4 | 54·0 | 3·4 | 1·7 | 0·9 | 19 | 24 : — : — | 7·0 | Loose scud; cirro-strati; cirri. |
| 22 | 844 | 61·5 | 57·2 | 4·3 | 1·0 | 1·3 | 19 | 24 : — : — | 7·5 | Id.; id. ⊙ |
| 23 | 836 | 61·3 | 57·2 | 4·1 | 1·4 | 1·5 | 19 | 24 : — : — | 4·5 | Id.; id.; loose cumuli. ⊖ |
| 27 0 | 834 | 63·7 | 59·0 | 4·7 | 1·2 | 1·1 | 20 | 24 : — : — | 5·5 | Loose scud moving rapidly; cirri, cirro-strati. ⊙ |
| 1 | 822 | 63·5 | 59·4 | 4·1 | 1·0 | 0·5 | 20 | 24 : — : — | 3·5 | Loose scud; scud on Cheviot; id. ⊙ |
| 2 | 820 | 63·2 | 59·4 | 3·8 | 0·8 | 0·9 | 20 | 24 : — : — | 9·5 | Thick scud; cirri; cirro-strati. ● |
| 3 | 810 | 63·2 | 59·0 | 4·2 | 1·3 | 0·9 | 21 | 23 : — : — | 8·5 | Scud; loose cumuli; id. ● |
| 4 | 797 | 62·2 | 58·8 | 3·4 | 1·5 | 1·0 | 22 | 22 : 24 : — | 8·5 | Loose scud; loose cumuli; cum., cum.-str., cir.-str. ● |
| 5 | 797 | 61·0 | 57·8 | 3·2 | 1·1 | 0·7 | 21 | 23 : — : — | 9·9 | Thick scud; haze to N. |
| 6 | 795 | 58·7 | 57·4 | 1·3 | 0·9 | 0·7 | 20 | 21 : 23 : — | 10·0 | Misty scud; scud; cirri; fine rain$^{0\cdot7}$ |
| 7 | 791 | 57·9 | 56·4 | 1·5 | 0·8 | 0·4 | 21 | 23 : — : — | 9·5 | Scud; cirro-stratous scud; woolly cirro-cumuli. |
| 8 | 788 | 57·8 | 56·3 | 1·5 | 0·6 | 0·3 | 20 | 23 : — : — | 9·5 | Nearly as before. ☄ |
| 9 | 779 | 57·6 | 56·1 | 1·5 | 0·4 | 0·4 | 20 | — : 22 : — | 7·5 | Cirro-cumulo-strati. ☄ |
| 10 | 772 | 57·1 | 55·8 | 1·3 | 0·5 | 0·4 | 20 | 22 : 23 : — | 8·5 | Misty scud; cirro-cumulo-strati. ☄ |
| 11 | 760 | 55·5 | 54·6 | 0·9 | 0·4 | 0·4 | 24 | 21 : — : — | 2·0 | Loose scud; cirro-strati on horizon. ☽ |
| 12 | 753 | 56·2 | 55·0 | 1·2 | 0·3 | 0·3 | 23 | 24 : — : — | 7·5 | Scud. ☽ |
| 13 | 29·745 | 56·9 | 55·4 | 1·5 | 0·9 | 0·5 | 19 | — : 22 : — | 9·0 | Cirro-cumulous scud. ☄ |
| 14 | 741 | 56·9 | 55·3 | 1·6 | 0·5 | 0·4 | 19 | — : 22 : — | 9·9 | Id. |
| 15 | 721 | 56·7 | 55·2 | 1·5 | 0·4 | 0·4 | 20 | | 10·0 | Id., more homogeneous. |
| 16 | 708 | 56·3 | 54·8 | 1·5 | 0·5 | 0·2 | 20 | | 10·0 | Id. |
| 17 | 701 | 56·0 | 54·4 | 1·6 | 0·4 | 0·1 | 23 | | 10·0 | Thick scud and cirro-stratous scud. |
| 18 | 680 | 55·9 | 54·0 | 1·9 | 1·0 | 0·7 | 18 | 21 : 21 : — | 9·9 | Scud; cirro-stratous scud. |
| 19 | 687 | 55·9 | 54·0 | 1·9 | 0·6 | 0·3 | 18 | 22 : — : — | 9·5 | Watery and cirro-stratous scud; cirro-strati; cirri. |
| 20 | 679 | 56·0 | 53·9 | 2·1 | 1·1 | 0·5 | 19 | 22 : — : — | 9·9 | Nearly as before. |
| 21 | 682 | 57·0 | 54·4 | 2·6 | 0·8 | 0·6 | 19 | 22 : — : — | 10·0 | Id. |
| 22 | 689 | 59·5 | 55·8 | 3·7 | 0·7 | 1·1 | 19 | 21 : 23 : — | 10·0 | Loose scud; watery scud; cirro-strati. |
| 23 | 665 | 58·7 | 55·2 | 3·5 | 1·1 | 1·1 | 20 | 22 : 23 : — | 10·0 | Id.; id.; id. |
| 28 0 | 662 | 59·3 | 55·8 | 3·5 | 1·1 | 0·4 | 20 | 24 : 24 : — | 9·9 | Loose and cir.-str. scud; cir.-str.; cir. haze; sky green. |
| 1 | 652 | 59·0 | 54·4 | 4·6 | 0·6 | 0·8 | 20 | 24 : — : — | 10·0 | Loose scud; homogeneous mass. |
| 2 | 646 | 58·4 | 54·0 | 4·4 | 1·2 | 0·8 | 20 | 24 : — : — | 10·0 | Id.; homogeneous cirrous mass; drops of rain. |
| 3 | 626 | 58·3 | 54·9 | 3·4 | 1·5 | 0·8 | 20 | | 10·0 | Patches of scud; homogeneous cirrous mass; rain$^{0\cdot5}$ at |
| 4 | 630 | 57·7 | 54·1 | 3·6 | 1·2 | 0·4 | 20 | 22 : — : — | 10·0 | Id.; id. [2h 30m. |
| 5 | 629 | 56·9 | 54·3 | 2·6 | 1·0 | 0·8 | 20 | 22 : — : — | 10·0 | As before; rain$^{1}$ |
| 6 | 661 | 50·0 | 49·2 | 0·8 | 1·6 | 1·2 | 4 | 2 : 27 : — | 10·0 | Scud; rain$^{2}$; stormy looking. |
| 7 | 704 | 48·6 | 47·9 | 0·7 | 1·0 | 0·7 | 2 | 3 : — : — | 10·0 | Id.; rain$^{1}$ |
| 8 | 741 | 47·8 | 46·9 | 0·9 | 1·0 | 0·4 | 2 | | 10·0 | Id.; id. |
| 9 | 770 | 47·7 | 46·2 | 1·5 | 0·9 | 0·3 | 3 | | 10·0 | Id. |
| 10 | 779 | 47·3 | 46·0 | 1·3 | 0·2 | 0·0 | 31 | — : 30 : — | 9·0 | Cirro-stratous scud; cumuli to NE. |
| 11 | 799 | 45·5 | 44·2 | 1·3 | 0·2 | 0·2 | 31 | | 1·0 | Id. ☽ |
| 12 | 819 | 44·0 | 42·5 | 1·5 | 0·3 | 0·3 | 31 | | 0·5 | Cumuli; cirro-strati on E. horizon. ☽ |
| 23 | 29·967 | 48·6 | 43·7 | 4·9 | 0·5 | 0·2 | 22 | | ..... | Sunday—Forenoon, clear; afternoon, overcast, scud and cumuli. |

The direction of the wind is indicated by the number of the point of the compass, reckoning N. = 0, E. = 8, S. = 16, W. = 24. The motions of the three strata of clouds, Sc. (scud), C.-s. (cirro-stratus), and Cir. (cirrus), are indicated in a similar manner.

* See additional meteorological notes after the *Hourly Meteorological Observations*.

Sept. 28d 6h. Two currents of thick watery scud; the lower from NNE., newly sprung up; the upper from NW by W. There seems to be little difference in the heights of the currents, or of the kinds of scud: they probably become the same current in a short time.

| Gött. Mean Time. | Barometer at 32°. | Thermometers. Dry. | Wet. | Diff. | Wind. Maximum force in 1h. | 10m. | From | Clouds, Sc. : C.-s. : Ci., moving from | Sky clouded. | Species of Clouds and Meteorological Remarks. |
|---|---|---|---|---|---|---|---|---|---|---|
| d. h. | in. | ° | ° | ° | lbs. | lbs. | pt. | pt. pt. pt. | 0—10. | |
| 29 13 | 30·078 | 37·3 | 37·0 | 0·3 | 0·7 | 0·0 | | | 0·0 | Clear. ☽ |
| 14 | 083 | 36·6 | 35·9 | 0·7 | 0·0 | 0·0 | | | 0·5 | Cirri and cirro-strati to W. ☽ |
| 15 | 074 | 35·9 | 35·7 | 0·2 | 0·0 | 0·0 | 22 | | 1·0 | Cirro-cumuli ; cirri ; cirro-strati. ☽ |
| 16 | 062 | 34·1 | 33·9 | 0·2 | 0·0 | 0·0 | 20 | — : 28 : — | 6·0 | As before ; lunar corona. ☽ |
| 17 | 055 | 37·1 | 36·8 | 0·3 | 0·0 | 0·0 | 22 | | 10·0 | Homogeneous cirro-strati. |
| 18 | 054 | 38·0 | 37·6 | 0·4 | 0·0 | 0·0 | 22 | — : 28 : — | 9·9 | Cirro-stratous scud ; clouds tinged with red to E. |
| 19 | 054 | 38·8 | 37·4 | 1·4 | 0·1 | 0·0 | 20 | — : 28 : — | 10·0 | Id. ; id. ; cirri to E. |
| 20 | 050 | 41·9 | 41·0 | 0·9 | 0·1 | 0·0 | 22 | — : 28 : — | 9·0 | Cirro-cumuli ; cirro-strati ; haze. ⊖ |
| 21 | 045 | 46·8 | 44·9 | 1·9 | 0·1 | 0·1 | 16 v. | — : 28 : — | 9·9 | Cirro-cumulo-strati ; cirro-strati ; cirrous haze. ⊖ |
| 22 | 022 | 48·8 | 46·1 | 2·7 | 0·3 | 0·2 | 22 | — : 28 : — | 9·9 | Id. ; id. ; id. |
| 23 | 30·001 | 50·9 | 47·4 | 3·5 | 0·6 | 0·2 | 22 | — : 28 : — | 9·5 | Id. ; cirri ; cirro-strati ; cir. haze. ⊖ |
| 30 0 | 29·985 | 54·0 | 50·5 | 3·5 | 1·1 | 0·6 | 21 | 21 : — : 28 | 7·5 | Scud ; loose cumuli ; cirri ; cirro-strati ; cumuli. ⊖ |
| 1 | 950 | 57·0 | 51·3 | 5·7 | 1·9 | 1·1 | 17 v. | 20 : — : — | 9·0 | Id. ; cirri ; cirro-strati. ⊖ |
| 2 | 920 | 56·9 | 50·0 | 6·9 | 2·6 | 2·5 | 20 | 20 : — : 28 | 8·5 | Id. ; id. |
| 3 | 885 | 56·2 | 50·2 | 6·0 | 2·8 | 2·2 | 20 | 20 : — : — | 9·0 | Id. ; id. ; cirro-strati ; cirrous haze. ⊖ |
| 4 | 862 | 55·9 | 50·3 | 5·6 | 2·3 | 2·6 | 20 | | 9·8 | Pat. of scud ; cir., cir.-str., cir. haze ; cum. on E. hor. ; faint solar |
| 5 | 839 | 54·9 | 49·0 | 5·9 | 2·5 | 0·5 | 22 | 20 : — : 24 | 9·5 | Thin scud ; cirri ; cirro-strati. ⊖ [halo. ● |
| 6 | 809 | 54·2 | 49·7 | 4·5 | 2·0 | 2·2 | 20 | 20 : 22 : — | 9·0 | Scud ; large loose cirro-cumuli ; cirri. |
| 7 | 793 | 54·0 | 50·6 | 3·4 | 2·7 | 2·5 | 20 | 20 : 22 : — | 10·0 | Id. ; cirro-strati and cirro-cumuli. |
| 8 | 771 | 54·7 | 51·0 | 3·7 | 2·7 | 1·6 | 22 | | 9·8 | Id. ; cirro-strati. |
| 9 | 752 | 54·9 | 51·1 | 3·8 | 2·5 | 1·5 | 20 | | 9·8 | Id. ; id. |
| 10 | 716 | 54·7 | 51·1 | 3·6 | 3·2 | 1·9 | 20 | | 9·8 | Id. ; id. ; cirro-cumulous scud. |
| 11 | 701 | 53·9 | 51·0 | 2·9 | 3·1 | 2·1 | 20 | 22 : — : — | 10·0 | Id. ; ☽ |
| 12 | 664 | 53·2 | 50·8 | 2·4 | 3·8 | 3·0 | 20 | | 5·0 | Id. ; wind in gusts. ☽ |
| 13 | 29·641 | 53·7 | 51·2 | 2·5 | 3·1 | 2·0 | 20 | | 10·0 | Homogeneous mass. |
| 14 | 639 | 54·3 | 51·8 | 2·5 | 3·3 | 2·1 | 20 | | 10·0 | Id. ; drops of rain. |
| 15 | 630 | 53·1 | 52·0 | 1·1 | 2·2 | 1·6 | 20 | | 10·0 | Id. ; very light rain. |
| 16 | 622 | 53·3 | 52·2 | 1·1 | 1·6 | 1·2 | 21 | | 10·0 | Id. ; id. |
| 17 | 603 | 53·0 | 52·2 | 0·8 | 1·3 | 1·0 | 20 | | 10·0 | Id. ; rain$^{1·5}$ |
| 18 | 608 | 53·2 | 52·8 | 0·4 | 1·0 | 0·3 | 20 | | 10·0 | Scud. |
| 19 | 622 | 52·9 | 50·9 | 2·0 | 0·4 | 0·4 | 21 | — : 22 : — | 7·0 | Cirro-stratous scud ; patches of loose scud. |
| 20 | 626 | 51·8 | 49·1 | 2·7 | 0·8 | 0·6 | 22 | | 1·0 | Loose scud and cirro-strati near horizon. ⊙ |
| 21 | 629 | 52·7 | 49·6 | 3·1 | 0·6 | 0·3 | 22 | 25 : — : — | 1·2 | As before. ⊙ |
| 22 | 632 | 55·1 | 49·3 | 5·8 | 0·9 | 1·4 | 24 | 24 : — : — | 3·0 | Scud ; loose cumuli ; cirri ; cirro-strati. ⊙ |
| 23 | 628 | 56·3 | 49·6 | 6·7 | 3·1 | 1·6 | 25 | 24 : — : 24 | 8·5 | Id. ; thick woolly cirri and cirro-strati. ◐ |
| 1 0 | 640 | 56·9 | 49·2 | 7·7 | 1·7 | 1·6 | 25 | 24 : 24 : — | 9·8 | Id. ; cirro-strati and cirrous haze. ● |
| 1 | 625 | 56·1 | 49·0 | 7·1 | 1·9 | 0·6 | 22 | 24 : 24 : — | 10·0 | As before. |
| 2 | 602 | 55·9 | 49·1 | 6·8 | 2·1 | 0·9 | 22 | 24 : 24 : — | 9·8 | Scud ; dense cirro-strati and haze. |
| 3 | 617 | 55·7 | 50·3 | 5·4 | 1·6 | 1·6 | 22 | 24 : — : — | 10·0 | Id. |
| 4 | 599 | 54·4 | 49·2 | 5·2 | 1·8 | 1·0 | 21 | 24 : — : — | 10·0 | Id. |
| 5 | 593 | 53·9 | 49·7 | 4·2 | 1·7 | 0·6 | 21 | 24 : — : — | 10·0 | Id. |
| 6 | 595 | 52·5 | 49·2 | 3·3 | 0·9 | 0·5 | 20 v. | 23 : — : — | 9·9 | Id. ; dense cirro-strati and haze. |
| 7 | 572 | 52·1 | 48·3 | 3·8 | 0·9 | 0·4 | 21 | | 10·0 | Id. ; id. |
| 8 | 562 | 49·9 | 48·7 | 1·2 | 0·6 | 0·4 | 20 | | 10·0 | Dense clouds ; rain$^{0·5}$ at 7h 30m. |
| 9 | 535 | 50·0 | 48·8 | 1·2 | 0·5 | 0·4 | 20 | | 10·0 | Id. ; drops of rain. |
| 10 | 496 | 50·3 | 48·6 | 1·7 | 0·8 | 0·9 | 20 | — : 22 : — | 5·0 | Cirro-cumulo-strati. ☽ |
| 11 | 462 | 51·3 | 48·9 | 2·4 | 1·4 | 2·1 | 20 | 22 : — : — | 10·0 | Scud ? |
| 12 | 432 | 50·9 | 48·7 | 2·2 | 1·3 | 0·5 | 20 | | 9·9 | Scud and cirrous clouds. |
| 13 | 29·353 | 50·1 | 47·8 | 2·3 | 2·0 | 2·6 | 20 | — : 24 : — | 9·0 | Cirro-cumulo-strati ; cirro-strati ; cirrous haze. ☽ |
| 14 | 332 | 51·2 | 48·7 | 2·5 | 2·0 | 1·1 | 19 | | 10·0 | Scud ; cirro-cumulo-strati ? |
| 15 | 251 | 49·3 | 47·9 | 1·4 | 2·7 | 1·5 | 20 | 24 : 24 : — | 8·8 | Id. ; homogen. cir.-str. ; cir. haze ; rain$^{1}$ since 14h. ☽ |
| 16 | 174 | 49·7 | 48·0 | 1·7 | 2·7 | 2·5 | 20 | 24 : — : — | 9·0 | Id. ; cirrous haze ; rain$^{1}$ ☽ |
| 17 | 107 | 50·9 | 49·2 | 1·7 | 3·5 | 2·9 | 19 | 22 : — : — | 10·0 | Id. ; cirrous clouds ; rain$^{0·2}$ ☽ |
| 18 | 058 | 51·3 | 50·0 | 1·3 | 2·6 | 2·8 | 20 | 20 : — : — | 10·0 | Id. ; id. ; id. ☽ |
| 19 | 011 | 52·3 | 51·0 | 1·3 | 2·5 | 1·2 | 20 | 23 : — : — | 10·0 | Id. |
| 20 | 011 | 54·0 | 50·3 | 3·7 | 4·2 | 1·5 | 20 | | 1·5 | Id. ; cirro-strati on S. horizon. ⊖ |

The direction of the wind is indicated by the number of the point of the compass, reckoning N. = 0, E. = 8, S. = 16, W. = 24. The motions of the three strata of clouds, Sc. (scud), C.-s. (cirro-stratus), and Cir. (cirrus), are indicated in a similar manner.

| Gött. Mean Time. | Barometer at 32°. | Thermometers. Dry. | Wet. | Diff. | Wind. Maximum force in 1h. | 10m. | From | Clouds, Sc. : C.-s. : Ci., moving from | Sky clouded. | Species of Clouds and Meteorological Remarks. |
|---|---|---|---|---|---|---|---|---|---|---|
| d. h. | in. | ° | ° | ° | lbs. | lbs. | pt. | pt. pt. pt. | 0—10. | |
| 1 21 | 29·004 | 55·1 | 50·6 | 4·5 | 3·3 | 2·5 | 22 | 24 : — : — | 2·0 | Scud ; cirro-strati near horizon. ⊖ |
| 22 | 29·019 | 56·8 | 51·2 | 5·6 | 2·7 | 2·4 | 22 | 25 : — : — | 6·5 | Id. ; loose cumuli ; cirro-strati. ● |
| 23 | 28·990 | 56·7 | 51·7 | 5·0 | 4·2 | 3·6 | 22 | 26 : — : — | 6·5 | Id. ; cirro-strati. ⊙ |
| 2 0 | 28·987 | 57·2 | 52·5 | 4·7 | 5·6 | 2·7 | 25 | 26 : — : — | 9·0 | Id. ; id. ● |
| 1 | 29·008 | 58·2 | 53·0 | 5·2 | 6·0 | 4·2 | 26 | 26 : — : — | 3·5 | Id. ; loose cumuli. ⊙ |
| 2 | 045 | 58·1 | 51·6 | 6·5 | 6·0 | 6·0 | 26 | | 1·0 | Scud on horizon. ⊙ |
| 3 | 095 | 57·7 | 50·6 | 7·1 | 6·8 | 6·0 | 26 | | 0·5 | Id. ⊙ |
| 4 | 122 | 56·7 | 50·0 | 6·7 | 3·9 | 5·6 | 28 | | 0·5 | Loose scud ; loose cumuli ; cumuli ; cirro-strati. ⊙ |
| 5 | 201 | 55·4 | 49·2 | 6·2 | 5·2 | 2·4 | 26 | | 1·0 | Id. ; id. ; cirro-strati ; cirri. ⊙ |
| 6 | 238 | 53·2 | 47·4 | 5·8 | 3·6 | 4·0 | 26 v. | — : 27 : — | 1·2 | Cir.-str. scud ; cir.-str. ; cirri on horizon ; hazy. ⊖ |
| 7 | 285 | 51·8 | 47·0 | 4·8 | 4·3 | 1·9 | 26 | | 1·8 | As before. |
| 8 | 311 | 51·4 | 46·8 | 4·6 | 2·1 | 2·8 | 26 | | 0·5 | Cirri ; belt of aurora, altitude 4°. |
| 9 | 368 | 51·0 | 47·3 | 3·7 | 1·7 | 0·8 | 26 | | 1·5 | Cirri ; cirro-strati ; belt of aurora, altitude 5°. |
| 10 | 369 | 51·3 | 47·7 | 3·6 | 1·5 | 0·6 | 26 | | 1·5 | Id. ; id. ; belt of aurora ? ☽ |
| 11 | 369 | 50·8 | 47·8 | 3·0 | 1·2 | 0·5 | 20 | 26 : — : — | 5·0 | Scud ; thin cirri. |
| 12 | 353 | 53·2 | 49·6 | 3·6 | 1·5 | 1·5 | 22 | | 10·0 | Id. ; cirrous clouds and haze. ☽ |
| 13 | 29·368 | 52·7 | 49·1 | 3·6 | 2·2 | 0·8 | 22 | | 10·0 | Scud ; cirrous clouds and haze. |
| 14 | 335 | 51·4 | 48·8 | 2·6 | 0·9 | 0·1 | 22 | | 10·0 | Id. ; id. |
| 15 | 335 | 53·1 | 50·3 | 2·8 | 0·6 | 0·6 | 22 | 25 : — : — | 10·0 | Id. ; cirri and cirrous haze ; drops of rain. ☽ |
| 16 | 294 | 54·5 | 50·9 | 3·6 | 1·1 | 1·5 | 22 | 24 : — : — | 9·8 | Id. ; id. ☽ |
| 17 | 270 | 54·4 | 51·2 | 3·2 | 2·4 | 0·9 | 21 | 24 : 26 : 26 | 7·0 | Id. ; cir.-cum., mottled cir., cir.-str. ; lunar corona. ☽ |
| 18 | 241 | 54·7 | 51·2 | 3·5 | 1·6 | 0·9 | 21 | 25 : 25 : — | 2·0 | Id. ; cirro-strati ; cirri. ☽ |
| 19 | 227 | 55·7 | 51·8 | 3·9 | 2·3 | 1·3 | 20 | 24 : 24 : 25 | 5·0 | Id. ; cir.-str. scud ; mottled and lin. cirri ; cir.-str. ☽ |
| 20 | 217 | 54·3 | 51·0 | 3·3 | 1·2 | 0·8 | 20 | 24 : 23 : — | 8·5 | Id. ; cirro-cumulo-strati ; cirri ; cirro-strati. ⊖ |
| 21 | 219 | 55·3 | 52·6 | 2·7 | 1·3 | 0·4 | 20 | 24 : — : — | 10·0 | Id. ; id. ; drops of rain. |
| 22 | 199 | 57·0 | 54·0 | 3·0 | 0·7 | 0·7 | 20 | 25 : 24 : — | 8·5 | Thin scud ; cirro-cumuli ; rainbow. |
| 23 | 193 | 56·9 | 54·5 | 2·4 | 1·5 | 0·6 | 20 | 24 : — : — | 9·2 | Scud ; cirro-strati ; cirri ; drops of rain. |
| 3 0 | 174 | 60·4 | 56·0 | 4·4 | 1·6 | 1·8 | 20 | 25 : — : — | 6·0 | Id. ◐ |
| 1 | 162 | 61·1 | 55·0 | 6·1 | 3·7 | 3·8 | 23 | 25 : — : — | 7·5 | Id. ; loose cumuli. |
| 2 | 185 | 57·7 | 50·9 | 6·8 | 5·8 | 3·5 | 26 | 24 : — : — | 2·5 | Id. ; id. ; cirrous haze ; sky milky. ⊖ |
| 3 | 200 | 57·7 | 50·7 | 7·0 | 7·0 | 4·2 | 28 | 25 : — : — | 6·0 | As before. |
| 4 | 211 | 56·8 | 50·1 | 6·7 | 3·9 | 3·0 | 23 | 25 : — : — | 8·0 | Scud ; loose cumuli. ⊖ |
| 5 | 223 | 56·4 | 50·0 | 6·4 | 4·0 | 4·2 | 23 | 25 : — : — | 5·5 | Id. ; id. ; linear cirri ; cirrous haze. ⊙ |
| 6 | 234 | 54·4 | 49·0 | 5·4 | 3·5 | 1·7 | 25 | 26 : — : — | 1·5 | Id. ; light cirro-strati to SW. |
| 7 | 271 | 53·4 | 48·2 | 5·2 | 3·9 | 3·1 | 24 | 26 : — : — | 0·5 | Id. |
| 8 | 298 | 52·0 | 47·9 | 4·1 | 3·2 | 2·5 | 24 | | 0·1 | Haze ? to SE. |
| 9 | 338 | 51·3 | 47·0 | 4·3 | 3·4 | 2·0 | 25 | | 0·0 | No clouds visible. |
| 10 | 367 | 50·6 | 47·0 | 3·6 | 3·4 | 1·8 | 24 | | 0·0 | Quite clear ; at 10h 5m, 0·2 of scud to W. |
| 11 | 396 | 49·3 | 45·3 | 4·0 | 2·2 | 1·5 | 22 | | 0·0 | Id. ☽ |
| 12 | 417 | 48·7 | 44·7 | 4·0 | 2·5 | 1·1 | 23 | | 0·0 | Id. ; hazy to E. ☽ |
| 13 | 29·436 | 48·9 | 44·7 | 4·2 | 1·7 | 1·0 | 23 | | 0·2 | Light cirro-strati to SW. ☽ |
| 14 | 450 | 49·0 | 44·8 | 4·2 | 1·9 | 1·8 | 23 | | 0·2 | Id. to S. and E. ☽ |
| 15 | 456 | 49·0 | 45·0 | 4·0 | 2·1 | 1·8 | 22 | | 1·5 | Cirro-strati to S. ☽ |
| 16 | 469 | 48·4 | 44·8 | 3·6 | 2·0 | 1·0 | 20 | | 1·0 | Id. ☽ |
| 17 | 502 | 48·2 | 44·7 | 3·5 | 2·3 | 0·7 | 21 | 24 : — : — | 2·5 | Scud ; cirro-strati. ☽ |
| 18 | 515 | 47·8 | 44·2 | 3·6 | 1·5 | 1·2 | 21 | — : 24 : — | 8·0 | Cirro-cumuli ; cirro-strati. ☽ |
| 19 | 543 | 48·0 | 44·6 | 3·4 | 0·8 | 0·6 | 22 | — : 24 : — | 6·5 | Cirro-cumulo-strati ; cirri ; patches of scud to SE. |
| 20 | 564 | 48·7 | 45·1 | 3·6 | 0·4 | 0·4 | 24 | — : 25 : — | 9·2 | Id. ; id. |
| 21 | 582 | 50·4 | 46·3 | 4·1 | 0·6 | 0·4 | 20 | — : 24 : — | 9·5 | Wavy and mottled cirro-cumulo-strati ; patches of scud. |
| 22 | 588 | 51·7 | 47·0 | 4·7 | 0·9 | 0·9 | 20 | — : 25 : — | 9·8 | Cirro-cumulo-strati ; undulated cirro-strati ; scud to SE. |
| 23 | 594 | 54·0 | 49·1 | 4·9 | 1·2 | 1·3 | 21 | 25 : 25 : 24 | 9·5 | Scud ; cir.-str. scud ; woolly cirro-cumuli and cirri. ● |
| 4 0 | 622 | 54·3 | 48·4 | 5·9 | 1·4 | 0·5 | 24 | 24 : — : — | 10·0 | Id. ; dense cirro-strati and cirro-cumulo-strati. |
| 1 | 621 | 55·0 | 49·1 | 5·9 | 0·5 | 0·2 | 21 | 24 : — : — | 9·9 | Id. ; cirro-cumulous scud ; cirro-strati. ⊖ |
| 2 | 623 | 55·5 | 49·0 | 6·5 | 0·9 | 0·3 | 22 | 24 : — : — | 10·0 | As before. |
| 3 | 621 | 53·3 | 48·3 | 5·0 | 0·7 | 0·3 | 20 | 24 : — : — | 10·0 | Scud ; dense cirro-strati and cirrous haze. |
| 4 | 612 | 52·7 | 48·2 | 4·5 | 0·5 | 0·1 | 20 | — : 24 : — | 10·0 | Dense cir.-str. and haze ; scud and loose cumuli on hor. |

The direction of the wind is indicated by the number of the point of the compass, reckoning N. = 0, E. = 8, S. = 16, W. = 24. The motions of the three strata of clouds, Sc. (scud), C.-s. (cirro-stratus), and Cir. (cirrus), are indicated in a similar manner.

Oct. 3d 17h. Observation made at 17h 7m.

Oct. 3d 22h. Cirro-cumulo-strati becoming dense semifluid cirro-strati or cirro-stratous scud, having an undulated appearance, the ridges of the waves lying from SW. to NE., and bent with the convexity towards the E.

| Gött. Mean Time. | | Barometer at 32°. | Thermometers. Dry. | Wet. | Diff. | Wind. Maximum force in 1h. | 10m. | From | Clouds, Sc. : C.-s. : Ci., moving from | Sky clouded. | Species of Clouds and Meteorological Remarks. |
|---|---|---|---|---|---|---|---|---|---|---|---|
| d. | h. | in. | ° | ° | ° | lbs. | lbs. | pt. | pt. pt. pt. | 0—10. | |
| 4 | 5 | 29·597 | 52·0 | 47·6 | 4·4 | 0·1 | 0·0 | 22 | | 10·0 | As before. |
| | 6 | 583 | 50·3 | 46·8 | 3·5 | 0·1 | 0·1 | 17 | | 10·0 | Id.; drops of rain. |
| | 7 | 576 | 49·2 | 46·9 | 2·3 | 0·1 | 0·1 | 18 | | 10·0 | Dense cirro-strati and haze. |
| | 8 | 575 | 48·9 | 47·3 | 1·6 | 0·1 | 0·1 | | | 10·0 | Dark; rain[1] |
| | 9 | 576 | 47·6 | 45·8 | 1·8 | 0·2 | 0·0 | | | 10·0 | Id.; rain[2] |
| | 10 | 563 | 46·0 | 45·2 | 0·8 | 0·1 | 0·1 | | | 10·0 | Id.; rain[1] |
| | 11 | 523 | 45·5 | 44·9 | 0·6 | 0·0 | 0·0 | | | 10·0 | Id.; rain[1-2] |
| | 12 | 488 | 44·8 | 44·2 | 0·6 | 0·0 | 0·0 | 4 | | 10·0 | Id.; rain[0·5] |
| | 13 | 29·439 | 44·0 | 43·7 | 0·3 | 0·2 | 0·2 | 4 | | 10·0 | Dark; rain[1-2] |
| | 14 | 417 | 44·0 | 43·8 | 0·2 | 0·2 | 0·2 | 4 | | 10·0 | Id.; rain[1] |
| | 15 | 366 | 44·0 | 43·8 | 0·2 | 0·4 | 0·3 | 3 | | 10·0 | Id.; id. |
| | 16 | 364 | 44·8 | 44·6 | 0·2 | 0·3 | 0·2 | 2 | | 10·0 | Id.; id. |
| | 17 | 344 | 45·2 | 44·9 | 0·3 | 0·3 | 0·2 | 3 | | 10·0 | Id.; rain[0·2] |
| | 18 | 351 | 46·1 | 45·6 | 0·5 | 0·2 | 0·2 | 31 | | 10·0 | Id.; id. |
| | 19 | 363 | 46·0 | 45·3 | 0·7 | 0·2 | 0·1 | 29 | | 10·0 | Nearly homogeneous. |
| | 20 | 368 | 46·0 | 45·0 | 1·0 | 0·1 | 0·0 | 29 | — : 30 : — | 10·0 | Id.; cirro-strati; loose scud to N. |
| | 21 | 387 | 47·3 | 46·1 | 1·2 | 0·1 | 0·0 | 28 | 28 : — : — | 10·0 | Scud; dense cirro-strati. |
| | 22 | 410 | 48·3 | 46·8 | 1·5 | 0·1 | 0·0 | 25 | 26 : — : — | 10·0 | Id. |
| | 23 | 409 | 49·6 | 47·8 | 1·8 | 0·1 | 0·0 | 22 | 26 : — : — | 10·0 | Id. |
| 5 | 0 | 414 | 49·2 | 47·1 | 2·1 | 0·1 | 0·2 | 23 | 26 : — : — | 10·0 | Id.; loose cumuli; cirro-strati. |
| | 1 | 416 | 50·6 | 47·2 | 3·4 | 0·5 | 0·3 | 23 | 26 : — : — | 9·9 | Scud and loose cumuli; cirro-strati. ● |
| | 2 | 414 | 51·9 | 48·2 | 3·7 | 0·3 | 0·1 | 22 | 26 : — : — | 9·9 | Thick scud; cumuli; loose cumuli; cirro-strati. |
| | 3 | 419 | 52·1 | 47·6 | 4·5 | 0·3 | 0·2 | 28 | 25 : 19 : — | 9·0 | Id.; cir.-cum.-str.; piles of cum.; cirri; cir.-str. |
| | 4 | 429 | 51·5 | 46·6 | 4·9 | 0·3 | 0·2 | 20 | 27 : — : 22 | 5·0 | Loose scud; woolly cirri; cumuli; cirro-strati. ◐ |
| | 5 | 438 | 50·0 | 45·1 | 4·9 | 0·2 | 0·1 | 28 | 27 : — : — | 3·0 | Id.; as before. |
| | 6 | 454 | 46·9 | 43·8 | 3·1 | 0·2 | 0·1 | 20 | 26 : 26 : — | 4·5 | Loose cum. and cir.-str.; sheets of cirri and cir. haze. |
| | 7 | 473 | 44·1 | 41·9 | 2·2 | 0·1 | 0·2 | 20 | — : 26 : — | 1·5 | Cirro-stratous scud; cirrous haze; rain to WNW.? |
| | 8 | 489 | 41·4 | 40·9 | 0·5 | 0·2 | 0·1 | 20 | | 0·5 | Id. |
| | 9 | 507 | 39·8 | 38·7 | 1·1 | 0·1 | 0·0 | 20 | | 0·0 | Hazy on horizon. |
| | 10 | 517 | 39·3 | 38·2 | 1·1 | 0·1 | 0·2 | 18 | | 0·0 | Id.; very faint aurora? |
| | 11 | 517 | 38·0 | 37·2 | 0·8 | 0·2 | 0·0 | | | 0·0 | Clear; auroral light to N., just perceptible. |
| | 12 | 526 | 36·4 | 36·0 | 0·4 | 0·0 | 0·0 | 22 | | 0·3 | Light clouds, chiefly to NW. |
| | 23 | 29·480 | 50·6 | 46·5 | 4·1 | 2·2 | 1·7 | 22 | 23 : — : — | ..... | Sunday—Variable; clouds, scud, cum.-str., cirri; at times clear; passing showers. |
| 6 | 13 | 29·516 | 41·0 | 38·9 | 2·1 | 3·4 | 0·6 | 21 | | 0·2 | Clouds to N. |
| | 14 | 526 | 39·2 | 37·8 | 1·4 | 0·3 | 0·1 | 20 | | 0·2 | Id. to S. and W. ☽ |
| | 15 | 528 | 39·9 | 37·9 | 2·0 | 0·3 | 0·2 | 22 | | 0·0 | Quite clear. ☽ |
| | 16 | 535 | 38·8 | 37·3 | 1·5 | 0·3 | 0·2 | 22 | | 0·0 | Id. ☽ |
| | 17 | 547 | 38·9 | 37·3 | 1·6 | 0·2 | 0·2 | 21 | | 0·2 | Cirrous clouds to E. ☽ |
| | 18 | 569 | 37·2 | 36·0 | 1·2 | 0·3 | 0·1 | 21 | | 0·2 | Cirri; cirro-strati. ☽ |
| | 19 | 584 | 38·1 | 36·7 | 1·4 | 0·3 | 0·3 | 23 | | 0·5 | Cir.-str.; cumuli on E. horizon; strati on Cheviot. ☽ |
| | 20 | 603 | 39·3 | 37·5 | 1·8 | 0·2 | 0·2 | 22 | | 0·5 | As before. ⊙ |
| | 21 | 626 | 41·6 | 39·2 | 2·4 | 0·2 | 0·2 | 22 | | 0·5 | Cirri, and as before. ⊙ [hor. ⊙ |
| | 22 | 649 | 44·4 | 41·3 | 3·1 | 0·4 | 0·6 | 25 | | 0·3 | Cir.-str.; cum. on ENE. hor.; detached cum. round |
| | 23 | 659 | 47·0 | 42·7 | 4·3 | 0·4 | 0·3 | 26 | 28 : — : — | 1·0 | Detached loose cumuli; cir.-str.; cumuli on E. hor. ⊙ |
| 7 | 0 | 668 | 49·7 | 44·6 | 5·1 | 0·4 | 0·2 | | | 4·0? | Loose cumuli. ⊖ |
| | 1 | 669 | 48·5 | 43·0 | 5·5 | 0·4 | 0·1 | 26 | 28 : — : — | 2·5 | Id. ⊙ |
| | 2 | 678 | 49·2 | 43·1 | 6·1 | 0·3 | 0·0 | 28 | 28 : — : — | 3·0 | Id.; cirri; hazy. ⊙ |
| | 3 | 683 | 48·6 | 42·9 | 5·7 | 0·4 | 0·1 | 26 | 26 : — : 28 | 8·0 | Id.; cirri; cirrous haze; solar halo. ⊖ |
| | 4 | 694 | 48·9 | 42·9 | 6·0 | 0·1 | 0·0 | 28 | 25 : — : — | 8·5 | Scud; loose cumuli; cirri; cirrous haze. |
| | 5 | 708 | 49·0 | 43·2 | 5·8 | 0·1 | 0·1 | 26 | 25 : — : 26 | 6·0 | Loose cumuli; cirri; haze on horizon. ⊙ |
| | 6 | 708 | 44·3 | 41·0 | 3·3 | 0·2 | 0·1 | 23 | — : — : 26 | 5·0 | Cirri; loose cumuli; id. |
| | 7 | 725 | 42·7 | 39·7 | 3·0 | 0·2 | 0·1 | 24 | | 0·2 | Patches of scud; cirri; id. |
| | 8 | 727 | 39·9 | 37·0 | 2·9 | 0·2 | 0·1 | | | 0·2 | Id.; |
| | 9 | 733 | 37·0 | 35·2 | 1·8 | 0·2 | 0·0 | | | 0·0 | Hazy to E. |
| | 10 | 736 | 33·9 | 33·3 | 0·6 | 0·1 | 0·0 | | | 0·0 | Id. |

Oct. 5d 2h 40m. A faint solar halo visible.
Oct. 5d 8h. A flash of lightning seen to E.: much lightning seen during the evening by various individuals; no thunder heard.
Oct. 7d 3h. Masses of loose cumuli, some of them apparently acted on by different currents: cirrous haze and cirri spreading over the sky; the haze on the horizon different from the cirrous haze.

| Gött. Mean Time. | Barometer at 32°. | Thermometers. Dry. | Wet. | Diff. | Wind. Maximum force in 1h. | 10m. | From | Clouds, Sc. : C.-s. : Ci., moving from | Sky clouded. | Species of Clouds and Meteorological Remarks. |
|---|---|---|---|---|---|---|---|---|---|---|
| d. h. | in. | ° | ° | ° | lbs. | lbs. | pt. | pt. pt. pt. | 0—10. | |
| 7 11 | 29·732 | 32·6 | 32·0 | 0·6 | 0·1 | 0·0 | 20 | | 0·5 | Cirri to NE.; faint aurora borealis. |
| 12 | 728 | 32·3 | 32·0 | 0·3 | 0·1 | 0·0 | 10 | | 0·2 | Id.; id. |
| 13 | 29·710 | 30·9 | 30·7 | 0·2 | 0·0 | 0·0 | | | 1·0 | Cirro-strati. |
| 14 | 705 | 32·0 | 31·7 | 0·3 | 0·0 | 0·0 | | | 0·5 | Id. |
| 15 | 676 | 30·1 | 29·9 | 0·2 | 0·0 | 0·0 | | | 2·0 | Cirro-strati; cirri; cirrous haze. ☽ |
| 16 | 671 | 32·8 | 32·2 | 0·6 | 0·1 | 0·0 | | | 9·8 | Cirrous mass; stars dim. |
| 17 | 651 | 32·8 | 32·4 | 0·4 | 0·0 | 0·0 | 4 | | 10·0 | Id.; cirro-strati. |
| 18 | 624 | 33·7 | 33·1 | 0·6 | 0·0 | 0·0 | 18 | | 10·0 | Homogeneous cirrous mass; hoar-frost. |
| 19 | 612 | 33·8 | 33·2 | 0·6 | 0·0 | 0·0 | 7 | —:20:— | 10·0 | Cirro-stratous scud; cirro-strati; haze; sky red to E. |
| 20 | 604 | 35·0 | 34·3 | 0·7 | 0·1 | 0·1 | 7 | —:21:— | 10·0 | Id.; id.; id. |
| 21 | 580 | 37·6 | 36·7 | 0·9 | 0·0 | 0·0 | 30 | —:18:— | 10·0 | Id.; id. |
| 22 | 564 | 43·8 | 42·2 | 1·6 | 0·0 | 0·2 | 17 | —:20:— | 10·0 | Id.; id.; haze. ● |
| 23 | 551 | 48·8 | 44·7 | 4·1 | 0·8 | 0·2 | 17 | | 10·0 | Cirrous mass; cirro-strati. ● |
| 8 0 | 518 | 51·7 | 46·3 | 5·4 | 0·6 | 0·4 | 18 | —:20:— | 10·0 | Cirro-stratous scud; cirro-strati; haze. |
| 1 | 479 | 51·9 | 46·2 | 5·7 | 0·5 | 0·3 | 15 | | 10·0 | As before. |
| 2 | 460 | 51·8 | 46·7 | 5·1 | 0·6 | 0·4 | 16 | | 10·0 | Dense cirro-strati and haze, breaking to SW. ● |
| 3 | 432 | 52·2 | 47·0 | 5·2 | 1·0 | 0·4 | 14 | | 10·0 | Id. ● |
| 4 | 406 | 50·8 | 45·9 | 4·9 | 0·6 | 0·5 | 15 | —:20:— | 10·0 | Id. |
| 5 | 383 | 49·6 | 45·6 | 4·0 | 0·6 | 0·3 | 15 | —:20:— | 10·0 | Id. |
| 6 | 369 | 48·8 | 45·5 | 3·3 | 0·9 | 0·6 | 16 | —:18:— | 10·0 | Cirro-strati; homogeneous cirrous mass; misty. |
| 7 | 347 | 48·6 | 45·5 | 3·1 | 1·1 | 0·3 | 15 | | 10·0 | Id.; id. |
| 8 | 317 | 49·3 | 45·8 | 3·5 | 1·9 | 1·1 | 16 | | 10·0 | Id.; id. |
| 9 | 289 | 48·8 | 45·2 | 3·6 | 2·4 | 1·9 | 16 | | 10·0 | Very dark. |
| 10 | 266 | 49·0 | 45·8 | 3·2 | 2·7 | 2·6 | 16 | | 10·0 | Id.; some stars visible at 10h 10m. |
| 11 | 247 | 48·9 | 45·8 | 3·1 | 2·3 | 1·3 | 15 | | 9·9 | Scud and cirro-strati? |
| 12 | 209 | 48·8 | 45·4 | 3·4 | 2·8 | 0·9 | 14 | | 10·0 | Dark. |
| 13 | 29·178 | 47·9 | 44·0 | 3·9 | 2·4 | 1·8 | 15 | | 10·0 | Dark. |
| 14 | 136 | 47·0 | 43·4 | 3·6 | 3·1 | 2·8 | 13 | | 10·0 | Very dark. |
| 15 | 122 | 46·8 | 43·4 | 3·4 | 2·8 | 2·7 | 14 | | 10·0 | Id. |
| 16 | 080 | 47·0 | 43·7 | 3·3 | 4·2 | 2·7 | 14 | | 10·0 | Id. |
| 17 | 060 | 46·8 | 43·7 | 3·1 | 3·1 | 3·1 | 13 | | 10·0 | Dense clouds. |
| 18 | 048 | 46·8 | 43·6 | 3·2 | 3·1 | 1·7 | 14 | | 10·0 | Cirro-strati and scud. |
| 19 | 008 | 46·9 | 43·4 | 3·5 | 5·5 | 3·8 | 14 | 13:16:— | 10·0 | Patches of scud; cir.-str.; homogeneous cirrous mass. |
| 20 | 019 | 47·1 | 43·9 | 3·2 | 4·4 | 2·4 | 14 | 13:16:— | 10·0 | Scud; id.; id. |
| 21 | 29·010 | 47·9 | 44·3 | 3·6 | 2·8 | 2·1 | 13 | 13:—:— | 10·0 | Id.; id.; id. |
| 22 | 28·994 | 48·7 | 45·0 | 3·7 | 3·0 | 2·6 | 13 | 13:—:— | 10·0 | Id.; id.; id. |
| 23 | 966 | 49·3 | 45·5 | 3·8 | 2·4 | 2·2 | 13 | 13:—:— | 10·0 | Id.; id.; id. |
| 9 0 | 954 | 50·8 | 46·2 | 4·6 | 3·5 | 2·7 | 13 | 13:—:— | 10·0 | As before; 0h 10m drops of rain. |
| 1 | 960 | 50·5 | 46·3 | 4·2 | 2·8 | 1·7 | 13 | 13:—:— | 10·0 | Id.; drops of rain occasionally. |
| 2 | 929 | 51·0 | 47·2 | 3·8 | 1·5 | 1·3 | 11 | 12:16:— | 10·0 | Scud; cirro-strati; cirrous mass breaking. |
| 3 | 916 | 51·0 | 47·3 | 3·7 | 2·0 | 1·5 | 12 | 12:—:— | 10·0 | Id.; id.; id. |
| 4 | 886 | 51·0 | 47·7 | 3·3 | 2·0 | 2·6 | 13 | 12:—:— | 10·0 | Id.; id.; id. |
| 5 | 879 | 50·6 | 48·0 | 2·6 | 2·2 | 1·3 | 12 | 12:—:— | 10·0 | Id. |
| 6 | 850 | 51·0 | 48·5 | 2·5 | 3·5 | 2·0 | 14 | 13:—:— | 10·0 | Id. |
| 7 | 850 | 51·5 | 49·1 | 2·4 | 2·6 | 1·0 | 12 | | 10·0 | Id. |
| 8 | 834 | 52·1 | 49·8 | 2·3 | 1·9 | 1·5 | 12 | | 10·0 | Very dark. |
| 9 | 805 | 52·8 | 50·1 | 2·7 | 2·5 | 1·8 | 13 | | 10·0 | Id.; drops of rain. |
| 10 | 781 | 52·3 | 50·3 | 2·0 | 2·6 | 1·1 | 13 | | 10·0 | Id.; rain0·5 |
| 11 | 758 | 52·7 | 51·0 | 1·7 | 2·3 | 2·0 | 13 | | 10·0 | Id. |
| 12 | 740 | 53·3 | 52·0 | 1·3 | 2·0 | 2·3 | 11 | | 10·0 | Id. |
| 13 | 28·710 | 54·2 | 52·3 | 1·9 | 1·0 | 1·4 | 11 | | 10·0 | Very dark, breaking to SE. |
| 14 | 696 | 55·0 | 52·8 | 2·2 | 2·5 | 2·0 | 11 | | 10·0 | Id.; rain1·0 |
| 15 | 680 | 54·6 | 51·2 | 3·4 | 2·5 | 1·8 | 13 | | 10·0 | Id., breaking to SE. |
| 16 | 677 | 53·3 | 50·3 | 3·0 | 1·7 | 2·0 | 14 | | 10·0 | Id. |
| 17 | 694 | 52·3 | 49·2 | 3·1 | 1·8 | 1·3 | 14 | | 10·0 | Id. |

The direction of the wind is indicated by the number of the point of the compass, reckoning N. = 0, E. = 8, S. = 16, W. = 24. The motions of the three strata of clouds, Sc. (scud), C.-s. (cirro-stratus), and Cir. (cirrus), are indicated in a similar manner.

| Gött. Mean Time. | | Barometer at 32°. | Thermometers. Dry. | Wet. | Diff. | Wind. Maximum force in 1h. | 10m. | From | Clouds, Sc.: C.-s.: Ci., moving from | Sky clouded. | Species of Clouds and Meteorological Remarks. |
|---|---|---|---|---|---|---|---|---|---|---|---|
| d. | h. | in. | ° | ° | ° | lbs. | lbs. | pt. | pt. pt. pt. | 0—10. | |
| 9 | 18 | 28·717 | 50·9 | 47·7 | 3·2 | 3·0 | 0·1 | 14 | | 7·0 | Scud; cirro-cumulous scud; cirro-strati. ☽ |
| | 19 | 733 | 51·2 | 47·6 | 3·6 | 1·8 | 2·9 | 16 | 18 : 16 : — | 9·7 | Id.; cirro-cumuli, cirri, and cirro-strati. |
| | 20 | 775 | 50·1 | 47·3 | 2·8 | 2·0 | 1·4 | 16 | 18 : 16 : — | 9·5 | As before. |
| | 21 | 794 | 51·6 | 48·2 | 3·4 | 1·6 | 1·2 | 16 | 17 : — : 16 | 9·5 | Scud to S.; waves of woolly cirri; cir.-cum.; cir.-str. |
| | 22 | 816 | 54·7 | 50·2 | 4·5 | 2·2 | 1·7 | 16 | — : — : 15 | 9·5 | Id.; woolly cirri; cirro-cumuli; cir.-str. ⊖ |
| | 23 | 838 | 55·7 | 51·7 | 4·0 | 2·5 | 2·0 | 16 | — : — : 15 | 9·5 | Woolly cirri and cirro-strati; patches of scud. ⊖ |
| 10 | 0 | 841 | 58·0 | 53·2 | 4·8 | 2·4 | 3·0 | 16 | 17 : 15 : — | 8·2 | Scud, &c. as at 21h. ◐ |
| | 1 | 857 | 58·9 | 53·6 | 5·3 | 2·9 | 1·4 | 17 | 17 : 15 : 15 | 8·5 | Masses of loose cumuli; cirri; cirro-strati. ⊖ |
| | 2 | 876 | 58·4 | 53·7 | 4·7 | 1·9 | 0·4 | 16 | 16 : — : — | 9·8 | Scud; loose cumuli; cirri; cirro-strati. |
| | 3 | 882 | 61·0 | 55·4 | 5·6 | 1·0 | 0·6 | 16 | 16 : — : — | 6·0 | As before. ⊙ |
| | 4 | 899 | 57·7 | 54·1 | 3·6 | 1·3 | 0·9 | 17 | 17 : — : — | 4·0 | Scud; loose cum.; double rainbow & rain0·5 at 3h 58m. ⊙ |
| | 5 | 917 | 57·0 | 54·0 | 3·0 | 0·8 | 0·3 | 18 | 16 : — : — | 7·5 | Id.; cumuli; nimbi; patches of cirri; rainbow. ⊖ |
| | 6 | 940 | 51·2 | 50·0 | 1·2 | 0·1 | 0·0 | 18 | 18 : — : — | 3·5 | Id.; id.; cirri; cirro-strati. |
| | 7 | 959 | 50·3 | 48·9 | 1·4 | 0·2 | 0·4 | 18 | | 4·5 | Id.; masses of cumuli. |
| | 8 | 28·994 | 47·0 | 46·2 | 0·8 | 0·2 | 0·0 | 17 | | 0·5 | Clouds round horizon. |
| | 9 | 29·015 | 44·8 | 44·5 | 0·3 | 0·1 | 0·0 | | | 0·2 | Clouds and haze on horizon. |
| | 10 | 037 | 45·7 | 45·0 | 0·7 | 0·3 | 0·1 | 18 | | 0·5 | Scud. |
| | 11 | 050 | 46·7 | 46·0 | 0·7 | 0·2 | 0·0 | | | 4·0 | Cirrous scud? shower0·2 |
| | 12 | 067 | 46·5 | 46·0 | 0·5 | 0·1 | 0·0 | | | 2·0 | Id. |
| | 13 | 29·089 | 45·8 | 45·5 | 0·3 | 0·2 | 0·0 | 12 | | 0·5 | Cirro-strati? |
| | 14 | 105 | 46·0 | 45·9 | 0·1 | 0·1 | 0·0 | | | 8·0 | Id. |
| | 15 | 125 | 47·1 | 46·9 | 0·2 | 0·2 | 0·3 | 18 | | 1·5 | Id. |
| | 16 | 135 | 46·9 | 46·3 | 0·6 | 0·4 | 0·2 | 18 | | 0·8 | Cirri; cirro-strati. |
| | 17 | 148 | 47·2 | 46·6 | 0·6 | 0·6 | 0·4 | 18 | | 0·0 | |
| | 18 | 156 | 46·0 | 45·5 | 0·5 | 0·4 | 0·3 | 18 | | 3·0 | Cirri; cirro-strati; cumuli and haze on horizon. |
| | 19 | 181 | 46·0 | 45·4 | 0·6 | 0·3 | 0·2 | 18 | — : 18 : — | 5·0 | Cirro-cumuli; cirro-strati; scud on hor. and Cheviot. |
| | 20 | 198 | 48·8 | 47·7 | 1·1 | 0·9 | 0·6 | 17 | — : 20 : — | 7·0 | Cirri; cirro-cumuli; scud; cirro-strati; cumuli. ⊖ |
| | 21 | 209 | 52·6 | 50·9 | 1·7 | 1·0 | 1·2 | 18 | 19 : — : — | 8·0 | Scud; cirro-strati, cirri, and cirrous haze. ⊖ |
| | 22 | 238 | 53·5 | 52·0 | 1·5 | 0·9 | 0·5 | 17 | 21 : 19 : — | 8·0 | Id.; cirro-cumuli; cirri; cirro-strati. ⊖ |
| | 23 | 251 | 54·0 | 50·5 | 3·5 | 0·9 | 0·8 | 20 | 20 : 20 : — | 6·0 | Id.; cirro-strati. ⊖ |
| 11 | 0 | 259 | 54·0 | 51·2 | 2·8 | 1·5 | 0·7 | 20 | 19 : — : — | 3·0 | Id.; cumuli; cumulo-strati; cirro-strati; cirri. ⊙ |
| | 1 | 268 | 56·3 | 51·7 | 4·6 | 1·3 | 1·1 | 18 | 19 : — : — | 9·5 | Thick scud; cirro-strati; cumuli. |
| | 2 | 281 | 56·0 | 52·3 | 3·7 | 1·7 | 1·2 | 20 | 20 : — : — | 7·0 | Scud; id.; cumuli and cirri. ⊖ |
| | 3 | 292 | 56·0 | 52·3 | 3·7 | 1·6 | 0·5 | 20 | 20 : — : — | 6·0 | As before. ⊖ |
| | 4 | 305 | 54·9 | 51·3 | 3·6 | 0·6 | 0·2 | 19 | 21 : — : — | 9·5 | Id. |
| | 5 | 321 | 53·5 | 50·7 | 2·8 | 0·6 | 0·3 | 19 | 21 : — : — | 9·5 | Scud; cir.-cum.; cirri; cir.-str.; rainbow; shower 0·5 |
| | 6 | 332 | 51·7 | 49·3 | 2·4 | 0·4 | 0·3 | 19 | 22 : 21 : — | 8·2 | Cirrous and loose scud; cirri; cirro-strati. |
| | 7 | 350 | 49·9 | 48·1 | 1·8 | 0·3 | 0·2 | 19 | | 7·8 | Nearly as before. |
| | 8 | 366 | 47·5 | 46·3 | 1·2 | 0·2 | 0·0 | | | 5·0 | Id. |
| | 9 | 372 | 50·0 | 48·4 | 1·6 | 0·2 | 0·3 | 20 | | 6·8 | Id. |
| | 10 | 371 | 46·6 | 45·8 | 0·8 | 0·2 | 0·1 | 19 | | 0·5 | Cirro-strati. |
| | 11 | 372 | 44·6 | 44·0 | 0·6 | 0·2 | 0·0 | | | 0·2 | Id. to NE. |
| | 12 | 375 | 43·8 | 43·1 | 0·7 | 0·1 | 0·0 | | | 0·0 | Clear. |
| | 13 | 29·385 | 42·8 | 42·5 | 0·3 | 0·0 | 0·0 | | | 0·1 | Patch of cloud to SW. |
| | 14 | 389 | 43·4 | 43·0 | 0·4 | 0·1 | 0·0 | | | 4·0 | Thin clouds. |
| | 15 | 389 | 43·7 | 43·1 | 0·6 | 0·1 | 0·0 | 22 | | 2·0 | Id. to SE. |
| | 16 | 384 | 42·7 | 42·1 | 0·6 | 0·0 | 0·0 | | | 2·5 | Id. |
| | 17 | 386 | 42·4 | 42·1 | 0·3 | 0·0 | 0·0 | | | 1·0 | Id. |
| | 18 | 383 | 41·0 | 40·6 | 0·4 | 0·0 | 0·0 | 16 | | 1·5 | Cirri and cirro-strati; mist and strati rising. [hor. |
| | 19 | 384 | 39·1 | 39·0 | 0·1 | 0·0 | 0·0 | 20 | — : 26 : — | 2·0 | Cirri; cir.-str.; cir.-cum.; bank of grey cum. to S.; clouds red round |
| | 20 | 392 | 40·8 | 40·7 | 0·1 | 0·1 | 0·0 | 18 | 20 : — : — | 8·0 | Scud; cirri, &c. as before. ⊙ |
| | 21 | 394 | 44·5 | 44·0 | 0·5 | 0·0 | 0·0 | 28 | 19 : 19 : 26 | 9·5 | Cir.-str. scud; woolly cirri; cirro-strati; stratus E. ⊖ |
| | 22 | 389 | 49·7 | 48·7 | 1·0 | 0·0 | 0·0 | 6 | — : 21 : 26 | 9·5 | Cir.-cum. scud; woolly cir.; cir.-str.; scud on Cheviot. ● |
| | 23 | 373 | 54·8 | 52·7 | 2·1 | 0·1 | 0·3 | 17 | 17 : 19 : — | 9·9 | Scud; woolly cirri; cirro-strati. ● |
| 12 | 0 | 364 | 55·9 | 52·8 | 3·1 | 0·5 | 0·4 | 17 | 19 : — : — | 9·9 | Id.; id. |
| | 1 | 335 | 57·8 | 54·2 | 3·6 | 0·4 | 0·3 | 17 | 19 : — : — | 9·5 | Id.; cirri; cirro-strati; cumuli to S.; rain0·5 |

The direction of the wind is indicated by the number of the point of the compass, reckoning N. = 0, E. = 8, S. = 16, W. = 24. The motions of the three strata of clouds, Sc. (scud), C.-s. (cirro-stratus), and Cir. (cirrus), are indicated in a similar manner.

Oct. 9d 23h. The cirri and cirro-strati terminate to W. in a sharply-defined edge, apparently quite straight, lying NNW. to SSE., altitude about 10°, meeting the horizon in S. and NW.; this has continued for more than an hour.

| Gött. Mean Time. | | Barometer at 32°. | Thermometers. | | | Wind. | | | Clouds, Sc. : C.-s. : Ci., moving from | Sky clouded. | Species of Clouds and Meteorological Remarks. |
|---|---|---|---|---|---|---|---|---|---|---|---|
| | | | Dry. | Wet. | Diff. | Maximum force in 1h. | Maximum force in 10m. | From | | | |
| d. | h. | in. | ° | ° | ° | lbs. | lbs. | pt. | pt. pt. pt. | 0—10. | |
| 12 | 2 | 29·318 | 57·6 | 54·8 | 2·8 | 0·2 | 0·1 | 18 | 20 : — : — | 10·0 | Scud ; cirri ; cirro-str. ; cumuli to S. ; rain$^{0\cdot5}$ |
| | 3 | 306 | 56·8 | 54·0 | 2·8 | 0·2 | 0·1 | 17 | 16 : — : — | 10·0 | Thick scud ; loose cumuli ; cirro-strati. |
| | 4 | 272 | 56·5 | 53·4 | 3·1 | 0·2 | 0·1 | 15 | — : 16 : — | 10·0 | Cirro-stratous scud ; cirro-strati. |
| | 5 | 255 | 55·4 | 53·0 | 2·4 | 0·2 | 0·1 | 15 | 18 : — : — | 10·0 | Scud ; cirrous mass ; id. |
| | 6 | 239 | 54·0 | 51·9 | 2·1 | 0·3 | 0·3 | 14 | — : 18 : — | 10·0 | Cirro-stratous scud and dense cirro-strati. |
| | 7 | 226 | 53·6 | 51·7 | 1·9 | 0·4 | 0·3 | 14 | | 10·0 | As before. |
| | 8 | 215 | 54·1 | 52·2 | 1·9 | 0·4 | 0·6 | 15 | | 10·0 | Dark. |
| | 9 | 183 | 55·0 | 53·0 | 2·0 | 1·3 | 1·3 | 16 | | 8·0 | Thin clouds. |
| | 10 | 170 | 55·3 | 53·3 | 2·0 | 1·3 | 0·9 | 15 | | 9·5 | A few stars visible ; drops of rain. |
| | 11 | 154 | 55·2 | 53·3 | 1·9 | 1·3 | 0·6 | 15 | | 5·0 | Stars dim ; id. |
| | 12 | 125 | 55·3 | 53·5 | 1·8 | 1·1 | 1·3 | 14 | | 10·0 | Dark. |
| | 23 | 29·028 | 60·1 | 55·6 | 4·5 | 1·8 | 1·3 | 18 | 16 : 18 : — | ... | Sunday—Fine day, clear and cloudy ; clouds, chiefly cauliflower cumuli, and cumulo-strati. |
| 13 | 13 | 28·862 | 54·6 | 51·8 | 2·8 | 1·9 | 0·6 | 15 | | 10·0 | Dark ; drops of rain. |
| | 14 | 854 | 53·1 | 50·2 | 2·9 | 0·5 | 0·5 | 15 | | 8·5 | Scud and cirrous clouds ? |
| | 15 | 848 | 49·7 | 48·1 | 1·6 | 0·4 | 0·1 | 15 | | 3·0 | Id. |
| | 16 | 838 | 48·3 | 46·9 | 1·4 | 0·2 | 0·1 | 17 | | 2·0 | Id. |
| | 17 | 833 | 47·0 | 46·1 | 0·9 | 0·1 | 0·0 | | | 4·0 | Cirro-stratous scud ? drops of rain. |
| | 18 | 831 | 47·3 | 46·6 | 0·7 | 0·0 | 0·0 | 20 | | 10·0 | Scud ; cirro-stratous scud ? rain$^{0\cdot2-0\cdot8}$ since 17h. |
| | 19 | 832 | 49·0 | 48·2 | 0·8 | 0·2 | 0·1 | 16 | 17 : — : — | 10·0 | Id. ; cirrous mass ; cirro-strati ; rain$^{0\cdot5}$ |
| | 20 | 838 | 49·5 | 48·3 | 1·2 | 0·6 | 0·3 | 18 | 18 : 20 : — | 9·5 | Cirri ; cirro-cumuli ; loose scud ; cirro-strati. ⊖ |
| | 21 | 842 | 52·2 | 50·4 | 1·8 | 0·6 | 0·4 | 17 | 18 : 17 : — | 9·8 | Loose scud ; cir.-cum. scud ; cirri ; cir.-str. ; rainbow. ⊖ |
| | 22 | 845 | 51·9 | 49·7 | 2·2 | 1·2 | 0·9 | 17 | 19 : 17 : — | 8·5 | Scud ; cirro-cumulo-strati ; cirri ; cirro-strati. ⊖ |
| | 23 | 864 | 52·6 | 49·0 | 3·6 | 1·3 | 1·0 | 17 | — : 19 : 16 | 9·5 | Cirro-stratous scud ; cir.-cum.-str. ; cirri ; cir.-str. |
| 14 | 0 | 868 | 53·5 | 50·0 | 3·5 | 1·3 | 0·8 | 18 | — : 18 : — | 10·0 | Cirro-cumulous scud ; cirro-strati ; loose cumuli ; scud. |
| | 1 | 868 | 54·0 | 50·4 | 3·6 | 1·2 | 0·4 | 17 | — : 18 : — | 9·9 | Id. ; cirro-strati and cumuli. |
| | 2 | 866 | 55·0 | 49·8 | 5·2 | 1·4 | 0·7 | 18 | 18 : 16 : — | 9·8 | Scud ; cir.-cum.-str. ; cumuli ; cum.-str. ; cir-str. ⊖ |
| | 3 | 857 | 54·0 | 49·8 | 4·2 | 1·2 | 0·3 | 18 | 19 : 16 : — | 7·0 | Id. ; id. ; id. ⊖ |
| | 4 | 847 | 52·3 | 49·0 | 3·3 | 0·3 | 0·1 | 17 | — : — : 16 | 6·0 | Woolly and linear cirri ; cumuli, &c. as before. ⊖ |
| | 5 | 836 | 51·3 | 48·3 | 3·0 | 0·1 | 0·1 | 20 | — : — : 16 | 5·0 | Id. ; id. ; nimbi. ⊖ |
| | 6 | 832 | 49·7 | 47·9 | 1·8 | 0·3 | 0·0 | 20 | 16 : 16 : — | 9·5 | Scud ; nimbi ; cumulo-strati ; rain$^{1-2}$ lately. |
| | 7 | 819 | 48·2 | 47·0 | 1·2 | 0·0 | 0·0 | 4 | | 8·0 | Nearly as before ; rain$^{0\cdot5}$ |
| | 8 | 791 | 47·1 | 46·4 | 0·7 | 0·0 | 0·0 | 6 | | 6·0 | Cirro-strati, &c. ; flash of lightning to SW. |
| | 9 | 772 | 44·0 | 43·8 | 0·2 | 0·1 | 0·0 | 6 | | 2·0 | Id. ; a flash of lightning to SW. at 8h 10m. |
| | 10 | 736 | 44·2 | 43·6 | 0·6 | 0·0 | 0·0 | 6 | | 1·8 | Id. |
| | 11 | 722 | 42·8 | 42·3 | 0·5 | 0·0 | 0·0 | | | 6·0 | Thin clouds ; flash of lightning on WSW. horizon. |
| | 12 | 687 | 44·7 | 44·1 | 0·6 | 0·0 | 0·0 | | | 10·0 | Overcast. |
| | 13 | 28·650 | 46·8 | 46·3 | 0·5 | 0·1 | 0·0 | | | 10·0 | Dark ; drops of rain. |
| | 14 | 639 | 47·6 | 47·0 | 0·6 | 0·1 | 0·0 | | | 10·0 | Rain$^{0\cdot5-2\cdot5}$ since 13h. |
| | 15 | 632 | 46·8 | 46·1 | 0·7 | 0·0 | 0·0 | | | 10·0 | Rain$^{0\cdot5}$ |
| | 16 | 612 | 47·0 | 46·6 | 0·4 | 0·0 | 0·0 | | | 10·0 | Drops of rain. |
| | 17 | 602 | 47·1 | 46·6 | 0·5 | 0·0 | 0·0 | | | 10·0 | Rain$^{0\cdot5}$ |
| | 18 | 596 | 46·0 | 45·6 | 0·4 | 0·1 | 0·0 | | | 10·0 | Rain$^{2}$ |
| | 19 | 596 | 45·7 | 45·2 | 0·5 | 0·1 | 0·1 | 22 | 30 : 0 : — | 10·0 | Scud ; dense cirro-strati ; rain$^{0\cdot5}$ |
| | 20 | 603 | 46·3 | 45·9 | 0·4 | 0·1 | 0·1 | 22 | 30 : — : — | 10·0 | Id. |
| | 21 | 609 | 47·2 | 46·3 | 0·9 | 0·1 | 0·2 | 24 | 30 : — : — | 9·5 | Id. ; dense cirro-strati ; woolly cirri. |
| | 22 | 618 | 48·8 | 46·8 | 2·0 | 0·2 | 0·3 | 24 | — : — : 31 | 8·5 | Woolly cirri ; scud ; cirro-strati round horizon. ● |
| | 23 | 620 | 50·7 | 47·9 | 2·8 | 0·3 | 0·2 | 20 | — : 30 : 0 | 9·5 | Cir.-str. scud ; chiefly lin. and woolly cir. ; solar halo. ⊖ |
| 15 | 0 | 624 | 52·1 | 48·3 | 3·8 | 0·5 | 0·3 | 24 | — : 29 : 0 | 9·5 | As before, with cirrous haze and halo. ⦶ |
| | 1 | 619 | 54·2 | 48·7 | 5·5 | 1·4 | 1·5 | 25 | 29 : — : 0 | 9·0 | Cumuli ; scud ; woolly cirri ; cir. haze ; faint halo. ⊖ |
| | 2 | 619 | 54·0 | 48·7 | 5·3 | 1·3 | 0·6 | 22 | 26 : — : 8 | 8·5 | Scud ; loose cumuli ; woolly cir. ; cir. haze ; solar halo. |
| | 3 | 623 | 52·6 | 47·9 | 4·7 | 0·5 | 0·3 | 24 | | 5·0 | Id. ; id. ; cum. ; cir. ; cir. haze round hor. ⦶ |
| | 4 | 614 | 53·1 | 48·0 | 5·1 | 0·7 | 0·4 | 22 | — : 26 : — | 3·0 | Cirro-stratous scud ; cirri ; sky hazy. ⊙ |
| | 5 | 615 | 52·3 | 47·9 | 4·4 | 0·6 | 0·4 | | — : 26 : — | 3·5 | Id. ; cir.-cum. scud ; cumuli to S. ⊙ |
| | 6 | 612 | 50·3 | 46·1 | 4·2 | 0·6 | 0·5 | 22 | — : 26 : — | 5·0 | Id. ; id. ☽ |
| | 7 | 619 | 49·6 | 45·9 | 3·7 | 0·8 | 0·5 | 22 | — : 26 : — | 7·0 | Id. ; id. |

The direction of the wind is indicated by the number of the point of the compass, reckoning N. = 0, E. = 8, S. = 16, W. = 24. The motions of the three strata of clouds, Sc. (scud), C.-s. (cirro-stratus), and Cir. (cirrus), are indicated in a similar manner.

Oct. 15d 2h. The motion of the cirri is so slow that the direction has been to some extent doubtful ; after considerable watching the motion seems to be from about E.

| Gött. Mean Time. | | Barometer at 32°. | Thermometers. Dry. | Wet. | Diff. | Wind. Maximum force in 1h. | 10m. | From | Clouds, Sc. : C.-s. : Ci., moving from | Sky clouded. | Species of Clouds and Meteorological Remarks. |
|---|---|---|---|---|---|---|---|---|---|---|---|
| d. | h. | in. | ° | ° | ° | lbs. | lbs. | pt. | pt. pt. pt. | 0—10. | |
| 15 | 8 | 28·617 | 49·8 | 46·4 | 3·4 | 0·5 | 0·5 | 21 | | 9·8 | Scud ; cirri above. |
| | 9 | 622 | 49·6 | 46·3 | 3·3 | 0·6 | 0·3 | 22 | | 9·9 | Id. |
| | 10 | 622 | 49·0 | 46·3 | 2·7 | 0·7 | 0·3 | 22 | | 9·5 | Id. |
| | 11 | 630 | 48·0 | 45·0 | 3·0 | 0·5 | 0·2 | 21 | | 9·0 | Id. ; clouds broken. |
| | 12 | 639 | 46·9 | 45·2 | 1·7 | 0·2 | 0·1 | 22 | | 6·0 | Id. ; drops of rain. |
| | 13 | 28·648 | 47·0 | 45·7 | 1·3 | 0·3 | 0·1 | | | 10·0 | Scud ; rain$^{2·0}$ |
| | 14 | 662 | 46·1 | 45·2 | 0·9 | 0·2 | 0·1 | | | 10·0 | Id. ; dark ; rain$^{1·0}$ |
| | 15 | 670 | 46·3 | 45·8 | 0·5 | 0·2 | 0·1 | | | 10·0 | Id. ; rain$^{0·5}$ |
| | 16 | 673 | 45·8 | 45·0 | 0·8 | 0·2 | 0·1 | | | 9·0 | Id. ; clouds broken. |
| | 17 | 679 | 45·0 | 43·8 | 1·2 | 0·1 | 0·2 | 28 | | 7·5 | Id. ; id. |
| | 18 | 689 | 47·2 | 45·0 | 2·2 | 0·3 | 0·4 | 29 | | 8·0 | Id. ; id. |
| | 19 | 704 | 47·0 | 44·8 | 2·2 | 0·4 | 0·2 | 25 | 25 : — : — | 7·0 | Scud and cirro-strati ; cirri. |
| | 20 | 725 | 45·2 | 43·9 | 1·3 | 0·4 | 0·0 | 22 | — : 26 : — | 8·0 | Cirro-stratous scud ; cirro-cumuli ; cirri. ⊖ |
| | 21 | 743 | 48·3 | 46·1 | 2·2 | 0·2 | 0·1 | 22 | — : 30 : — | 9·0 | The same. |
| | 22 | 754 | 49·0 | 46·8 | 2·2 | 0·1 | 0·2 | 22 | — : 30 : — | 6·5 | Cirro-cumulous scud ; loose cirro-cumuli ; scud to S. |
| | 23 | 765 | 50·9 | 47·1 | 3·8 | 0·4 | 0·4 | 28 | | 3·0 | Id. ; loose cum. on N. and S. hor. ⊙ |
| 16 | 0 | 774 | 54·1 | 48·8 | 5·3 | 0·9 | 0·4 | 28 | 29 : — : — | 8·0 | Scud and loose cumuli ; cirro-strati ; cirri. ⊙ |
| | 1 | 769 | 53·7 | 47·5 | 6·2 | 0·8 | 0·7 | 27 | 28 : 28 : — | 3·0 | Id. ; id. ; ⊖ |
| | 2 | 771 | 56·0 | 50·1 | 5·9 | 0·7 | 0·5 | 22 | 28 : — : — | 8·5 | Id. ◐ |
| | 3 | 768 | 54·8 | 48·9 | 5·9 | 1·0 | 0·4 | 22 | 28 : — : — | 9·5 | Id. ; cir.-cum. scud ; cir.-str. ⊖ |
| | 4 | 783 | 51·0 | 48·4 | 2·6 | 1·0 | 0·5 | 28 | 29 : 27 : — | 9·8 | Scud ; dense cirro-stratous scud to S. ; cirro-strati. |
| | 5 | 785 | 50·3 | 46·8 | 3·5 | 0·9 | 0·6 | 28 | 30 : 30 : — | 9·5 | Id. ; cir.-str. scud ; the scud touching the top of Che- |
| | 6 | 808 | 50·2 | 46·2 | 4·0 | 1·3 | 0·7 | 28 | 30 : — : — | 10·0 | Scud ; cirro-strati. [viot. |
| | 7 | 824 | 49·9 | 46·2 | 3·7 | 0·6 | 0·2 | 28 | | 9·9 | Id. ; sky to NW. |
| | 8 | 842 | 49·6 | 46·0 | 3·6 | 0·6 | 0·4 | 26 | | 9·0 | Id. ; id. |
| | 9 | 855 | 48·4 | 45·0 | 3·4 | 0·5 | 0·7 | 28 | | 6·0 | Id. ; stars bright. |
| | 10 | 867 | 46·9 | 43·0 | 3·9 | 0·4 | 0·4 | 28 | | 1·0 | Clouds on E. horizon. |
| | 11 | 878 | 48·0 | 44·6 | 3·4 | 0·7 | 0·6 | 27 | | 8·0 | Scud ; cirro-strati ? sky to W. |
| | 12 | 877 | 48·4 | 44·7 | 3·7 | 1·3 | 0·6 | 28 | | 9·0 | As before. |
| | 13 | 28·885 | 47·8 | 44·3 | 3·5 | 1·5 | 0·6 | 28 | | 4·0 | As before. |
| | 14 | 878 | 48·0 | 44·3 | 3·7 | 1·2 | 0·9 | 28 | | 5·0 | Id. |
| | 15 | 879 | 47·6 | 44·3 | 3·3 | 1·1 | 1·4 | 28 | | 4·5 | Cirrous scud ? shower$^{0·5}$ |
| | 16 | 884 | 48·1 | 44·7 | 3·4 | 1·7 | 1·5 | 29 | | 9·8 | Id. |
| | 17 | 891 | 48·3 | 44·5 | 3·8 | 1·7 | 1·7 | 28 | | 9·0 | Id. |
| | 18 | 890 | 48·8 | 44·6 | 4·2 | 1·9 | 1·7 | 28 | | 9·0 | Scud ; cirrous scud ; shower$^{0·2}$ ; stars dim. |
| | 19 | 913 | 47·0 | 44·3 | 2·7 | 2·2 | 1·7 | 28 | 29 : — : — | 10·0 | Id. ; rain$^{0·5}$ |
| | 20 | 936 | 47·5 | 44·7 | 2·8 | 2·2 | 1·7 | 28 | 30 : — : — | 10·0 | Rain$^{0·5}$ |
| | 21 | 960 | 48·0 | 45·0 | 3·0 | 1·7 | 1·2 | 29 | 31 : — : — | 10·0 | Thick scud. |
| | 22 | 28·995 | 47·7 | 45·4 | 2·3 | 1·5 | 1·3 | 29 | 31 : — : — | 10·0 | Id. ; rain$^{1·5}$ |
| | 23 | 29·017 | 47·7 | 45·5 | 2·2 | 1·8 | 1·3 | 29 | 31 : — : — | 9·9 | Id. ; rain$^{0·2}$ |
| 17 | 0 | 037 | 49·5 | 46·2 | 3·3 | 1·7 | 1·2 | 30 | 0 : — : — | 10·0 | Scud ; cirro-strati. |
| | 1 | 048 | 50·0 | 46·7 | 3·3 | 1·5 | 1·6 | 31 | 0 : — : — | 9·9 | Id. ; id. ; passing showers$^{0·2}$ |
| | 2 | 068 | 50·9 | 46·7 | 4·2 | 1·6 | 0·7 | 29 | 31 : 0 : — | 9·5 | Id. ; cirro-cumulo-strati ; cirro-strati. |
| | 3 | 078 | 51·8 | 46·7 | 5·1 | 1·7 | 1·6 | 30 | 31 : 0 : — | 9·5 | As before. |
| | 4 | 095 | 50·9 | 45·9 | 5·0 | 1·7 | 1·4 | 30 | — : 0 : — | 8·5 | Cir.-cum. scud. ; cirro-strati ; part of a rainbow. ● |
| | 5 | 114 | 48·7 | 45·0 | 3·7 | 1·2 | 0·4 | 29 | — : 0 : — | 4·0 | Cirro-cumuli ; cirro-strati ; haze ; id. ⊙ |
| | 6 | 136 | 47·4 | 44·1 | 3·3 | 1·3 | 0·6 | 29 | — : 0 : — | 6·0 | Cirro-stratous scud ; woolly cirro-strati. |
| | 7 | 154 | 46·6 | 44·1 | 2·5 | 0·9 | 0·7 | 28 | | 4·0 | Scud ; cirro-strati ; lunar corona. ☽ |
| | 8 | 167 | 47·2 | 44·0 | 3·2 | 0·7 | 0·5 | 27 | | 9·9 | Id. ; a few stars visible. |
| | 9 | 189 | 48·1 | 44·5 | 3·6 | 1·1 | 0·4 | 28 | | 10·0 | Scud ? |
| | 10 | 194 | 48·1 | 44·3 | 3·8 | 1·2 | 1·0 | 28 | | 9·9 | Id. |
| | 11 | 209 | 47·7 | 44·0 | 3·7 | 0·9 | 0·3 | 30 | | 9·8 | Id. |
| | 12 | 223 | 46·6 | 43·2 | 3·4 | 1·2 | 0·7 | 28 | | 3·0 | Id. ; in 5m the sky clouded was 8·0. |
| | 13 | 29·242 | 46·7 | 43·2 | 3·5 | 0·6 | 0·2 | 28 | | 9·5 | Scud ? |
| | 14 | 252 | 46·4 | 42·8 | 3·6 | 0·5 | 0·4 | 27 | | 9·9 | Id. |

The direction of the wind is indicated by the number of the point of the compass, reckoning N. = 0, E. = 8, S. = 16, W. = 24. The motions of the three strata of clouds, Sc. (scud), C.-s. (cirro-stratus), and Cir. (cirrus), are indicated in a similar manner.

Oct. 16d 3h 30m. Dense scud and cirro-stratous scud with a slight shower came up suddenly at this time.

Oct. 17d 8h. Observation made at 8h 6m.

| Gött. Mean Time. | | Barometer at 32°. | Thermometers. Dry. | Wet. | Diff. | Wind. Maximum force in 1h. | 10m. | From | Clouds, Sc. : C.-s. : Ci., moving from | Sky clouded. | Species of Clouds and Meteorological Remarks. |
|---|---|---|---|---|---|---|---|---|---|---|---|
| d. | h. | in. | ° | ° | ° | lbs. | lbs. | pt. | pt. pt. pt. | 0—10. | |
| 17 | 15 | 29·267 | 46·0 | 42·7 | 3·3 | 0·6 | 0·3 | 26 | | 9·9 | Scud ? |
| | 16 | 289 | 45·9 | 42·5 | 3·4 | 0·4 | 0·1 | 26 | | 9·9 | Id. |
| | 17 | 299 | 45·8 | 42·3 | 3·5 | 0·5 | 0·3 | 28 | | 10·0 | Id. |
| | 18 | 320 | 45·9 | 42·2 | 3·7 | 0·7 | 0·4 | 29 | | 9·8 | Id. ; sky to NNE. |
| | 19 | 342 | 45·4 | 41·9 | 3·5 | 0·5 | 0·3 | 29 | — : 0 : — | 9·8 | Cirro-stratous scud ; cirro-strati ; scud on Cheviot. |
| | 20 | 370 | 45·2 | 42·0 | 3·2 | 0·6 | 0·2 | 30 | — : 0 : — | 9·2 | As before ; drops of rain ; showers to E. |
| | 21 | 391 | 45·2 | 42·0 | 3·2 | 0·3 | 0·4 | 28 | — : 0 : — | 9·9 | Cir.-str. scud ; cirro-strati ; scud on Cheviot. |
| | 22 | 411 | 46·7 | 42·0 | 4·7 | 0·7 | 0·8 | 29 | 0 : 29 : — | 9·0 | Id. ; loose cum. ; cir.-str. ; scud on Cheviot. |
| | 23 | 427 | 48·1 | 43·9 | 4·2 | 0·8 | 0·6 | 30 | 0 : 28 : — | 4·0 | Id. ; id. ; woolly cirri ; cir.-str. ⊙ |
| 18 | 0 | 442 | 48·3 | 43·3 | 5·0 | 1·2 | 1·0 | 30 | 28 : — : — | 4·0 | Loose cumuli ; cumuli ; cirro-strati. ⊙ |
| | 1 | 461 | 47·5 | 42·8 | 4·7 | 1·2 | 0·4 | 30 | 27 : — : — | 5·5 | Id. ; id. ; id. ● |
| | 2 | 465 | 48·9 | 44·2 | 4·7 | 0·8 | 0·4 | 28 | 28 : 24 : — | 8·5 | Id. ; woolly cirro-strati. ● |
| | 3 | 468 | 48·1 | 43·3 | 4·8 | 0·6 | 0·5 | 28 | 27 : 23 : — | 9·0 | As before ; piles of cumuli on horizon. |
| | 4 | 474 | 47·3 | 42·3 | 5·0 | 0·7 | 0·3 | 28 | 22 : 24 : — | 9·0 | Scud ; loose cum. ; cir.-str. ● |
| | 5 | 479 | 45·8 | 41·4 | 4·4 | 0·2 | 0·2 | 28 | | 9·5 | Id. ; id. ; cum.-str. ; cir.-str. ; rain to W. |
| | 6 | 486 | 43·1 | 40·7 | 2·4 | 0·2 | 0·0 | 22 | 24 : — : — | 7·5 | Id. ☽ |
| | 7 | 494 | 42·9 | 40·0 | 2·9 | 0·1 | 0·0 | | | 9·7 | Id. |
| | 8 | 496 | 41·8 | 39·3 | 2·5 | 0·0 | 0·0 | | | 9·8 | Id. ; cirro-cumulous scud. |
| | 9 | 498 | 37·4 | 36·0 | 1·4 | 0·0 | 0·0 | | | 3·0 | Id. ; id. |
| | 10 | 494 | 34·0 | 33·5 | 0·5 | 0·0 | 0·0 | | | 0·1 | Id. ? |
| | 11 | 491 | 32·2 | 31·8 | 0·4 | 0·1 | 0·1 | | | 0·2 | Cirrous clouds to W. ; haze. |
| | 12 | 483 | 35·3 | 34·2 | 1·1 | 0·1 | 0·1 | | | 6·0 | Scud. |
| | 13 | 29·466 | 32·0 | 31·6 | 0·4 | 0·0 | 0·0 | | | 0·5 | Scud ? haze. |
| | 14 | 458 | 32·3 | 31·7 | 0·6 | 0·2 | 0·1 | 20 | | 0·0 | Very clear. |
| | 15 | 440 | 30·7 | 30·0 | 0·7 | 0·1 | 0·1 | 17 | | 0·0 | Id. |
| | 16 | 420 | 31·7 | 30·9 | 0·8 | 0·1 | 0·1 | 20 | | 0·2 | Haze round horizon. |
| | 17 | 414 | 31·4 | 30·4 | 1·0 | 0·2 | 0·0 | | | 3·0 | Scud. |
| | 18 | 393 | 30·7 | 30·0 | 0·7 | 0·0 | 0·0 | 20 | | 0·5 | Cirri ; cirro-strati to E. |
| | 19 | 358 | 31·0 | 30·2 | 0·8 | 0·0 | 0·0 | 20 | | 7·0 | Scud, cirri, and cirro-strati. |
| | 20 | 335 | 32·7 | 32·2 | 0·5 | 0·0 | 0·0 | 24 | 21 : 21 : — | 9·5 | Thick scud and dense cirro-strati ; rain$^{0\cdot2}$ |
| | 21 | 308 | 37·7 | 37·0 | 0·7 | 0·1 | 0·0 | 8 | 19 : — : — | 10·0 | Loose and cirro-stratous scud ; dense cirro-strati. |
| | 22 | 274 | 39·7 | 38·6 | 1·1 | 0·4 | 0·5 | 16 | 20 : — : — | 10·0 | The same. |
| | 23 | 245 | 41·9 | 40·7 | 1·2 | 0·6 | 0·1 | 16 | 19 : — : — | 10·0 | Id. |
| 19 | 0 | 222 | 44·0 | 42·0 | 2·0 | 0·8 | 0·4 | 20 | 19 : — : — | 10·0 | Thick scud. |
| | 1 | 188 | 47·6 | 44·9 | 2·7 | 2·1 | 0·4 | | 20 : — : — | 9·8 | Id., sky to E. |
| | 2 | 157 | 48·1 | 45·6 | 2·5 | 1·1 | 0·5 | 18 | 22 : — : — | 7·0 | Scud. |
| | 3 | 138 | 50·0 | 45·9 | 4·1 | 1·6 | 1·0 | 19 | 22 : — : — | 2·0 | Id. ; loose cumuli. ⊙ |
| | 4 | 132 | 48·8 | 44·7 | 4·1 | 1·1 | 0·3 | 20 | 22 : — : — | 2·0 | Loose cumuli ; cirro-strati to S. |
| | 5 | 122 | 46·9 | 43·7 | 3·2 | 1·0 | 0·4 | 20 | 23 : — : — | 5·0 | Thick scud ; cirri and cirro-strati to S. ; rain to NE. |
| | 6 | 116 | 42·3 | 40·7 | 1·6 | 1·2 | 0·3 | 20 | 23 : — : — | 3·0 | Id. ; cirro-strati ; at 5h 45m rain$^{2}$ |
| | 7 | 116 | 40·0 | 39·0 | 1·0 | 0·6 | 0·1 | 20 | 23 : — : — | 4·0 | Id. ; id. ☽ |
| | 8 | 114 | 38·0 | 37·0 | 1·0 | 0·1 | 0·1 | 19 | | 0·5 | Clouds on S. and E. horizon. ☽ |
| | 9 | 109 | 39·2 | 37·4 | 1·8 | 0·1 | 0·1 | 20 | | 0·5 | Clouds on S. horizon. ☽ |
| | 10 | 108 | 35·7 | 35·3 | 0·4 | 0·1 | 0·1 | 20 | | 0·7 | Id. ☽ |
| | 11 | 081 | 37·6 | 37·0 | 0·6 | 0·1 | 0·0 | 18 | | 4·0 | Scud ; cir.-str. scud rising from W. ; cirrous haze. |
| | 12 | 071 | 38·8 | 37·2 | 1·6 | 0·2 | 0·2 | 19 | | 9·0 | Id. ; drops of rain ; flash of lightning. |
| | 23 | 29·003 | 45·7 | 44·2 | 1·5 | 0·6 | 0·2 | 20 | — : 22 : — | ... | Sunday—Cloudy, with sunshine ; masses of nimbi ; heavy showers. |
| 20 | 13 | 29·148 | 30·0 | 29·7 | 0·3 | 0·9 | 0·0 | | | 0·2 | Cirro-strati near horizon. ☽ |
| | 14 | 160 | 30·1 | 30·1 | 0·0 | 0·0 | 0·0 | | | 0·3 | Id. ; aurora borealis. |
| | 15 | 171 | 29·1 | ... | ... | 0·0 | 0·0 | | | 0·2 | Id. ; id. |
| | 16 | 193 | 28·2 | 28·1 | 0·1 | 0·0 | 0·0 | | | 0·2 | Id. ; id. |
| | 17 | 215 | 27·6 | 27·6 | 0·0 | 0·1 | 0·0 | | | 0·8 | Id. ; id. |
| | 18 | 235 | 26·6 | 26·4 | 0·2 | 0·1 | 0·0 | | | 2·0 | Scud ; cirro-strati ; id. |
| | 19 | 258 | 30·6 | 30·0 | 0·6 | 0·0 | 0·0 | 17 | | 7·0 | Id. ; cirro-stratous scud. |
| | 20 | 295 | 31·9 | 31·3 | 0·6 | 0·1 | 0·0 | 26 | — : 14 : — | 2·5 | Loose cirro-cumulo-strati ; cirro-strati. ⊙ |

The direction of the wind is indicated by the number of the point of the compass, reckoning N. = 0, E. = 8, S. = 16, W. = 24. The motions of the three strata of clouds, Sc. (scud), C.-s. (cirro-stratus), and Cir. (cirrus), are indicated in a similar manner.

Oct. 19d 10h—11h. Several flashes of lightning seen. A faint flash was seen at 12h 0m, and a bright one at 12h 7m to SW., near the horizon ; at 12h cirrous haze and scud nearly covered the sky.

Oct. 20d 19h 20m. Cirro-cumulous scud moving from E. ; drops of rain : much hoar-frost throughout the night.

| Gött. Mean Time. | Barometer at 32°. | Thermometers. Dry. | Wet. | Diff. | Wind. Maximum force in 1h. | 10m. | From | Clouds, Sc. : C.-s. : Ci., moving from | Sky clouded. | Species of Clouds and Meteorological Remarks. |
|---|---|---|---|---|---|---|---|---|---|---|
| d. h. | in. | ° | ° | ° | lbs. | lbs. | pt. | pt. pt. pt. | 0—10. | |
| 20 21 | 29·316 | 33·4 | 32·7 | 0·7 | 0·1 | 0·0 | 18 | | 0·5 | Cirri ; cirro-strati on horizon. ⊙ |
| 22 | 349 | 36·2 | 35·0 | 1·2 | 0·1 | 0·0 | 25 | | 0·5 | Cirro-cumulo-strati ; cirro-strati to S. ⊙ |
| 23 | 370 | 40·2 | 39·0 | 1·2 | 0·1 | 0·0 | 21 | — : 0 : — | 1·0 | Woolly cirri and cirro-cumuli ; hazy on horizon. ⊙ |
| 21 0 | 380 | 45·0 | 42·9 | 2·1 | 0·1 | 0·0 | 4 | — : 2 : — | 1·0 | Piles of cumuli on N. horizon ; woolly cirro-strati. ⊙ |
| 1 | 397 | 46·7 | 43·7 | 3·0 | 0·2 | 0·0 | 7 | | 2·0 | Id. N. and S. hor. ; cir.-str. ; haze. ⊙ |
| 2 | 417 | 48·2 | 44·9 | 3·3 | 0·1 | 0·0 | 9 | 2 : — : — | 5·0 | Loose cumuli ; cumuli ; cirro-strati ; cumulo-strati. ⊙ |
| 3 | 434 | 48·7 | 45·5 | 3·2 | 0·2 | 0·0 | 2 | — : 3 : — | 8·5 | Cir.-cum.-str. ; cir.-str. ; piles of cumuli to N. |
| 4 | 437 | 48·6 | 45·4 | 3·2 | 0·2 | 0·0 | 2 | 3 : 5 : — | 5·5 | Scud ; cumulo-strati ; hazy and electric clouds to SE. |
| 5 | 469 | 47·2 | 44·8 | 2·4 | 0·2 | 0·0 | 3 | 3 : 5 : — | 6·5 | Nearly as before. |
| 6 | 491 | 45·1 | 42·7 | 2·4 | 0·1 | 0·0 | 2 | 3 : — : — | 8·0 | Id. |
| 7 | 521 | 45·0 | 43·9 | 1·1 | 0·0 | 0·0 | 4 | | 9·0 | Id. ? |
| 8 | 535 | 43·1 | 42·3 | 0·8 | 0·0 | 0·0 | | | 1·0 | Scud ; cumulo-strati. ☽ |
| 9 | 553 | 42·0 | 41·2 | 0·8 | 0·0 | 0·0 | 2 | | 9·0 | Id. ; cirro-cumulous scud. |
| 10 | 567 | 39·8 | 39·5 | 0·3 | 0·0 | 0·0 | | | 7·0 | Id. ; id. |
| 11 | 568 | 40·2 | 39·0 | 1·2 | 0·0 | 0·1 | 1 | | 2·0 | Id. ; id. ☽ |
| 12 | 581 | 41·2 | 40·0 | 1·2 | 0·0 | 0·1 | | | 7·0 | Cirro-cumulo-strati ; scud. |
| 13 | 29·588 | 39·2 | 38·7 | 0·5 | 0·0 | 0·0 | 1 | | 1·5 | Cirro-cumulo-strati ; cirro-strati ; cumuli. ☽ |
| 14 | 595 | 40·0 | 39·0 | 1·0 | 0·2 | 0·2 | 1 | | 0·8 | Cumuli ; cirro-strati on SE. horizon. ☽ |
| 15 | 599 | 38·2 | 37·6 | 0·6 | 0·2 | 0·3 | 1 | | 0·5 | Id. ; id. |
| 16 | 608 | 40·0 | 39·2 | 0·8 | 0·5 | 0·2 | 30 | | 1·0 | Clouds to E. |
| 17 | 613 | 36·8 | 36·3 | 0·5 | 0·2 | 0·1 | | | 0·5 | Clouds on E. horizon. |
| 18 | 611 | 36·2 | 35·0 | 1·2 | 0·0 | 0·0 | | | 0·5 | Bank of clouds on E. horizon. |
| 19 | 616 | 37·0 | 36·4 | 0·6 | 0·0 | 0·0 | 24 | | 2·5 | Scud to SE. |
| 20 | 634 | 36·8 | 36·1 | 0·7 | 0·0 | 0·0 | 24 v. | 8 : — : — | 7·0 | Scud ; cirro-cumulous scud. |
| 21 | 652 | 39·5 | 38·8 | 0·7 | 0·1 | 0·0 | 18 | 4 : — : — | 9·2 | The same. |
| 22 | 648 | 43·5 | 42·1 | 1·4 | 0·0 | 0·0 | 18 | 4 : — : — | 8·0 | Id. |
| 23 | 650 | 45·1 | 42·9 | 2·2 | 0·0 | 0·0 | 30 | 4 : — : — | 3·0 | Id. ⊙ |
| 22 0 | 647 | 45·3 | 43·3 | 2·0 | 0·1 | 0·0 | 28 | | 1·0 | Scud and cirro-strati on horizon ; patches of cirri. ⊙ |
| 1 | 637 | 47·2 | 44·7 | 2·5 | 0·1 | 0·0 | 16 v. | | 1·0 | Loose cumuli ; cirro-stratous scud near horizon. ⊙ |
| 2 | 630 | 48·4 | 45·6 | 2·8 | 0·1 | 0·1 | 14 | 30 : — : — | 2·0 | Id. ⊙ |
| 3 | 622 | 49·7 | 46·0 | 3·7 | 0·1 | 0·0 | 12 | 28 : — : — | 1·5 | Id. ; patches of cirri. ⊙ |
| 4 | 618 | 48·2 | 45·0 | 3·2 | 0·1 | 0·0 | 14 | 20 : — : — | 0·5 | Id. ; id. ⊙ |
| 5 | 620 | 43·9 | 42·4 | 1·5 | 0·1 | 0·0 | 20 | | 0·5 | Scud ; cumuli and haze on horizon ; light cirri. ⊙ |
| 6 | 635 | 39·8 | 39·0 | 0·8 | 0·1 | 0·1 | 20 | — : 22 : — | 8·0 | Cirro-cumulo-strati ; cirri ; cirro-strati. |
| 7 | 650 | 37·7 | 37·0 | 0·7 | 0·1 | 0·1 | 17 | | 0·8 | Woolly cirri ; cirro-strati. ☽ |
| 8 | 653 | 37·3 | 36·8 | 0·5 | 0·1 | 0·1 | 18 | | 0·0 | Quite clear. ☽ |
| 9 | 648 | 34·7 | 34·2 | 0·5 | 0·1 | 0·0 | | | 0·0 | Id. ☽ |
| 10 | 650 | 31·6 | 31·3 | 0·3 | 0·0 | 0·0 | | | 0·2 | Woolly cirri to S. ☽ |
| 11 | 646 | 31·1 | 30·8 | 0·3 | 0·0 | 0·0 | 18 | | 0·0 | Faint lunar corona. ☽ |
| 12 | 645 | 30·7 | 30·3 | 0·4 | 0·0 | 0·0 | 18 | — : 22 : — | 5·5 | Loose cirro-cumulo-strati. ☽ |
| 13 | 29·644 | 31·3 | 31·0 | 0·3 | 0·0 | 0·0 | 18 | — : 22 : — | 9·0 | Loose cirro-cumulo-strati. |
| 14 | 636 | 29·3 | 29·0 | 0·3 | 0·0 | 0·0 | 20 | | 0·0 | Heavy dew ; hoar-frost. ☽ |
| 15 | 636 | 28·0 | 28·0 | 0·0 | 0·1 | 0·0 | 30 | | 0·5 | Cirro-cumulo-strati to E. ☽ |
| 16 | 629 | 28·0 | 27·9 | 0·1 | 0·0 | 0·0 | 24 | | 0·5 | Id. |
| 17 | 628 | 28·7 | 28·7 | 0·0 | 0·1 | 0·0 | 20 | | 0·8 | Id. ? |
| 18 | 636 | 26·8 | 26·8 | 0·0 | 0·0 | 0·0 | 26 | | 0·8 | Id. |
| 19 | 636 | 25·7 | ... | ... | 0·0 | 0·0 | 25 | | 0·5 | Cirri to E. ; patch of scud to SE. |
| 20 | 646 | 26·3 | ... | ... | 0·0 | 0·0 | 23 | | 0·2 | Patches of scud to N. ⊙ |
| 21 | 641 | 30·7 | 30·1 | 0·6 | 0·0 | 0·0 | | — : 20 : — | 4·0 | Cirro-cumulous scud ; cirro-strati. ⊙ |
| 22 | 646 | 33·3 | 32·0 | 1·3 | 0·1 | 0·0 | 17 | | 2·0 | Cirri ; patches of scud to S. ⊙ |
| 23 | 651 | 37·7 | 36·9 | 0·8 | 0·1 | 0·0 | 16 | 19 : — : — | 4·0 | Loose cumuli ; linear cirri ; cirro-strati. ● |
| 23 0 | 646 | 42·0 | 41·2 | 0·8 | 0·0 | 0·0 | 17 | 20 : — : — | 5·0 | Id. ; cirri ; cirro-strati. ◐ |
| 1 | 635 | 49·3 | 45·9 | 3·4 | 0·4 | 0·4 | 18 | 20 : — : — | 5·0 | Id. ; id. ; id. ◐ |
| 2 | 620 | 50·7 | 46·9 | 3·8 | 0·3 | 0·3 | 19 | 21 : — : — | 5·0 | Id. ; cumuli ; cirri ; cirro-strati. ◐ |
| 3 | 614 | 52·0 | 46·7 | 5·3 | 0·4 | 0·4 | 21 | 21 : 21 : — | 6·0 | Scud ; loose cumuli ; cirro-cumuli. ⊖ |
| 4 | 614 | 49·2 | 45·7 | 3·5 | 0·2 | 0·0 | 18 | 21 : 21 : — | 3·5 | Id. ; id. ; id. ⊙ |

The direction of the wind is indicated by the number of the point of the compass, reckoning N. = 0, E. = 8, S. = 16, W. = 24. The motions of the three strata of clouds, Sc. (scud), C.-s. (cirro-stratus), and Cir. (cirrus), are indicated in a similar manner.

| Gött. Mean Time. | | Barometer at 32°. | Thermometers. Dry. | Wet. | Diff. | Wind. Maximum force in 1h. | 10m. | From | Clouds, Sc. : C.-s. : Ci., moving from | Sky clouded. | Species of Clouds and Meteorological Remarks. |
|---|---|---|---|---|---|---|---|---|---|---|---|
| d. | h. | in. | ° | ° | ° | lbs. | lbs. | pt. | pt. pt. pt. | 0—10. | |
| 23 | 5 | 29·615 | 45·0 | 43·2 | 1·8 | 0·1 | 0·0 | 19 | 22 : — : — | 8·0 | Thick scud ; fine cirri ; cirro-strati ; cumuli. ☽ |
| | 6 | 615 | 42·1 | 40·7 | 1·4 | 0·1 | 0·0 | 18 | 21 : — : — | 7·0 | Loose cirro-cumulo-strati ; fibrous cirri. |
| | 7 | 620 | 40·5 | 39·6 | 0·9 | 0·1 | 0·0 | 6 | 21 : — : — | 8·0 | Id. ☽ |
| | 8 | 618 | 38·7 | 37·9 | 0·8 | 0·1 | 0·0 | 30 | | 1·5 | Id. ☽ |
| | 9 | 625 | 35·4 | 34·9 | 0·5 | 0·1 | 0·0 | 22 | | 0·5 | Id. ? ☽ |
| | 10 | 632 | 35·2 | 34·9 | 0·3 | 0·1 | 0·0 | 18 | | 8·5 | Cirro-cumulo-strati ; corona round Moon. ☽ |
| | 11 | 636 | 34·8 | 34·3 | 0·5 | 0·0 | 0·0 | 8 | | 3·0 | Id. ☽ |
| | 12 | 631 | 32·0 | 31·7 | 0·3 | 0·0 | 0·0 | 24 | | 0·0 | Hazy on horizon. ☽ |
| | 13 | 29·630 | 30·4 | 30·0 | 0·4 | 0·0 | 0·0 | 20 | | 0·0 | Hazy on horizon. ☽ |
| | 14 | 625 | 30·2 | ... | ... | 0·0 | 0·0 | | | 0·0 | ☽ |
| | 15 | 615 | 28·2 | ... | ... | 0·0 | 0·0 | | | 0·5 | ☽ |
| | 16 | 608 | 28·4 | ... | ... | 0·0 | 0·0 | | | ... | ☽ |
| | 17 | 608 | 30·1 | 30·0 | 0·1 | 0·0 | 0·0 | 20 | | 6·0 | Cirro-cumuli ; cirro-cumulo-strati ; haze on horizon. ♃ |
| | 18 | 610 | 27·7 | ... | ... | 0·0 | 0·0 | | | 2·0 | Cirro-strati ; haze round horizon. |
| | 19 | 622 | 28·4 | 28·1 | 0·3 | 0·0 | 0·0 | 18 | | 3·0 | Id. ; id. |
| | 20 | 630 | 27·7 | ... | ... | 0·0 | 0·0 | | | 0·5 | Id. ; id. ◐ |
| | 21 | 640 | 29·0 | ... | ... | 0·0 | 0·0 | 18 | | 0·3 | Cirri ; thick haze round horizon. ⊙ |
| | 22 | 654 | 32·6 | 31·8 | 0·8 | 0·0 | 0·0 | 20 | | 0·3 | As before. ⊙ |
| | 23 | 654 | 36·2 | 34·7 | 1·5 | 0·0 | 0·0 | 20 | — : 19 : — | 1·5 | Cirro-cumuli ; cirro-strati ; cirri ; very hazy on hor. ⊙ |
| 24 | 0 | 664 | 40·7 | 39·3 | 1·4 | 0·0 | 0·0 | 10 | — : 19 : — | 8·0 | Id. ; id. ; very hazy on horizon. ⊙ |
| | 1 | 648 | 45·0 | 42·6 | 2·4 | 0·0 | 0·0 | 11 | — : 19 : — | 8·5 | Id. ; woolly cirri ; cir. haze ; hazy on hor. ◐ |
| | 2 | 654 | 48·2 | 44·8 | 3·4 | 0·1 | 0·1 | 30 | — : 18 : — | 8·5 | Id. ; cirrous haze ; hazy on horizon. ◐ |
| | 3 | 657 | 49·2 | 45·3 | 3·9 | 0·0 | 0·0 | 18 | — : 18 : — | 9·0 | As before ; cirro-strati ; solar halo. ◐ |
| | 4 | 654 | 48·7 | 45·3 | 3·4 | 0·2 | 0·1 | 7 | — : 17 : — | 9·0 | Cirri ; cirro-strati ; cirrous haze. |
| | 5 | 659 | 44·3 | 42·7 | 1·6 | 0·2 | 0·0 | 18 | | 9·0 | As before. |
| | 6 | 665 | 38·3 | 37·9 | 0·4 | 0·0 | 0·0 | 18 | | 9·0 ? | Cirri ; cirrous and atmospheric haze. ♃ |
| | 7 | 677 | 35·7 | 35·3 | 0·4 | 0·0 | 0·0 | 17 | | 7·0 | Thin cirrous haze over the sky ; faint lunar halo ♃♃ |
| | 8 | 698 | 35·9 | 35·4 | 0·5 | 0·0 | 0·0 | 18 | | 9·5 | Cirri ; cirro-strati ; cirrous haze. ♃♃ |
| | 9 | 704 | 38·9 | 38·2 | 0·7 | 0·0 | 0·0 | | | 10·0 | Dense cirrous clouds and haze. |
| | 10 | 706 | 38·6 | 38·0 | 0·6 | 0·0 | 0·0 | 18 | | 10·0 | The same. |
| | 11 | 724 | 38·8 | 38·2 | 0·6 | 0·1 | 0·0 | 18 | | 10·0 | Id. |
| | 12 | 718 | 37·9 | 37·3 | 0·6 | 0·0 | 0·0 | 17 | | 10·0 | Id. |
| | 13 | 29·727 | 39·2 | 38·9 | 0·3 | 0·0 | 0·0 | 18 | | 10·0 | The same. |
| | 14 | 726 | 39·3 | 39·0 | 0·3 | 0·1 | 0·0 | 17 | | 10·0 | Id. |
| | 15 | 738 | 39·2 | 39·0 | 0·2 | 0·0 | 0·0 | 24 | | 10·0 | Id. |
| | 16 | 727 | 39·1 | 38·8 | 0·3 | 0·0 | 0·0 | 18 | | 10·0 | Id. |
| | 17 | 732 | 40·0 | 39·7 | 0·3 | 0·0 | 0·0 | 18 | | 10·0 | Id. |
| | 18 | 741 | 41·3 | 41·0 | 0·3 | 0·1 | 0·0 | 24 | | 10·0 | Id. ; rain[1] |
| | 19 | 739 | 42·0 | 41·6 | 0·4 | 0·0 | 0·0 | 24 | | 10·0 | Cirro-stratous scud ; cirro-strati ; mist ; rain[1] |
| | 20 | 749 | 42·5 | 42·2 | 0·3 | 0·0 | 0·0 | 30 | 2 : — : — | 9·5 | Thick scud ; cirro-cumuli ; cirro-strati ; strati. |
| | 21 | 767 | 43·3 | 43·0 | 0·3 | 0·1 | 0·1 | 30 | 2 : 15 : — | 9·8 | Scud ; cir.-cum. scud ; cir.-cum. ; cirro-strati ; strati. |
| | 22 | 770 | 46·4 | 45·6 | 0·8 | 0·0 | 0·0 | 26 | 2 : 2 : — | 9·8 | Cir.-str. scud ; cirro-cumuli ; cirro-cumulo-strati. ● |
| | 23 | 774 | 49·0 | 47·1 | 1·9 | 0·3 | 0·3 | 2 | 2 : 2 : — | 9·9 | Scud ; cirro-cumulous scud ; cirro-strati. |
| 25 | 0 | 777 | 49·2 | 47·0 | 2·2 | 0·4 | 0·3 | 1 | 2 : — : — | 10·0 | Id. ; cirro-strati ; cirrous haze. |
| | 1 | 784 | 48·3 | 45·9 | 2·4 | 0·4 | 0·1 | 2 | 2 : — : — | 10·0 | Scud and dense cirro-strati ; drops of rain. |
| | 2 | 783 | 49·2 | 46·4 | 2·8 | 0·6 | 0·3 | 1 | 2 : — : — | 9·6 | Thick scud ; cirro-cumulous scud ; rain to W. ◐ |
| | 3 | 778 | 49·3 | 47·2 | 2·1 | 0·5 | 0·4 | 2 | 2 : 8 : — | 8·0 | Scud ; cumuli ; cirro cumuli moving very slowly. ◐ |
| | 4 | 776 | 49·3 | 46·7 | 2·6 | 0·5 | 0·6 | 1 | 2 : 10 : — | 10·0 | Id. ; cirro-cumulo-strati ; cirro-strati. |
| | 5 | 780 | 45·6 | 44·1 | 1·5 | 1·2 | 0·1 | 2 | 4 : — : — | 10·0 | Id. ; cirro-strati. |
| | 6 | 785 | 46·4 | 45·2 | 1·2 | 0·1 | 0·2 | 0 | | 10·0 | Id. |
| | 7 | 788 | 47·0 | 45·3 | 1·7 | 0·1 | 0·1 | 4 | | 10·0 | Id. |
| | 8 | 792 | 47·1 | 45·3 | 1·8 | 0·2 | 0·1 | 2 | | 10·0 | Id. ; passing showers[1] |
| | 9 | 802 | 46·7 | 44·9 | 1·8 | 0·1 | 0·1 | 0 | | 10·0 | Id. ☽ |
| | 10 | 806 | 46·2 | 44·9 | 1·3 | 0·2 | 0·1 | 0 | | 10·0 | Id. ; rain[0·5] ☽ |
| | 11 | 814 | 46·2 | 45·0 | 1·2 | 0·2 | 0·0 | 1 | 4 : — : — | 10·0 | Id. ; homogeneous cirro-strati ; rain[0·2] ☽ |
| | 12 | 823 | 46·0 | 44·8 | 1·2 | 0·2 | 0·1 | 2 | 4 : — : — | 10·0 | As before ; rain[1-0·2] ☽ |

The direction of the wind is indicated by the number of the point of the compass, reckoning N. = 0, E. = 8, S. = 16, W. = 24. The motions of the three strata of clouds, Sc. (scud), C.-s. (cirro-stratus), and Cir. (cirrus), are indicated in a similar manner.

| Gött. Mean Time. | Barometer at 32°. | Thermometers. Dry. | Wet. | Diff. | Wind. Maximum force in 1h. | 10m. | From | Clouds, Sc. : C.-s. : Ci., moving from | Sky clouded. | Species of Clouds and Meteorological Remarks. |
|---|---|---|---|---|---|---|---|---|---|---|
| d. h. | in. | ° | ° | ° | lbs. | lbs. | pt. | pt. pt. pt. | 0—10. | |
| 25 13 | 29·825 | 45·7 | 44·7 | 1·0 | 0·3 | 0·2 | 1 | 4 : — : — | 10·0 | As before ; rain0·5 ☂ |
| 14 | 826 | 46·1 | 45·0 | 1·1 | 0·3 | 0·2 | 2 | | 10·0 | Homogeneous cirro-strati ; rain0·2 ☽ |
| 15 | 830 | 46·1 | 45·1 | 1·0 | 0·3 | 0·1 | 2 | | 10·0 | Id. ; id. ☽ |
| 16 | 833 | 46·3 | 45·4 | 0·9 | 0·2 | 0·2 | 3 | 4 : — : — | 10·0 | Scud ; homogeneous cirro-strati ; rain0·2 ☽ |
| 17 | 840 | 45·9 | 44·9 | 1·0 | 0·3 | 0·1 | 3 | 4 : — : — | 10·0 | Id. ; cirrous haze ; lunar halo ; stars in zenith. ☂ |
| 18 | 849 | 45·9 | 44·9 | 1·0 | 0·1 | 0·0 | 4 | 4 : — : — | 9·0 | Loose scud ; cir. haze ; lunar halo and corona ; rain0·2 ☂ |
| 19 | 867 | 46·3 | 45·0 | 1·3 | 0·2 | 0·2 | 4 | 4 : — : — | 10·0 | Id. ; id. |
| 20 | 889 | 47·0 | 45·4 | 1·6 | 0·3 | 0·2 | 2 | 4 : — : — | 9·5 | Id. ; cirri ; cirrous haze ; scud on Cheviot. |
| 21 | 904 | 47·0 | 45·3 | 1·7 | 0·1 | 0·0 | 4 | 3 : — : — | 10·0 | Thick scud ; dense cirro-strati. |
| 22 | 917 | 48·8 | 46·4 | 2·4 | 0·3 | 0·2 | 2 | 4 : — : — | 9·5 | Scud ; loose cumuli ; cirri. |
| 23 | 932 | 50·0 | 47·0 | 3·0 | 0·7 | 0·9 | 2 | | 8·5 | Id. ; id. ; thin cirri over the sky. ⊖ |
| 26 0 | 931 | 50·2 | 47·0 | 3·2 | 0·7 | 0·4 | 2 | 3 : — : — | 10·0 | Id. ; cirrous mass. |
| 1 | 952 | 49·5 | 46·2 | 3·3 | 0·8 | 0·4 | 3 | 4 : — : — | 9·5 | Id. ; loose cumuli ; cirro-strati. |
| 2 | 972 | 49·2 | 45·5 | 3·7 | 0·9 | 0·8 | 2 | 4 : — : — | 9·9 | Id. ; cirro-strati. |
| 3 | 980 | 49·0 | 43·8 | 5·2 | 0·9 | 0·9 | 2 | 3 : — : — | 9·9 | Id. ; loose cumuli ; cirri ; cirro-strati. |
| 4 | 994 | 47·3 | 43·3 | 4·0 | 0·7 | 0·4 | 4 | — : 3 : — | 7·0 | Cirro-stratous scud ; id. ; id. |
| 5 | 29·999 | 47·0 | 43·2 | 3·8 | 0·4 | 0·2 | 2 | — : 3 : — | 9·5 | Cirro-cumulo-strati ; cirro-strati. |
| 6 | 30·018 | 46·2 | 42·9 | 3·3 | 0·4 | 0·3 | 2 | — : 3 : — | 9·5 | Cirro-stratous scud. |
| 7 | 026 | 45·0 | 41·4 | 3·6 | 0·7 | 0·2 | 2 | — : 4 : — | 3·5 | Id. ☂ |
| 8 | 034 | 44·3 | 41·5 | 2·8 | 0·3 | 0·1 | 3 | — : 4 : — | 8·2 | Id. |
| 9 | 047 | 45·6 | 42·7 | 2·9 | 0·2 | 0·1 | 2 | | 10·0 | Id. |
| 10 | 052 | 46·4 | 43·0 | 3·4 | 0·1 | 0·0 | 3 | | 10·0 | Id. |
| 11 | 057 | 46·4 | 43·0 | 3·4 | 0·2 | 0·0 | 6 | | 10·0 | Id. |
| 12 | 066 | 46·2 | 43·2 | 3·0 | 0·1 | 0·1 | 4 | — : 5 : — | 9·9 | Id. ☽ |
| 27 0 | 30·149 | 46·0 | 42·1 | 3·9 | 0·6 | 0·4 | 4 | — : 4 : — | ..... | Sunday—Cloudy, principally cirro-stratous scud. |
| 13 | 30·127 | 34·2 | 34·0 | 0·2 | 0·7 | 0·0 | 20 | | 0·0 | Hazy on horizon. ☽ |
| 14 | 118 | 33·7 | 33·5 | 0·2 | 0·0 | 0·1 | 1 | — : 6 : — | 4·0 | Cirro-cumulo-strati ; cirro-strati. ☽ |
| 15 | 107 | 32·8 | 32·5 | 0·3 | 0·0 | 0·0 | 20 | | 0·2 | Cirro-cumulo-strati to S. ; cirro-strati to N. ☽ |
| 16 | 104 | 31·2 | 31·0 | 0·2 | 0·0 | 0·0 | 20 | — : 6 : — | 9·9 | Large cirro-cumulo-strati. ☽ |
| 17 | 104 | 34·7 | 34·2 | 0·5 | 0·0 | 0·0 | 20 | 6 : — : — | 8·5 | Scud and loose cumuli. ☂ |
| 18 | 098 | 34·0 | 33·8 | 0·2 | 0·0 | 0·0 | 20 | 6 : — : — | 9·0 | Id. ☂ |
| 19 | 083 | 35·0 | 34·6 | 0·4 | 0·0 | 0·0 | 14 | 6 : — : — | 9·5 | Scud. ☽ |
| 20 | 094 | 35·0 | 34·7 | 0·3 | 0·0 | 0·0 | 28 | 5 : — : — | 9·0 | Id. [from it. |
| 21 | 108 | 37·9 | 37·3 | 0·6 | 0·0 | 0·0 | 20 | 7 : 5 : — | 9·5 | Id. ; cirro-stratous scud, with fibrous masses hanging |
| 22 | 098 | 40·3 | 39·6 | 0·7 | 0·0 | 0·0 | 20 | 6 : — : — | 9·9 | Id. |
| 23 | 096 | 43·1 | 42·0 | 1·1 | 0·0 | 0·0 | 22 | 7 : — : 26 | 6·0 | Id. ; thin cirri. ⊙ |
| 28 0 | 080 | 45·0 | 43·4 | 1·6 | 0·0 | 0·0 | 4 | — : 7 : — | 9·9 | Cirro-stratous scud. |
| 1 | 067 | 46·7 | 44·7 | 2·0 | 0·4 | 0·3 | 7 | — : 7 : — | 9·8 | Id. ; cirri. |
| 2 | 061 | 46·7 | 44·9 | 1·8 | 0·8 | 0·3 | 6 | — : 8 : — | 9·9 | Id. ; id. |
| 3 | 052 | 46·8 | 45·1 | 1·7 | 0·7 | 0·5 | 10 | — : 8 : — | 9·9 | Id. ; rainbow at 2h 50m. |
| 4 | 032 | 47·3 | 45·0 | 2·3 | 0·5 | 0·4 | 8 | — : 10 : — | 9·9 | Id. ; cirri. |
| 5 | 031 | 46·5 | 44·7 | 1·8 | 0·6 | 0·1 | 8 | — : 9 : — | 9·9 | Id. ; id. |
| 6 | 057 | 46·0 | 44·6 | 1·4 | 0·3 | 0·3 | 7 | | 10·0 | Id. |
| 7 | 040 | 45·8 | 44·5 | 1·3 | 0·2 | 0·1 | 8 | | 10·0 | Id. |
| 8 | 027 | 45·2 | 44·4 | 0·8 | 0·2 | 0·1 | 8 | | 10·0 | Id. |
| 9 | 024 | 45·8 | 44·8 | 1·0 | 0·2 | 0·2 | 8 | | 9·5 | Scud ; cirro-cumulo-strati. ☽ |
| 10 | 026 | 45·3 | 44·7 | 0·6 | 0·2 | 0·2 | 8 | 7 : — : — | 9·9 | Id. ; cirro-strati ; lunar corona. ☽ |
| 11 | 030 | 45·3 | 44·7 | 0·6 | 0·1 | 0·1 | 6 | — : 8 : — | 9·8 | Cir.-str. scud ; cirri ; light drops of rain. ☽ |
| 12 | 020 | 45·1 | 44·7 | 0·4 | 0·1 | 0·0 | 6 | — : 9 : — | 8·0 | Id. ; cirri radiating from SE. ; lunar corona. ☂ |
| 13 | 30·010 | 45·2 | 44·9 | 0·3 | 0·1 | 0·0 | 6 | | 10·0 | Misty scud ; rain0·2 |
| 14 | 29·996 | 45·7 | 45·0 | 0·7 | 0·1 | 0·1 | 6 | | 10·0 | Id. |
| 15 | 997 | 44·7 | 44·4 | 0·3 | 0·1 | 0·0 | 6 v. | 9 : — : — | 9·2 | Scud ; rain since last hour. |
| 16 | 991 | 44·4 | 43·8 | 0·6 | 0·1 | 0·0 | 6 | — : 10 : — | 9·2 | Cirro-stratous scud ? ☂ |
| 17 | 984 | 42·4 | 41·8 | 0·6 | 0·1 | 0·0 | 4 | 11 : — : 12 | 1·8 | Patches of scud ; cirri as at 12h ; faint lunar corona. ☽ |
| 18 | 969 | 37·9 | 37·7 | 0·2 | 0·0 | 0·0 | 20 | | 1·5 | Linear cirri ; lunar corona. ☽ |

The direction of the wind is indicated by the number of the point of the compass, reckoning N. = 0, E. = 8, S. = 16, W. = 24. The motions of the three strata of clouds, Sc. (scud), C.-s. (cirro-stratus), and Cir. (cirrus), are indicated in a similar manner.

Oct. 27d 23h 30m. About this time a dense mass of thick wavy cirro-stratus and cirro-stratous scud came up from E.

| Gött. Mean Time. | | Barometer at 32°. | Thermometers. Dry. | Wet. | Diff. | Wind. Maximum force in 1h. | 10m. | From | Clouds, Sc. : C.-s. : Ci., moving from | Sky clouded. | Species of Clouds and Meteorological Remarks. |
|---|---|---|---|---|---|---|---|---|---|---|---|
| d. | h. | in. | ° | ° | ° | lbs. | lbs. | pt. | pt. pt. pt. | 0—10. | |
| 28 | 19 | 29·965 | 38·9 | 38·4 | 0·5 | 0·0 | 0·0 | 8 | | 3·0 | Scud on horizon; linear cirri; lunar corona. ☽ |
| | 20 | 976 | 37·4 | 37·2 | 0·2 | 0·0 | 0·1 | 4 | | 5·0 | Id.; woolly and linear cirri. |
| | 21 | 965 | 39·7 | 39·3 | 0·4 | 0·0 | 0·0 | 4 | — : 10 : — | 10·0 | Dense cirro-stratous scud. |
| | 22 | 957 | 42·2 | 41·7 | 0·5 | 0·0 | 0·1 | 2 | — : 10 : — | 10·0 | Id.; loose cumuli. |
| | 23 | 950 | 44·2 | 43·7 | 0·5 | 0·1 | 0·1 | 4 | — : 10 : — | 9·9 | Id.; foggy. ● |
| 29 | 0 | 939 | 48·1 | 46·7 | 1·4 | 0·3 | 0·2 | 4 | 11 : — : — | 10·0 | Scud; dense cirro-strati. |
| | 1 | 918 | 49·4 | 46·7 | 2·7 | 0·7 | 0·3 | 8 | 11 : — : — | 10·0 | As before. |
| | 2 | 902 | 49·2 | 45·9 | 3·3 | 0·6 | 0·3 | 10 | 11 : — : — | 9·9 | Scud; cirri; cirro-strati. |
| | 3 | 893 | 49·0 | 46·0 | 3·0 | 0·6 | 0·6 | 12 | 11 : — : — | 10·0 | Cirro-stratous scud; heavy rain to E. |
| | 4 | 867 | 48·2 | 45·3 | 2·9 | 0·5 | 0·4 | 9 | — : 11 : 16 | 9·0 | Id.; woolly cirri; cirro-strati. |
| | 5 | 852 | 47·0 | 44·5 | 2·5 | 0·5 | 0·5 | 8 | — : 11 : 17 | 8·5 | Id.; id.; id. |
| | 6 | 843 | 46·5 | 44·2 | 2·3 | 0·4 | 0·3 | 9 v. | | 10·0 | As before. |
| | 7 | 841 | 44·7 | 43·0 | 1·7 | 0·3 | 0·1 | 9 | | 8·0 | Cirro-strati; cirri; cirrous haze; stars faint. |
| | 8 | 835 | 45·5 | 43·8 | 1·7 | 0·1 | 0·1 | 8 v. | | 9·8 | As before. |
| | 9 | 826 | 46·4 | 44·7 | 1·7 | 0·1 | 0·0 | 8 | | 10·0 | Scud? cirro-stati; cirri. |
| | 10 | 807 | 45·9 | 44·4 | 1·5 | 0·1 | 0·0 | 8 | | 10·0 | Id.; id. |
| | 11 | 788 | 47·0 | 44·9 | 2·1 | 0·3 | 0·3 | 10 | | 10·0 | Scud and cirro-strati. |
| | 12 | 774 | 47·9 | 45·4 | 2·5 | 0·6 | 0·2 | 10 | | 10·0 | The same. |
| | 13 | 29·755 | 47·9 | 45·4 | 2·5 | 0·3 | 0·3 | 10 | | 10·0 | The same. |
| | 14 | 741 | 47·5 | 45·2 | 2·3 | 0·5 | 0·4 | 10 | 12 : — : — | 10·0 | Id. ☽ |
| | 15 | 728 | 47·5 | 45·1 | 2·4 | 0·7 | 0·4 | 9 | | 10·0 | Id. ☽ |
| | 16 | 710 | 47·7 | 45·7 | 2·0 | 0·5 | 0·2 | 10 | | 10·0 | Id. |
| | 17 | 693 | 47·5 | 45·5 | 2·0 | 0·7 | 0·2 | 15 | | 10·0 | Id. |
| | 18 | 691 | 47·6 | 44·9 | 2·7 | 0·4 | 0·3 | 15 | 12 : — : — | 10·0 | Scud; cirro-strati above. ☽ |
| | 19 | 685 | 48·0 | 45·3 | 2·7 | 0·5 | 0·3 | 15 | 12 : — : — | 10·0 | Id. |
| | 20 | 679 | 47·7 | 45·7 | 2·0 | 0·3 | 0·2 | 12 | 12 : — : — | 10·0 | Id.; homogeneous cirro-strati; rain0·2 |
| | 21 | 685 | 48·2 | 45·9 | 2·3 | 0·7 | 0·5 | 11 | 12 : — : — | 10·0 | Id.; id. |
| | 22 | 680 | 48·4 | 46·1 | 2·3 | 1·1 | 1·5 | 13 | 12 : — : — | 10·0 | Id.; id. |
| | 23 | 683 | 48·7 | 46·0 | 2·7 | 1·7 | 1·0 | 12 | 12 : — : — | 10·0 | Id.; id. |
| 30 | 0 | 680 | 49·0 | 46·2 | 2·8 | 1·3 | 0·6 | 12 | 12 : — : — | 10·0 | Id.; rain to E. |
| | 1 | 664 | 49·1 | 46·3 | 2·8 | 0·8 | 0·5 | 12 | 11 : — : — | 10·0 | Id. |
| | 2 | 647 | 49·3 | 46·4 | 2·9 | 0·6 | 0·8 | 12 | 11 : — : — | 10·0 | Id.; cirro-strati. |
| | 3 | 646 | 49·8 | 46·9 | 2·9 | 0·4 | 0·4 | 12 | 12 : — : — | 10·0 | Id.; id. |
| | 4 | 643 | 49·2 | 46·8 | 2·4 | 0·6 | 0·4 | 14 | 12 : — : — | 10·0 | Thick scud; cumuli; cirro-strati; cirrous haze. |
| | 5 | 646 | 48·4 | 46·2 | 2·2 | 0·4 | 0·2 | 13 | 12 : — : — | 10·0 | As before. |
| | 6 | 649 | 48·0 | 45·0 | 3·0 | 0·4 | 0·3 | 12 | | 9·7 | Cirro-strati and cirro-cumuli. |
| | 7 | 662 | 46·9 | 44·5 | 2·4 | 0·4 | 0·2 | 12 | | 9·8 | Scud; cirro-strati. |
| | 8 | 663 | 47·8 | 45·0 | 2·8 | 0·4 | 0·3 | 12 | | 9·5 | Id.; id. |
| | 9 | 679 | 48·0 | 45·2 | 2·8 | 0·6 | 0·4 | 13 | | 10·0 | Id.; id. |
| | 10 | 689 | 47·9 | 45·6 | 2·3 | 0·7 | 0·3 | 12 | | 10·0 | Id.; id. |
| | 11 | 683 | 47·1 | 45·8 | 1·3 | 0·7 | 0·3 | 12 | | 10·0 | Id.; id. |
| | 12 | 680 | 47·3 | 45·4 | 1·9 | 0·7 | 0·5 | 12 | | 10·0 | Id.; id.; drops of rain. |
| | 13 | 29·680 | 46·9 | 45·2 | 1·7 | 0·7 | 0·6 | 12 | 12 : — : — | 9·5 | Scud; cirro-cumulo-strati; cir.-str.; lunar corona. ☽ |
| | 14 | 682 | 47·3 | 45·5 | 1·8 | 0·8 | 0·6 | 12 | | 10·0 | Id. |
| | 15 | 680 | 48·0 | 46·0 | 2·0 | 1·3 | 1·7 | 12 | | 10·0 | Id. |
| | 16 | 678 | 48·0 | 45·8 | 2·2 | 0·9 | 0·8 | 12 | | 10·0 | Id.; cirro-strati; cirrous haze. |
| | 17 | 673 | 47·0 | 45·3 | 1·7 | 1·0 | 0·4 | 11 | | 10·0 | As before. |
| | 18 | 676 | 48·0 | 45·8 | 2·2 | 1·0 | 0·8 | 11 | | 10·0 | Id.; drops of rain. |
| | 19 | 675 | 48·4 | 46·3 | 2·1 | 1·1 | 0·4 | 11 | | 10·0 | Id. |
| | 20 | 682 | 47·7 | 46·0 | 1·7 | 0·6 | 0·4 | 12 | 12 : — : — | 10·0 | Thick scud; drops of rain. |
| | 21 | 690 | 48·1 | 45·6 | 2·5 | 1·1 | 0·7 | 12 | — : 12 : — | 10·0 | Thick wavy cirro-strati. |
| | 22 | 687 | 48·0 | 46·0 | 2·0 | 0·9 | 0·9 | 12 | 12 : — : — | 9·9 | Thick scud; cirro-strati; sky to SW. |
| | 23 | 682 | 49·6 | 46·1 | 3·5 | 1·5 | 1·2 | 12 | 12 : — : — | 9·9 | As before; clouds more broken. |
| 31 | 0 | 674 | 50·3 | 46·2 | 4·1 | 1·7 | 1·2 | 12 | 12 : — : — | 10·0 | Scud; cirro-stratous scud; cirro-strati. |
| | 1 | 666 | 50·3 | 46·4 | 3·9 | 1·8 | 0·5 | 12 | 12 : — : — | 10·0 | The same. |
| | 2 | 651 | 49·3 | 45·8 | 3·5 | 1·6 | 1·4 | 12 | 12 : — : — | 10·0 | Id. |

The direction of the wind is indicated by the number of the point of the compass, reckoning N. = 0, E. = 8, S. = 16, W. = 24. The motions of the three strata of clouds, Sc. (scud), C.-s. (cirro-stratus), and Cir. (cirrus), are indicated in a similar manner.

Oct. 28d 19h. Linear cirri lying from ESE. to WNW.; stratus in the valleys. 20h. A bank of scud and loose cumuli on N., E., and S. horizon moving towards N.; scud on Cheviot. 22h. The lowest scud hanging in loose ragged masses; a slight fog.

| Gött. Mean Time. | | Barometer at 32°. | Thermometers. | | | Wind. | | | Clouds, Sc. : C.-s. : Ci., moving from | Sky clouded. | Species of Clouds and Meteorological Remarks. |
|---|---|---|---|---|---|---|---|---|---|---|---|
| | | | Dry. | Wet. | Diff. | Maximum force in 1h. | Maximum force in 10m. | From | | | |
| d. | h. | in. | ° | ° | ° | lbs. | lbs. | pt. | pt. pt. pt. | 0—10. | |
| 31 | 3 | 29·636 | 48·8 | 45·8 | 3·0 | 2·4 | 1·3 | 12 | 12 : — : — | 10·0 | Dense scud and cirro-strati. |
| | 4 | 634 | 48·5 | 45·5 | 3·0 | 1·5 | 0·8 | 12 | 12 : — : — | 10·0 | As before. |
| | 5 | 627 | 48·2 | 44·9 | 3·3 | 2·2 | 1·2 | 12 | 12 : — : — | 9·8 | Scud ; woolly cirri ; cirro-strati. |
| | 6 | 621 | 48·0 | 44·9 | 3·1 | 2·4 | 1·6 | 12 | 12 : — : — | 9·5 | Id. |
| | 7 | 630 | 48·3 | 45·2 | 3·1 | 2·3 | 1·1 | 12 | | 10·0 | Id. ; dark. |
| | 8 | 620 | 48·2 | 44·9 | 3·3 | 2·5 | 1·8 | 12 | | 9·8 | Id. ; id. |
| | 9 | 618 | 48·3 | 44·9 | 3·4 | 2·4 | 1·3 | 12 | | 10·0 | Id. ; id. |
| | 10 | 603 | 48·0 | 44·5 | 3·5 | 1·6 | 1·4 | 10 | | 9·5 | Id. ; id. |
| | 11 | 588 | 48·1 | 44·7 | 3·4 | 2·2 | 2·2 | 10 | | 10·0 | Id. |
| | 12 | 587 | 48·0 | 44·5 | 3·5 | 2·2 | 1·2 | 10 | | 10·0 | Id. |
| | 13 | 29·585 | 47·7 | 44·0 | 3·7 | 2·0 | 1·5 | 10 | | 10·0 | Scud. |
| | 14 | 581 | 47·3 | 43·6 | 3·7 | 2·1 | 1·3 | 10 | | 10·0 | Id. |
| | 15 | 569 | 47·2 | 43·5 | 3·7 | 1·8 | 1·3 | 11 | | 10·0 | Id. |
| | 16 | 553 | 46·9 | 43·4 | 3·5 | 2·1 | 1·0 | 10 | | 10·0 | Id. |
| | 17 | 547 | 47·0 | 43·3 | 3·7 | 2·8 | 1·5 | 11 | | 10·0 | Id. |
| | 18 | 542 | 46·8 | 43·4 | 3·4 | 2·0 | 1·4 | 11 | | 10·0 | Thick scud. |
| | 19 | 539 | 46·2 | 42·8 | 3·4 | 1·7 | 1·1 | 10 | 11 : — : — | 9·5 | Id. ; cirro-strati, tinged red. |
| | 20 | 542 | 45·7 | 42·2 | 3·5 | 2·0 | 1·5 | 8 | 11 : — : — | 9·5 | Id. ; id. ; cirri. |
| | 21 | 539 | 46·0 | 42·9 | 3·1 | 0·9 | 1·3 | 8 | 10 : — : — | 9·8 | Scud ; id. ; mottled cirri. |
| | 22 | 534 | 46·6 | 43·1 | 3·5 | 1·9 | 2·2 | 9 | 10 : — : — | 9·5 | Id. ; id. ; woolly cirri. ● |
| | 23 | 525 | 47·9 | 43·7 | 4·2 | 2·5 | 1·8 | 9 | 10 : — : — | 9·5 | Scud and loose cum. ; woolly and mottled cir. ; cir.-str. |
| 1 | 0 | 520 | 47·5 | 43·3 | 4·2 | 2·5 | 1·5 | 9 | 10 : 8 : — | 9·0 | Id. ; cirro-cumuli ; cirri. |
| | 1 | 495 | 46·5 | 42·2 | 4·3 | 2·8 | 2·0 | 8 | 10 : 12 : — | 7·5 | Id. ; id. |
| | 2 | 486 | 47·3 | 42·9 | 4·4 | 2·5 | 2·5 | 8 | 10 : — : — | 9·0 | Id. ; id. ● |
| | 3 | 482 | 46·8 | 42·7 | 4·1 | 2·8 | 1·6 | 10 | 10 : — : — | 9·0 | Id. ; id. |
| | 4 | 481 | 46·0 | 42·1 | 3·9 | 2·4 | 2·0 | 9 | 10 : — : — | 8·5 | Id. ; id. |
| | 5 | 476 | 45·2 | 41·4 | 3·8 | 2·1 | 1·9 | 8 | 10 : — : — | 9·0 | Thick scud ; cirro-strati ; cirri. |
| | 6 | 463 | 44·6 | 41·1 | 3·5 | 3·6 | 2·2 | 8 | 9 : — : — | 7·0 | Loose smoky scud ; cirri. |
| | 7 | 457 | 44·1 | 40·8 | 3·3 | 2·8 | 2·9 | 8 | | 3·5 | Scud. |
| | 8 | 457 | 44·6 | 41·2 | 3·4 | 3·7 | 3·5 | 7 | | 4·0 | Id. |
| | 9 | 456 | 44·8 | 41·3 | 3·5 | 2·4 | 2·9 | 8 | | 9·5 | Id. |
| | 10 | 458 | 45·0 | 41·3 | 3·7 | 3·0 | 2·4 | 9 | | 9·8 | Id. |
| | 11 | 453 | 45·3 | 40·9 | 4·4 | 3·2 | 2·9 | 8 | | 9·5 | Id. |
| | 12 | 451 | 44·9 | 40·6 | 4·3 | 3·0 | 2·3 | 9 | | 9·8 | Id. |
| | 13 | 29·439 | 45·0 | 40·5 | 4·5 | 3·5 | 1·3 | 8 | 9 : — : — | 9·8 | Scud. |
| | 14 | 431 | 44·7 | 40·3 | 4·4 | 2·5 | 2·6 | 9 | 9 : — : — | 9·5 | Id. ☄ |
| | 15 | 412 | 44·7 | 40·2 | 4·5 | 2·5 | 2·2 | 8 | | 10·0 | Id. |
| | 16 | 406 | 44·7 | 40·0 | 4·7 | 3·5 | 3·8 | 7 | | 10·0 | Id. |
| | 17 | 397 | 43·8 | 39·9 | 3·9 | 3·8 | 3·8 | 7 | | 10·0 | Id. ; drops of rain. |
| | 18 | 397 | 43·7 | 39·7 | 4·0 | 3·2 | 3·1 | 7 | | 10·0 | Id. ; id. |
| | 19 | 397 | 43·8 | 39·3 | 4·5 | 3·3 | 3·4 | 7 | 9 : — : — | 10·0 | Id. ; id. |
| | 20 | 401 | 42·6 | 39·7 | 2·9 | 3·6 | 2·9 | 7 | 8 : — : — | 10·0 | Id. ; shower$^{0\cdot2}$ |
| | 21 | 399 | 43·5 | 41·0 | 2·5 | 3·5 | 2·0 | 7 | 8 : — : — | 9·9 | Id. ; rain falling to E. |
| | 22 | 410 | 42·2 | 40·3 | 1·9 | 3·9 | 1·7 | 7 | 8 : — : — | 10·0 | Id. ; dense cirrous mass ; passing showers. |
| | 23 | 418 | 43·8 | 40·7 | 3·1 | 4·3 | 2·5 | 7 | 8 : — : — | 9·5 | Loose scud ; cir.-str. scud ; cir.-str. ; showers around. |
| 2 | 0 | 418 | 44·8 | 40·6 | 4·2 | 3·4 | 2·8 | 7 | 8 : — : — | 9·8 | As before. |
| | 1 | 422 | 44·8 | 40·6 | 4·2 | 3·4 | 2·7 | 7 | 8 : — : — | 9·9 | Id. ● |
| | 2 | 421 | 45·3 | 41·7 | 3·6 | 4·8 | 1·8 | 7 | 8 : — : — | 9·2 | Id. ; rain$^{0\cdot2}$ ; rainbow. ⊖ |
| | 3 | 416 | 45·0 | 41·9 | 3·1 | 4·0 | 2·4 | 7 | 8 : 8 : — | 9·8 | Scud ; cirro-stratous scud ; showers around. |
| | 4 | 419 | 45·2 | 40·5 | 4·7 | 3·0 | 2·3 | 7 | 8 : 8 : — | 9·0 | Id. ; id. |
| | 5 | 429 | 45·1 | 40·8 | 4·3 | 3·4 | 1·6 | 6 | 8 : — : — | 10·0 | Id. ; id. |
| | 6 | 440 | 44·3 | 41·8 | 2·5 | 2·9 | 1·2 | 5 | | 9·8 | Id. ; drops of rain. |
| | 7 | 458 | 44·9 | 40·5 | 4·4 | 4·0 | 2·0 | 6 | | 9·5 | Id. |
| | 8 | 472 | 45·3 | 40·4 | 4·9 | 3·7 | 1·9 | 6 | | 8·0 | Id. ☽ |
| | 9 | 479 | 44·9 | 40·6 | 4·3 | 2·6 | 2·4 | 6 | | 9·0 | Id. |
| | 10 | 494 | 45·0 | 40·7 | 4·3 | 2·2 | 3·0 | 6 | | 8·0 | Id. |

The direction of the wind is indicated by the number of the point of the compass, reckoning N. = 0, E. = 8, S. = 16, W. = 24. The motions of the three strata of clouds, Sc. (scud), C.-s. (cirro-stratus), and Cir. (cirrus), are indicated in a similar manner.

| Gött. Mean Time. | Barometer at 32°. | Thermometers. Dry. | Wet. | Diff. | Wind. Maximum force in 1h. | 10m. | From | Clouds, Sc. : C.-s. : Ci., moving from | Sky clouded. | Species of Clouds and Meteorological Remarks. |
|---|---|---|---|---|---|---|---|---|---|---|
| d. h. | in. | | ° | ° | lbs. | lbs. | pt. | pt. pt. pt. | 0—10. | |
| 2 11 | 29·507 | 45·2 | 40·8 | 4·4 | 2·8 | 1·8 | 6 | | 9·5 | Scud. |
| 12 | 521 | 45·2 | 40·7 | 4·5 | 2·6 | 2·2 | 6 | | 9·8 | Id.; drops of rain. |
| 23 | 29·582 | 45·9 | 41·1 | 4·8 | 3·1 | 1·5 | 6 | —: 7:— | ····· | Sunday—Cloudy, chiefly cir.-str. scud; very showery. |
| 3 13 | 29·514 | 42·5 | 40·3 | 2·2 | 2·6 | 0·3 | 6 | | 10·0 | Clouds nearly homogeneous; rain$^{0\cdot5}$ |
| 14 | 490 | 42·8 | 39·3 | 3·5 | 0·8 | 0·3 | 6 | —: 4:— | 9·9 | Cirro-stratous scud; cirro-strati; drops of rain. ) |
| 15 | 474 | 42·7 | 41·0 | 1·7 | 0·5 | 0·7 | 4 | | 10·0 | Id.; id.; id. |
| 16 | 452 | 43·2 | 41·1 | 2·1 | 1·0 | 1·2 | 4 | | 10·0 | Id.; id. |
| 17 | 457 | 43·7 | 40·8 | 2·9 | 1·1 | 0·7 | 4 | | 10·0 | Id.; id. |
| 18 | 439 | 43·7 | 40·6 | 3·1 | 1·1 | 0·8 | 4 | | 10·0 | Id.; id. |
| 19 | 430 | 43·7 | 40·9 | 2·8 | 0·9 | 0·8 | 4 | | 10·0 | Id.; id. |
| 20 | 419 | 43·2 | 40·4 | 2·8 | 0·9 | 0·9 | 3 | —: 5:— | 10·0 | Id.; id. |
| 21 | 401 | 42·9 | 40·3 | 2·6 | 1·1 | 1·3 | 3 | —: 4:— | 10·0 | Cirro-stratous scud. |
| 22 | 391 | 43·3 | 40·2 | 3·1 | 1·2 | 0·9 | 2 | —: 4:— | 10·0 | Id. |
| 23 | 381 | 43·6 | 40·3 | 3·3 | 1·1 | 0·6 | 2 | —: 4:— | 10·0 | Id.; drops of rain. |
| 4 0 | 367 | 43·4 | 40·2 | 3·2 | 1·1 | 0·5 | 2 | —: 4:— | 10·0 | Id.; id.; rain to N. and E. |
| 1 | 342 | 44·0 | 40·4 | 3·6 | 1·1 | 0·6 | 2 | —: 4:— | 10·0 | Id. |
| 2 | 310 | 43·2 | 40·2 | 3·0 | 1·7 | 1·4 | 2 | —: 4:— | 10·0 | Cirro-stratous scud; loose cumuli; cirro-strati. ⊖ |
| 3 | 289 | 44·3 | 41·0 | 3·3 | 1·3 | 1·0 | 3 | —: 4:— | 9·0 | Cirro-cumuli; woolly cirri; cirro-strati; cirrous haze. |
| 4 | 277 | 44·2 | 40·3 | 3·9 | 1·8 | 1·1 | 3 | 4:—:— | 9·0 | Scud; cirro-cumuli, &c. as before. |
| 5 | 258 | 42·6 | 39·4 | 3·2 | 1·2 | 1·0 | 3 | —: 4:— | 10·0 | Cirro-stratous scud; cirrous mass. |
| 6 | 248 | 40·7 | 39·7 | 1·0 | 1·5 | 1·3 | 3 | | 10·0 | As before; rain$^{0\cdot2}$ |
| 7 | 229 | 42·0 | 40·4 | 1·6 | 1·5 | 1·0 | 2 | | 10·0 | Scud; id. |
| 8 | 223 | 41·9 | 40·3 | 1·6 | 1·1 | 0·5 | 2 | | 10·0 | Id.; id. |
| 9 | 213 | 43·0 | 41·1 | 1·9 | 0·9 | 0·8 | 2 | | 10·0 | Id.; showers$^{1-0\cdot2}$ |
| 10 | 205 | 43·8 | 42·3 | 1·5 | 0·9 | 0·8 | 3 | | 10·0 | Id.; drops of rain. |
| 11 | 201 | 44·0 | 42·7 | 1·3 | 1·3 | 1·4 | 4 | | 10·0 | Id.; rain$^{0\cdot5}$ |
| 12 | 199 | 44·0 | 43·0 | 1·0 | 1·5 | 1·3 | 3 | | 10·0 | Rain$^{1}$ |
| 13 | 29·201 | 44·2 | 43·6 | 0·6 | 1·1 | 1·0 | 4 | | 10·0 | Rain$^{1}$ |
| 14 | 201 | 44·6 | 43·7 | 0·9 | 1·3 | 0·6 | 4 | | 9·9 | Rain$^{0\cdot5-2}$ since last hour. |
| 15 | 210 | 44·1 | 43·6 | 0·5 | 1·0 | 0·5 | 3 | | 9·9 | Showers$^{0\cdot5-2}$; shower of hail since 14h. |
| 16 | 207 | 44·2 | 43·3 | 0·9 | 0·9 | 0·8 | 4 | | 9·9 | Scud; cirro-strati; passing showers. |
| 17 | 224 | 43·7 | 43·0 | 0·7 | 1·1 | 0·3 | 5 | | 10·0 | As before. |
| 18 | 227 | 43·7 | 42·9 | 0·8 | 1·0 | 0·4 | 4 | | 10·0 | Id. |
| 19 | 237 | 43·7 | 42·4 | 1·3 | 0·9 | 0·6 | 4 | 4:—:— | 9·9 | Scud; woolly cirri; showers. |
| 20 | 258 | 44·0 | 42·6 | 1·4 | 1·4 | 0·7 | 4 | 5:—:— | 10·0 | Id.; id.; id. |
| 21 | 273 | 44·0 | 42·6 | 1·4 | 0·8 | 0·5 | 4 | 5:—:— | 10·0 | Id.; showers; rain$^{1-2}$ at 21h 10m. |
| 22 | 283 | 43·2 | 42·2 | 1·0 | 1·8 | 1·0 | 4 | 6:—:— | 10·0 | Id.; rain$^{1}$ |
| 23 | 282 | 43·9 | 42·0 | 1·9 | 1·2 | 0·7 | 3 | 6: 5:— | 10·0 | Id.; cirro-stratous scud; cirro-strati. |
| 5 0 | 284 | 44·2 | 42·1 | 2·1 | 1·1 | 0·8 | 3 | 6: 5:— | 10·0 | As before; showers, hail and rain. |
| 1 | 290 | 42·0 | 40·6 | 1·4 | 2·3 | 1·7 | 4 | 6:—:— | 10·0 | Scud; cirro-strati; rain$^{1-3}$ |
| 2 | 280 | 42·5 | 41·4 | 1·1 | 1·3 | 0·7 | 4 | —: 7:— | 9·0 | Cirro-cumulo-strati; cirro-strati; passing showers. |
| 3 | 277 | 43·8 | 42·0 | 1·8 | 1·5 | 1·2 | 4 | 6: 6:— | 9·0 | Scud; loose cumuli; cumuli; cirri; id. |
| 4 | 277 | 43·4 | 41·4 | 2·0 | 1·3 | 1·1 | 4 | 7:—:— | 8·0 | Id.; id.; rain to S. |
| 5 | 285 | 42·3 | 41·0 | 1·3 | 1·0 | 0·8 | 4 | 6:—: 3 | 9·8 | Id.; woolly cirri. |
| 6 | 293 | 42·9 | 41·8 | 1·1 | 0·9 | 0·6 | 4 | | 10·0 | Rain$^{1}$ |
| 7 | 304 | 43·6 | 42·0 | 1·6 | 1·0 | 1·2 | 4 | | 10·0 | Rain$^{1-2}$ |
| 8 | 310 | 42·8 | 42·0 | 0·8 | 1·2 | 0·1 | | | 10·0 | Rain$^{1}$ |
| 9 | 315 | 42·8 | 41·3 | 1·5 | 1·1 | 0·8 | 4 | | 9·9 | Scud, &c.; showers. |
| 10 | 323 | 42·7 | 41·3 | 1·4 | 1·6 | 0·7 | 4 | | 10·0 | Id. |
| 11 | 329 | 41·8 | 40·2 | 1·6 | 0·9 | 0·7 | 4 | | 4·0 | Id.; showers. |
| 12 | 322 | 41·9 | 40·2 | 1·7 | 0·5 | 0·7 | 4 | | 3·5 | Id.; id. |
| 13 | 29·307 | 42·3 | 41·6 | 0·7 | 0·6 | 0·5 | 4 | | 10·0 | Scud; rain$^{1}$ |
| 14 | 295 | 43·0 | 42·4 | 0·6 | 0·8 | 0·5 | 4 | | 10·0 | Id.; id. |
| 15 | 287 | 43·3 | 42·9 | 0·4 | 0·6 | 0·9 | 4 | | 10·0 | Id.; id. |
| 16 | 279 | 43·7 | 42·7 | 1·0 | 1·1 | 0·7 | 4 | | 10·0 | Id.; rain$^{0\cdot5}$ |

The direction of the wind is indicated by the number of the point of the compass, reckoning N. = 0, E. = 8, S. = 16, W. = 24. The motions of the three strata of clouds, Sc. (scud), C.-s. (cirro-stratus), and Cir. (cirrus), are indicated in a similar manner.

| Gött. Mean Time. | Barometer at 32°. | Thermometers. Dry. | Wet. | Diff. | Wind. Maximum force in 1h. | 10m. | From | Clouds, Sc.: C.-s.: Ci., moving from | Sky clouded. | Species of Clouds and Meteorological Remarks. |
|---|---|---|---|---|---|---|---|---|---|---|
| d. h. | in. | ° | ° | ° | lbs. | lbs. | pt. | pt. pt. pt. | 0—10. | |
| 5 17 | 29·275 | 43·2 | 42·2 | 1·0 | 1·1 | 0·6 | 5 | | 10·0 | Scud; rain[1] |
| 18 | 273 | 43·0 | 42·0 | 1·0 | 1·0 | 0·8 | 3 | | 10·0 | Id.; rain[2] |
| 19 | 266 | 42·1 | 41·4 | 0·7 | 2·0 | 0·7 | 3 | | 9·9 | Id.; cirro-strati. |
| 20 | 267 | 42·7 | 41·9 | 0·8 | 1·0 | 0·8 | 4 | 6 : — : — | 10·0 | Id.; cirri; cirro-strati; showers. |
| 21 | 270 | 43·7 | 42·4 | 1·3 | 1·3 | 0·8 | 4 | 6 : — : — | 10·0 | Id.; id.; id.; rain[0·2] |
| 22 | 257 | 44·4 | 43·2 | 1·2 | 1·6 | 1·3 | 4 | 6 : — : — | 10·0 | The same. |
| 23 | 256 | 43·9 | 42·6 | 1·3 | 3·1 | 1·4 | 4 | 6 : — : — | 10·0 | Id.; rain[1] |
| 6 0 | 240 | 42·7 | 42·3 | 0·4 | 3·0 | 1·1 | 4 | 6 : — : — | 10·0 | Scud; rain[0·5] |
| 1 | 222 | 42·9 | 42·3 | 0·6 | 2·5 | 2·2 | 3 | | 10·0 | Id.; rain[1] |
| 2 | 196 | 43·2 | 42·3 | 0·9 | 3·0 | 2·0 | 4 | 5 : — : — | 10·0 | Id.; rain[0·5] |
| 3 | 175 | 43·9 | 43·0 | 0·9 | 3·0 | 1·3 | 4 | 5 : — : — | 10·0 | Id.; rain[2] |
| 4 | 166 | 44·0 | 43·0 | 1·0 | 3·4 | 2·3 | 4 | | 10·0 | Id.; id. |
| 5 | 151 | 44·3 | 43·2 | 1·1 | 3·7 | 3·6 | 4 | | 10·0 | Id.; id. |
| 6 | 159 | 43·9 | 43·2 | 0·7 | 4·5 | 1·9 | 4 | | 10·0 | Id.; rain[3] |
| 7 | 163 | 44·3 | 43·6 | 0·7 | 2·7 | 1·4 | 4 | | 10·0 | Id.; rain[2] |
| 8 | 165 | 44·7 | 43·9 | 0·8 | 2·7 | 2·3 | 4 | | 10·0 | Id.; id. |
| 9 | 170 | 44·8 | 44·2 | 0·6 | 2·5 | 1·5 | 4 | | 10·0 | Id.; id. |
| 10 | 170 | 45·2 | 44·7 | 0·5 | 2·5 | 1·1 | 6 | | 10·0 | Id.; rain[2-3] |
| 11 | 177 | 44·7 | 44·0 | 0·7 | 1·1 | 1·2 | 6 | | 10·0 | Id.; rain[1-2] |
| 12 | 181 | 44·6 | 43·9 | 0·7 | 1·5 | 0·4 | 6 | | 10·0 | Id.; rain[1] |
| 13 | 29·177 | 44·1 | 43·6 | 0·5 | 0·7 | 0·2 | 6 | | 10·0 | Scud; rain[0·5] |
| 14 | 177 | 43·7 | 43·1 | 0·6 | 0·3 | 0·2 | 6 | | 10·0 | Clouds more broken; rain ceased. |
| 15 | 193 | 42·9 | 42·4 | 0·5 | 0·2 | 0·1 | | | 9·8 | Scud; cirro-strati; cirri? |
| 16 | 184 | 42·7 | 42·3 | 0·4 | 0·2 | 0·2 | | | 3·5 | Id.; id. |
| 17 | 193 | 41·9 | 41·6 | 0·3 | 0·1 | 0·0 | | | 1·5 | Id.; cirri. ☽ |
| 18 | 197 | 40·8 | 40·5 | 0·3 | 0·0 | 0·0 | 5 | 4 : — : — | 1·5 | Id.; id. ☽ |
| 19 | 204 | 40·8 | 40·4 | 0·4 | 0·2 | 0·1 | 0 | 8 : — : — | 6·0 | Id.; cirro-strati. ☽ |
| 20 | 220 | 40·4 | 40·0 | 0·4 | 0·2 | 0·1 | 6 | 8 : — : — | 9·9 | Id.; cumulo-strati; cirro-strati. |
| 21 | 229 | 41·5 | 41·0 | 0·5 | 0·1 | 0·1 | | 8 : — : — | 9·9 | Id.; cirro-strati. |
| 22 | 239 | 42·7 | 42·0 | 0·7 | 0·0 | 0·0 | 4 | | 9·9 | Id.; id.; cumulo-strati to E. and N. |
| 23 | 253 | 43·5 | 42·8 | 0·7 | 0·1 | 0·2 | 8 | — : 9 : — | 9·8 | Cir.-str. scud; cir.-str.; id. |
| 7 0 | 265 | 45·0 | 43·8 | 1·2 | 0·1 | 0·1 | 10 | 10 : — : — | 9·9 | Scud; cirro-stratous scud; cirro-strati. |
| 1 | 263 | 45·5 | 43·3 | 2·2 | 0·1 | 0·1 | 4 | 10 : — : — | 9·9 | Id.; id. id. |
| 2 | 259 | 46·0 | 43·7 | 2·3 | 0·2 | 0·0 | 4 | 10 : — : — | 9·9 | The same. |
| 3 | 254 | 45·2 | 43·4 | 1·8 | 0·1 | 0·1 | 4 | 10 : — : — | 9·9 | Id. |
| 4 | 256 | 44·7 | 43·4 | 1·3 | 0·1 | 0·1 | 4 | 10 : — : — | 9·9 | Id.; sky to NW. |
| 5 | 254 | 44·3 | 43·0 | 1·3 | 0·2 | 0·2 | 4 | 10 : — : — | 9·5 | Scud; cir.-str. scud; cum.-str.; stratous scud to N. |
| 6 | 249 | 42·8 | 41·9 | 0·9 | 0·1 | 0·1 | 6 | | 9·5 | As before; shower[0·5] |
| 7 | 255 | 42·4 | 41·9 | 0·5 | 0·1 | 0·0 | | | 10·0 | Overcast; dark; rain[0·5] |
| 8 | 257 | 40·4 | 40·2 | 0·2 | 0·0 | 0·0 | | | 1·5 | Cirro-stratous scud? |
| 9 | 265 | 37·1 | 36·8 | 0·3 | 0·0 | 0·0 | | | 0·5? | Scud on horizon; foggy. |
| 10 | 267 | 35·9 | 35·7 | 0·2 | 0·0 | 0·0 | | | 1·8 | Cirro-stratous scud; fog nearly away. |
| 11 | 257 | 34·2 | 34·0 | 0·2 | 0·0 | 0·0 | | | 3·0 | Cirro-strati; foggy. |
| 12 | 251 | 35·6 | 35·3 | 0·3 | 0·0 | 0·0 | | | 10·0 | Overcast; fog gone off. |
| 13 | 29·245 | 36·9 | 36·6 | 0·3 | 0·0 | 0·0 | | | 10·0 | Overcast; foggy. |
| 14 | 232 | 38·3 | 38·0 | 0·3 | 0·0 | 0·0 | | | 9·5 | Cirro-strati. |
| 15 | 215 | 38·9 | 38·6 | 0·3 | 0·0 | 0·0 | | | 9·5 | Id. |
| 16 | 203 | 39·0 | 38·8 | 0·2 | 0·1 | 0·0 | | | 7·0 | Thin clouds; drops of rain. |
| 17 | 187 | 39·0 | 38·8 | 0·2 | 0·0 | 0 0 | | | 6·0 | Id. |
| 18 | 172 | 39·9 | 39·6 | 0·3 | 0·0 | 0·0 | | | 8.0 | Id. |
| 19 | 160 | 41·0 | 40·8 | 0·2 | 0·2 | 0·2 | 6 | 10 : — : — | 9·5 | Scud; cirro-strati; cirri. |
| 20 | 152 | 41·6 | 41·2 | 0·4 | 0·2 | 0·2 | 4 | 8 : 10 : — | 10·0 | Stratous scud; cirro-stratous scud; cirri. |
| 21 | 150 | 42·0 | 41·7 | 0·3 | 0·2 | 0·1 | 4 | — : 10 : — | 10·0 | Cirro-stratous scud; *rain[0·5] |
| 22 | 136 | 45·2 | 44·7 | 0·5 | 0·4 | 0·3 | 4 | — : 8 : — | 10·0 | Id.; cirro-strati; rain[1] |
| 23 | 115 | 46·7 | 46·1 | 0·6 | 0·4 | 0·4 | 4 | 8 : 10 : — | 10·0 | Misty scud; cirro-stratous scud; cirrous mass. |
| 8 0 | 095 | 47·7 | 46·9 | 0·8 | 0·5 | 0·5 | 5 | 8 : 9 : — | 10·0 | Id.; id.; id. |

The direction of the wind is indicated by the number of the point of the compass, reckoning N. = 0, E. = 8, S. = 16, W. = 24. The motions of the three strata of clouds, Sc. (scud), C.-s. (cirro-stratus), and Cir. (cirrus), are indicated in a similar manner.

| Gött. Mean Time. | | Barometer at 32°. | Thermometers. Dry. | Wet. | Diff. | Wind. Maximum force in 1h. | 10m. | From | Clouds, Sc.:C.-s.:Ci., moving from | Sky clouded. | Species of Clouds and Meteorological Remarks. |
|---|---|---|---|---|---|---|---|---|---|---|---|
| d. | h. | in. | ° | ° | ° | lbs. | lbs. | pt. | pt. pt. pt. | 0—10. | |
| 8 | 1 | 29·059 | 48·3 | 47·0 | 1·3 | 1·0 | 0·8 | 6 | 8 : 9 : — | 9·8 | As before. |
| | 2 | 030 | 48·9 | 47·5 | 1·4 | 0·9 | 0·6 | 6 | 8 : 9 : — | 10·0 | Id.; drops of rain. |
| | 3 | 29·002 | 48·3 | 46·9 | 1·4 | 0·9 | 0·5 | 6 | 7 : — : — | 10·0 | Misty scud; cirro-stratous scud; cirrous mass. |
| | 4 | 28·986 | 47·9 | 46·5 | 1·4 | 1·1 | 0·7 | 5 | 7 : — : — | 10·0 | As before; rain$^{0·2}$ |
| | 5 | 941 | 47·6 | 46·2 | 1·4 | 1·1 | 0·3 | 5 | 7 : — : — | 10·0 | Scud. |
| | 6 | 930 | 47·0 | 46·0 | 1·0 | 0·8 | 0·7 | 6 | | 10·0 | Rain$^{1·2}$ |
| | 7 | 904 | 46·9 | 46·1 | 0·8 | 1·4 | 1·1 | 4 | | 10·0 | Rain$^{1}$ |
| | 8 | 887 | 46·9 | 46·0 | 0·9 | 1·4 | 0·6 | 6 | | 10·0 | Id. |
| | 9 | 865 | 46·5 | 45·9 | 0·6 | 0·6 | 0·3 | 6 | | 10·0 | Dark; rain$^{0·5}$ |
| | 10 | 850 | 47·0 | 46·3 | 0·7 | 0·4 | 0·2 | | | 10·0 | Id. |
| | 11 | 839 | 46·8 | 46·3 | 0·5 | 0·2 | 0·2 | | | 10·0 | Scud; dark. |
| | 12 | 824 | 47·0 | 46·4 | 0·6 | 0·3 | 0·1 | | | 10·0 | Id.; id.; rain$^{0·5}$ |
| | 13 | 28·803 | 47·2 | 46·7 | 0·5 | 0·3 | 0·3 | | | 10·0 | Scud; dark; rain$^{0·5}$ |
| | 14 | 797 | 46·7 | 46·1 | 0·6 | 0·5 | 0·4 | | | 10·0 | Id.; id. |
| | 15 | 789 | 46·0 | 45·0 | 1·0 | 0·6 | 0·3 | 4 | | 10·0 | Id.; id. |
| | 16 | 767 | 45·2 | 44·8 | 0·4 | 0·5 | 0·4 | | | 10·0 | Id.; id.; rain$^{0·5}$ |
| | 17 | 751 | 44·7 | 44·0 | 0·7 | 0·5 | 0·3 | | | 10·0 | Id.; id. |
| | 18 | 739 | 44·3 | 43·8 | 0·5 | 0·2 | 0·1 | | | 10·0 | Id.; id. |
| | 19 | 715 | 44·3 | 43·4 | 0·9 | 0·1 | 0·0 | | | 9·7 | Cirro-stratous scud. |
| | 20 | 711 | 44·0 | 43·3 | 0·7 | 0·1 | 0·0 | | | 9·8 | Scud; cirro-strati; cirri; red to NE. |
| | 21 | 713 | 44·4 | 43·9 | 0·5 | 0·1 | 0·0 | 20 | 0 : — : — | 9·8 | Misty scud; cirrous scud; cirro-strati; woolly cirri. |
| | 22 | 716 | 45·9 | 45·0 | 0·9 | 0·0 | 0·0 | 17 | | 9·5 | Cirro-strati, cirri, scarcely moving. |
| | 23 | 718 | 47·4 | 45·7 | 1·7 | 0·1 | 0·0 | 28 | 28 : St. : — | 9·9 | Scud; cirro-strati; cirri. |
| 9 | 0 | 712 | 47·2 | 45·3 | 1·9 | 0·3 | 0·2 | 28 | 25 : 0 : 0 | 9·8 | Id.; id.; woolly cirri. |
| | 1 | 700 | 49·0 | 46·1 | 2·9 | 0·1 | 0·0 | 24 | — : 2 : — | 9·9 | Cirro-strati; cirro-cumuli; cirri; patches of scud. ● |
| | 2 | 697 | 49·6 | 45·9 | 3·7 | 0·1 | 0·0 | 22 | 24 : — : — | 9·8 | Patches of scud; cirro-strati; loose cirro-cumuli. ⊖ |
| | 3 | 700 | 49·0 | 46·0 | 3·0 | 0·2 | 0·0 | | 21 : — : — | 9·8 | Loose scud; cirro-strati; cirro-cumuli. |
| | 4 | 711 | 47·3 | 44·6 | 2·7 | 0·1 | 0·0 | 23 | 22 : 22 : — | 9·7 | Scud; cirro-stratous scud; id. |
| | 5 | 715 | 45·9 | 44·0 | 1·9 | 1·0 | 0·0 | 20 | 22 : — : — | 9·8 | Id.; red to W. |
| | 6 | 732 | 44·8 | 42·3 | 2·5 | 0·2 | 0·1 | 20 | | 9·7 | Id.; id. |
| | 7 | 742 | 43·2 | 41·5 | 1·7 | 0·1 | 0·1 | | | 9·9 | |
| | 8 | 746 | 42·5 | 40·9 | 1·6 | 0·1 | 0·1 | | | 10·0 | Scud; dark. |
| | 9 | 760 | 42·9 | 41·5 | 1·4 | 0·1 | 0·0 | | | 10·0 | Id.; id.; drops of rain. |
| | 10 | 763 | 41·7 | 41·0 | 0·7 | 0·0 | 0·0 | | | 9·5 | Id.; cirro-strati; stars very dim. |
| | 11 | 765 | 41·7 | 40·9 | 0·8 | 0·1 | 0·1 | | | 9·8 | Cirro-strati; cirrous haze; stars very dim. |
| | 12 | 776 | 41·4 | 40·7 | 0·7 | 0·1 | 0·0 | 14 | | 6·5 | As before. |
| 10 | 0 | 28·831 | 45·5 | 44·0 | 1·5 | 0·0 | 0·0 | | — : 20 : — | ..... | Sunday—Cloudy; A.M. cir.-cum. scud; P.M. cirro-stratous scud; rain$^{1}$ at 2h. |
| | 13 | 28·796 | 41·7 | 41·2 | 0·5 | 0·1 | 0·0 | | | 10·0 | Cirro-stratous scud. |
| | 14 | 792 | 41·6 | 41·1 | 0·5 | 0·0 | 0·0 | | | 9·8 | Id. |
| | 15 | 796 | 41·8 | 41·1 | 0·7 | 0·0 | 0·0 | | | 10·0 | Id. |
| | 16 | 790 | 40·3 | 40·0 | 0·3 | 0·0 | 0·0 | | | 8·5 | Stars dim. |
| | 17 | 798 | 39·5 | 39·1 | 0·4 | 0·0 | 0·0 | | | 10·0 | |
| | 18 | 803 | 39·8 | 39·4 | 0·4 | 0·0 | 0·0 | | | 10·0 | |
| | 19 | 808 | 39·0 | 38·6 | 0·4 | 0·0 | 0·0 | 20 | — : 7 : — | 3·0 | Cirro-stratous scud, cir.-cum.-str., very slow motion. |
| | 20 | 821 | 36·1 | 35·9 | 0·2 | 0·1 | 0·0 | 18 | 26 : 28 : — | 7·0 | Scud, quickly; cir.-cum. scud; cirro-strati; cirri. |
| | 21 | 834 | 38·7 | 38·2 | 0·5 | 0·2 | 0·1 | 23 | 25 : — : — | 9·0 | Scud; id.; id. |
| | 22 | 846 | 42·9 | 40·8 | 2·1 | 0·3 | 0·4 | 26 | 26 : — : — | 8·5 | Id.; loose cumuli; cirro-strati; cirri. |
| | 23 | 864 | 42·3 | 40·0 | 2·3 | 0·4 | 0·4 | 24 | 26 : — : — | 10·0 | Id.; cirro-strati. |
| 11 | 0 | 876 | 42·0 | 39·7 | 2·3 | 1·0 | 0·7 | 24 | 26 : — : — | 10·0 | Id.; cirrous mass. |
| | 1 | 885 | 41·0 | 39·2 | 1·8 | 1·3 | 0·7 | 24 | 26 : — : — | 10·0 | Loose scud; cirrous mass; rain$^{0·5}$ |
| | 2 | 900 | 42·0 | 39·6 | 2·4 | 1·2 | 1·2 | 25 | 26 : — : — | 10·0 | Id.; cirro-strati; cirrous mass. |
| | 3 | 914 | 44·0 | 39·9 | 4·1 | 3·3 | 1·5 | 25 | 26 : — : — | 9·8 | Id.; id.; id. |
| | 4 | 931 | 43·4 | 39·3 | 4·1 | 1·9 | 2·7 | 24 | — : 26 : 15 | 7·0 | Cir.-str. scud; nimbi; woolly cir.; cir.-str.; rainbow. ⊙ |
| | 5 | 933 | 40·4 | 36·9 | 3·5 | 2·4 | 2·0 | 23 | | 1·8 | Cirro-stratous scud; cir.-str. on horizon; sky milky. |
| | 6 | 932 | 39·2 | 35·0 | 4·2 | 1·7 | 1·2 | 24 | | 1·5 | Cirro-cumuli; cirro-strati near horizon. |

The direction of the wind is indicated by the number of the point of the compass, reckoning N. = 0, E. = 8, S. = 16, W. = 24. The motions of the three strata of clouds, Sc. (scud), C.-s. (cirro-stratus), and Cir. (cirrus), are indicated in a similar manner.

Nov. 8d 5h. Observation made at 5h 10m.

Nov. 11d 4h. A chain of cirro-stratus, extending from NNW. to NE. in the form of bags below, and a sheet of cirrus above; the bags rather inclining to E.; depth about 7°.

| Gött. Mean Time. | | Barometer at 32°. | Thermometers. Dry. | Wet. | Diff. | Wind. Maximum force in 1h. | 10m. | From | Clouds, Sc. : C.-s. : Ci., moving from | Sky clouded. | Species of Clouds and Meteorological Remarks. |
|---|---|---|---|---|---|---|---|---|---|---|---|
| d. | h. | in. | ° | ° | ° | lbs. | lbs. | pt. | pt. pt. pt. | 0—10. | |
| 11 | 7 | 28·944 | 37·8 | 34·0 | 3·8 | 1·1 | 0·8 | 22 | | 0·5 | Cirro-strati to N.; faint aurora. |
| | 8 | 953 | 38·1 | 33·6 | 4·5 | 1·7 | 0·5 | 21 | | 0·8 | Id.; id. [aurora. |
| | 9 | 956 | 35·8 | 33·6 | 2·2 | 0·5 | 0·5 | 20 | | 0·8 | Id.; patches of thin clouds; very faint |
| | 10 | 958 | 35·4 | 33·2 | 2·2 | 0·6 | 0·3 | 21 | | 0·5 | Cirro-strati; faint auroral light. |
| | 11 | 969 | 36·3 | 34·7 | 1·6 | 0·7 | 0·2 | 20 | | 0·5 | Id.; id. |
| | 12 | 970 | 37·0 | 34·0 | 3·0 | 0·4 | 0·5 | 22 | | 1·0 | Id.; id.; scud to SE. |
| | 13 | 28·973 | 37·9 | 35·4 | 2·5 | 1·6 | 1·0 | 21 | | 4·0 | Dense clouds to N. and S.; hazy. |
| | 14 | 983 | 40·7 | 37·7 | 3·0 | 2·6 | 1·8 | 22 | | 9·9 | Auroral light seen through break to N. |
| | 15 | 28·993 | 40·2 | 37·8 | 2·4 | 2·5 | 1·5 | 23 | | 9·0 | Scud; drops of rain. |
| | 16 | 29·012 | 40·3 | 38·0 | 2·3 | 1·2 | 0·8 | 24 | | 10·0 | Id.; dark; showers$^{0·5}$ |
| | 17 | 030 | 40·7 | 39·2 | 1·5 | 0·7 | 0·7 | 23 | | 10·0 | Id.; rain$^{0·5}$ |
| | 18 | 048 | 40·9 | 38·3 | 2·6 | 0·7 | 0·4 | | | 10·0 | Id. |
| | 19 | 068 | 39·9 | 37·7 | 2·2 | 0·7 | 0·3 | 23 | | 9·5 | Sky to N. |
| | 20 | 091 | 39·8 | 37·7 | 2·1 | 0·2 | 0·0 | 22 | | 9·9 | Cirro-stratous scud; cirro-strati. |
| | 21 | 109 | 40·0 | 38·1 | 1·9 | 0·2 | 0·1 | 21 | | 10·0 | Homogeneous cirro-strati, broken to N. |
| | 22 | 120 | 41·5 | 39·5 | 2·0 | 0·2 | 0·2 | 18 | | 10·0 | Id. |
| | 23 | 129 | 41·9 | 39·6 | 2·3 | 0·2 | 0·1 | 22 | | 10·0 | Cirro-stratous scud; cirro-strati. |
| 12 | 0 | 119 | 42·7 | 40·2 | 2·5 | 0·2 | 0·1 | | | 10·0 | Cirro-cumuli; cirro-strati; cirrous haze; faint halo. ☉ |
| | 1 | 120 | 43·6 | 40·7 | 2·9 | 0·2 | 0·1 | 19 | | 10·0 | As before; haze becoming thicker; id. |
| | 2 | 105 | 43·5 | 41·0 | 2·5 | 0·2 | 0·1 | 20 | — : 22 : — | 10·0 | Thick semifluid cirro-strati. |
| | 3 | 098 | 42·6 | 40·6 | 2·0 | 0·1 | 0·0 | 16 | | 10·0 | Dense wavy cirro-strati and haze. |
| | 4 | 092 | 41·7 | 40·0 | 1·7 | 0·0 | 0·0 | 14 | | 10·0 | Dense homogeneous cirro-strati and haze. |
| | 5 | 085 | 40·0 | 38·1 | 1·9 | 0·1 | 0·0 | 16 | | 10·0 | Dense homogeneous mass; rain$^{1}$ |
| | 6 | 089 | 37·8 | 36·9 | 0·9 | 0·2 | 0·1 | | | 10·0 | Nearly as before; rain$^{0·2}$ |
| | 7 | 065 | 37·0 | 36·2 | 0·8 | 0·2 | 0·0 | | | 10·0 | Id. |
| | 8 | 046 | 37·6 | 36·9 | 0·7 | 0·2 | 0·1 | | | 10·0 | Id. |
| | 9 | 041 | 38·2 | 37·2 | 1·0 | 0·0 | 0·0 | | | 10·0 | Id.; dark. |
| | 10 | 048 | 38·3 | 37·7 | 0·6 | 0·1 | 0·1 | | | 10·0 | Id.; id. [9·0. |
| | 11 | 052 | 38·5 | 37·7 | 0·8 | 0·0 | 0·0 | 18 | — : 24 : — | 3·0 | Cir.-str. scud; sky clouded at 10h 57m, 9·8; 11h 10m, |
| | 12 | 057 | 42·0 | 41·3 | 0·7 | 0·2 | 0·2 | 18 | 24 : — : — | 9·9 | Scud; cirro-stratous scud. |
| | 13 | 29·075 | 44·3 | 43·3 | 1·0 | 0·4 | 0·4 | 22 | | 10·0 | Scud; rain$^{1}$ |
| | 14 | 100 | 44·3 | 43·3 | 1·0 | 0·2 | 0·2 | 21 | | 10·0 | Id.; id. |
| | 15 | 115 | 44·0 | 43·0 | 1·0 | 0·3 | 0·4 | 21 | | 10·0 | Id.; raining till lately. |
| | 16 | 128 | 43·1 | 42·0 | 1·1 | 0·3 | 0·0 | | | 9·9 | Id. |
| | 17 | 132 | 43·1 | 42·4 | 0·7 | 0·0 | 0·0 | | | 10·0 | Id.; showers. |
| | 18 | 142 | 43·0 | 42·3 | 0·7 | 0·0 | 0·0 | | | 9·2 | Cirro-stratous scud; scud; stars dim. |
| | 19 | 154 | 42·5 | 42·0 | 0·5 | 0·0 | 0·0 | 21 | | 10·0 | Id.; id. |
| | 20 | 166 | 41·7 | 41·2 | 0·5 | 0·0 | 0·0 | 16 | 24 : — : — | 10·0 | Scud; cirro-strati; cirrous mass. |
| | 21 | 190 | 42·1 | 41·6 | 0·5 | 0·1 | 0·0 | 4 | 6 : 22 : — | 10·0 | Misty scud; scud; cirro-strati. |
| | 22 | 203 | 41·2 | 40·2 | 1·0 | 0·2 | 0·3 | 4 | — : 21 : — | 10·0 | Cirro-stratous scud; scud; cirro-strati. |
| | 23 | 213 | 41·0 | 40·2 | 0·8 | 0·2 | 0·2 | 4 | 5 : 22 : — | 10·0 | Scud; rain$^{0·2}$ |
| 13 | 0 | 217 | 41·0 | 40·6 | 0·4 | 0·2 | 0·2 | 4 | 5 : — : — | 10·0 | Id.; id. |
| | 1 | 215 | 41·1 | 40·6 | 0·5 | 0·2 | 0·1 | 4 | | 10·0 | Nearly homogeneous; rain$^{0·2}$ |
| | 2 | 216 | 41·8 | 41·1 | 0·7 | 0·2 | 0·0 | 4 | | 10·0 | Id. |
| | 3 | 232 | 42·8 | 42·1 | 0·7 | 0·1 | 0·1 | 2 | — : 4 : — | 10·0 | Cirro-stratous scud; cirrous mass; rain$^{0·2}$ |
| | 4 | 256 | 42·5 | 42·0 | 0·5 | 0·0 | 0·0 | 14 | — : 20 : — | 10·0 | Id.; id.; rain$^{1·5}$ |
| | 5 | 266 | 41·3 | 41·0 | 0·3 | 0·0 | 0·0 | 20 | 20 : 20 : — | 9·9 | Scud; cirro-cumulo-strati; cirro-strati. |
| | 6 | 275 | 40·8 | 40·6 | 0·2 | 0·1 | 0·2 | 18 v. | | 9·2 | Id.; id. |
| | 7 | 301 | 46·7 | 45·6 | 1·1 | 0·5 | 0·3 | 18 | | 9·0 | Id.; 6h 58m shower$^{1}$ and overcast. |
| | 8 | 323 | 46·9 | 45·5 | 1·4 | 0·5 | 0·3 | 20 | | 10·0 | Id.; shower$^{0·8}$ |
| | 9 | 351 | 46·7 | 45·2 | 1·5 | 0·5 | 0·5 | 19 | | 9·8 | Id.; showers at intervals. |
| | 10 | 376 | 46·3 | 45·2 | 1·1 | 0·4 | 0·3 | 19 | | 8·0 | Id.; id. |
| | 11 | 401 | 46·4 | 45·1 | 1·3 | 0·5 | 0·4 | 20 | | 9·8 | Id.; rain$^{0·2}$ |
| | 12 | 425 | 46·7 | 45·6 | 1·1 | 1·0 | 0·8 | 20 | | 10·0 | Id.; rain$^{0·5}$ |
| | 13 | 29·444 | 44·8 | 43·7 | 1·1 | 1·4 | 0·6 | | | 0·5 | Scud. |

Nov. 12d 0h. Snow lying on Cheviot. 1h. The haze has a spotted woolly appearance, with fine lined or undulating cirro-strati interspersed.

Nov. 13d. A new vane erected, composed of four feathers from a turkey's tail; the vane is connected with an index by means of a light fir rod, which shows the direction on a compass card fixed on the ceiling; the direction of the wind is generally taken from this vane in future.

| Gött. Mean Time. | Barometer at 32°. | Thermometers. Dry. | Wet. | Diff. | Wind. Maximum force in 1h. | 10m. | From | Clouds, Sc. : C.-s. : Ci., moving from | Sky clouded. | Species of Clouds and Meteorological Remarks. |
|---|---|---|---|---|---|---|---|---|---|---|
| d. h. | in. | ° | ° | ° | lbs. | lbs. | pt. | pt. pt. pt. | 0—10. | |
| 13 14 | 29·471 | 46·6 | 44·6 | 2·0 | 1·7 | 0·6 | 19 | | 9·0 | Scud. |
| 15 | 507 | 46·0 | 44·7 | 1·3 | 0·9 | 0·1 | 24 | | 9·9 | Id. |
| 16 | 541 | 45·3 | 43·8 | 1·5 | 0·5 | 0·3 | 28 | | 10·0 | Id.; drops of rain. |
| 17 | 590 | 40·8 | 39·3 | 1·5 | 0·4 | 0·4 | 28 | | 3·5 | Id. |
| 18 | 644 | 40·6 | 39·6 | 1·0 | 0·9 | 0·1 | 22 | | 10·0 | Id. |
| 19 | 678 | 40·2 | 39·5 | 0·7 | 0·2 | 0·0 | 18 | 28 : — : — | 9·5 | Id. |
| 20 | 717 | 39·4 | 38·8 | 0·6 | 0·0 | 0·0 | 17 | 3 : — : — | 5·0 | Misty and cirro-stratous scud; cirri. |
| 21 | 758 | 39·9 | 39·0 | 0·9 | 0·0 | 0·1 | 17 | 3 : 26 : — | 9·5 | Id. cirro-cumulo-strati. |
| 22 | 801 | 42·1 | 41·1 | 1·0 | 0·0 | 0·0 | 30 | 4 : — : — | 9·9 | Misty scud; cirro-cumuli; cirro-strati. |
| 23 | 824 | 44·1 | 42·7 | 1·4 | 0·1 | 0·1 | 12 v. | — : 6 : — | 9·9 | Cirro-stratous scud. |
| 14 0 | 846 | 44·7 | 42·3 | 2·4 | 0·1 | 0·1 | 4 | | 10·0 | Id. |
| 1 | 855 | 45·2 | 41·2 | 4·0 | 0·1 | 0·2 | 8 | — : 6 : — | 10·0 | Id. |
| 2 | 879 | 45·5 | 41·4 | 4·1 | 0·2 | 0·1 | 7 | — : 6 : — | 9·9 | Id. |
| 3 | 878 | 45·1 | 41·1 | 4·0 | 0·2 | 0·1 | 6 | — : 6 : — | 9·9 | Id. |
| 4 | 886 | 44·3 | 41·0 | 3·3 | 0·1 | 0·1 | 7 | — : 7 : — | 9·8 | Id.; cirro-strati. |
| 5 | 905 | 43·6 | 40·6 | 3·0 | 0·1 | 0·0 | 6 | — : 8 : — | 9·9 | Id. |
| 6 | 906 | 42·5 | 40·3 | 2·2 | 0·0 | 0·0 | 10 | | 10·0 | Id. |
| 7 | 907 | 42·0 | 40·0 | 2·0 | 0·0 | 0·0 | 11 | | 10·0 | Id. |
| 8 | 902 | 41·6 | 39·4 | 2·2 | 0·1 | 0·0 | | | 9·8 | Id. |
| 9 | 898 | 38·1 | 37·0 | 1·1 | 0·0 | 0·0 | | | 2·5 | Thin clouds; stars dim. |
| 10 | 889 | 37·9 | 36·8 | 1·1 | 0·0 | 0·0 | 3 | | 2·0 | Id.; id. |
| 11 | 882 | 35·6 | 35·0 | 0·6 | 0·0 | 0·0 | 0 | | 2·0 | Id.; id. |
| 12 | 845 | 36·9 | 36·0 | 0·9 | 0·0 | 0·0 | 27 | | 10·0 | Dark. |
| 13 | 29·810 | 38·1 | 37·3 | 0·8 | 0·0 | 0·0 | 9 | | 10·0 | Dark. |
| 14 | 771 | 43·7 | 41·8 | 1·9 | 0·2 | 0·3 | 12 | | 10·0 | Very dark. |
| 15 | 715 | 44·8 | 43·2 | 1·6 | 0·3 | 0·3 | 15 | | 10·0 | Id. |
| 16 | 655 | 45·0 | 43·6 | 1·4 | 0·2 | 0·0 | 20 | | 10·0 | Id. |
| 17 | 597 | 46·1 | 45·1 | 1·0 | 0·5 | 0·5 | 17 | | 10·0 | Id.; rain$^{0\cdot2}$ |
| 18 | 536 | 46·9 | 46·0 | 0·9 | 0·5 | 0·2 | 22 | | 10·0 | Scud; shower$^{2}$ since last observation. |
| 19 | 475 | 50·7 | 50·1 | 0·6 | 1·0 | 0·7 | 18 | | 10·0 | Rain$^{2}$ |
| 20 | 414 | 53·7 | 53·0 | 0·7 | 2·2 | 1·9 | 18 | 19 : — : — | 10·0 | Scud; rain$^{1-3}$ |
| 21 | 393 | 54·7 | 53·3 | 1·4 | 4·0 | 3·0 | 19 | | 10·0 | Id.; rain$^{1-2}$ |
| 22 | 393 | 54·1 | 52·9 | 1·2 | 4·0 | 2·3 | 18 | 20 : — : — | 10·0 | Id.; id. |
| 23 | 425 | 51·7 | 50·1 | 1·6 | 3·4 | 0·6 | 19 | | 10·0 | Rain$^{2-5}$ since 22h. |
| 15 0 | 434 | 51·9 | 50·1 | 1·8 | 0·8 | 0·4 | 19 | 21 : 22 : — | 10·0 | Scud; cirro-stratous scud; fair since 22h 30m. |
| 1 | 417 | 52·1 | 49·0 | 3·1 | 2·5 | 2·8 | 22 | 24 : 22 : 22 | 7·5 | Id.; cirro-cumulous scud; cirri; cirro-strati. ⊖ |
| 2 | 448 | 54·0 | 50·0 | 4·0 | 2·9 | 1·4 | 23 | 23 : 22 : — | 7·0 | Id.; cirro-strati, &c. ⊙ |
| 3 | 459 | 51·8 | 47·1 | 4·7 | 2·7 | 0·8 | 21 | 23 : — : 22 | 5·0 | Id.; woolly cirri; cirro-strati. ⊖ |
| 4 | 470 | 51·2 | 46·9 | 4·3 | 2·6 | 1·3 | 20 | 24 : — : — | 7·5 | Id.; cirro-strati, &c. |
| 5 | 485 | 51·3 | 46·7 | 4·6 | 2·1 | 1·4 | 20 | 24 : — : — | 10·0 | Id. |
| 6 | 509 | 51·1 | 46·3 | 4·8 | 4·5 | 2·5 | 21 | | 2·0 | Id.; cirro-strati; cirri; lunar corona. ☽ |
| 7 | 514 | 51·2 | 46·9 | 4·3 | 2·2 | 1·8 | 20 | | 3·5 | Id.; id. |
| 8 | 517 | 51·7 | 47·7 | 4·0 | 2·5 | 2·0 | 20 | | 10·0 | Id. |
| 9 | 541 | 51·2 | 48·1 | 3·1 | 3·3 | 1·9 | 20 | | 4·0 | Id.; stars dim. ☽ |
| 10 | 584 | 50·2 | 47·2 | 3·0 | 1·7 | 1·0 | 21 | | 4·0 | Id.; id. |
| 11 | 603 | 50·7 | 47·4 | 3·3 | 1·6 | 1·8 | 21 | | 2·0 | Id.; cirri; stars dim. |
| 12 | 629 | 51·2 | 48·3 | 2·9 | 2·6 | 0·8 | 21 | | 8·0 | Id. |
| 13 | 29·647 | 51·4 | 49·3 | 2·1 | 1·2 | 0·5 | 21 | | 10·0 | Scud; rain$^{0\cdot2}$, just commenced. |
| 14 | 684 | 50·8 | 48·7 | 2·1 | 1·1 | 0·7 | 21 | | 5·5 | Id. |
| 15 | 708 | 50·1 | 48·2 | 1·9 | 0·9 | 0·3 | 21 | | 5·8 | Id. |
| 16 | 737 | 50·8 | 48·6 | 2·2 | 0·4 | 0·2 | 14 | | 9·2 | Id. |
| 17 | 750 | 51·7 | 49·1 | 2·6 | 1·3 | 1·0 | 20 | | 7·0 | Id. |
| 18 | 774 | 52·7 | 50·1 | 2·6 | 1·6 | 0·9 | 20 | | 9·8 | Id. |
| 19 | 784 | 51·8 | 49·7 | 2·1 | 1·2 | 0·8 | 20 | | 9·5 | Id.; cirro-cumuli; cirro-strati. |
| 20 | 792 | 52·2 | 50·0 | 2·2 | 1·5 | 0·5 | 19 | 26 : — : — | 10·0 | Id.; id.; id. |
| 21 | 814 | 50·0 | 48·2 | 1·8 | 0·9 | 0·5 | 19 | 23 : 25 : — | 10·0 | Loose scud; cirro-stratous scud. |

The direction of the wind is indicated by the number of the point of the compass, reckoning N. = 0, E. = 8, S. = 16, W. = 24. The motions of the three strata of clouds, Sc. (scud), C.-s. (cirro-stratus), and Cir. (cirrus), are indicated in a similar manner.

| Gött. Mean Time. | | Barometer at 32°. | Thermometers. Dry. | Wet. | Diff. | Wind. Maximum force in 1h. | 10m. | From | Clouds, Sc. : C.-s. : Ci., moving from | Sky clouded. | Species of Clouds and Meteorological Remarks. |
|---|---|---|---|---|---|---|---|---|---|---|---|
| d. | h. | in. | ° | ° | ° | lbs. | lbs. | pt. | pt. pt. pt. | 0—10. | |
| 15 | 22 | 29·841 | 50·4 | 48·7 | 1·7 | 1·2 | 1·1 | 18 | 25 : — : — | 9·5 | Loose scud ; cirro-stratous scud. |
| | 23 | 857 | 51·3 | 49·2 | 2·1 | 1·3 | 1·2 | 20 | 22 : 26 : — | 9·8 | Scud ; cirro-cumulous scud ; cirro-strati. |
| 16 | 0 | 876 | 53·4 | 50·0 | 3·4 | 1·7 | 0·8 | 20 | — : 26 : — | 8·0 | Id. ; id. ; id. |
| | 1 | 878 | 53·4 | 49·9 | 3·5 | 1·5 | 0·9 | 22 | 20 : 26 : — | 8·0 | Id. ; cirro-cumulo-strati ; id. ; cirri. |
| | 2 | 867 | 53·0 | 49·8 | 3·2 | 1·8 | 1·1 | 20 | 22 : 24 : — | 9·0 | Loose scud ; cirro-cumuli ; cirri ; cirro-strati. |
| | 3 | 857 | 51·2 | 48·3 | 2·9 | 0·7 | 0·4 | | | 8·0 | Scud ; fine cirro-strati. |
| | 4 | 861 | 51·0 | 48·2 | 2·8 | 0·2 | 0·4 | 19 | | 9·5 | Fine cir.-cum. ; linear cirri below ; piles of cir.-str. |
| | 5 | 885 | 50·3 | 48·0 | 2·3 | 1·0 | 0·8 | 18 | | 9·8 | Cirro-cumuli ; wavy cirro-strati tinged red. |
| | 6 | 898 | 49·7 | 47·2 | 2·5 | 1·7 | 0·9 | 19 | | 9·8 | Cirro-strati ; cirri ; cirro-cumuli. |
| | 7 | 909 | 50·0 | 47·6 | 2·4 | 1·3 | 0·5 | 20 | | 9·9 | As before. |
| | 8 | 917 | 48·7 | 46·4 | 2·3 | 1·5 | 1·3 | 21 | | 8·8 | Cirri ; lunar corona. ☽ |
| | 9 | 900 | 48·0 | 45·7 | 2·3 | 1·5 | 1·4 | 20 | | 5·5 | Id. ; cirro-strati ; lunar corona. ☽ |
| | 10 | 904 | 48·4 | 46·6 | 1·8 | 1·5 | 1·0 | 20 | | 9·9 | Id. ; id. ; cirrous haze ; auroral light ? |
| | 11 | 888 | 50·2 | 48·7 | 1·5 | 1·1 | 1·1 | 20 | | 4·0 | Cirro-strati, cirri, and scud ; aurora. |
| | 12 | 901 | 51·1 | 49·9 | 1·2 | 1·6 | 1·0 | 20 | | 10·0 | Thick cirro-strati ; auroral light on N. horizon ? |
| 17 | 1 | 29·954 | 54·8 | 52·2 | 2·6 | 2·0 | 0·9 | 20 | 20 : 24 : — | ..... | Sunday—Cloudy ; patches of loose scud ; cirro-strati, cirro-cumuli. |
| | 13 | 29·875 | 50·4 | 47·0 | 3·4 | 2·8 | 0·8 | 20 | | 1·0 | Clouds on horizon. |
| | 14 | 851 | 49·3 | 46·3 | 3·0 | 1·7 | 2·3 | 18 | | 1·0 | Id. |
| | 15 | 855 | 49·3 | 46·5 | 2·8 | 2·5 | 1·2 | 20 | | 1·0 | Id. |
| | 16 | 859 | 49·1 | 46·8 | 2·3 | 1·7 | 1·2 | 20 | | 0·5 | Clouds on E. horizon. |
| | 17 | 863 | 48·8 | 47·2 | 1·6 | 1·2 | 0·4 | 18 | | 5·0 | Scud. |
| | 18 | 859 | 50·4 | 48·8 | 1·6 | 1·6 | 1·1 | 20 | | 10·0 | Id. |
| | 19 | 847 | 50·9 | 48·8 | 2·1 | 2·9 | 1·6 | 19 | | 9·9 | Loose scud. |
| | 20 | 841 | 50·6 | 48·6 | 2·0 | 2·0 | 1·3 | 20 | 21 : — : — | 9·8 | Id. |
| | 21 | 863 | 50·7 | 48·5 | 2·2 | 2·8 | 1·0 | 20 | 20 : — : — | 9·9 | Id. ; cumuli on SE. horizon. |
| | 22 | 858 | 51·2 | 49·0 | 2·2 | 2·4 | 1·9 | 20 | 20 : — : — | 9·9 | Id. |
| | 23 | 859 | 52·0 | 49·2 | 2·8 | 2·3 | 1·3 | 19 | 20 : — : — | 9·8 | Id. |
| 18 | 0 | 859 | 51·9 | 48·9 | 3·0 | 3·2 | 1·1 | 20 | | 9·9 | Id. |
| | 1 | 833 | 52·0 | 49·2 | 2·8 | 1·8 | 2·4 | 20 | 20 : — : 20 | 9·5 | Scud ; cirro-stratous scud ; woolly cirri. |
| | 2 | 828 | 51·0 | 48·2 | 2·8 | 2·3 | 2·2 | 20 | 20 : 20 : — | 9·8 | Id. ; cirro-strati ; cirro-cumuli. |
| | 3 | 817 | 51·0 | 48·2 | 2·8 | 2·0 | 0·1 | 20 | 20 : — : — | 9·8 | Id. |
| | 4 | 797 | 50·9 | 48·0 | 2·9 | 1·5 | 0·6 | 22 | 20 : — : — | 9·8 | Id. |
| | 5 | 768 | 50·1 | 47·6 | 2·5 | 1·0 | 2·1 | 20 | 20 : — : — | 4·0 | Loose scud ; cirro-stratous scud ; thin cirri to W. ☽ |
| | 6 | 767 | 50·5 | 47·9 | 2·6 | 4·3 | 4·2 | 20 | 20 : — : — | 10·0 | Id. ; id. ☽ |
| | 7 | 772 | 50·4 | 48·0 | 2·4 | 2·4 | 1·8 | 20 | | 10·0 | Scud ; cirro-strati. ☽ |
| | 8 | 759 | 50·4 | 47·9 | 2·5 | 2·3 | 2·0 | 20 | | 10·0 | Id. |
| | 9 | 770 | 50·7 | 48·4 | 2·3 | 1·5 | 1·1 | 18 | | 10·0 | Id. |
| | 10 | 764 | 51·3 | 48·9 | 2·4 | 1·3 | 0·8 | 20 | | 10·0 | Id. |
| | 11 | 759 | 51·4 | 49·0 | 2·4 | 1·2 | 1·5 | 20 | | 10·0 | Id. ; a few light drops of rain. |
| | 12 | 744 | 51·6 | 49·2 | 2·4 | 2·7 | 2·3 | 19 | | 10·0 | Id. |
| | 13 | 29·722 | 51·4 | 49·0 | 2·4 | 4·0 | 2·2 | 19 | | 10·0 | Scud. |
| | 14 | 718 | 51·6 | 49·4 | 2·2 | 2·4 | 2·0 | 19 | | 9·0 | Cirro-stratous scud ? |
| | 15 | 732 | 51·7 | 49·6 | 2·1 | 2·3 | 1·8 | 20 | | 9·5 | Scud ; drops of rain. |
| | 16 | 736 | 51·8 | 49·8 | 2·0 | 1·8 | 1·7 | 20 | | 10·0 | Id. ; id. |
| | 17 | 744 | 51·5 | 49·7 | 1·8 | 1·4 | 1·2 | 20 | | 10·0 | Id. |
| | 18 | 746 | 51·2 | 49·8 | 1·4 | 1·5 | 1·1 | 19 | | 9·8 | Id. ; rain$^{0·2}$ |
| | 19 | 762 | 51·7 | 50·0 | 1·7 | 1·3 | 0·5 | 20 | | 10·0 | Id. |
| | 20 | 782 | 51·7 | 50·3 | 1·4 | 0·5 | 0·5 | 20 | 21 : — : — | 10·0 | Id. |
| | 21 | 795 | 50·6 | 49·9 | 0·7 | 0·5 | 0·4 | 20 | 22 : 22 : — | 8·0 | Patches of scud ; cirro-strati ; cirro-cumuli ; cirri. |
| | 22 | 816 | 51·2 | 50·3 | 0·9 | 0·5 | 0·2 | 20 | 20 : 22 : — | 9·5 | Scud ; cirro-cumuli ; cirro-strati ; cirri. |
| | 23 | 837 | 51·0 | 50·2 | 0·8 | 0·2 | 0·1 | 22 | 20 : 22 : — | 9·5 | As before. |
| 19 | 0 | 841 | 51·8 | 50·2 | 1·6 | 0·2 | 0·1 | 22 | — : 21 : — | 9·0 | Cirro-cumulous scud ; loose scud on S. hor. ; cir.-str. |
| | 1 | 846 | 53·0 | 50·8 | 2·2 | 0·0 | 0·1 | 20 | — : 21 : — | 8·5 | Id. ; loose scud and cumuli. ⊖ |
| | 2 | 856 | 53·0 | 50·0 | 3·0 | 0·1 | 0·1 | 1 | — : 21 : — | 9·0 | Id. ; id. ⊖ |
| | 3 | 853 | 51·2 | 49·0 | 2·2 | 0·1 | 0·1 | 31 | 20 : 20 : 20 | 8·5 | Scud ; loose cumuli ; woolly cirri ; cirro-strati. ● |

Nov. 15d 23h 35m. Several thin sheets of dark reticulated and arborescent cloud below the cirro-cumulous scud.

Nov. 16d 3h. Thick mass of fine cirro-cumuli, with streaks of linear cirri below, and tiers of cirro-strati, 5 or 6 in an isolated pile; cirro-strati in wavy and mottled bands to S.

Nov. 17d 1h. Observation made at 1h 30m.

| Gött. Mean Time. | | Barometer at 32°. | Thermometers. Dry. | Wet. | Diff. | Wind. Maximum force in 1h. | 10m. | From | Clouds, Sc. : C.-s. : Ci., moving from | Sky clouded. | Species of Clouds and Meteorological Remarks. |
|---|---|---|---|---|---|---|---|---|---|---|---|
| d. | h. | in. | ° | ° | ° | lbs. | lbs. | pt. | pt. pt. pt. | 0—10. | |
| 19 | 4 | 29·865 | 49·4 | 48·0 | 1·4 | 0·2 | 0·0 | | — : 19 : — | 9·0 | Cirro-stratous scud ; cirri ; cirro-strati. |
| | 5 | 858 | 47·0 | 46·2 | 0·8 | 0·1 | 0·1 | 16 v. | | 9·9 | Id. ; id. |
| | 6 | 853 | 47·1 | 46·4 | 0·7 | 0·0 | 0·0 | 26 | | 10·0 | As before. |
| | 7 | 848 | 46·8 | 45·9 | 0·9 | 0·0 | 0·0 | 30 | | 10·0 | Cirro-strati ; cirri. |
| | 8 | 834 | 47·3 | 46·7 | 0·6 | 0·1 | 0·0 | 2 | | 10·0 | Homogeneous ; rain$^{0·8}$ |
| | 9 | 809 | 47·3 | 46·8 | 0·5 | 0·0 | 0·0 | 0 | | 10·0 | Id. ; rain$^{0·2}$ |
| | 10 | 785 | 47·7 | 47·2 | 0·5 | 0·0 | 0·0 | 30 | | 10·0 | Cirro-strati ? clouds broken ; rain$^{0·5}$ |
| | 11 | 738 | 50·1 | 49·6 | 0·5 | 0·1 | 0·1 | 16 | | 10·0 | Id. ; id. ; rain$^{0·2}$ |
| | 12 | 727 | 51·3 | 50·4 | 0·9 | 0·4 | 0·1 | 26 | | 10·0 | Id. ; id. |
| | 13 | 29·699 | 50·6 | 49·9 | 0·7 | 0·4 | 0·0 | | | 10·0 | Thick scud ; cirro-strati ; clouds broken. |
| | 14 | 676 | 51·1 | 50·1 | 1·0 | 0·5 | 0·3 | 16 | | 10·0 | The same. |
| | 15 | 662 | 51·3 | 50·1 | 1·2 | 0·7 | 0·2 | 16 | | 10·0 | Id. ; dark. |
| | 16 | 645 | 50·6 | 49·3 | 1·3 | 0·7 | 0·5 | 18 | | 10·0 | Id. ; id. ; rain$^{0·2}$ |
| | 17 | 622 | 50·7 | 49·5 | 1·2 | 1·0 | 0·3 | 17 | | 10·0 | Id. ; id. ; id. |
| | 18 | 600 | 52·0 | 50·4 | 1·6 | 1·0 | 0·9 | 19 | | 10·0 | Id. ; id. ; id. |
| | 19 | 606 | 52·2 | 50·7 | 1·5 | 2·0 | 1·0 | 20 | | 10·0 | Scud and cirro-strati. |
| | 20 | 635 | 52·2 | 50·5 | 1·7 | 0·9 | 0·1 | 24 | 25 : — : — | 10·0 | Scud ; cirro-strati. |
| | 21 | 671 | 52·0 | 48·5 | 3·5 | 0·3 | 0·4 | 24 | 26 : — : — | 9·8 | Id. ; id. |
| | 22 | 698 | 51·4 | 47·4 | 4·0 | 0·9 | 0·6 | 25 | — : 22 : — | 7·0 | Large cirro-cumuli, lying NE. to SW ; cirro-strati. ⊖ |
| | 23 | 729 | 50·7 | 47·6 | 3·1 | 1·3 | 1·0 | 25 | 26 : 24 : — | 6·5 | Scud ; cirro-cumuli ; cirro-strati ; cirri. ⊙ |
| 20 | 0 | 755 | 51·0 | 49·2 | 1·8 | 1·4 | 1·0 | 20 | 26 : — : — | 1·2 | Id. ; cumuli to N. ; cirro-strati to E. ⊙ |
| | 1 | 776 | 51·0 | 47·0 | 4·0 | 1·4 | 1·1 | 23 | 25 : — : — | 4·5 | Id. ; cumuli to S. ⊖ |
| | 2 | 793 | 49·7 | 44·7 | 5·0 | 2·0 | 0·6 | 22 | 24 : — : — | 2·5 | Cirro-stratous scud ; cirri ; cirro-strati ; cumuli to S. ⊖ |
| | 3 | 828 | 48·9 | 43·8 | 5·1 | 0·8 | 0·7 | 22 | | 1·0 | Cirro-strati ; cirri to S. ; scud to N. ⊖ |
| | 4 | 856 | 45·2 | 42·2 | 3·0 | 0·6 | 0·3 | 20 | | 1·0 | Id. ; id. ; haze on E. horizon. |
| | 5 | 868 | 43·3 | 41·8 | 1·5 | 0·3 | 0·2 | 19 | | 0·3 | Cirro-strati. |
| | 6 | 878 | 41·8 | 39·5 | 2·3 | 0·5 | 0·2 | 20 | | 0·1 | Patches of cirro-strati on horizon. ☽ |
| | 7 | 903 | 41·8 | 39·6 | 2·2 | 0·4 | 0·2 | 19 | | 0·0 | Clear. ☽ |
| | 8 | 918 | 42·2 | 40·0 | 2·2 | 0·4 | 0·1 | 20 | | 0·2 | Cirro-strati to SE. ☽ |
| | 9 | 941 | 42·0 | 40·1 | 1·9 | 0·4 | 0·0 | 22 | | 0·0 | Clear. ☽ |
| | 10 | 941 | 43·3 | 41·0 | 2·3 | 0·7 | 0·5 | 21 | | 0·2 | Thin cirri and haze ; lunar corona. ☽ |
| | 11 | 959 | 43·4 | 41·0 | 2·4 | 0·6 | 0·5 | 26 | | 0·2 | Id. ; id. ☽ |
| | 12 | 993 | 42·9 | 41·0 | 1·9 | 0·4 | 0·5 | 22 | | 0·2 | Id. ; id. ☽ |
| | 13 | 30·000 | 42·9 | 40·9 | 2·0 | 0·5 | 0·5 | 26 | | 0·2 | Thin cirri and haze ; lunar corona. ☽ |
| | 14 | 009 | 42·2 | 40·3 | 1·9 | 0·4 | 0·3 | 24 | | 0·2 | Id. ; cir.-str. to W. ; lunar corona. ☽ |
| | 15 | 024 | 39·5 | 38·2 | 1·3 | 0·4 | 0·1 | 18 | | 0·2 | Band of cirro-strati to W. ; id. ☽ |
| | 16 | 019 | 39·4 | 38·3 | 1·1 | 0·3 | 0·1 | 17 | | 0·2 | Cirro-strati ; haze on horizon. ☽ |
| | 17 | 052 | 36·0 | 35·4 | 0·6 | 0·2 | 0·1 | 26 | | 0·2 | Id. ; id. |
| | 18 | 062 | 34·4 | 34·0 | 0·4 | 0·1 | 0·1 | 20 | | 0·2 | Id. ; id. |
| | 19 | 063 | 36·8 | 35·9 | 0·9 | 0·2 | 0·1 | 20 | | 0·2 | Cirro-strati on horizon. |
| | 20 | 068 | 36·7 | 36·0 | 0·7 | 0·2 | 0·1 | 16 | — : 28 : — | 3·0 | Cirro-cumuli ; cirri ; cirro-strati. |
| | 21 | 102 | 35·4 | 34·8 | 0·6 | 0·2 | 0·1 | 20 | — : 27 : — | 6·0 | Id. ; cirro-cumulo-strati ; cir.-str. ; cirri. ◐ |
| | 22 | 109 | 39·7 | 38·5 | 1·2 | 0·1 | 0·0 | 12 | 28 : 28 : — | 7·0 | Scud to W. ; cirro-cumuli ; cirri. ⊙ |
| | 23 | 110 | 40·9 | 39·9 | 1·0 | 0·0 | 0·0 | 18 | — : 28 : — | 6·5 | Cirro-cumuli ; cirro-strati ; cirri ; scud on Cheviot. |
| 21 | 0 | 112 | 43·0 | 41·9 | 1·1 | 0·0 | 0·0 | 14 | | 4·0 | Cirri ; cirro-strati. ⊙ |
| | 1 | 110 | 46·6 | 44·7 | 1·9 | 0·2 | 0·1 | 18 | 24 : 28 : — | 7·0 | Loose scud ; cirro-cumuli ; cirri. |
| | 2 | 106 | 48·3 | 45·6 | 2·7 | 0·2 | 0·0 | 27 | 24 : 27 : — | 7·5 | Scud ; cirro-cumuli. |
| | 3 | 096 | 48·4 | 45·3 | 3·1 | 0·1 | 0·0 | 22 | 23 : 26 : — | 5·5 | Id. ; id. ⊙ |
| | 4 | 090 | 43·9 | 42·8 | 1·1 | 0·1 | 0·0 | 16 | 22 : — : — | 1·0 | Id. ; cirro-strati ; cirri. ⊙ |
| | 5 | 090 | 41·1 | 40·5 | 0·6 | 0·0 | 0·0 | 20 | 24 : — : — | 4·0 | Id. ; cirro-cumulous scud. |
| | 6 | 098 | 37·7 | 36·2 | 1·5 | 0·1 | 0·1 | 16 | | 1·0 | Id. ; id. ☽ |
| | 7 | 094 | 35·6 | 35·1 | 0·5 | 0·1 | 0·0 | 16 | | 0·3 | Cirro-cumuli to W. ☽ |
| | 8 | 089 | 37·4 | 37·1 | 0·3 | 0·4 | 0·2 | 20 | 22 : — : — | 3·5 | Loose misty scud to S., moving quickly. ☽ |
| | 9 | 095 | 35·0 | 34·6 | 0·4 | 0·2 | 0·0 | | | 0·4 | Cirro-strati to SW. ; mist on the ground. ☽ |
| | 10 | 096 | 32·9 | 32·6 | 0·3 | 0·0 | 0·0 | 28 | | 1·0 | Cirro-strati ; strati ; lunar corona caused by the mist. ☽ |
| | 11 | 107 | 31·5 | 31·3 | 0·2 | 0·0 | 0·0 | 20 | | 1·5 | Stratus ; cirri ; patches of nebulous cirri. ☽ |

Nov. 20d 3h. Cirro-cumulous scud in very small patches at considerable distances from each other moving from W., covering a considerable extent of sky : cirri in feathers, and cirro-strati with mottled edges.
Nov. 21d 8h. Mist flying very low and quickly, producing a coloured lunar corona.
Nov. 21d 11h. Nebulous patches of cirri, very stationary.

| Gött. Mean Time. | Baro-meter at 32°. | Thermometers. Dry. | Wet. | Diff. | Wind. Maximum force in 1h. | 10m. | From | Clouds, Sc. : C.-s. : Ci., moving from | Sky clouded. | Species of Clouds and Meteorological Remarks. |
|---|---|---|---|---|---|---|---|---|---|---|
| d. h. | in. | ° | ° | ° | lbs. | lbs. | pt. | pt. pt. pt. | 0—10. | |
| 21 12 | 30·104 | 30·6 | 30·3 | 0·3 | 0·0 | 0·0 | 20 | | 1·5 | As before; strati around; lunar corona. ☽ |
| 13 | 30·102 | 30·4 | ... | ... | 0·0 | 0·0 | 20 | | 1·5 | As before; density of fog variable; lunar corona. ☽ |
| 14 | 092 | 28·3 | ... | ... | 0·0 | 0·0 | 20 | | 4·5 | Stratus; barred cirri; bluish lunar corona. ☽ |
| 15 | 083 | 29·3 | 29·2 | 0·1 | 0·1 | 0·0 | 18 | | 4·0 | As before. ☽ |
| 16 | 073 | 29·2 | ... | ... | 0·1 | 0·1 | 19 | | 3·5 | Stratus gone; cirri as before. ☽ |
| 17 | 067 | 27·6 | ... | ... | 0·0 | 0·0 | 23 | | 2·0 | Cirri; cirrous haze; irregular lunar corona. ☽ |
| 18 | 067 | 28·3 | ... | ... | 0·0 | 0·1 | 18 | | 1·5 | Cirro-strati; cirri. |
| 19 | 063 | 27·0 | ... | ... | 0·0 | 0·0 | | | 3·0 | Cirro-cumulo-strati; much hoar-frost. |
| 20 | 065 | 28·6 | ... | ... | 0·0 | 0·0 | 20 | —:16:— | 6·0 | Id., scarcely moving. |
| 21 | 066 | 29·0 | ... | ... | 0·1 | 0·1 | 21 | —:16:— | 8·0 | Id., radiating from SSW. and NNE. ⊙ |
| 22 | 057 | 30·9 | 30·7 | 0·2 | 0·1 | 0·0 | 19 | —:18:— | 8·0 | Id., id. |
| 23 | 052 | 32·0 | 31·7 | 0·3 | 0·1 | 0·0 | 22 | | 9·0 | Id. ⊙ |
| 22 0 | 034 | 34·2 | 33·3 | 0·9 | 0·1 | 0·0 | 23 | —:16:— | 9·0 | Id.; scud; cirro-strati. |
| 1 | 024 | 35·4 | 34·0 | 1·4 | 0·2 | 0·1 | 25 | —:16:— | 9·5 | Id.; id.; id.; haze. |
| 2 | 30·004 | 38·2 | 37·2 | 1·0 | 0·1 | 0·0 | 22 | —:16:— | 9·0 | Id.; id.; cirri; cirro-strati; haze. |
| 3 | 29·988 | 36·9 | 36·0 | 0·9 | 0·1 | 0·0 | 24 | —:16:— | 8·0 | Id.; id. |
| 4 | 978 | 38·0 | 37·0 | 1·0 | 0·1 | 0·1 | 18 | —:16:20 | 6·0 | Id.; woolly cirri; cirro-strati; scud. |
| 5 | 970 | 36·7 | 35·7 | 1·0 | 0·2 | 0·0 | 18 | | 3·0 | Cirro-cumuli; cirro-cumulo-strati. |
| 6 | 969 | 34·4 | 33·7 | 0·7 | 0·1 | 0·1 | 16 | | 3·5 | Id.; id.; cirro-strati. ☽ |
| 7 | 962 | 35·0 | 34·1 | 0·9 | 0·3 | 0·0 | 10 | | 2·5 | Cirro-cumuli; cirri. ☽ |
| 8 | 961 | 34·0 | 33·2 | 0·8 | 0·3 | 0·3 | 16 | | 5·5 | Thin cirri; watery cirri; cirro-cumuli. ☽ |
| 9 | 952 | 35·0 | 34·0 | 1·0 | 1·0 | 0·0 | 16 | —:—:16 | 6·5 | Woolly cirri. ☽ |
| 10 | 950 | 33·2 | 32·6 | 0·6 | 0·2 | 0·0 | 17 | | 3·8 | Id.; cirro-cumuli. ☽ |
| 11 | 934 | 34·7 | 33·6 | 1·1 | 0·2 | 0·0 | 22 | 17:—:— | 7·3 | Patches of scud; woolly, linear, and watery cirri. ☽ |
| 12 | 929 | 36·5 | 35·0 | 1·5 | 0·2 | 0·3 | 17 | | 9·9 | Scud; cirro-strati. |
| 13 | 29·912 | 38·6 | 36·6 | 2·0 | 0·3 | 0·1 | 16 | | 10·0 | Scud; cirro-strati. |
| 14 | 907 | 39·6 | 37·2 | 2·4 | 0·5 | 0·2 | 16 | | 10·0 | Id.; id. |
| 15 | 894 | 39·6 | 37·1 | 2·5 | 0·3 | 0·0 | | | 9·8 | Id.; cirro-cumuli; cirro-strati. |
| 16 | 864 | 38·5 | 36·2 | 2·3 | 0·5 | 0·2 | 20 | | 9·8 | The same. |
| 17 | 856 | 40·1 | 37·0 | 3·1 | 0·3 | 0·0 | 12 | | 9·7 | Cirro-strati; cirro-cumuli. |
| 18 | 854 | 38·5 | 36·4 | 2·1 | 0·3 | 0·1 | 16 | 16:—:— | 9·0 | Patches of scud; cirro-cumulo-strati. ☽ |
| 19 | 841 | 37·1 | 35·2 | 1·9 | 0·5 | 0·3 | 17 | | 1·5 | Scud, cirro-strati, cirri, on horizon. |
| 20 | 841 | 38·0 | 35·9 | 2·1 | 1·4 | 0·4 | 18 | —:18:— | 4·0 | Loose and wavy cirro-strati; woolly cirri; scud to E. |
| 21 | 840 | 38·2 | 36·5 | 1·7 | 0·5 | 0·3 | 17 | —:20:— | 9·5 | Cirro-stratous scud; cirro-strati; wavy cirro-strati. |
| 22 | 841 | 40·4 | 38·1 | 2·3 | 0·5 | 0·5 | 17 | —:20:— | 10·0 | Id.; id.; scud. |
| 23 | 849 | 41·9 | 39·5 | 2·4 | 0·5 | 0·3 | 18 | —:18:— | 9·9 | Id.; id.; cum. on ESE. hor. |
| 23 0 | 841 | 43·0 | 40·8 | 2·2 | 0·3 | 0·2 | 18 | —:18:— | 10·0 | Nearly as before; tendency to rain. |
| 1 | 842 | 43·6 | 41·2 | 2·4 | 0·3 | 0·5 | 18 | | 10·0 | Id. |
| 2 | 850 | 43·5 | 41·2 | 2·3 | 0·7 | 0·8 | 17 | | 10·0 | Id. |
| 3 | 861 | 42·5 | 40·7 | 1·8 | 0·9 | 0·1 | 18 | | 10·0 | Nearly homogeneous; Scotch mist. |
| 4 | 866 | 42·5 | 41·0 | 1·5 | 0·3 | 0·2 | 18 | | 10·0 | Homogeneous; cirro-strati, coloured; misty. |
| 5 | 886 | 42·3 | 41·0 | 1·3 | 0·3 | 0·1 | 18 | | 10·0 | Id.; id. |
| 6 | 891 | 42·3 | 41·0 | 1·3 | 0·2 | 0·0 | | | 10·0 | Scud; cirro-strati. |
| 7 | 905 | 42·4 | 41·1 | 1·3 | 0·1 | 0·0 | 18 | | 9·9 | Id.; id. |
| 8 | 904 | 41·2 | 40·2 | 1·0 | 0·0 | 0·0 | | —:20:— | 9·7 | Cirro-cumulo-strati.* ☽ |
| 9 | 909 | 38·0 | 37·7 | 0·3 | 0·1 | 0·1 | 22 | | 9·0 | Id. |
| 10 | 912 | 38·7 | 38·2 | 0·5 | 0·0 | 0·0 | 20 | | 9·0 | Cirro-stratous scud; cirro-cumulo-strati. ☽ |
| 11 | 916 | 37·8 | 37·2 | 0·6 | 0·2 | 0·0 | 20 | | 4·0 | Id. ☽ |
| 12 | 917 | 34·4 | 34·2 | 0·2 | 0·0 | 0·0 | 20 | —:20:— | 3·0 | Id.; cirro-cumulo-strati. ☽ |
| 23 | 29·850 | 38·2 | 38·0 | 0·2 | 0·1 | 0·0 | | —:18:— | ..... | Sunday—Cloudy; A.M. Cirro-cumulo-strati; cirri; Evening clear; cirri. |
| 24 13 | 29·780 | 26·0 | 26·7 | ... | 0·3 | 0·0 | 18 | | 1·0 | Cirro-strati; cirri; Moon totally eclipsed. ☽ |
| 14 | 775 | 25·9 | 26·3 | ... | 0·0 | 0·0 | 20 | —:29:— | 0·8 | Cirro-cumulous scud; cirri; Moon partially eclipsed. ☽ |
| 15 | 774 | 25·1 | 25·7 | ... | 0·0 | 0·0 | 18 | | 1·5 | Id.; id. ☽ |
| 16 | 778 | 27·2 | 27·5 | ... | 0·0 | 0·0 | 18 | —:28:— | 9·2 | Cirro-cumulo-strati. ☽ |
| 17 | 786 | 29·7 | 29·5 | 0·2 | 0·0 | 0·0 | 20 | —:28:— | 9·9 | Id., much denser. |

Nov. 22d 11h. Increasing patches of scud; woolly, linear, and watery-looking cirri above; the watery-looking cirri appear to *move* but never to progress.

Nov. 22d 20h. Woolly cirri lying in bars from S. towards NNE.; piles of scud on Cheviot: the wind commenced to blow hard about 19h 37m.

* See additional meteorological notes after the *Hourly Meteorological Observations*.

| Gött. Mean Time. | | Barometer at 32°. | Thermometers. Dry. | Wet. | Diff. | Wind. Maximum force in 1h. | 10m. | From | Clouds, Sc. : C.-s. : Ci., moving from | Sky clouded. | Species of Clouds and Meteorological Remarks. |
|---|---|---|---|---|---|---|---|---|---|---|---|
| d. | h. | in. | ° | ° | ° | lbs. | lbs. | pt. | pt. pt. pt. | 0—10. | |
| 24 | 18 | 29·785 | 29·7 | 29·5 | 0·2 | 0·0 | 0·1 | 24 | — : 28 : — | 8·8 | Cirro-cumulo-strati. ☄ |
| | 19 | 797 | 30·4 | 30·2 | 0·2 | 0·1 | 0·1 | 18 | | 9·8 | Id.; cirro-strati. |
| | 20 | 807 | 30·2 | 30·0 | 0·2 | 0·1 | 0·0 | 24 | — : 26 : — | 6·0 | Cirro-cumulous scud; dense cirro-strati to E. ☽ |
| | 21 | 818 | 29·1 | 28·9 | 0·2 | 0·1 | 0·0 | | | 1·0 | Cirro-strati on horizon; patches of scud to SW. ⊙ |
| | 22 | 821 | 29·2 | 29·0 | 0·2 | 0·1 | 0·1 | 20 | | 1·0 | Cirri; haze on horizon. ⊙ |
| | 23 | 832 | 31·7 | 31·4 | 0·3 | 0·2 | 0·1 | 20 | — : 26 : — | 2·5 | Cirro-cumuli; cirro-strati; haze. ⊙ |
| 25 | 0 | 831 | 32·7 | 32·3 | 0·4 | 0·1 | 0·1 | 18 | | 2·5 | Cirri; haze; patches of scud to N. ⊙ |
| | 1 | 830 | 36·0 | 35·0 | 1·0 | 0·1 | 0·0 | 20 | — : — : 17 | 3·0 | Id.; id. ◐ |
| | 2 | 826 | 36·9 | 35·9 | 1·0 | 0·2 | 0·1 | | | 8·0 | Woolly and linear cirri; cir.-str.; haze; solar halo. ◐ |
| | 3 | 838 | 36·2 | 35·4 | 0·8 | 0·0 | 0·1 | 18 | | 9·0 | As before; solar halo. ◐ |
| | 4 | 840 | 35·2 | 34·4 | 0·8 | 0·1 | 0·1 | 20 | — : 29 : — | 8·5 | Cirro-cumuli; cirri; cirro-strati. |
| | 5 | 844 | 34·0 | 33·4 | 0·6 | 0·1 | 0·0 | 20 | | 8·5 | Id.; cirro-strati. ☽ |
| | 6 | 859 | 33·9 | 33·4 | 0·5 | 0·1 | 0·0 | 20 | | 6·5 | Id.; cirri. ☽ |
| | 7 | 868 | 31·9 | 32·5 | ... | 0·0 | 0·0 | 22 | | 6·0 | Id.; milky band of cirri; lunar corona. ☽ |
| | 8 | 874 | 33·6 | 33·2 | 0·4 | 0·0 | 0·0 | 18 | | 10·0 | Cirro-cumulo-strati. |
| | 9 | 888 | 34·0 | 33·5 | 0·5 | 0·1 | 0·0 | 22 | | 10·0 | Id. |
| | 10 | 890 | 33·0 | 32·6 | 0·4 | 0·1 | 0·0 | 19 | | 1·0 | Id.; patches of auroral cirri. ☽ |
| | 11 | 896 | 30·6 | ... | ... | 0·0 | 0·0 | 17 | | 1·5 | Small cirro-cumuli; coloured lunar corona. ☄ |
| | 12 | 899 | 31·4 | ... | ... | 0·0 | 0·0 | 20 | | 4·0 | Large fleecy cirro-cumuli; lunar corona. ☄ |
| | 13 | 29·902 | 31·9 | ... | ... | 0·1 | 0·0 | 22 | | 5·0 | Cirro-cumulous scud. ☄ |
| | 14 | 904 | 31·6 | ... | ... | 0·1 | 0·0 | 24 | | 0·2 | Patches of cirro-cumulous scud. ☽ |
| | 15 | 913 | 33·8 | ... | ... | 0·2 | 0·1 | 22 | | 0·1 | The same. ☽ |
| | 16 | 918 | 30·2 | ... | ... | 0·1 | 0·0 | 18 | | 0·2 | Cirro-strati to E. ☽ |
| | 17 | 921 | 29·3 | ... | ... | 0·0 | 0·0 | | | 0·3 | Cirro-strati. ☽ |
| | 18 | 934 | 31·0 | ... | ... | 0·0 | 0·0 | 19 | — : 22 : — | 2·0 | Cirro-cumulous scud to W. ☄ |
| | 19 | 933 | 31·3 | 31·1 | 0·2 | 0·1 | 0·0 | 24 | — : 22 : — | 9·9 | Id. ☄ |
| | 20 | 928 | 30·8 | 30·9 | ... | 0·0 | 0·1 | 19 | | 1·8 | Cirro-stratous scud; cirri; lunar corona. ☄ |
| | 21 | 944 | 32·3 | 32·2 | 0·1 | 0·1 | 0·1 | 21 | — : 21 : — | 9·5 | Id.; cirro-cumuli; cir.-str.; haze. |
| | 22 | 956 | 35·5 | 34·2 | 1·3 | 0·1 | 0·1 | 16 | — : 21 : — | 10·0 | As before. |
| | 23 | 957 | 37·2 | 36·4 | 0·8 | 0·1 | 0·1 | 16 | | 10·0 | Misty scud; cirro-strati. ⊖ |
| 26 | 0 | 958 | 39·3 | 38·1 | 1·2 | 0·0 | 0·0 | 19 | | 10·0 | Id. |
| | 1 | 952 | 42·7 | 41·0 | 1·7 | 0·3 | 0·3 | 20 | — : 20 : — | 9·5 | Cirro-cumuli; cirro-strati. ● |
| | 2 | 948 | 42·2 | 40·5 | 1·7 | 0·3 | 0·1 | 21 | — : 20 : — | 9·5 | Cirro-stratous scud; cirro-strati; cirri. |
| | 3 | 930 | 42·8 | 41·2 | 1·6 | 0·3 | 0·3 | 17 | 20 : — : — | 9·0 | Scud; cirro-strati; cirri; cumulo-strati. ● |
| | 4 | 922 | 42·4 | 41·0 | 1·4 | 0·3 | 0·2 | 16 | 20 : — : — | 8·5 | Id.; id.; cumuli on S. horizon. |
| | 5 | 916 | 41·7 | 40·3 | 1·4 | 0·2 | 0·1 | 20 | | 9·8 | Id.; thin cirri. |
| | 6 | 906 | 41·1 | 40·0 | 1·1 | 0·2 | 0·1 | 17 | | 4·0 | Id.; thin cirri over the sky. ☄ |
| | 7 | 910 | 40·0 | 39·4 | 0·6 | 0·1 | 0·1 | 16 | | 8·5 | Id.; cirri. ☄ |
| | 8 | 907 | 42·6 | 41·6 | 1·0 | 0·2 | 0·2 | 17 | | 9·9 | Id. |
| | 9 | 910 | 45·3 | 43·2 | 2·1 | 0·9 | 0·7 | 17 | | 10·0 | Id.; cirro-strati. |
| | 10 | 916 | 46·0 | 43·8 | 2·2 | 1·3 | 0·7 | 19 | | 10·0 | Id.; id.; cirrous haze. ☄ |
| | 11 | 907 | 45·8 | 43·6 | 2·2 | 1·0 | 0·9 | 20 | | 9·8 | Id.; id.; id. |
| | 12 | 904 | 46·8 | 44·1 | 2·7 | 1·5 | 1·0 | 20 | | 10·0 | Id.; id.; id. |
| | 13 | 899 | 47·4 | 44·5 | 2·9 | 1·8 | 1·4 | 18 | | 10·0 | Scud; cirro-strati; cirrous haze. |
| | 14 | 892 | 47·2 | 44·8 | 2·4 | 1·6 | 0·5 | 18 | | 10·0 | Id.; id.; rain$^{0·2}$ |
| | 15 | 882 | 47·0 | 44·8 | 2·2 | 1·4 | 0·5 | 18 | | 10·0 | Id.; rain$^{0·2}$ |
| | 16 | 894 | 47·8 | 45·2 | 2·6 | 1·3 | 1·0 | 20 | | 10·0 | Id.; shower$^{1}$ since last hour. |
| | 17 | 874 | 48·0 | 45·2 | 2·8 | 2·2 | 1·3 | 20 | | 10·0 | Id. |
| | 18 | 861 | 48·0 | 45·4 | 2·6 | 1·8 | 0·7 | 18 | | 10·0 | Id. |
| | 19 | 857 | 48·3 | 45·6 | 2·7 | 1·0 | 1·0 | 19 | | 10·0 | Thick scud. |
| | 20 | 869 | 48·6 | 45·8 | 2·8 | 1·8 | 1·0 | 19 | 21 : — : — | 10·0 | Id. |
| | 21 | 860 | 48·6 | 45·8 | 2·8 | 1·5 | 1·1 | 20 | 20 : — : — | 10·0 | Id. |
| | 22 | 849 | 48·8 | 45·9 | 2·9 | 2·4 | 1·7 | 18 | 20 : — : — | 10·0 | Id. |
| | 23 | 845 | 49·1 | 46·3 | 2·8 | 3·0 | 1·7 | 18 | 20 : — : — | 10·0 | Scud; cirro-strati. |
| 27 | 0 | 847 | 49·2 | 46·5 | 2·7 | 2·9 | 1·1 | 20 | 20 : — : — | 10·0 | Id.; id. |
| | 1 | 831 | 49·4 | 46·7 | 2·7 | 1·9 | 1·5 | 18 | 20 : — : — | 10·0 | The same. |

The direction of the wind is indicated by the number of the point of the compass, reckoning N. = 0, E. = 8, S. = 16, W. = 24. The motions of the three strata of clouds, Sc. (scud), C.-s. (cirro-stratus), and Cir. (cirrus), are indicated in a similar manner.

| Gött. Mean Time. | Barometer at 32°. | Thermometers. Dry. | Wet. | Diff. | Wind. Maximum force in 1h. | 10m. | From | Clouds, Sc. : C.-s. : Ci., moving from | Sky clouded. | Species of Clouds and Meteorological Remarks. |
|---|---|---|---|---|---|---|---|---|---|---|
| d. h. | in. | ° | ° | ° | lbs. | lbs. | pt. | pt. pt. pt. | 0—10. | |
| 27 2 | 29·821 | 49·2 | 46·6 | 2·6 | 2·1 | 0·9 | 19 | 20 : — : — | 10·0 | Scud; cirro-strati. |
| 3 | 801 | 49·9 | 47·1 | 2·8 | 2·5 | 2·4 | 20 | 20 : — : — | 10·0 | The same. |
| 4 | 809 | 49·7 | 47·0 | 2·7 | 2·4 | 1·2 | 18 | 20 : — : — | 10·0 | Id. |
| 5 | 811 | 49·8 | 47·0 | 2·8 | 3·4 | 0·9 | 20 | 20 : — : — | 10·0 | Id. |
| 6 | 798 | 49·8 | 47·0 | 2·8 | 2·4 | 2·4 | 18 | | 10·0 | Id.; dark. |
| 7 | 795 | 49·9 | 47·0 | 2·9 | 2·9 | 2·2 | 20 | | 10·0 | Id.; id. |
| 8 | 805 | 49·5 | 46·9 | 2·6 | 1·7 | 1·5 | 18 | | 10·0 | Id.; id. |
| 9 | 789 | 49·3 | 46·7 | 2·6 | 1·6 | 1·4 | 18 | | 10·0 | Id. |
| 10 | 774 | 48·7 | 46·0 | 2·7 | 2·8 | 2·0 | 18 | | 10·0 | Id. |
| 11 | 798 | 48·6 | 45·8 | 2·8 | 2·3 | 0·8 | 17 | | 10·0 | Id. |
| 12 | 783 | 48·0 | 45·5 | 2·5 | 1·0 | 0·8 | 18 | | 10·0 | Id. |
| 13 | 29·751 | 47·5 | 44·8 | 2·7 | 2·0 | 1·2 | 18 | | 10·0 | The same. |
| 14 | 734 | 47·4 | 44·8 | 2·6 | 1·2 | 0·7 | 18 | | 10·0 | Id. |
| 15 | 728 | 46·5 | 43·6 | 2·9 | 1·4 | 0·7 | 17 | | 10·0 | Id. |
| 16 | 719 | 46·0 | 43·6 | 2·4 | 1·8 | 1·4 | 17 | | 10·0 | Id. |
| 17 | 701 | 47·5 | 44·6 | 2·9 | 1·6 | 1·7 | 18 | | 10·0 | Id. |
| 18 | 681 | 46·5 | 43·3 | 3·2 | 1·8 | 2·0 | 21 | | 10·0 | Id. |
| 19 | 684 | 45·2 | 42·5 | 2·7 | 1·6 | 1·4 | 18 | | 10·0 | Id.; cirro-strati. |
| 20 | 676 | 45·2 | 42·7 | 2·5 | 1·7 | 0·8 | 18 | 19 : — : — | 9·9 | Scud; id. |
| 21 | 650 | 45·0 | 42·4 | 2·6 | 1·3 | 1·0 | 19 | 20 : — : — | 9·9 | Id.; id. |
| 22 | 630 | 45·4 | 43·0 | 2·4 | 1·7 | 1·8 | 18 | 19 : 19 : — | 9·5 | Id.; cirro-cumuli; cirri; cirro-strati. ⊖ |
| 23 | 652 | 46·3 | 43·7 | 2·6 | 1·9 | 1·3 | 18 | 20 : 20 : — | 10·0 | As before. |
| 28 0 | 647 | 47·3 | 44·3 | 3·0 | 2·0 | 1·0 | 21 | 21 : — : — | 9·9 | Scud; cirri; cirro-strati; haze. |
| 1 | 653 | 47·7 | 44·7 | 3·0 | 1·1 | 0·7 | 19 | 20 : — : — | 9·9 | As before. |
| 2 | 651 | 48·2 | 45·8 | 2·4 | 0·9 | 0·7 | 18 | 20 : — : — | 9·9 | Scud. |
| 3 | 651 | 48·0 | 45·4 | 2·6 | 0·9 | 0·6 | 17 | 20 : — : — | 10·0 | Id. |
| 4 | 647 | 47·2 | 45·3 | 1·9 | 1·1 | 0·8 | 17 | 20 : — : — | 10·0 | Id.; rain0·2 |
| 5 | 645 | 47·6 | 45·9 | 1·7 | 0·9 | 0·5 | 16 | | 10·0 | Id. |
| 6 | 675 | 47·9 | 46·0 | 1·9 | 0·7 | 0·5 | 17 | | 10·0 | Dense homogeneous mass; drops of rain. |
| 7 | 688 | 47·5 | 46·0 | 1·5 | 1·0 | 0·6 | 16 | | 10·0 | Id.; id. |
| 8 | 706 | 47·0 | 45·9 | 1·1 | 0·5 | 0·3 | 17 | | 10·0 | Id.; id. |
| 9 | 711 | 46·6 | 45·5 | 1·1 | 0·5 | 0·0 | 24 | | 10·0 | Clouds not so dense. |
| 10 | 714 | 46·0 | 45·0 | 1·0 | 0·0 | 0·0 | 22 | | 10·0 | Scud; cirro-strati. |
| 11 | 720 | 45·7 | 44·8 | 0·9 | 0·1 | 0·0 | 19 | | 10·0 | Id.; id. |
| 12 | 728 | 45·4 | 44·8 | 0·6 | 0·1 | 0·0 | 17 | | 10·0 | Id.; id. |
| 13 | 29·740 | 45·0 | 44·7 | 0·3 | 0·0 | 0·0 | 8 | | 10·0 | Cirrous mass; rain0·2 |
| 14 | 740 | 44·8 | 44·5 | 0·3 | 0·1 | 0·0 | 8 | | 10·0 | Scotch mist. |
| 15 | 745 | 44·8 | 44·6 | 0·2 | 0·1 | 0·0 | 8 | | 10·0 | Id. |
| 16 | 747 | 44·8 | 44·5 | 0·3 | 0·0 | 0·0 | | | 10·0 | Id. |
| 17 | 755 | 44·8 | 44·5 | 0·3 | 0·0 | 0·0 | 11 | | 10·0 | Id. |
| 18 | 764 | 44·9 | 43·8 | 1·1 | 0·3 | 0·3 | 15 | | 10·0 | Scud; mist clearing away. |
| 19 | 786 | 44·0 | 42.7 | 1·3 | 0·2 | 0·5 | 16 | | 10·0 | Scud and cirro-strati. |
| 20 | 799 | 43·3 | 41·9 | 1·4 | 0·7 | 0·4 | 14 | 14 : — : — | 10·0 | Scud; cirro-strati and haze. |
| 21 | 827 | 42·7 | 41·4 | 1·3 | 0·6 | 0·5 | 14 | 14 : 20 : — | 9·5 | Loose scud; cirro-cumuli; woolly cirri. |
| 22 | 856 | 43·9 | 42·2 | 1·7 | 0·8 | 0·2 | 16 | 14 : — : — | 9·9 | Scud; cirro-strati; cirri. |
| 23 | 853 | 44·3 | 42·2 | 2·1 | 1·2 | 0·4 | 16 | | 10·0 | Id.; id. |
| 29 0 | 858 | 44·7 | 42·0 | 2·7 | 1·1 | 0·6 | 14 | — : 26 : — | 9·7 | Cirro-strati; cirro-cumulo-strati. ⊖ |
| 1 | 869 | 43·9 | 41·3 | 2·6 | 1·0 | 1·2 | 14 | 14 : 26 : — | 9·0 | Scud; cirro-strati; cirro-cumulo-strati. |
| 2 | 874 | 44·3 | 42·1 | 2·2 | 1·7 | 0·5 | 15 | 14 : 24 : 24 | 9·5 | Id.; id.; cirri. ⊖ |
| 3 | 893 | 44·9 | 42·1 | 2·8 | 0·6 | 0·4 | 16 | 14 : 24 : 24 | 9·0 | Id.; id.; id. ⊙ |
| 4 | 915 | 43·6 | 41·2 | 2·4 | 0·6 | 0·3 | 16 | 14 : — : — | 9·7 | Id.; id.; id. |
| 5 | 926 | 43·0 | 40·9 | 2·1 | 0·2 | 0·1 | 15 | | 10·0 | Scud. |
| 6 | 926 | 42·5 | 40·7 | 1·8 | 0·3 | 0·5 | 15 | | 10·0 | Id. |
| 7 | 943 | 42·0 | 40·4 | 1·6 | 0·3 | 0·2 | 14 | | 10·0 | Id.; dark. |
| 8 | 964 | 40·6 | 38·9 | 1·7 | 0·4 | 0·3 | 12 | | 8·5 | Id. |
| 9 | 967 | 39·0 | 37·4 | 1·6 | 0·4 | 0·3 | 16 | | 6·0 | Id.; cirro-strati. |

The direction of the wind is indicated by the number of the point of the compass, reckoning N. = 0, E. = 8, S. = 16, W. = 24. The motions of the three strata of clouds, Sc. (scud), C.-s. (cirro-stratus), and Cir. (cirrus), are indicated in a similar manner.

| Gött. Mean Time. | Barometer at 32°. | Thermometers. Dry. | Wet. | Diff. | Wind. Maximum force in 1h. | 10m. | From | Clouds, Sc. : C.-s. : Ci., moving from | Sky clouded. | Species of Clouds and Meteorological Remarks. |
|---|---|---|---|---|---|---|---|---|---|---|
| d. h. | in. | | ° | ° | lbs. | lbs. | pt. | pt. pt. pt. | 0—10. | |
| 29 10 | 29·971 | 36·9 | 35·7 | 1·2 | 0·2 | 0·0 | | | 3·0 | Scud; cirro-strati. ☽ |
| 11 | 972 | 37·8 | 35·8 | 2·0 | 0·0 | 0·0 | | | 9·0 | Cirro-cumulous scud. ☽ |
| 12 | 982 | 34·9 | 33·6 | 1·3 | 0·0 | 0·0 | 15 | — : 14 : — | 3·0 | Id. ☽ |
| 13 | 29·984 | 33·6 | 32·4 | 1·2 | 0·0 | 0·0 | 14 | | 7·0 | Cirro-cumulous scud. ☽ |
| 14 | 983 | 33·0 | 32·2 | 0·8 | 0·0 | 0·0 | | | 7·0 | Id. |
| 15 | 983 | 33·0 | 32·0 | 1·0 | 0·0 | 0·0 | | | 9·7 | Id. |
| 16 | 989 | 35·3 | 34·3 | 1·0 | 0·0 | 0·0 | | | 10·0 | Id. |
| 17 | 29·998 | 36·4 | 35·1 | 1·3 | 0·0 | 0·0 | | | 10·0 | Id. |
| 18 | 30·001 | 36·2 | 35·2 | 1·0 | 0·0 | 0·0 | | | 10·0 | Id. |
| 19 | 003 | 37·7 | 36·7 | 1·0 | 0·0 | 0·0 | | | 10·0 | Id. |
| 20 | 011 | 37·7 | 36·4 | 1·3 | 0·1 | 0·1 | 22 | | 10·0 | Id. |
| 21 | 017 | 36·9 | 35·9 | 1·0 | 0·1 | 0·0 | 0 | | 10·0 | Id. |
| 22 | 027 | 37·6 | 36·6 | 1·0 | 0·0 | 0·0 | 25 | — : 14 : — | 9·8 | Id. |
| 23 | 028 | 39·4 | 38·1 | 1·3 | 0·0 | 0·0 | | | 9·9 | Id. |
| 30 0 | 018 | 42·0 | 40·0 | 2·0 | 0·0 | 0·0 | 12 | 14 : — : — | 10·0 | Scud; cirro-strati. |
| 1 | 016 | 42·8 | 40·6 | 2·2 | 0·0 | 0·0 | 6 | 14 : — : — | 9·7 | Id.; id. |
| 2 | 015 | 42·6 | 40·3 | 2·3 | 0·1 | 0·1 | 16 | 14 : — : — | 8·5 | Id.; id.; cirri. |
| 3 | 016 | 42·6 | 40·2 | 2·4 | 0·2 | 0·1 | 12 | — : 14 : — | 9·8 | Cirro-cumulous scud; cirro-strati. |
| 4 | 018 | 41·6 | 39·3 | 2·3 | 0·1 | 0·0 | | | 9·9 | Cirro-strati becoming dense scud. |
| 5 | 032 | 40·4 | 38·9 | 1·5 | 0·0 | 0·0 | 4 | 12 : — : — | 10·0 | Dense scud; drops of rain. |
| 6 | 044 | 39·9 | 38·4 | 1·5 | 0·2 | 0·1 | 12 | | 10·0 | Scud. |
| 7 | 049 | 39·9 | 38·3 | 1·6 | 0·1 | 0·0 | 12 | | 10·0 | Id. |
| 8 | 054 | 39·8 | 38·4 | 1·4 | 0·1 | 0·0 | 12 | | 9·9 | Id. |
| 9 | 052 | 39·0 | 38·0 | 1·0 | 0·1 | 0·0 | 16 | | 10·0 | Id. |
| 10 | 050 | 38·9 | 37·7 | 1·2 | 0·0 | 0·0 | 14 | | 10·0 | Id. |
| 11 | 055 | 38·6 | 37·8 | 0·8 | 0·0 | 0·0 | | | 8·0 | Cirro-cumulous scud. ☽ |
| 12 | 058 | 37·0 | 36·4 | 0·6 | 0·0 | 0·0 | 4 | | 9·8 | Id. |
| 23 | 30·071 | 40·2 | 39·0 | 1·2 | 0·2 | 0·0 | | | ..... | Sunday—Dense cirro-stratous scud. |
| 1 13 | 29·983 | 38·2 | 37·3 | 0·9 | 0·2 | 0·1 | 4 | | 10·0 | Scud. |
| 14 | 975 | 37·9 | 37·2 | 0·7 | 0·0 | 0·0 | 2 | | 10·0 | Id. |
| 15 | 970 | 37·8 | 37·2 | 0·6 | 0·0 | 0·0 | 7 | | 10·0 | Id.; rain$^{0·2}$ |
| 16 | 958 | 37·8 | 37·3 | 0·5 | 0·0 | 0·0 | 8 | | 10·0 | Id.; rain$^{0·5}$ |
| 17 | 932 | 37·4 | 37·0 | 0·4 | 0·0 | 0·0 | 9 | | 9·9 | Cirro-cumulo-strati; mist on the ground. ☽ |
| 18 | 924 | 36·5 | 36·1 | 0·4 | 0·0 | 0·0 | 6 | | 8·0 | Id. |
| 19 | 924 | 36·1 | 35·8 | 0·3 | 0·1 | 0·0 | 22 | | 10·0 | Thick scud. |
| 20 | 908 | 36·9 | 36·4 | 0·5 | 0·0 | 0·0 | 0 | | 10·0 | Id. |
| 21 | 907 | 37·5 | 37·0 | 0·5 | 0·0 | 0·0 | 4 | 12 : — : — | 10·0 | Id.; rain$^{0·2}$ |
| 22 | 899 | 38·0 | 37·3 | 0·7 | 0·0 | 0·0 | 12 | 11 : — : — | 10·0 | Id.; id. |
| 23 | 896 | 38·0 | 37·6 | 0·4 | 0·0 | 0·0 | 14 | 11 : — : — | 10·0 | Id.; id. |
| 2 0 | 884 | 38·3 | 37·8 | 0·5 | 0·0 | 0·0 | 18 | | 10·0 | Id.; id. |
| 1 | 868 | 39·1 | 38·6 | 0·5 | 0·0 | 0·0 | 18 | | 10·0 | Scud; cirro-stratous scud; rain$^{0·2}$ |
| 2 | 854 | 39·4 | 38·6 | 0·8 | 0·1 | 0·0 | 14 | — : 12 : — | 9·9 | Cirro-stratous scud. |
| 3 | 834 | 39·1 | 38·4 | 0·7 | 0·0 | 0·0 | 8 | | 9·8 | Id. |
| 4 | 838 | 38·8 | 37·7 | 1·1 | 0·0 | 0·0 | 12 | — : 11 : — | 10·0 | Id. |
| 5 | 825 | 37·8 | 36·7 | 1·1 | 0·0 | 0·1 | 12 | — : 11 : — | 9·0 | Id. |
| 6 | 826 | 37·0 | 36·2 | 0·8 | 0·0 | 0·0 | 15 | | 10·0 | Id. |
| 7 | 834 | 37·2 | 36·2 | 1·0 | 0·1 | 0·1 | | | 10·0 | Id.; dark. |
| 8 | 846 | 37·3 | 36·5 | 0·8 | 0·1 | 0·0 | | | 10·0 | Id.; id. |
| 9 | 851 | 37·0 | 36·4 | 0·6 | 0·0 | 0·0 | | | 10·0 | Id.; id. |
| 10 | 859 | 37·2 | 36·6 | 0·6 | 0·0 | 0·0 | | | 10·0 | Id.; id. |
| 11 | 877 | 37·2 | 36·6 | 0·6 | 0·0 | 0·0 | 12 | | 10·0 | Scud; dark. |
| 12 | 890 | 37·1 | 36·5 | 0·6 | 0·0 | 0·0 | 4 | | 10·0 | Id.; id. |
| 13 | 29·905 | 37·9 | 37·0 | 0·9 | 0·0 | 0·0 | 0 | | 10·0 | Scud; dark. |
| 14 | 916 | 37·6 | 36·8 | 0·8 | 0·0 | 0·0 | 0 | | 10·0 | Id.; id. |
| 15 | 932 | 38·0 | 36·9 | 1·1 | 0·0 | 0·0 | 6 | | 10·0 | Id.; id.; rain$^{0·2}$ |

The direction of the wind is indicated by the number of the point of the compass, reckoning N. = 0, E. = 8, S. = 16, W. = 24. The motions of the three strata of clouds, Sc. (scud), C.-s. (cirro-stratus), and Cir. (cirrus), are indicated in a similar manner.

| Gött. Mean Time. | Barometer at 32°. | Thermometers. Dry. | Wet. | Diff. | Wind. Maximum force in 1h. | 10m. | From | Clouds, Sc. : C.-s. : Ci., moving from | Sky clouded. | Species of Clouds and Meteorological Remarks. |
|---|---|---|---|---|---|---|---|---|---|---|
| d. h. | in. | ° | ° | ° | lbs. | lbs. | pt. | pt. pt. pt. | 0—10. | |
| 2 16 | 29·944 | 37·0 | 36·5 | 0·5 | 0·0 | 0·0 | 6 | | 10·0 | Scud; dark. |
| 17 | 950 | 37·2 | 36·7 | 0·5 | 0·0 | 0·0 | 4 | | 10·0 | Id. |
| 18 | 961 | 36·8 | 36·4 | 0·4 | 0·0 | 0·0 | 4 | | 10·0 | Id.; rain0·2 |
| 19 | 29·970 | 36·8 | 36·4 | 0·4 | 0·0 | 0·0 | 6 | | 10·0 | Id. |
| 20 | 30·001 | 36·8 | 36·3 | 0·5 | 0·1 | 0·0 | 1 | | 10·0 | Id. |
| 21 | 025 | 36·6 | 36·0 | 0·6 | 0·0 | 0·0 | 0 | — : 12 : — | 10·0 | Cirro-stratous scud; drops of rain. |
| 22 | 045 | 36·7 | 36·3 | 0·4 | 0·2 | 0·0 | 2 | — : 12 : — | 10·0 | Id. |
| 23 | 055 | 37·7 | 37·1 | 0·6 | 0·0 | 0·0 | 4 | — : 13 : — | 10·0 | Id. |
| 3 0 | 057 | 38·3 | 37·6 | 0·7 | 0·0 | 0·0 | 6 | — : 12 : — | 10·0 | Id.; drops of rain. |
| 1 | 052 | 38·9 | 37·9 | 1·0 | 0·1 | 0·1 | 4 | — : 12 : — | 9·9 | Id.; haze on horizon. |
| 2 | 054 | 39·1 | 38·1 | 1·0 | 0·0 | 0·0 | 4 | — : 12 : — | 10·0 | Id.; id. |
| 3 | 062 | 39·0 | 38·2 | 0·8 | 0·0 | 0·0 | 1 | — : 12 : — | 9·9 | Cirro-cumulous scud; cirro-strati. |
| 4 | 092 | 38·7 | 38·0 | 0·7 | 0·1 | 0·0 | 20 | — : 12 : — | 10·0 | Id. |
| 5 | 113 | 38·5 | 37·7 | 0·8 | 0·0 | 0·0 | 24 | | 10·0 | Scud; cirro-strati. |
| 6 | 104 | 38·2 | 37·1 | 1·1 | 0·2 | 0·0 | 15 | | 9·5 | Id.; id.; stars dim. |
| 7 | 123 | 36·0 | 35·6 | 0·4 | 0·1 | 0·0 | 23 | | 10·0 | Id.; id. |
| 8 | 139 | 34·7 | 34·3 | 0·4 | 0·0 | 0·0 | 22 | | 9·8 | Id.; id.; stars dim. |
| 9 | 143 | 34·3 | 33·9 | 0·4 | 0·0 | 0·0 | 24 | | 4·0 | Thin clouds; id. |
| 10 | 161 | 34·5 | 34·2 | 0·3 | 0·0 | 0·1 | 16 | | 9·8 | Scud and cirrous clouds? |
| 11 | 159 | 33·6 | 33·1 | 0·5 | 0·0 | 0·0 | 26 | | 3·0 | Id. |
| 12 | 167 | 33·7 | 33·3 | 0·4 | 0·0 | 0·0 | 18 | | 9·9 | Thin clouds. |
| 13 | 30·164 | 32·2 | 31·9 | 0·3 | 0·0 | 0·0 | 30 | | 7·0 | Thin clouds. |
| 14 | 170 | 33·2 | 33·0 | 0·2 | 0·0 | 0·0 | 18 | | 2·5 | Scud; cirro-strati. ☽ |
| 15 | 182 | 30·1 | 30·0 | 0·1 | 0·0 | 0·0 | 18 | | 2·5 | Id.; id. |
| 16 | 177 | 29·2 | 29·0 | 0·2 | 0·0 | 0·0 | 6 | | 0·5 | Id.; id. ☽ |
| 17 | 175 | 29·3 | 29·5 | ... | 0·0 | 0·0 | 14 | | 8·0 | Id.; id. |
| 18 | 171 | 31·2 | 31·0 | 0·2 | 0·0 | 0·0 | 18 | | 10·0 | Id.; id. |
| 19 | 187 | 31·9 | 31·9 | 0·0 | 0·0 | 0·0 | 16 | 14 : — : — | 9·9 | Id.; id. |
| 20 | 184 | 31·9 | 31·7 | 0·2 | 0·0 | 0·1 | 30 | 14 : — : — | 10·0 | Id.; id. |
| 21 | 184 | 32·7 | 32·0 | 0·7 | 0·0 | 0·0 | 10 | 14 : — : — | 10·0 | Id.; id. |
| 22 | 184 | 34·0 | 32·4 | 1·6 | 0·0 | 0·0 | 14 | — : 12 : — | 9·9 | Cirro-stratous scud; cirro-strati. |
| 23 | 172 | 37·5 | 34·8 | 2·7 | 0·1 | 0·0 | 10 | — : 12 : — | 9·0 | Id. |
| 4 0 | 168 | 38·3 | 36·3 | 2·0 | 0·1 | 0·1 | 15 | — : 12 : — | 3·0 | Id.; cirro-strati on horizon. ⊙ |
| 1 | 147 | 38·2 | 35·8 | 2·4 | 0·7 | 0·8 | 14 | — : 14 : — | 2·0 | Id.; id. ⊖ |
| 2 | 137 | 38·2 | 35·6 | 2·6 | 0·6 | 0·6 | 14 | | 0·8 | Patches of scud; cirro-strati; cirrous haze. ⊙ |
| 3 | 132 | 37·2 | 34·7 | 2·5 | 0·6 | 0·4 | 14 | | 0·2 | Cirro-strati and haze on horizon. ⊙ |
| 4 | 122 | 35·0 | 33·2 | 1·8 | 0·3 | 0·4 | 14 | | 0·2 | Id. |
| 5 | 112 | 33·5 | 32·0 | 1·5 | 0·5 | 0·3 | 15 | | 0·2 | Id. |
| 6 | 100 | 33·9 | 32·1 | 1·8 | 0·4 | 0·3 | 15 | | 0·2 | Clouds near horizon. |
| 7 | 107 | 32·5 | 31·0 | 1·5 | 0·4 | 0·0 | 20 | | 0·2 | Id.; stars dimmer. |
| 8 | 103 | 31·1 | 30·0 | 1·1 | 0·0 | 0·0 | 24 | | 0·3 | Id.; faint aurora. |
| 9 | 096 | 30·8 | 29·6 | 1·2 | 0·2 | 0·3 | 16 | | 0·2 | Id. |
| 10 | 083 | 30·2 | 30·0 | 0·2 | 0·3 | 0·3 | 15 | | 0·1 | Id. |
| 11 | 072 | 28·4 | 28·5 | ... | 0·3 | 0·1 | | | 0·5 | Id.; auroral light. |
| 12 | 069 | 28·4 | 28·4 | ... | 0·2 | 0·1 | 30 | | 0·2 | Id. |
| 13 | 30·052 | 33·1 | 31·7 | 1·4 | 0·4 | 0·3 | 18 | | 0·5 | Clouds near horizon. |
| 14 | 040 | 31·2 | 30·3 | 0·9 | 0·3 | 0·1 | 16 | | 0·5 | Id. |
| 15 | 031 | 33·0 | 32·0 | 1·0 | 0·7 | 0·5 | 14 | | 0·5 | Id. |
| 16 | 016 | 29·0 | 28·9 | 0·1 | 0·2 | 0·1 | 18 | | 0·2 | Id. ☽ |
| 17 | 008 | 29·0 | 28·6 | 0·4 | 0·2 | 0·1 | 16 | | 0·0 | ☽ |
| 18 | 015 | 26·7 | 26·7 | ... | 0·1 | 0·0 | | | 0·0 | Clear. |
| 19 | 013 | 35·3 | 25·0 | 0·3 | 0·0 | 0·0 | 22 | | 0·1 | Cirro-strati to SE. |
| 20 | 009 | 24·1 | 24·1 | ... | 0·2 | 0·0 | 25 | | 0·3 | Scud; loose cumuli to SE.; cirri to W. |
| 21 | 018 | 24·9 | 25·3 | ... | 0·2 | 0·2 | 18 | 20 : — : 28 | 5·0 | Scud on SE. hor.; woolly cirri radiating from SSW. |
| 22 | 025 | 24·4 | 24·1 | 0·3 | 0·1 | 0·0 | 20 | | 7·0 | As before. ⊙ |
| 23 | 024 | 26·7 | 26·1 | 0·6 | 0·0 | 0·0 | 16 | | 5·0 | Id. ⊙ |

The direction of the wind is indicated by the number of the point of the compass, reckoning N. = 0, E. = 8, S. = 16, W. = 24. The motions of the three strata of clouds, Sc. (scud), C.-s. (cirro-stratus), and Cir. (cirrus), are indicated in a similar manner.

| Gött. Mean Time. | | Barometer at 32°. | Thermometers. Dry. | Wet. | Diff. | Wind. Maximum force in 1h. | 10m. | From | Clouds, Sc. : C.-s. : Ci., moving from | Sky clouded. | Species of Clouds and Meteorological Remarks. |
|---|---|---|---|---|---|---|---|---|---|---|---|
| d. | h. | in. | ° | ° | ° | lbs. | lbs. | pt. | pt. pt. pt. | 0—10. | |
| 5 | 0 | 30·024 | 28·2 | 27·6 | 0·6 | 0·1 | 0·0 | 26 | — : 28 : 28 | 7·0 | Cirri; cirro-strati; cirrous haze. ⊙ |
| | 1 | 017 | 30·3 | 29·4 | 0·9 | 0·2 | 0·0 | 22 | | 8·0 | Woolly cirri; id. ⊖ |
| | 2 | 015 | 31·1 | 30·0 | 1·1 | 0·0 | 0·0 | 22 | | 6·0 | Id.; id. ⊖ |
| | 3 | 001 | 29·7 | 29·0 | 0·7 | 0·0 | 0·0 | 21 | | 8·0 | The same; traces of a halo. |
| | 4 | 30·010 | 28·6 | 28·0 | 0·6 | 0·0 | 0·0 | 24 | — : — : 28 | 6·0 | Id.; cirri scarcely moving. |
| | 5 | 29·998 | 24·9 | 25·1 | ... | 0·0 | 0·0 | 26 | | 4·0 | Id. |
| | 6 | 29·997 | 24·9 | 24·9 | ... | 0·0 | 0·0 | | | 4·0 | Cirro-strati; cirrous haze. |
| | 7 | 29·993 | 23·6 | ... | ... | 0·0 | 0·0 | 23 | | 3·0 | Cirri; id. |
| | 8 | 30·006 | 24·2 | 24·0 | 0·2 | 0·0 | 0·0 | 24 | | 3·0 | Id.; id.; stars very dim. |
| | 9 | 012 | 23·5 | 23·6 | ... | 0·1 | 0·0 | 16 | | 4·0 | As before. ⊙ |
| | 10 | 017 | 23·5 | 23·5 | ... | 0·0 | 0·0 | 22 | | 4·0 | Id. |
| | 11 | 009 | 22·0 | 22·3 | ... | 0·1 | 0·0 | 24 | | 2·0 | Id.; stars rather dim. |
| | 12 | 011 | 22·4 | 22·2 | 0·2 | 0·2 | 0·1 | 20 | | 1·0 | Id. |
| | 13 | 30·002 | 22·0 | 21·5 | 0·5 | 0·1 | 0·0 | 19 | | 1·0 | As before. |
| | 14 | 29·999 | 19·6 | 19·8 | ... | 0·1 | 0·0 | 17 | | 1·0 | Id. |
| | 15 | 30·004 | 18·5 | 18·5 | ... | 0·0 | 0·0 | 18 | | 0·5 | Cir. and cir. haze. on NW. hor. throughout the night. |
| | 16 | 30·006 | 18·4 | 18·7 | ... | 0·0 | 0·0 | 20 | | 1·0 | Id. id. |
| | 17 | 29·998 | 20·2 | 19·9 | 0·3 | 0·0 | 0·0 | 22 | | 2·5 | Id. ⚹ |
| | 18 | 29·996 | 20·9 | 20·6 | 0·3 | 0·1 | 0·1 | 21 | | 1·5 | Id.; lunar corona and halo. ⚹ |
| | 19 | 29·994 | 20·6 | 20·5 | 0·1 | 0·1 | 0·0 | 17 | | 4·0 | Id.; id. ⚹ |
| | 20 | 30·009 | 22·0 | 21·9 | 0·1 | 0·1 | 0·1 | 19 | | 9·0 | Cirro-strati; cirrous haze, tinged red. |
| | 21 | 013 | 22·2 | 22·0 | 0·2 | 0·2 | 0·0 | 18 | | 8·0 | Woolly cirri, tinged yellow. |
| | 22 | 024 | 22·4 | 22·2 | 0·2 | 0·0 | 0·0 | 18 | | 6·0 | Id.; cirro-strati; scud. ⊖ |
| | 23 | 031 | 23·5 | 23·2 | 0·3 | 0·0 | 0·0 | 21 | | 7·0 | Id.; id. |
| 6 | 0 | 011 | 24·7 | 24·2 | 0·5 | 0·1 | 0·1 | 21 | — : — : 24 | 3·5 | Id.; id.; cirrous haze. ⊙ |
| | 1 | 005 | 26·8 | 26·0 | 0·8 | 0·1 | 0·1 | 20 | | 2·0 | Id.; id.; id. ⊙ |
| | 2 | 000 | 28·2 | 27·3 | 0·9 | 0·1 | 0·1 | 22 | | 2·0 | Id.; id.; id. ⊙ |
| | 3 | 009 | 30·2 | 28·8 | 1·4 | 0·1 | 0·1 | 20 | | 1·0 | Id.; id.; id. ⊙ |
| | 4 | 011 | 29·0 | 27·8 | 1·2 | 0·1 | 0·1 | 18 | | 3·0 | Id.; id.; id. ⊙ |
| | 5 | 019 | 26·8 | 26·0 | 0·8 | ... | 0·0 | 20 | | 0·1 | Cirri; cirrous haze. |
| | 6 | 026 | 26·2 | 25·3 | 0·9 | ... | 0·0 | 22 | | 0·0 | Very clear. |
| | 7 | 042 | 22·7 | 22·8 | ... | ... | 0·0 | 21 | | 0·2 | Hazy on N. horizon. |
| | 8 | 052 | 23·2 | 22·9 | 0·3 | ... | 0·0 | 21 | | 0·0 | |
| | 9 | 050 | 19·8 | 20·1 | ... | ... | 0·0 | 18 | | 0·0 | |
| | 10 | 044 | 22·3 | 21·7 | 0·6 | ... | 0·0 | 20 | | 0·0 | |
| | 11 | 048 | 22·3 | 22·0 | 0·3 | ... | 0·0 | 22 | | 0·0 | Hazy on horizon. |
| | 12 | 062 | 22·3 | 22·0 | 0·3 | ... | 0·0 | 20 | | 5·0 | Cirri; cirrous haze. |
| | 13 | 30·072 | 23·7 | 23·3 | 0·4 | ... | 0·0 | 20 | | 9·9 | Cirrous clouds? |
| | 14 | 069 | 22·7 | 22·6 | 0·1 | ... | 0·0 | 28 | | 2·0 | Cirri and cirrous haze? |
| | 15 | 083 | 22·3 | 22·0 | 0·3 | ... | 0·0 | 24 | | 1·5 | Id. |
| | 16 | 085 | 19·8 | 19·8 | 0·0 | ... | 0·0 | 18 | | 1·0 | Id. |
| | 17 | 091 | 18·7 | 18·8 | ... | ... | 0·0 | 26 | | 0·0 | Hazy. |
| | 18 | 083 | 17·7 | 17·4 | 0·3 | ... | 0·0 | 20 | | 0·0 | Haze on horizon. |
| | 19 | 089 | 16·1 | 16·0 | ... | ... | 0·0 | 21 | | 0·0 | Id. ☽ |
| | 20 | 099 | 16·7 | 16·2 | 0·5 | ... | 0·1 | 20 | | 2·0 | Cirri; hazy on horizon; red to SE. ☽ |
| | 21 | 111 | 15·3 | 15·4 | ... | ... | ... | 18 | | 4·0 | Id.; id.; tinged red round horizon. |
| | 22 | 117 | 17·9 | 17·2 | 0·7 | ... | ... | | | 5·0 | Woolly cirri, radiating from NE by N. and SW by S. ◐ |
| | 23 | 133 | 19·7 | 19·0 | 0·7 | ... | 0·0 | | | 5·0 | Id.; hazy on horizon. ◐ |
| 7 | 0 | 120 | 22·7 | 21·8 | 0·9 | ... | 0·0 | 25 | | 3·0 | Cirri; very hazy on horizon. ◐ |
| | 1 | 114 | 25·0 | 24·3 | 0·7 | ... | 0·1 | 4 | | 6·5 | Linear cirri; id. ⊙ |
| | 2 | 101 | 31·4 | 30·2 | 1·2 | ... | 0·3 | 16 | — : — : 31 | 7·0 | Id.; id.; scud on Cheviot. ◐ |
| | 3 | 120 | 30·8 | 29·8 | 1·0 | ... | 0·2 | 16 | | 7·0 | Id.; id.; id. ◐ |
| | 4 | 124 | 27·7 | 27·1 | 0·6 | ... | 0·2 | 12 | | 7·0 | Id.; id.; id. |
| | 5 | 133 | 28·0 | 26·9 | 1·1 | ... | 0·1 | 12 | 8 : — : 31 | 1·0 | Patch of scud to S.; cirri; hazy on horizon. |
| | 6 | 121 | 29·9 | 28·2 | 1·7 | ... | 1·0 | 15 | | 0·5 | Patches of cir.-str. to S. and SW.; cir. haze on hor. |
| | 7 | 125 | 30·8 | 29·0 | 1·8 | ... | 0·8 | 14 | | 0·0 | Clear. |

The direction of the wind is indicated by the number of the point of the compass, reckoning N. = 0, E. = 8, S. = 16, W. = 24. The motions of the three strata of clouds, Sc. (scud), C.-s. (cirro-stratus), and Cir. (cirrus), are indicated in a similar manner.

Dec. 5d 18h. Observation made at 18h 13m.

Dec. 5d 18h 55m. Kelso bells heard very distinctly.

Dec. 6d 5h—10d 2h. The force of the wind has been estimated during this time, the water in the cistern of the anemometer having been [frozen.

| Gött. Mean Time. | | Barometer at 32°. | Thermometers. Dry. | Wet. | Diff. | Wind. Maximum force in 1h. | 10m. | From | Clouds, Sc. : C.-s. : Ci., moving from | Sky clouded. | Species of Clouds and Meteorological Remarks. |
|---|---|---|---|---|---|---|---|---|---|---|---|
| d. | h. | in. | ° | ° | ° | lbs. | lbs. | pt. | pt. pt. pt. | 0—10. | |
| 7 | 8 | 30·131 | 31·2 | 29·4 | 1·8 | ... | 1·5 | 16 | | 0·0 | Clear. |
| | 9 | 134 | 31·6 | 29·8 | 1·8 | ... | 2·5 | 16 | | 3·0 | Scud. |
| | 10 | 140 | 32·2 | 30·6 | 1·6 | ... | 1·0 | 15 | | 8·0 | Thin scud. |
| | 11 | 147 | 31·2 | 29·6 | 1·6 | ... | 2·0 | 14 | | 8·0 | Scud; clouds broken. |
| | 12 | 157 | 31·3 | 29·8 | 1·5 | ... | 2·5 | 14 | | 9·0 | Id.; id. |
| | 23 | 30·140 | 28·6 | ... | ... | ... | 0·0 | 6 | — : 11 : — | 10·0 | Sunday—Overcast; cir.-str. scud; flakes of snow, P.M. |
| 8 | 13 | 30·021 | 33·0 | 32·2 | 0·8 | ... | 0·1 | 7 | | 10·0 | Scud? snow$^{0\cdot5}$ lately. |
| | 14 | 016 | 33·4 | 32·7 | 0·7 | 0·7 | 0·1 | 4 | | 9·9 | Id. |
| | 15 | 013 | 33·0 | 32·6 | 0·4 | ... | 0·0 | 1 | | 9·8 | Cirro-stratous scud? flakes of snow occasionally. |
| | 16 | 006 | 33·1 | 32·5 | 0·6 | ... | 0·0 | 3 | | 10·0 | Id.; id. |
| | 17 | 30·002 | 32·2 | 32·0 | 0·2 | ... | 0·0 | 2 | | 4·0 | Id.; clouds round horizon. |
| | 18 | 29·996 | 32·0 | 31·7 | 0·3 | ... | 0·1 | 2 | | 10·0 | Id.; snow$^{0\cdot5}$ |
| | 19 | 29·993 | 32·3 | 32·0 | 0·3 | ... | 0·0 | 3 | | 7·5 | Id.; sky to S. |
| | 20 | 30·010 | 31·8 | 31·5 | 0·3 | ... | 0·0 | 6 | | 9·8 | Smoky scud; cirro-cumuli; cirro-strati. |
| | 21 | 017 | 28·6 | ... | ... | ... | 0·0 | 16 | — : 8 : — | 8·0 | Cirro-cumulous scud; smoky fog to S. |
| | 22 | 036 | 28·2 | 28·1 | 0·1 | ... | 0·0 | 17 | — : 8 : — | 8·5 | Id.; dense fog. |
| | 23 | 050 | 29·6 | 29·4 | 0·2 | ... | 0·1 | 18 | — : 10 : — | 9·9 | Id.; cirro-strati. |
| 9 | 0 | 059 | 30·9 | 30·7 | 0·2 | ... | 0·1 | 21 | — : 11 : — | 10·0 | Cirro-stratous scud. |
| | 1 | 064 | 31·9 | 31·5 | 0·4 | ... | 0·1 | 18 | — : 10 : — | 10·0 | Scud; cirro-stratous scud. |
| | 2 | 063 | 32·9 | 32·0 | 0·9 | ... | 0·1 | 16 | — : 10 : — | 9·8 | Cirro-cumulous scud. |
| | 3 | 071 | 32·1 | 31·9 | 0·2 | ... | 0·1 | 14 | — : 10 : — | 9·9 | Id. |
| | 4 | 082 | 32·0 | 31·9 | 0·1 | ... | 0·1 | 22 | | 10·0 | Cirro-stratous scud. |
| | 5 | 088 | 31·3 | 31·2 | 0·1 | ... | 0·0 | 20 | | 10·0 | Id. |
| | 6 | 103 | 30·9 | 30·9 | 0·0 | ... | 0·0 | 10 | | 10·0 | Id.? |
| | 7 | 108 | 30·7 | 30·6 | 0·1 | ... | 0·0 | 6 | | 10·0 | Id.? |
| | 8 | 117 | 30·4 | 30·3 | 0·1 | ... | 0·0 | 16 | | 10·0 | Id. |
| | 9 | 127 | 31·7 | 30·9 | 0·8 | ... | 0·0 | 6 | | 10·0 | Id.? |
| | 10 | 131 | 30·7 | 30·4 | 0·3 | ... | 0·0 | 7 | | 10·0 | Id.? |
| | 11 | 131 | 30·2 | 30·0 | 0·2 | ... | 0·0 | 24 | | 10·0 | Id.? |
| | 12 | 127 | 30·4 | 30·0 | 0·4 | ... | 0·0 | | | 9·8 | Id.? |
| | 13 | 30·127 | 30·7 | 30·3 | 0·4 | ... | 0·0 | 24 | | 10·0 | Cirro-stratous scud? |
| | 14 | 125 | 31·4 | 31·2 | 0·2 | ... | 0·0 | 2 | | 10·0 | Id.? |
| | 15 | 128 | 32·1 | 31·9 | 0·2 | ... | 0·0 | 2 | | 10·0 | Id.? |
| | 16 | 124 | 32·5 | 32·1 | 0·4 | ... | 0·0 | 3 | | 10·0 | Id.? |
| | 17 | 116 | 32·9 | 32·4 | 0·5 | ... | 0·0 | 3 | | 10·0 | Id.? |
| | 18 | 116 | 32·8 | 32·5 | 0·3 | ... | 0·0 | 16 | | 10·0 | Id.? |
| | 19 | 114 | 32·6 | 32·5 | 0·1 | ... | 0·0 | 10 | | 10·0 | Id.? |
| | 20 | 116 | 32·9 | 32·5 | 0·4 | ... | 0·1 | 18 | | 10·0 | Id. |
| | 21 | 127 | 33·3 | 32·6 | 0·7 | ... | 0·1 | 10 | | 10·0 | Id. |
| | 22 | 139 | 33·9 | 33·0 | 0·9 | ... | 0·1 | 14 | — : 10 : — | 10·0 | Id.; cirro-strati; cirrous haze. |
| | 23 | 133 | 33·6 | 33·0 | 0·6 | ... | 0·1 | 16 | | 10·0 | Id.; cirrous mass. |
| 10 | 0 | 107 | 34·8 | 33·7 | 1·1 | ... | 0·1 | 4 | — : 8 : — | 10·0 | Id. |
| | 1 | 081 | 35·2 | 33·8 | 1·4 | ... | 0·1 | 3 | | 10·0 | Id.; cirrous mass. |
| | 2 | 070 | 35·1 | 33·8 | 1·3 | 0·1 | 0·0 | 6 | — : 8 : — | 10·0 | Id.; id.; |
| | 3 | 065 | 35·3 | 34·7 | 0·6 | 0·1 | 0·0 | 8 | 9 : — : — | 10·0 | Scud; cirro-stratous scud. |
| | 4 | 053 | 34·9 | 33·8 | 1·1 | 0·1 | 0·0 | 2 | 9 : — : — | 10·0 | Id.; id. |
| | 5 | 039 | 34·7 | 33·4 | 1·3 | 0·0 | 0·0 | 11 | | 10·0 | Id.; id. |
| | 6 | 025 | 35·0 | 33·6 | 1·4 | 0·0 | 0·0 | 6 | | 10·0 | Id.; id. |
| | 7 | 013 | 34·2 | 33·2 | 1·0 | 0·0 | 0·0 | 12 | | 10·0 | As before. |
| | 8 | 009 | 34·0 | 33·0 | 1·0 | 0·0 | 0·0 | 8 | | 10·0 | Id.; some flakes of snow. |
| | 9 | 30·001 | 33·9 | 32·9 | 1·0 | 0·0 | 0·0 | 10 | | 10·0 | Id. |
| | 10 | 29·987 | 34·0 | 32·6 | 1·4 | 0·0 | 0·0 | 9 | | 10·0 | Id. |
| | 11 | 979 | 33·7 | 32·2 | 1·5 | 0·0 | 0·0 | | | 10·0 | Id.; some flakes of snow. |
| | 12 | 971 | 33·2 | 32·2 | 1·0 | 0·1 | 0·0 | 2 | | 10·0 | Id. |
| | 13 | 29·947 | 32·2 | 32·0 | 0·2 | 0·0 | 0·0 | 3 | | 10·0 | As before. |

The direction of the wind is indicated by the number of the point of the compass, reckoning N. = 0, E. = 8, S. = 16, W. = 24. The motions of the three strata of clouds, Sc. (scud), C.-s. (cirro-stratus), and Cir. (cirrus), are indicated in a similar manner.

Dec. 7d 23h. Observation made at 23h 20m.

| Gött. Mean Time. | Barometer at 32°. | Thermometers. Dry. | Wet. | Diff. | Wind. Maximum force in 1h. | 10m. | From | Clouds, Sc. : C.-s. : Ci., moving from | Sky clouded. | Species of Clouds and Meteorological Remarks. |
|---|---|---|---|---|---|---|---|---|---|---|
| d. h. | in. | ° | ° | ° | lbs. | lbs. | pt. | pt. pt. pt. | 0—10. | |
| 10 14 | 29·929 | 32·2 | 31·8 | 0·4 | 0·0 | 0·0 | 3 | | 10·0 | As before. |
| 15 | 907 | 32·0 | 31·6 | 0·4 | 0·0 | 0·0 | 6 | | 10·0 | Id. |
| 16 | 894 | 32·8 | 31·4 | 1·4 | 0·0 | 0·0 | | | 10·0 | Id. |
| 17 | 874 | 32·6 | 31·4 | 1·2 | 0·0 | 0·0 | 2 | | 10·0 | Id. |
| 18 | 849 | 31·8 | 31·1 | 0·7 | 0·0 | 0·0 | | | 10·0 | Id. |
| 19 | 831 | 32·1 | 31·4 | 0·7 | 0·0 | 0·0 | 10 | | 10·0 | Id. |
| 20 | 820 | 31·8 | 31·0 | 0·8 | 0·0 | 0·0 | 10 | | 10·0 | Id. |
| 21 | 816 | 31·7 | 30·9 | 0·8 | 0·0 | 0·0 | 20 | 10 : — : — | 10·0 | Thin scud ; cirro-stratous scud. |
| 22 | 810 | 31·1 | 30·4 | 0·7 | 0·0 | 0·0 | 18 | 12 : — : — | 10·0 | Thick scud ; foggy to E. |
| 23 | 803 | 31·8 | 31·4 | 0·4 | 0·0 | 0·0 | 18 | — : 10 : — | 10·0 | Cirro-stratous scud. |
| 11 0 | 787 | 32·0 | 31·7 | 0·3 | 0·0 | 0·0 | 20 | — : 10 : — | 10·0 | Id. ; a few fine particles of snow. |
| 1 | 768 | 32·1 | 31·7 | 0·4 | 0·0 | 0·0 | 18 | | 10·0 | Id. ; foggy to E. and N. |
| 2 | 757 | 32·1 | 31·7 | 0·4 | 0·0 | 0·0 | 20 | — : 12 : — | 10·0 | Id. ; flakes of snow. |
| 3 | 748 | 32·0 | 31·7 | 0·3 | 0·0 | 0·0 | 16 | | 10·0 | Id. ; id. |
| 4 | 753 | 32·3 | 31·7 | 0·6 | 0·0 | 0·0 | 12 | | 10·0 | Id. ; id. |
| 5 | 754 | 32·0 | 31·2 | 0·8 | 0·0 | 0·0 | 14 | — : 12 : — | 10·0 | Id. ; id. |
| 6 | 762 | 31·5 | 30·7 | 0·8 | 0·1 | 0·0 | 13 | | 10·0 | Id. ; id. |
| 7 | 771 | 31·1 | 30·3 | 0·8 | 0·0 | 0·0 | 12 | | 10·0 | Id. |
| 8 | 778 | 30·7 | 29·8 | 0·9 | 0·0 | 0·0 | 14 | | 10·0 | Id. |
| 9 | 786 | 30·2 | 29·3 | 0·9 | 0·1 | 0·0 | 17 | | 10·0 | Id. |
| 10 | 798 | 30·2 | 29·0 | 1·2 | 0·1 | 0·0 | 18 | | 10·0 | Id. |
| 11 | 800 | 30·0 | 28·8 | 1·2 | 0·0 | 0·0 | 16 | | 10·0 | Id. |
| 12 | 800 | 29·7 | 28·6 | 1·1 | 0·0 | 0·0 | 15 | | 10·0 | Id. |
| 13 | 29·801 | 29·7 | 28·6 | 1·1 | 0·0 | 0·0 | 10 | | 10·0 | Cirro-stratous scud. |
| 14 | 800 | 30·1 | 28·6 | 1·5 | 0·0 | 0·0 | 13 | | 10·0 | Id. |
| 15 | 807 | 29·7 | 28·6 | 1·1 | 0·0 | 0·0 | 15 | | 10·0 | Id. |
| 16 | 816 | 30·0 | 28·6 | 1·4 | 0·0 | 0·0 | 12 | | 10·0 | Id. |
| 17 | 807 | 30·2 | 28·5 | 1·7 | 0·0 | 0·0 | 5 | | 10·0 | Id. |
| 18 | 805 | 29·7 | 28·5 | 1·2 | 0·0 | 0·0 | 9 | | 10·0 | Id. |
| 19 | 804 | 30·0 | 27·7 | 2·3 | 0·0 | 0·0 | 11 | | 10·0 | Id. |
| 20 | 806 | 30·3 | 29·0 | 1·3 | 0·0 | 0·0 | 8 | | 9·9 | Id. ; streak of sky to E. |
| 21 | 808 | 30·1 | 28·9 | 1·2 | 0·0 | 0·0 | 12 | — : 12 : — | 10·0 | Id. |
| 22 | 811 | 30·6 | 29·4 | 1·2 | 0·0 | 0·0 | | 12 : — : — | 10·0 | Scud ; cirro-stratous scud. |
| 23 | 807 | 31·0 | 29·7 | 1·3 | 0·1 | 0·0 | 1 | 12 : — : — | 10·0 | Id. |
| 12 0 | 793 | 32·6 | 30·4 | 2·2 | 0·1 | 0·1 | 12 | 12 : — : — | 10·0 | Id. ; cirro-stratous scud. |
| 1 | 787 | 33·0 | 31·0 | 2·0 | 0·1 | 0·1 | 12 | 12 : — : — | 10·0 | Id. ; cirrous mass. |
| 2 | 779 | 33·0 | 32·0 | 1·0 | 0·1 | 0·1 | 12 | 12 : — : — | 10·0 | Id. ; id. ; haze. |
| 3 | 763 | 32·7 | 31·7 | 1·0 | 0·2 | 0·1 | 12 | 12 : — : — | 10·0 | Id. ; id. ; id. |
| 4 | 756 | 32·4 | 30·8 | 1·6 | 0·1 | 0·1 | 12 | | 10·0 | Id. ; id. ; id. |
| 5 | 741 | 31·8 | 30·1 | 1·7 | 0·3 | 0·0 | 12 | | 10·0 | Scud ; cirro-stratous scud. |
| 6 | 723 | 31·4 | 29·6 | 1·8 | 0·4 | 0·1 | 14 | | 9·8 | Id. ; id. ; milky sky to SW. |
| 7 | 703 | 30·7 | 29·3 | 1·4 | 0·1 | 0·0 | 9 | | 10·0 | Id. ; id. ? |
| 8 | 697 | 31·4 | 30·3 | 1·1 | 0·1 | 0·1 | 10 | | 10·0 | Id. ; flakes of snow. |
| 9 | 688 | 30·4 | 29·8 | 0·6 | 0·1 | 0·0 | 10 | | 10·0 | Id. ; very dark ; flakes of snow. |
| 10 | 675 | 33·9 | 31·3 | 2·6 | 0·8 | 0·6 | 12 | | 10·0 | Id. ; showers of hail-snow since 9h. |
| 11 | 673 | 33·2 | 30·7 | 2·5 | 2·7 | 0·9 | 11 | | 10·0 | Id. ; cirro-stratous scud. |
| 12 | 656 | 33·0 | 30·6 | 2·4 | 1·0 | 0·4 | 9 | | 10·0 | The same. |
| 13 | 29·637 | 33·3 | 30·5 | 2·8 | 1·1 | 0·4 | 8 | | 10·0 | The same. |
| 14 | 610 | 33·1 | 30·3 | 2·8 | 1·1 | 0·5 | 9 | | 10·0 | Id. |
| 15 | 583 | 31·9 | 29·4 | 2·5 | 0·7 | 0·1 | 8 | | 2·5 | Thin clouds. |
| 16 | 564 | 31·0 | 30·0 | 1·0 | 0·5 | 0·2 | 6 | | 2·5 | Snow0·5 ; at 15h 58m sky clouded = 10·0, snow1 |
| 17 | 531 | 30·7 | 29·7 | 1·0 | 0·7 | 0·1 | 7 | | 10·0 | Shower of snow1 |
| 18 | 516 | 30·6 | 29·6 | 1·0 | 0·1 | 0·0 | 8 | | 7·0 | Thin clouds. |
| 19 | 495 | 31·1 | 29·0 | 2·1 | 1·3 | 0·6 | 6 | | 5·0 | Cirro-stratous scud ? thin clouds. |
| 20 | 477 | 28·4 | 27·1 | 1·3 | 0·6 | 0·3 | 9 | | 2·0 | Id., with cirrous edges. |
| 21 | 478 | 28·8 | 27·4 | 1·4 | 0·4 | 0·3 | 8 | | 10·0 | Id. ; snow3 |

The direction of the wind is indicated by the number of the point of the compass, reckoning N. = 0, E. = 8, S. = 16, W. = 24. The motions of the three strata of clouds, Sc. (scud), C.-s. (cirro-stratus), and Cir. (cirrus), are indicated in a similar manner.

| Gött. Mean Time. | | Barometer at 32°. | Thermometers. Dry. | Wet. | Diff. | Wind. Maximum force in 1h. | 10m. | From | Clouds, Sc. : C.-s. : Ci., moving from | Sky clouded. | Species of Clouds and Meteorological Remarks. |
|---|---|---|---|---|---|---|---|---|---|---|---|
| d. | h. | in. | ° | ° | ° | lbs. | lbs. | pt. | pt. pt. pt. | 0—10. | |
| 12 | 22 | 29·465 | 26·9 | 26·5 | 0·4 | 0·3 | 0·2 | 2 | — : 8 : — | 5·0 | Cirro-cumuli; loose cumuli; cumuli; haze. |
| | 23 | 460 | 27·8 | 27·4 | 0·4 | 0·3 | 0·2 | 3 | | 9·0 | Id.; cumuli; snow[1] |
| 13 | 0 | 447 | 28·0 | 27·7 | 0·3 | 0·4 | 0·0 | 10 | | 9·8 | Cir.-str. scud and cum. with cir. edges; flakes of snow. |
| | 1 | 443 | 27·6 | 27·0 | 0·6 | 0·6 | 0·2 | 10 | — : 11 : — | 5·5 | Id. |
| | 2 | 435 | 28·2 | 26·8 | 1·4 | 0·2 | 0·1 | 10 | — : 10 : — | 7·0 | Cirro-cumulous scud; cirro-strati; cumuli. |
| | 3 | 428 | 27·2 | 26·3 | 0·9 | 0·0 | 0·0 | 7 | | 10·0 | Id.; snow[0·5] |
| | 4 | 428 | 26·2 | 25·8 | 0·4 | 0·1 | 0·0 | 7 | | 10·0 | Id.; snow[0·2] |
| | 5 | 428 | 26·5 | 26·0 | 0·5 | 0·0 | 0·0 | 6 | | 10·0 | Id.; homogeneous. |
| | 6 | 412 | 30·6 | 29·2 | 1·4 | 0·4 | 1·0 | 9 | | 10·0 | Homogeneous. |
| | 7 | 412 | 31·9 | 29·6 | 2·3 | 1·3 | 0·7 | 10 | | 10·0 | Id. |
| | 8 | 411 | 32·7 | 30·4 | 2·3 | 0·6 | 0·6 | 10 | | 10·0 | Id. |
| | 9 | 413 | 33·6 | 31·5 | 2·1 | 1·1 | 0·8 | 12 | | 10·0 | Id. |
| | 10 | 415 | 34·2 | 31·7 | 2·5 | 0·8 | 0·4 | 8 | | 10·0 | Id. |
| | 11 | 418 | 34·3 | 32·0 | 2·3 | 0·6 | 0·4 | 8 | | 10·0 | Id. |
| | 12 | 428 | 34·5 | 32·0 | 2·5 | 0·5 | 1·0 | 8 | | 10·0 | Id. |
| | 13 | 29·413 | 34·5 | 32·0 | 2·5 | 0·6 | 0·3 | 7 | | 10·0 | Homogeneous. |
| | 14 | 413 | 34·7 | 32·6 | 2·1 | 0·4 | 0·4 | 8 | | 10·0 | Id. |
| | 15 | 403 | 35·0 | 33·2 | 1·8 | 0·4 | 0·5 | 8 | | 10·0 | Id. |
| | 16 | 408 | 35·0 | 33·5 | 1·5 | 0·5 | 0·5 | 6 | | 10·0 | Id. |
| | 17 | 400 | 34·5 | 33·6 | 0·9 | 0·4 | 0·5 | 8 | | 9·0 | Scud; rain[0·2]? |
| | 18 | 400 | 34·1 | 33·4 | 0·7 | 1·0 | 1·0 | 7 | | 7·0 | Id. |
| | 19 | 406 | 34·8 | 34·0 | 0·8 | 0·8 | 0·6 | 8 | | 10·0 | Rain[0·5] |
| | 20 | 407 | 35·6 | 34·4 | 1·2 | 0·8 | 0·7 | 8 | | 10·0 | Id. |
| | 21 | 422 | 35·2 | 34·4 | 0·8 | 1·1 | 1·1 | 8 | 8 : — : — | 10·0 | Thin scud; cirrous clouds? rain[0·2] |
| | 22 | 430 | 35·7 | 34·6 | 1·1 | 0·9 | 0·4 | 8 | 8 : — : — | 10·0 | As before. |
| | 23 | 440 | 35·2 | 34·4 | 0·8 | 0·5 | 0·4 | 8 | | 10·0 | Id.; sleet[0·5] |
| 14 | 0 | 439 | 35·9 | 34·7 | 1·2 | 0·6 | 0·5 | 8 | | 10·0 | Id.; id. |
| | 1 | 439 | 36·0 | 34·7 | 1·3 | 0·9 | 0·5 | 10 | | 10·0 | Id.; id. |
| | 2 | 435 | 36·2 | 34·9 | 1·3 | 1·0 | 0·3 | 8 | 8 : — : — | 10·0 | Scud; cirro-strati. |
| | 3 | 442 | 35·9 | 34·3 | 1·6 | 0·7 | 0·6 | 8 | | 10·0 | The same; sleet[0·5] |
| | 4 | 444 | 35·0 | 34·0 | 1·0 | 1·5 | 0·8 | 4 | 8 : — : — | 10·0 | Id.; sleet[0·2] |
| | 5 | 447 | 35·4 | 34·0 | 1·4 | 1·3 | 0·6 | 6 | | 10·0 | Id. |
| | 6 | 450 | 35·1 | 33·9 | 1·2 | 1·6 | 0·7 | 7 | | 10·0 | Id. |
| | 7 | 452 | 35·0 | 34·1 | 0·9 | 1·6 | 0·9 | 7 | | 10·0 | Id. |
| | 8 | 465 | 35·1 | 34·3 | 0·8 | 1·2 | 0·6 | 8 | | 10·0 | Id.; sleet[0·5] |
| | 9 | 469 | 35·4 | 34·3 | 1·1 | 1·2 | 1·2 | 8 | | 10·0 | Id.; sleet[0·2] |
| | 10 | 465 | 34·2 | 33·6 | 0·6 | 1·0 | 0·5 | 4 | | 10·0 | Id. |
| | 11 | 466 | 34·8 | 34·1 | 0·7 | 0·3 | 0·8 | 7 | | 9·5 | Id.; rain[0·5] |
| | 12 | 464 | 34·8 | 34·1 | 0·7 | 0·7 | 0·3 | 4 | | 9·5 | Scud and thin clouds. |
| | 23 | 29·447 | 34·7 | 34·1 | 0·6 | 0·4 | 0·0 | 4 | | ..... | Sunday—Cloudy; thick cir.-str. scud; loose scud below. |
| 15 | 13 | 29·398 | 33·8 | 32·7 | 1·1 | 0·4 | 0·0 | 6 | | 10·0 | Dark. |
| | 14 | 389 | 33·8 | 32·7 | 1·1 | 0·0 | 0·0 | 2 | | 10·0 | Id. |
| | 15 | 381 | 33·7 | 32·7 | 1·0 | 0·0 | 0·0 | 4 | | 10·0 | Id. |
| | 16 | 360 | 34·4 | 33·2 | 1·2 | 0·0 | 0·0 | | | 10·0 | Id.; shower[0·5] |
| | 17 | 356 | 33·9 | 33·2 | 0·7 | 0·0 | 0·0 | 6 | | 10·0 | Id. |
| | 18 | 352 | 35·6 | 35·0 | 0·6 | 0·0 | 0·0 | 6 | | 10·0 | Id.; passing showers[0·5] |
| | 19 | 346 | 36·7 | 35·8 | 0·9 | 0·1 | 0·1 | 5 | | 9·9 | Scud. |
| | 20 | 335 | 36·2 | 35·5 | 0·7 | 0·1 | 0·1 | 8 | | 10·0 | Id. |
| | 21 | 347 | 36·7 | 35·9 | 0·8 | 0·3 | 0·1 | 7 | 10 : — : — | 10·0 | Id. |
| | 22 | 357 | 36·2 | 35·5 | 0·7 | 0·2 | 0·1 | 7 | 9 : — : — | 9·9 | Id.; cirro-strati. |
| | 23 | 356 | 37·2 | 36·3 | 0·9 | 0·2 | 0·1 | 7 | 9 : — : — | 9·9 | Id.; id.; haze. |
| 16 | 0 | 354 | 36·9 | 36·3 | 0·6 | 0·4 | 0·1 | 8 | 9 : — : — | 9·9 | Id.; id.; id. |
| | 1 | 339 | 37·9 | 36·7 | 1·2 | 0·3 | 0·1 | 6 | 9 : — : — | 10·0 | Id.; id.; id. |
| | 2 | 325 | 38·4 | 36·6 | 1·8 | 0·3 | 0·3 | 7 | 9 : — : — | 9·9 | Id.; showers around. |
| | 3 | 321 | 37·3 | 36·2 | 1·1 | 0·4 | 0·1 | 6 | 8 : — : — | 9·8 | Id.; cirro-stratous scud; passing showers. |
| | 4 | 322 | 36·7 | 36·0 | 0·7 | 0·4 | 0·3 | 6 | 9 : — : — | 10·0 | Id.; id.; id. |

The direction of the wind is indicated by the number of the point of the compass, reckoning N. = 0, E. = 8, S. = 16, W. = 24. The motions of the three strata of clouds, Sc. (scud), C.-s. (cirro-stratus), and Cir. (cirrus), are indicated in a similar manner.

| Gött. Mean Time. | | Barometer at 32°. | Thermometers. Dry. | Wet. | Diff. | Wind. Maximum force in 1h. | 10m. | From | Clouds, Sc. : C.-s. : Ci., moving from | Sky clouded. | Species of Clouds and Meteorological Remarks. |
|---|---|---|---|---|---|---|---|---|---|---|---|
| d. | h. | in. | ° | ° | ° | lbs. | lbs. | pt. | pt. pt. pt. | 0—10. | |
| 16 | 5 | 29·318 | 37·3 | 36·4 | 0·9 | 0·3 | 0·5 | 7 | | 10·0 | Scud ; cirro-stratous scud ; rain$^{0\cdot5}$ |
| | 6 | 318 | 37·3 | 36·2 | 1·1 | 0·6 | 0·7 | 7 | | 10·0 | Loose scud ; cirro-strati ; id. |
| | 7 | 315 | 37·4 | 36·4 | 1·0 | 0·7 | 0·3 | 6 | | 10·0 | As before ; rain$^{0\cdot2}$ |
| | 8 | 309 | 37·1 | 36·0 | 1·1 | 0·4 | 0·0 | 6 | | 10·0 | Id. ; id. |
| | 9 | 311 | 37·0 | 36·0 | 1·0 | 0·4 | 0·4 | 6 | | 10·0 | Id. ; passing showers. |
| | 10 | 304 | 37·2 | 36·3 | 0·9 | 0·4 | 0·1 | 5 | | 10·0 | Id. ; id. |
| | 11 | 300 | 37·6 | 36·3 | 1·3 | 0·6 | 0·2 | 4 | | 10·0 | Id. ; rain$^{0\cdot5}$ ; dark. |
| | 12 | 298 | 37·4 | 36·7 | 0·7 | 0·8 | 0·7 | 6 | | 10·0 | Id. ; id. ; id. |
| | 13 | 29·278 | 37·2 | 36·7 | 0·5 | 0·6 | 0·6 | 6 | | 10·0 | As before ; rain$^{0\cdot5}$ ; dark. |
| | 14 | 272 | 37·5 | 37·0 | 0·5 | 0·4 | 0·1 | 4 | | 10·0 | Id. ; id. ; id. |
| | 15 | 270 | 37·9 | 37·3 | 0·6 | 0·2 | 0·1 | 4 | | 10·0 | Id. ; id. |
| | 16 | 258 | 38·2 | 37·8 | 0·4 | 0·4 | 0·2 | 5 | | 10·0 | Id. ; rain$^{1}$ |
| | 17 | 245 | 38·2 | 38·0 | 0·2 | 0·2 | 0·2 | 10 | | 10·0 | Id. ; rain$^{0\cdot2}$ |
| | 18 | 241 | 38·2 | 38·0 | 0·2 | 0·2 | 0·0 | 4 | | 10·0 | Id. ; rain$^{0\cdot5}$ |
| | 19 | 234 | 38·0 | 37·6 | 0·4 | 0·0 | 0·0 | 3 | | 10·0 | Id. |
| | 20 | 236 | 37·7 | 37·4 | 0·3 | 0·0 | 0·0 | 3 | | 10·0 | Id. |
| | 21 | 246 | 37·8 | 37·4 | 0·4 | 0·0 | 0·0 | 4 | | 10·0 | Misty, objects invisible 1 mile off. |
| | 22 | 248 | 38·1 | 37·8 | 0·3 | 0·0 | 0·0 | 3 | | 10·0 | The same. |
| | 23 | 260 | 38·5 | 38·2 | 0·3 | 0·0 | 0·0 | 3 | | 10·0 | Mist rather thicker. |
| 17 | 0 | 256 | 38·4 | 38·2 | 0·2 | 0·0 | 0·0 | | | 10·0 | Scotch mist, objects invisible at 400 yards. |
| | 1 | 239 | 41·0 | 40·6 | 0·4 | 0·0 | 0·0 | | | 10·0 | Fog clearing off rapidly. ● |
| | 2 | 230 | 41·4 | 40·9 | 0·5 | 0·0 | 0·0 | 4 | 4 : — : — | 9·9 | Misty scud ; cirro-cumuli ; cirro-strati. |
| | 3 | 237 | 40·4 | 40·0 | 0·4 | 0·0 | 0·0 | 6 | | 10·0 | Homogeneous ; slight mist. |
| | 4 | 246 | 39·3 | 39·0 | 0·3 | 0·0 | 0·0 | | | 10·0 | Id. ; fog increasing. |
| | 5 | 244 | 37·9 | 37·7 | 0·2 | 0·0 | 0·0 | 20 v. | | 10·0 | Fog, objects invisible at 200 yards. |
| | 6 | 257 | 37·9 | 37·7 | 0·2 | 0·1 | 0·0 | 25 | | 10·0 | Id., id. |
| | 7 | 265 | 37·2 | 37·0 | 0·2 | 0·0 | 0·0 | 23 | | 10·0 | Id., id. |
| | 8 | 275 | 37·1 | 36·9 | 0·2 | 0·0 | 0·0 | 22 | | 10·0 | Id., objects invisible at 400 yards. |
| | 9 | 286 | 37·6 | 37·4 | 0·2 | 0·1 | 0·0 | 23 | | 10·0 | Id. |
| | 10 | 293 | 36·8 | 36·6 | 0·2 | 0·0 | 0·0 | 24 | | 10·0 | Scotch mist. |
| | 11 | 319 | 36·7 | 36·4 | 0·3 | 0·0 | 0·0 | 2 | | 10·0 | Thick Scotch mist. |
| | 12 | 330 | 37·0 | 36·7 | 0·3 | 0·0 | 0·0 | 2 | | 10·0 | Id. |
| | 13 | 29·333 | 37·6 | 37·3 | 0·3 | 0·0 | 0·0 | | | 10·0 | Thick Scotch mist. |
| | 14 | 335 | 37·9 | 37·7 | 0·2 | 0·0 | 0·0 | | | 10·0 | Id. |
| | 15 | 348 | 38·8 | 38·4 | 0·4 | 0·0 | 0·0 | 4 | | 10·0 | Scotch mist, not so dense. |
| | 16 | 362 | 38·4 | 38·0 | 0·4 | 0·0 | 0·0 | 4 | | 10·0 | Id., denser than last. |
| | 17 | 374 | 39·0 | 38·7 | 0·3 | 0·1 | 0·1 | 4 | | 10·0 | Mist nearly away. |
| | 18 | 396 | 39·3 | 39·0 | 0·3 | 0·1 | 0·0 | 4 | | 10·0 | Fog away ? |
| | 19 | 428 | 38·9 | 38·7 | 0·2 | 0·0 | 0·0 | 4 | | 10·0 | Scud. |
| | 20 | 451 | 39·0 | 38·8 | 0·2 | 0·1 | 0·1 | 5 | | 10·0 | Id. ; drops of rain. |
| | 21 | 472 | 38·7 | 38·1 | 0·6 | 0·1 | 0·0 | 4 | | 10·0 | Loose scud, cirro-strati, and cirrous clouds. |
| | 22 | 498 | 38·0 | 37·3 | 0·7 | 0·0 | 0·0 | 4 | 12 : — : — | 9·9 | Scud ; cirro-cumuli ; cirro-strati. ◐ |
| | 23 | 529 | 39·2 | 38·0 | 1·2 | 0·2 | 0·1 | 4 | | 9·9 | Id. ; cirrous scud ; id. |
| 18 | 0 | 561 | 40·2 | 39·0 | 1·2 | 0·1 | 0·0 | 4 | — : 10 : — | 10·0 | Cirro-stratous scud ; id. ; rain$^{0\cdot2}$ |
| | 1 | 573 | 39·8 | 39·2 | 0·6 | 0·2 | 0·1 | 4 | 8 : — : — | 10·0 | Scud ; cirro-strati ; drops of rain. |
| | 2 | 586 | 39·8 | 38·8 | 1·0 | 0·3 | 0·1 | 5 | 8 : — : — | 10·0 | Id. ; id. |
| | 3 | 616 | 39·7 | 39·0 | 0·7 | 0·2 | 0·1 | 4 | 6 : — : — | 10·0 | Id. ; id. ; wavy cirro-strati. |
| | 4 | 642 | 39·3 | 38·3 | 1·0 | 0·1 | 0·0 | 3 | 6 : — : — | 10·0 | Id. ; id. ; id. |
| | 5 | 664 | 38·7 | 37·6 | 1·1 | 0·2 | 0·1 | 2 | | 10·0 | Cirro-cumulous scud ; cirro-strati. |
| | 6 | 693 | 37·4 | 36·7 | 0·7 | 0·1 | 0·0 | 6 | | 9·8 | Scud ; watery cirro-cumuli. ☔ |
| | 7 | 723 | 36·7 | 36·2 | 0·5 | 0·0 | 0·0 | 5 | 6 : — : — | 9·8 | Id. ; id. ; shower lately. ☔ |
| | 8 | 752 | 37·3 | 36·2 | 1·1 | 0·0 | 0·0 | 20 | 6 : — : — | 9·9 | Id. ; id. ; id. ☔ |
| | 9 | 784 | 37·6 | 36·7 | 0·9 | 0·0 | 0·0 | 2 | | 10·0 | Id. ; id. ; id. |
| | 10 | 801 | 36·7 | 36·1 | 0·6 | 0·1 | 0·0 | 7 | | 9·8 | Id. ; id. ; rain$^{0\cdot5}$ |
| | 11 | 841 | 36·8 | 36·2 | 0·6 | 0·1 | 0·0 | 2 | | 10·0 | Id. |
| | 12 | 858 | 36·6 | 36·1 | 0·5 | 0·1 | 0·1 | 2 | | 10·0 | Id. |

The direction of the wind is indicated by the number of the point of the compass, reckoning N. = 0, E. = 8, S. = 16, W. = 24. The motions of the three strata of clouds, Sc. (scud), C.-s. (cirro-stratus), and Cir. (cirrus), are indicated in a similar manner.

| Gött. Mean Time. | | Barometer at 32°. | Thermometers. Dry. | Wet. | Diff. | Wind. Maximum force in 1h. | 10m. | From | Clouds, Sc. : C.-s. : Ci., moving from | Sky clouded. | Species of Clouds and Meteorological Remarks. | |
|---|---|---|---|---|---|---|---|---|---|---|---|---|
| d. | h. | in. | ° | ° | ° | lbs. | lbs. | pt. | pt. pt. pt. | 0—10. | | |
| 18 | 13 | 29·870 | 36·0 | 35·4 | 0·6 | 0·1 | 0·0 | 2 | | 10·0 | Scud. | |
| | 14 | 882 | 36·2 | 35·6 | 0·6 | 0·1 | 0·0 | | | 10·0 | Scud and cirro-strati. | |
| | 15 | 911 | 35·7 | 35·3 | 0·4 | 0·0 | 0·0 | | | 10·0 | The same. | |
| | 16 | 932 | 34·6 | 34·3 | 0·3 | 0·0 | 0·0 | | | 6·0 | Id. | |
| | 17 | 957 | 35·2 | 34·9 | 0·3 | 0·0 | 0·0 | | | 10·0 | Id. | |
| | 18 | 29·972 | 36·1 | 35·6 | 0·5 | 0·0 | 0·0 | 12 | | 10·0 | Id. | |
| | 19 | 30·002 | 35·3 | 34·9 | 0·4 | 0·0 | 0·0 | 12 | | 7·5 | Id. | |
| | 20 | 027 | 35·7 | 34·8 | 0·9 | 0·0 | 0·0 | 4 | | 9·5 | Id. | |
| | 21 | 059 | 35·6 | 34·5 | 1·1 | 0·0 | 0·0 | 1 | 8 : — : — | 9·9 | Scud; cirro-stratous scud. | |
| | 22 | 077 | 35·2 | 34·3 | 0·9 | 0·1 | 0·0 | 2 | 8 : 24 : — | 10·0 | Loose scud on E. hor.; cir.-cum.-str.; rain to E.? | |
| | 23 | 101 | 35·0 | 34·3 | 0·7 | 0·0 | 0·0 | 31 | 8 : 24 : — | 9·2 | As before; stratus to E. | |
| 19 | 0 | 106 | 35·3 | 34·4 | 0·9 | 0·1 | 0·0 | 2 | 8 : 24 : — | 4·0 | Id.; id. | ⊖ |
| | 1 | 100 | 35·7 | 34·8 | 0·9 | 0·1 | 0·1 | 1 | | 0·5 | Scud; cirro-cumulo-strati on horizon; stratus to E.? | ⊙ |
| | 2 | 112 | 38·7 | 36·8 | 1·9 | 0·1 | 0·0 | 7 | | 0·5 | Id.; id. | ⊙ |
| | 3 | 121 | 38·4 | 36·9 | 1·5 | 0·1 | 0·0 | 8 | | 0·5 | Cirro-strati and haze round horizon. | ⊙ |
| | 4 | 132 | 36·1 | 35·0 | 1·1 | 0·1 | 0·0 | 20 | | 0·5 | Cirro-strati; stratus to E. | ☽ |
| | 5 | 153 | 30·9 | 30·7 | 0·2 | 0·1 | 0·0 | 20 | | 0·2 | Id.; id. | ☽ |
| | 6 | 161 | 28·6 | 28·3 | ... | 0·0 | 0·0 | 19 | | 0·5 | Id.; id. | ☽ |
| | 7 | 180 | 29·4 | 29·6 | ... | 0·0 | 0·0 | | | 0·5 | Id.; id. | ☽ |
| | 8 | 200 | 27·6 | ... | ... | 0·0 | 0·0 | 18 | | 0·5 | Cirro-strati to NE. | ☽ |
| | 9 | 209 | 26·5 | ... | ... | 0·0 | 0·0 | | — : — : 2 | 3·0 | Woolly cirri; haze; lunar corona. | ☽ |
| | 10 | 220 | 25·2 | ... | ... | 0·0 | 0·0 | | | 3·0 | Cirro-strati; cirri. | ☽ |
| | 11 | 229 | 25·5 | 26·0 | ... | 0·0 | 0·0 | | | 1·5 | Id.; id.; lunar halo. | ☽ |
| | 12 | 236 | 26·7 | 27·0 | ... | 0·0 | 0·0 | | | 1·5 | Id.; id; id. | ☽ |
| | 13 | 30·238 | 26·1 | 26·3 | ... | 0·0 | 0·0 | | | 1·0 | Cirro-strati; haze; lunar halo. | ☽ |
| | 14 | 242 | 25·4 | 25·4 | ... | 0·0 | 0·0 | 20 | | 0·5 | Haze; lunar halo. | ☽ |
| | 15 | 250 | 25·2 | 25·3 | ... | 0·0 | 0·0 | 19 | | 1·0 | Cirro-strati and haze on horizon. | ☽ |
| | 16 | 252 | 24·6 | 24·7 | ... | 0·0 | 0·0 | | | 1·0 | Id. | ☽ |
| | 17 | 252 | 25·2 | 25·2 | ... | 0·0 | 0·0 | | | 1·0 | Id. | |
| | 18 | 257 | 23·2 | 23·3 | ... | 0·0 | 0·0 | 22 | | 1·0 | Id. | |
| | 19 | 267 | 21·5 | ... | ... | 0·0 | 0·0 | 20 | | 0·1 | Streak of cirro-strati to E. | |
| | 20 | 279 | 22·2 | 22·2 | ... | 0·0 | 0·0 | 20 | | 1·0 | Cirri, cirro-strati, chiefly to E. | |
| | 21 | 293 | 21·7 | 22·0 | ... | 0·0 | 0·0 | | | 5·0 | Cirro-cumuli; cirro-strati; woolly and wavy cirri. | |
| | 22 | 303 | 22·7 | 22·7 | ... | 0·0 | 0·0 | | — : 4 : — | 6·0 | As before. | ⊖ |
| | 23 | 320 | 25·3 | 25·1 | 0·2 | 0·0 | 0·0 | 20 | | 2·0 | Id. | |
| 20 | 0 | 311 | 26·4 | 26·5 | ... | 0·0 | 0·0 | 17 | | 0·5 | Cirro-strati and cirrous haze on horizon. | ⊙ |
| | 1 | 303 | 28·4 | 28·0 | 0·4 | 0·0 | 0·0 | 20 | | 0·4 | Band of cirri to N.; cirrous haze on horizon. | ⊙ |
| | 2 | 296 | 29·4 | 29·0 | 0·4 | 0·0 | 0·0 | 20 | | 0·1 | Haze on E. horizon. | ⊙ |
| | 3 | 288 | 29·1 | 29·0 | 0·1 | 0·0 | 0·0 | 20 | | 0·3 | Cirro-strati and haze on horizon. | ⊙ |
| | 4 | 292 | 25·8 | 26·0 | ... | 0·0 | 0·0 | 20 | | 1·0 | Haze and cirro-strati on horizon. | |
| | 5 | 288 | 24·4 | 24·2 | 0·2 | 0·0 | 0·0 | 18 | — : — : 8 | 0·8 | Patches of cirri and cir.-str.; dense haze on hor. | ☽ |
| | 6 | 295 | 21·9 | 22·2 | ... | 0·1 | 0·0 | | | 0·5 | Haze on horizon. | ☽ |
| | 7 | 293 | 21·9 | 21·7 | 0·2 | 0·1 | 0·0 | 17 | | 0·3 | Patches of cirri; haze on horizon. | ☽ |
| | 8 | 296 | 22·3 | 22·2 | 0·1 | 0·1 | 0·0 | | | 0·1 | Streaks of cirri; haze; small lunar corona. | ☽ |
| | 9 | 310 | 22·7 | 22·6 | 0·1 | 0·1 | 0·0 | 18 | | 0·2 | Cirri; cirrous haze. | ☽ |
| | 10 | 311 | 23·9 | 23·7 | 0·2 | 0·1 | 0·0 | 22 | — : 6 : — | 8·0 | Cirro-cumulous scud. | ☽ |
| | 11 | 314 | 25·7 | 25·2 | 0·5 | 0·0 | 0·0 | 28 | — : 5 : — | 9·5 | Cirro-stratous scud. | ☽ |
| | 12 | 309 | 25·8 | 25·4 | 0·4 | 0·0 | 0·0 | 22 | — : 5 : — | 2·0 | Cirro-cumulous scud. | ☽ |
| | 13 | 30·305 | 23·8 | 23·7 | 0·1 | 0·0 | 0·0 | 20 | — : 5 : — | 6·0 | Thin cirro-cumulous scud; fine lunar corona. | ☽ |
| | 14 | 301 | 23·5 | 23·3 | 0·2 | 0·0 | 0·0 | 24 | | 1·0 | Id.; cirro-strati? on E. hor. | ☽ |
| | 15 | 309 | 24·3 | 24·0 | 0·3 | 0·0 | 0·0 | 22 | — : 6 : — | 9·5 | Thick cirro-cumulous scud. | |
| | 16 | 303 | 24·2 | 24·0 | 0·2 | 0·0 | 0·0 | 18 | — : 6 : — | 9·0 | Id. | |
| | 17 | 298 | 23·7 | 23·8 | ... | 0·0 | 0·0 | 20 | | 8·0 | Id. | ☽ |
| | 18 | 293 | 25·3 | 25·0 | 0·3 | 0·0 | 0·0 | 21 | | 9·9 | Id. | |
| | 19 | 292 | 27·2 | 26·9 | 0·3 | 0·0 | 0·0 | 15 | | 10·0 | Id. | |
| | 20 | 292 | 27·9 | 27·5 | 0·4 | 0·0 | 0·0 | 2 | | 9·9 | Scud; streak of sky on S. horizon. | |

The direction of the wind is indicated by the number of the point of the compass, reckoning N. = 0, E. = 8, S. = 16, W. = 24. The motions of the three strata of clouds, Sc. (scud), C.-s. (cirro-stratus), and Cir. (cirrus), are indicated in a similar manner.

| Gött. Mean Time. | Barometer at 32°. | Thermometers. Dry. | Wet. | Diff. | Wind. Maximum force in 1h. | 10m. | From | Clouds, Sc. : C.-s. : Ci., moving from | Sky clouded. | Species of Clouds and Meteorological Remarks. |
|---|---|---|---|---|---|---|---|---|---|---|
| d. h. | in. | ° | ° | ° | lbs. | lbs. | pt. | pt. pt. pt. | 0—10. | |
| 20 21 | 30·302 | 27·9 | 27·6 | 0·3 | 0·0 | 0·0 | 20 | 8 : — : — | 6·5 | Scud. |
| 22 | 320 | 26·3 | 26·3 | ... | 0·0 | 0·0 | 24 | — : 10 : — | 7·0 | Cirro-cumulous scud; cirri; cirro-strati. |
| 23 | 325 | 29·2 | 28·7 | 0·5 | 0·0 | 0·1 | | — : 12 : — | 9·9 | Cirro-stratous scud; cumuli to NE.; slight mist. |
| 21 0 | 317 | 31·4 | 31·0 | 0·4 | 0·0 | 0·0 | 17 | — : 14 : — | 9·0 | Cirro-cumulous scud; cirro-strati; haze. |
| 1 | 314 | 31·9 | 31·4 | 0·5 | 0·0 | 0·1 | 20 | — : 14 : — | 9·5 | Id.; id.; id. |
| 2 | 314 | 32·5 | 32·0 | 0·5 | 0·0 | 0·0 | 23 | — : 14 : — | 9·5 | Large cirro-cumuli; id.; id. ⊖ |
| 3 | 312 | 32·7 | 32·1 | 0·6 | 0·0 | 0·0 | 2 | — : 14 : — | 9·8 | Cirro-stratous scud; id.; id. |
| 4 | 313 | 32·0 | 31·6 | 0·4 | 0·0 | 0·0 | 31 | — : 12 : — | 9·0 | Id.; id.; bank of cir.-str. to W. |
| 5 | 325 | 31·6 | 31·1 | 0·5 | 0·0 | 0·0 | 0 | | 10·0 | Id. |
| 6 | 329 | 31·7 | 31·2 | 0·5 | 0·0 | 0·0 | 2 | | 10·0 | Id.; fine particles of snow. |
| 7 | 330 | 31·7 | 31·2 | 0·5 | 0·0 | 0·0 | 4 | | 10·0 | Id. |
| 8 | 333 | 32·0 | 31·6 | 0·4 | 0·0 | 0·0 | | | 10·0 | Id. |
| 9 | 329 | 32·2 | 31·7 | 0·5 | 0·0 | 0·0 | 9 | — : 9 : — | 9·8 | Id. |
| 10 | 328 | 34·6 | 32·6 | 2·0 | 0·0 | 0·0 | 4 | | 8·8 | Id.; lunar corona. ☽ |
| 11 | 328 | 33·1 | 32·1 | 1·0 | 0·0 | 0·0 | 6 | 10 : — : — | 4·0 | Scud; cirro-cumulous scud. ☽ |
| 12 | 326 | 33·1 | 31·1 | 2·0 | 0·0 | 0·0 | 8 | | 4·0 | The same; the scud causes a corona. ☽ |
| 22 0 | 30·287 | 35·7 | 33·7 | 2·0 | 0·0 | 0·0 | 12 | — : 12 : — | ..... | Sunday—Cloudy; chiefly cirro-stratous scud. |
| 13 | 30·138 | 36·9 | 36·5 | 0·4 | 0·1 | 0·1 | 8 | | 9·9 | Cirro-stratous scud. |
| 14 | 128 | 35·9 | 34·2 | 1·7 | 0·1 | 0·1 | 8 | — : 12 : — | 9·9 | Id. |
| 15 | 122 | 36·7 | 34·2 | 2·5 | 0·1 | 0·1 | 7 | | 10·0 | Id. |
| 16 | 116 | 37·2 | 34·2 | 3·0 | 0·1 | 0·1 | 10 | | 10·0 | Id. |
| 17 | 104 | 35·9 | 33·7 | 2·2 | 0·1 | 0·0 | 8 | | 10·0 | Id. |
| 18 | 104 | 35·8 | 33·4 | 2·4 | 0·1 | 0·0 | 7 | | 10·0 | Id. |
| 19 | 112 | 35·7 | 33·1 | 2·6 | 0·0 | 0·0 | 12 | | 10·0 | Id. |
| 20 | 102 | 35·6 | 32·9 | 2·7 | 0·0 | 0·0 | 10 | | 10·0 | Id. |
| 21 | 120 | 34·8 | 32·6 | 2·2 | 0·1 | 0·0 | 12 | — : 10 : — | 9·9 | Id. |
| 22 | 124 | 34·7 | 32·4 | 2·3 | 0·0 | 0·0 | 6 | — : 10 : — | 9·5 | Id. slight fog to E. |
| 23 | 128 | 35·0 | 32·9 | 2·1 | 0·0 | 0·0 | 4 | — : 10 : — | 9·6 | Id. |
| 23 0 | 127 | 36·0 | 33·2 | 2·8 | 0·0 | 0·0 | 8 | — : 12 : — | 9·9 | Id. |
| 1 | 117 | 36·4 | 34·3 | 2·1 | 0·0 | 0·0 | 10 | | 9·7 | Id. |
| 2 | 115 | 36·6 | 34·1 | 2·5 | 0·0 | 0·0 | 7 | — : 11 : — | 9·8 | Id. |
| 3 | 116 | 36·0 | 34·1 | 1·9 | 0·0 | 0·0 | 8 | | 9·9 | Id. |
| 4 | 110 | 35·7 | 33·2 | 2·5 | 0·0 | 0·0 | 9 | — : 11 : — | 10·0 | Id. |
| 5 | 113 | 35·2 | 33·0 | 2·2 | 0·0 | 0·0 | 8 | | 10·0 | Id. |
| 6 | 114 | 34·9 | 32·7 | 2·2 | 0·0 | 0·0 | 12 | | 10·0 | Id. |
| 7 | 113 | 34·0 | 32·3 | 1·7 | 0·0 | 0·0 | 10 | | 10·0 | Id. |
| 8 | 118 | 34·7 | 32·6 | 2·1 | 0·0 | 0·0 | 2 | | 10·0 | Id. |
| 9 | 121 | 34·0 | 32·5 | 1·5 | 0·1 | 0·0 | 0 | | 10·0 | Id. |
| 10 | 125 | 33·9 | 32·4 | 1·5 | 0·0 | 0·0 | 2 | | 10·0 | Id. |
| 11 | 128 | 33·8 | 32·6 | 1·2 | 0·0 | 0·0 | 18 | | 10·0 | Id. |
| 12 | 126 | 33·9 | 32·7 | 1·2 | 0·0 | 0·0 | 2 | | 10·0 | Id. |
| 13 | 30·122 | 34·2 | 33·4 | 0·8 | 0·0 | 0·0 | 2 | | 10·0 | Cirro-stratous scud. |
| 14 | 122 | 34·9 | 34·2 | 0·7 | 0·0 | 0·0 | 1 | | 10·0 | Id.; fine particles of rain. |
| 15 | 127 | 34·8 | 34·0 | 0·8 | 0·0 | 0·0 | 6 | | 10·0 | Id.; id. |
| 16 | 120 | 34·5 | 33·9 | 0·6 | 0·0 | 0·0 | 8 | | 10·0 | Id.; id. |
| 17 | 115 | 34·8 | 33·9 | 0·9 | 0·0 | 0·0 | 7 | | 10·0 | Id.; id. |
| 18 | 111 | 34·7 | 33·9 | 0·8 | 0·0 | 0·0 | 6 | | 10·0 | Id.; id. |
| 19 | 116 | 34·5 | 33·8 | 0·7 | 0·0 | 0·0 | 8 | | 10·0 | Id.; id. |
| 20 | 124 | 34·2 | 33·4 | 0·8 | 0·0 | 0·0 | 8 | | 10·0 | Id.; id. |
| 21 | 128 | 34·4 | 33·3 | 1·1 | 0·0 | 0·0 | 8 | — : 9 : — | 10·0 | Id.; id.; slight mist. |
| 22 | 134 | 33·7 | 33·2 | 0·5 | 0·0 | 0·0 | 6 | | 10·0 | Id.; id.; id. |
| 23 | 134 | 33·9 | 33·3 | 0·6 | 0·0 | 0·0 | 7 | | 10·0 | Id.; Scotch mist. |
| 24 0 | 133 | 33·8 | 33·3 | 0·5 | 0·0 | 0·0 | 15 | — : 10 : — | 10·0 | Id.; rain0·1 |
| 1 | 126 | 33·4 | 32·6 | 0·8 | 0·0 | 0·0 | 15 | — : 12 : — | 10·0 | Id.; fine particles of snow. |
| 2 | 124 | 33·0 | 32·0 | 1·0 | 0·0 | 0·0 | 14 | — : 12 : — | 10·0 | Id. |

The direction of the wind is indicated by the number of the point of the compass, reckoning N. = 0, E. = 8, S. = 16, W. = 24. The motions of the three strata of clouds, Sc. (scud), C.-s. (cirro-stratus), and Cir. (cirrus), are indicated in a similar manner.
Dec. 22d 0h. Observation made at 23h 45m.

| Gött. Mean Time. | Barometer at 32°. | Thermometers. Dry. | Wet. | Diff. | Wind. Maximum force in 1h. | 10m. | From | Clouds, Sc. : C.-s. : Ci., moving from | Sky clouded. | Species of Clouds and Meteorological Remarks. |
|---|---|---|---|---|---|---|---|---|---|---|
| d. h. | in. | ° | ° | ° | lbs. | lbs. | pt. | pt. pt. pt. | 0—10. | |
| 24 3 | 30·127 | 32·7 | 31·0 | 1·7 | 0·2 | 0·1 | 14 | — : 12 : — | 10·0 | Cirro-stratous scud. |
| 4 | 126 | 31·8 | 29·8 | 2·0 | 0·2 | 0·1 | 14 | — : 14 : — | 10·0 | Id. |
| 5 | 128 | 31·2 | 29·4 | 1·8 | 0·1 | 0·0 | 24 v. | | 10·0 | Id. |
| 6 | 131 | 31·5 | 29·4 | 2·1 | 0·2 | 0·2 | 15 | | 10·0 | Id. |
| 7 | 137 | 31·3 | 29·3 | 2·0 | 0·1 | 0·0 | 15 | | 10·0 | Id. |
| 8 | 135 | 31·3 | 29·5 | 1·8 | 0·0 | 0·0 | 10 | | 10·0 | Id. |
| 9 | 140 | 31·4 | 29·8 | 1·6 | 0·0 | 0·0 | 10 | | 10·0 | Id. |
| 10 | 143 | 31·7 | 30·5 | 1·2 | 0·0 | 0·0 | 16 | | 10·0 | Id.; fine particles of rain. |
| 11 | 138 | 31·6 | 30·5 | 1·1 | 0·0 | 0·0 | 16 | | 10·0 | Id.; id. |
| 12 | 130 | 31·5 | 31·1 | 0·4 | 0·0 | 0·0 | | | 10·0 | Id.; id. |
| 13 | 30·120 | 31·5 | 31·0 | 0·5 | 0·0 | 0·0 | 20 | | 10·0 | Cirro-stratous scud; fine particles of rain. |
| 14 | 117 | 31·5 | 30·9 | 0·6 | 0·0 | 0·0 | 8 | | 10·0 | Id.; id. |
| 15 | 108 | 31·3 | 31·0 | 0·3 | 0·0 | 0·0 | 6 | | 10·0 | Id.; id. |
| 16 | 092 | 31·6 | 31·3 | 0·3 | 0·0 | 0·0 | 4 | | 10·0 | Id.; id. |
| 17 | 082 | 31·9 | 31·6 | 0·3 | 0·0 | 0·0 | 6 | | 10·0 | Id.; id. |
| 18 | 077 | 31·9 | 31·6 | 0·3 | 0·0 | 0·0 | 6 | | 10·0 | Id.; id. |
| 19 | 078 | 32·0 | 31·7 | 0·3 | 0·0 | 0·0 | 6 | | 10·0 | Id.; id. |
| 20 | 080 | 32·0 | 31·8 | 0·2 | 0·0 | 0·0 | 6 | | 10·0 | Id.; id. |
| 21 | 086 | 32·6 | 32·0 | 0·6 | 0·0 | 0·1 | 16 | — : 12 : — | 10·0 | Id. |
| 22 | 088 | 32·1 | 31·6 | 0·5 | 0·1 | 0·0 | 14 | — : 12 : — | 10·0 | Id. |
| 23 | 088 | 32·1 | 31·4 | 0·7 | 0·0 | 0·0 | 14 | — : 14 : — | 10·0 | Id. |
| 25 0 | 081 | 32·3 | 31·5 | 0·8 | 0·1 | 0·0 | 10 | — : 14 : — | 10·0 | Id. |
| 1 | 065 | 32·5 | 31·5 | 1·0 | 0·1 | 0·0 | 4 | — : 16 : — | 10·0 | Id. |
| 2 | 055 | 32·8 | 31·6 | 1·2 | 0·0 | 0·0 | 15 | | 10·0 | Id. |
| 3 | 049 | 32·7 | 31·3 | 1·4 | 0·3 | 0·2 | 13 | | 10·0 | Id. |
| 4 | 045 | 32·3 | 31·2 | 1·1 | 0·4 | 0·2 | 14 | | 10·0 | Id. |
| 5 | 043 | 32·1 | 31·3 | 0·8 | 0·3 | 0·1 | 14 | | 10·0 | Id. |
| 6 | 040 | 32·0 | 31·0 | 1·0 | 0·1 | 0·0 | 14 | | 10·0 | Id. |
| 7 | 039 | 32·0 | 31·0 | 1·0 | 0·1 | 0·0 | 15 | | 10·0 | Id. |
| 8 | 049 | 32·0 | 31·0 | 1·0 | 0·0 | 0·0 | 14 | | 10·0 | Id. |
| 9 | 049 | 31·9 | 30·8 | 1·1 | 0·1 | 0·1 | 14 | | 10·0 | Id. |
| 10 | 042 | 31·9 | 30·7 | 1·2 | 0·1 | 0·1 | 14 | | 10·0 | Id. |
| 11 | 032 | 31·4 | 30·1 | 1·3 | 0·1 | 0·1 | 15 | | 10·0 | Id. |
| 12 | 023 | 31·2 | 30·0 | 1·2 | 0·1 | 0·1 | 15 | | 10·0 | Id. |
| 13 | 30·011 | 30·9 | 30·2 | 0·7 | 0·5 | 0·3 | 15 | | 10·0 | Cirro-stratous scud. |
| 14 | 29·987 | 30·9 | 30·5 | 0·4 | 0·4 | 0·2 | 15 | | 10·0 | Id. |
| 15 | 979 | 31·2 | ... | .... | 1·3 | 0·3 | 10 | | 10·0 | Id. |
| 16 | 972 | 31·4 | 30·0 | 1·4 | 0·9 | 0·4 | 16 | | 10·0 | Id. |
| 17 | 960 | 31·6 | 30·3 | 1·3 | 0·7 | 0·4 | 14 | | 10·0 | Id. |
| 18 | 938 | 31·7 | 30·4 | 1·3 | 0·7 | 0·4 | 15 | | 10·0 | Id. |
| 19 | 936 | 31·8 | 30·6 | 1·2 | 0·4 | 0·2 | 15 | | 10·0 | Id. |
| 20 | 929 | 32·1 | 31·0 | 1·1 | 0·3 | 0·4 | 15 | | 10·0 | Id. |
| 21 | 942 | 32·4 | 31·3 | 1·1 | 0·5 | 0·1 | 16 | — : 16 : — | 10·0 | Id. |
| 22 | 935 | 32·5 | 31·2 | 1·3 | 0·2 | 0·2 | 14 | | 10·0 | Id. |
| 23 | 942 | 33·0 | 32·2 | 0·8 | 0·1 | 0·0 | 16 | — : 16 : — | 10·0 | Id. |
| 26 0 | 922 | 34·3 | 32·5 | 1·8 | 0·0 | 0·0 | 18 | 18 : — : — | 9·8 | Scud; cir.-str. scud; linear cirri; clouds breaking up. |
| 1 | 890 | 34·6 | 32·7 | 1·9 | 0·0 | 0·0 | 12 | 18 : — : — | 10·0 | Cirro-stratous scud. |
| 2 | 877 | 34·2 | 32·8 | 1·4 | 0·0 | 0·0 | 2 | | 10·0 | Id. |
| 3 | 873 | 33·6 | 32·6 | 1·0 | 0·0 | 0·0 | 4 | | 10·0 | Id. |
| 4 | 857 | 33·3 | 32·3 | 1·0 | 0·0 | 0·0 | 4 | | 10·0 | Id. |
| 5 | 851 | 33·4 | 32·7 | 0·7 | 0·0 | 0·0 | 4 | | 10·0 | Id. |
| 6 | 850 | 33·2 | 32·6 | 0·6 | 0·0 | 0·0 | | | 10·0 | Id.; foggy. |
| 7 | 849 | 34·3 | 33·4 | 0·9 | 0·2 | 0·2 | 14 | | 10·0 | Id.; dark. |
| 8 | 845 | 34·0 | 33·3 | 0·7 | 0·3 | 0·1 | 14 | | 10·0 | Id. |
| 9 | 846 | 34·0 | 33·4 | 0·6 | 0·1 | 0·1 | 15 | | 10·0 | Id. |
| 10 | 858 | 34·3 | 33·6 | 0·7 | 0·1 | 0·0 | 18 | | 10·0 | Id. |

The direction of the wind is indicated by the number of the point of the compass, reckoning N. = 0, E. = 8, S. = 16, W. = 24. The motions of the three strata of clouds, Sc. (scud), C.-s. (cirro-stratus), and Cir. (cirrus), are indicated in a similar manner.

Dec. 24d 17h. The very fine rain which has been falling during the night freezes on reaching the ground, covering every thing with a coating of ice.

| Gött. Mean Time. | | Barometer at 32°. | Thermometers. Dry. | Wet. | Diff. | Wind. Maximum force in 1h. | 10m. | From | Clouds, Sc. : C.-s. : Ci., moving from | Sky clouded. | Species of Clouds and Meteorological Remarks. |
|---|---|---|---|---|---|---|---|---|---|---|---|
| d. | h. | in. | ° | ° | ° | lbs. | lbs. | pt. | pt. pt. pt. | 0—10. | |
| 26 | 11 | 29·853 | 34·3 | 33·6 | 0·7 | 0·0 | 0·0 | 8 | | 10·0 | Cirro-stratous scud. |
| | 12 | 848 | 33·4 | 32·9 | 0·5 | 0·1 | 0·0 | 3 | | 10·0 | Id.; slight mist. |
| | 13 | 29·853 | 33·4 | 32·9 | 0·5 | 0·0 | 0·0 | 0 | | 10·0 | Cirro-stratous scud; slight mist. |
| | 14 | 844 | 33·3 | 32·9 | 0·4 | 0·0 | 0·0 | 2 | | 10·0 | Misty scud? id. ☽ |
| | 15 | 842 | 33·3 | 32·8 | 0·5 | 0·0 | 0·0 | 2 | | 10·0 | Id.; id. |
| | 16 | 848 | 33·3 | 32·9 | 0·4 | 0·0 | 0·0 | 12 | | 10·0 | Id.; id. |
| | 17 | 834 | 33·3 | 32·9 | 0·4 | 0·0 | 0·0 | 4 | 18 : — : — | 10·0 | Id.; id. ☽ |
| | 18 | 827 | 33·2 | 32·9 | 0·3 | 0·0 | 0·0 | 6 | | 10·0 | Id.; fog much denser. |
| | 19 | 828 | 33·2 | 32·9 | 0·3 | 0·0 | 0·0 | 4 | | 10·0 | Id.; dense fog. |
| | 20 | 839 | 33·3 | 33·0 | 0·3 | 0·0 | 0·0 | 4 | | 10·0 | Id.; id. |
| | 21 | 824 | 33·3 | 33·1 | 0·2 | 0·0 | 0·0 | 8 | | 10·0 | Fog; trees invisible at 150 yards distance. |
| | 22 | 850 | 34·3 | 34·2 | 0·1 | 0·0 | 0·0 | 8 | | 10·0 | Id.; id. |
| | 23 | 850 | 34·0 | 33·8 | 0·2 | 0·0 | 0·0 | 16 | | 10·0 | Fog clearing away. |
| 27 | 0 | 835 | 33·4 | 33·0 | 0·4 | 0·0 | 0·0 | 20 | 24 : — : — | 9·9 | Misty scud; cirro-cumuli; cirro-strati. |
| | 1 | 816 | 35·7 | 35·0 | 0·7 | 0·1 | 0·0 | 20 | 22 : — : — | 9·9 | Id.; id. |
| | 2 | 819 | 34·7 | 34·2 | 0·5 | 0·1 | 0·0 | 28 | | 10·0 | Nearly homogeneous; fog getting denser. ● |
| | 3 | 815 | 34·2 | 33·7 | 0·5 | 0·0 | 0·0 | 16 | | 10·0 | Cirro-stratous scud; cirrous haze; very foggy. |
| | 4 | 819 | 33·0 | 32·7 | 0·3 | 0·1 | 0·0 | 16 | | 10·0 | Fog, objects invisible at 200 yards. |
| | 5 | 821 | 31·7 | 31·5 | 0·2 | 0·0 | 0·0 | 16 | | 10·0 | Id., id. |
| | 6 | 825 | 31·2 | 30·9 | 0·3 | 0·0 | 0·0 | 17 | | 10·0 | Id., id.? |
| | 7 | 827 | 29·7 | 30·2 | ... | 0·1 | 0·0 | 23 | | 5·0? | Less fog; stars dim. |
| | 8 | 824 | 29·0 | 29·2 | ... | 0·0 | 0·0 | 22 | | 3·0? | Fog variable in density; stars brighter. |
| | 9 | 828 | 27·9 | 28·2 | ... | 0·0 | 0·0 | 22 | | 1·0? | Id.; lunar corona. ☄ |
| | 10 | 823 | 27·4 | 27·8 | ... | 0·0 | 0·0 | 22 | | 8·0? | Fog; cirro-cumuli; id. ☄ |
| | 11 | 817 | 27·3 | 27·8 | ... | 0·0 | 0·0 | 18 | | 9·8 | Id.; cirro-strati. ☄ |
| | 12 | 810 | 26·4 | 26·9 | ... | 0·0 | 0·0 | | | 7·0? | Id.; lunar corona. ☄ |
| | 13 | 29·801 | 26·2 | 26·4 | ... | 0·0 | 0·0 | 24 | | 8·0? | The same; fog rather denser. ☄ |
| | 14 | 783 | 27·3 | 27·4 | ... | 0·0 | 0·0 | 18 | | 10·0? | Id.; id. ☄ |
| | 15 | 776 | 28·0 | 28·0 | ... | 0·0 | 0·0 | 22 | | 10·0 | Id.; id. ☄ |
| | 16 | 755 | 27·7 | 27·8 | ... | 0·0 | 0·0 | 20 | | 10·0 | Id.; id. ☄ |
| | 17 | 756 | 27·6 | 27·7 | ... | 0·0 | 0·0 | 20 | | 10·0 | Id. ☄ |
| | 18 | 736 | 27·7 | 27·6 | ... | 0·0 | 0·0 | | | 10·0 | Fog; cirro-cumuli, or cirro-strati above. |
| | 19 | 727 | 28·1 | 27·9 | 0·2 | 0·0 | 0·0 | 16 | | 10·0 | Id.; id.; much hoar-frost. |
| | 20 | 730 | 27·8 | 27·8 | ... | 0·0 | 0·0 | | — : 16 : — | 6·0 | Cirro-cumuli; cirro-strati; fog nearly away. ☽ |
| | 21 | 730 | 26·6 | 26·4 | 0·2 | 0·0 | 0·0 | | — : 15 : — | 8·0 | Id.; id. |
| | 22 | 736 | 27·0 | 26·8 | 0·2 | 0·0 | 0·0 | | | 7·0 | Id.; id.; cirri; foggy. |
| | 23 | 732 | 28·0 | 27·8 | 0·2 | 0·0 | 0·0 | 20 | — : 23 : — | 9·0 | Cirro-cumulous scud; cirro-strati; cirri; foggy. |
| 28 | 0 | 727 | 29·7 | 29·5 | 0·2 | 0·1 | 0·0 | 20 | 20 : 24 : — | 10·0 | Fog or stratus; cirro-cumulo-strati; cirrous haze. ● |
| | 1 | 716 | 31·0 | 30·8 | 0·2 | 0·0 | 0·0 | | 8 : — : — | 10·0 | Id.; id.; cirrous mass. |
| | 2 | 695 | 32·0 | 31·7 | 0·3 | 0·1 | 0·0 | 4 | | 10·0 | Dense fog, objects invisible at 150 yards. |
| | 3 | 689 | 32·0 | 31·8 | 0·2 | 0·1 | 0·0 | 4 | | 10·0 | Id., id. id. |
| | 4 | 677 | 32·3 | 32·0 | 0·3 | 0·0 | 0·0 | 2 | | 10·0 | Id., id. 100 yards. |
| | 5 | 673 | 32·3 | 32·3 | 0·0 | 0·1 | 0·0 | 20 | | 10·0 | Id., id. id. |
| | 6 | 670 | 32·1 | 31·9 | 0·2 | 0·0 | 0·0 | 22 | | 10·0 | Fog less dense. |
| | 7 | 658 | 32·3 | 32·1 | 0·2 | 0·0 | 0·0 | 22 | | 10·0 | Dark. |
| | 8 | 653 | 33·0 | 32·6 | 0·4 | 0·0 | 0·0 | 18 | | 10·0 | Rain$^{0·2}$ |
| | 9 | 644 | 34·1 | 33·7 | 0·4 | 0·0 | 0·0 | 4 | | 10·0 | Rain$^{1}$ |
| | 10 | 639 | 33·9 | 33·5 | 0·4 | 0·0 | 0·0 | 18 | | 10·0 | Id. |
| | 11 | 627 | 34·0 | 33·7 | 0·3 | 0·0 | 0·0 | 18 | | 10·0 | Rain$^{0·2}$ |
| | 12 | 620 | 36·2 | 35·7 | 0·5 | 0·0 | 0·0 | 17 | | 10·0 | Cirro-stratous scud. |
| | 23 | 29·668 | 39·6 | 39·2 | 0·4 | 0·3 | 0·1 | 22 | 22 : — : 26 | 3·0 | Loose misty scud; cirri. |
| 29 | 13 | 29·738 | 32·7 | 32·6 | 0·1 | 0·2 | 0·0 | 18 | | 4·0 | Cirro-strati; cirrous haze. ☽ |
| | 14 | 740 | 33·0 | 32·8 | 0·2 | 0·0 | 0·0 | 18 | | 3·0 | Id.; id. ☽ |
| | 15 | 763 | 31·6 | 31·4 | 0·2 | 0·0 | 0·0 | 17 | — : 30 : — | 5·5 | Cirro-cumuli; cirro-strati; haze. ☄ |
| | 16 | 762 | 34·4 | 33·9 | 0·5 | 0·0 | 0·0 | 18 | | 9·0 | Cirro-cumulous scud; cirro-strati. |

The direction of the wind is indicated by the number of the point of the compass, reckoning N. = 0, E. = 8, S. = 16, W. = 24. The motions of the three strata of clouds, Sc. (scud), C.-s. (cirro-stratus), and Cir. (cirrus), are indicated in a similar manner.

| Gött. Mean Time. | Barometer at 32°. | Thermometers. Dry. | Wet. | Diff. | Wind. Maximum force in 1h. | 10m. | From | Clouds, Sc. : C.-s. : Ci., moving from | Sky clouded. | Species of Clouds and Meteorological Remarks. |
|---|---|---|---|---|---|---|---|---|---|---|
| d. h. | in. | ° | ° | ° | lbs. | lbs. | pt. | pt. pt. pt. | 0—10. | |
| 29 17 | 29·765 | 34·7 | 33·9 | 0·8 | 0·1 | 0·0 | 18 | | 9·9 | Cirro-cumulous scud ; cirro-strati. |
| 18 | 765 | 34·7 | 34·0 | 0·7 | 0·0 | 0·0 | 17 | | 10·0 | Id. |
| 19 | 778 | 34·7 | 34·1 | 0·6 | 0·1 | 0·0 | 18 | | 10·0 | Scud and cirrous clouds ? |
| 20 | 792 | 34·8 | 34·2 | 0·6 | 0·0 | 0·0 | 18 | | 10·0 | Id. |
| 21 | 807 | 35·3 | 34·7 | 0·6 | 0·0 | 0·0 | 18 | —: 0 : — | 10·0 | Thick cirro-cumulous scud. |
| 22 | 820 | 34·8 | 34·3 | 0·5 | 0·0 | 0·0 | 18 | —: 0 : — | 10·0 | Id. |
| 23 | 822 | 35·7 | 35·1 | 0·6 | 0·0 | 0·0 | 6 | —: 2 : 28 | 5·0 | Cirro-cumulous scud ; cirri. ⊙ |
| 30 0 | 823 | 37·4 | 36·7 | 0·7 | 0·0 | 0·0 | 24 | —: 1 : — | 8·0 | Id. ; id. |
| 1 | 822 | 38·7 | 37·7 | 1·0 | 0·0 | 0·0 | | | 9·5 | Id. ; id. |
| 2 | 826 | 40·1 | 39·1 | 1·0 | 0·1 | 0·0 | 18 | | 9·5 | Cirro-stratous scud ; cirro-cumulous scud. |
| 3 | 835 | 39·4 | 38·6 | 0·8 | 0·0 | 0·0 | 17 | —: 0 : — | 9·8 | Id. ; id. |
| 4 | 837 | 39·4 | 38·5 | 0·9 | 0·0 | 0·0 | 17 | —: 0 : — | 9·9 | Id. |
| 5 | 841 | 37·7 | 37·2 | 0·5 | 0·0 | 0·0 | 17 | —: 1 : — | 10·0 | Id. |
| 6 | 853 | 36·7 | 36·2 | 0·5 | 0·1 | 0·0 | 17 | | 8·0 | Id. ; stars dim ; drops of rain. |
| 7 | 863 | 36·7 | 36·2 | 0·5 | 0·1 | 0·0 | 17 | | 5·0 | Id. ; id. ; |
| 8 | 869 | 36·5 | 36·1 | 0·4 | 0·0 | 0·0 | | | 10·0 | Id. ; dark. |
| 9 | 881 | 36·2 | 35·8 | 0·4 | 0·1 | 0·0 | 15 | | 9·0 | Id. ; id. ; stars dim. |
| 10 | 878 | 35·5 | 35·0 | 0·5 | 0·0 | 0·0 | 16 | | 10·0 | Id. |
| 11 | 868 | 35·5 | 35·2 | 0·3 | 0·0 | 0·0 | 16 | | 10·0 | Id. |
| 12 | 867 | 35·7 | 35·4 | 0·3 | 0·0 | 0·0 | 20 | | 10·0 | Id. |
| 13 | 29·859 | 35·4 | 35·1 | 0·3 | 0·0 | 0·0 | 16 | | 9·9 | Cirro-stratous scud. |
| 14 | 862 | 36·3 | 36·0 | 0·3 | 0·0 | 0·0 | 20 | | 10·0 | Id. |
| 15 | 866 | 35·9 | 35·6 | 0·3 | 0·0 | 0·0 | 16 | | 9·8 | Id. |
| 16 | 872 | 35·6 | 35·1 | 0·5 | 0·0 | 0·0 | 20 | | 10·0 | Cirro-cumulous scud. |
| 17 | 873 | 35·1 | 34·8 | 0·3 | 0·0 | 0·0 | 4 | | 10·0 | Id. |
| 18 | 871 | 35·6 | 35·2 | 0·4 | 0·0 | 0·0 | 20 | | 10·0 | Id. |
| 19 | 875 | 35·7 | 35·1 | 0·6 | 0·0 | 0·0 | 19 | | 10·0 | Id. |
| 20 | 885 | 35·4 | 35·0 | 0·4 | 0·0 | 0·0 | 19 | | 10·0 | Id. |
| 21 | 895 | 35·5 | 35·0 | 0·5 | 0·1 | 0·0 | 21 | —: 0 : — | 10·0 | Id. ; cirrous clouds above. |
| 22 | 910 | 35·4 | 34·9 | 0·5 | 0·0 | 0·0 | 22 | —: 0 : — | 9·9 | Id. ; cirro-strati. |
| 23 | 916 | 36·8 | 36·2 | 0·6 | 0·1 | 0·0 | 18 | —: 0 : — | 9·8 | Id. ; id. |
| 31 0 | 913 | 37·9 | 37·2 | 0·7 | 0·0 | 0·0 | 21 | —: 29 : — | 6·0 | Cirro-cumulo-strati. ⊖ |
| 1 | 908 | 39·7 | 38·7 | 1·0 | 0·1 | 0·0 | 22 | | 0·5 | Id. ; cirro-strati. ⊙ |
| 2 | 910 | 41·6 | 39·8 | 1·8 | 0·1 | 0·0 | 21 | | 0·2 | Id. ⊙ |
| 3 | 918 | 41·2 | 38·6 | 2·6 | 0·1 | 0·1 | 21 | | 0·5 | Cir.-str. ; cirri on hor. ; patch of scud on Cheviot. ⊙ |
| 4 | 933 | 37·8 | 37·0 | 0·8 | 0·1 | 0·1 | 20 | | 0·5 | Cirro-cumuli ; cirro-strati ; cirri. ⊖ |
| 5 | 934 | 35·2 | 34·6 | 0·6 | 0·1 | 0·1 | 18 | | 0·2 | Cirro-strati ; cirri ; haze on horizon. |
| 6 | 945 | 32·4 | 32·2 | 0·2 | 0·1 | 0·0 | 20 | | 0·1 | Faint streaks of cirri to NE. |
| 7 | 953 | 31·4 | 31·1 | 0·3 | 0·0 | 0·0 | 22 | | 0·2 | Thin cirri. |
| 8 | 960 | 31·3 | 31·1 | 0·2 | 0·0 | 0·0 | 20 | | 0·2 | Id. |
| 9 | 977 | 30·8 | ... | ... | 0·0 | 0·0 | 20 | | 0·2 | Cirro-strati on NE. horizon. |
| 10 | 29·995 | 29·4 | 29·7 | ... | 0·0 | 0·0 | 16 | | 0·3 ? | Slight fog. |
| 11 | 30·005 | 31·3 | 31·2 | 0·1 | 0·1 | 0·0 | 18 | | 9·8 | Cirro-cumulo-strati. |
| 12 | 29·999 | 31·0 | 30·9 | 0·1 | 0·1 | 0·0 | 17 | | 2·0 | Id. |
| 13 | 29·999 | 30·9 | 30·7 | 0·2 | 0·1 | 0·0 | 18 | | 2·5 | Cirro-cumulo-strati. |
| 14 | 30·004 | 31·2 | 31·0 | 0·2 | 0·0 | 0·0 | 20 | | 8·2 | Id. |
| 15 | 013 | 29·3 | 29·5 | ... | 0·0 | 0·0 | 20 | | 1·0 | Id. ; faint aurora to N. ? ☽ |
| 16 | 013 | 28·2 | 28·4 | ... | 0·0 | 0·0 | 20 | 20 : — : — | 1·0 | Misty scud ; cirro-cumulo-strati ; aurora to N. ☽ |
| 17 | 010 | 29·4 | 29·2 | 0·2 | 0·0 | 0·0 | 17 | —: 8 : — | 6·0 | Cirro-cumulo-strati ; fog just gone. ☽ |
| 18 | 009 | 28·8 | 28·8 | ... | 0·0 | 0·0 | 20 | —: 8 : — | 5·0 | Id. ; lunar corona. ☽ |
| 19 | 008 | 28·0 | 28·0 | ... | 0·0 | 0·0 | 24 | | 3·0 | Id. ; id. ☽ |
| 20 | 017 | 27·3 | 27·3 | ... | 0·0 | 0·0 | 22 | | 3·5 | Cirro-cumulous scud. ☽ |
| 21 | 038 | 26·8 | 26·7 | 0·1 | 0·0 | 0·0 | 22 | —: 4 : — | 6·0 | Id. ☽ |
| 22 | 050 | 28·2 | 28·0 | 0·2 | 0·0 | 0·0 | 24 | —: 7 : — | 7·0 | Id. |
| 23 | 052 | 29·2 | 28·7 | 0·5 | 0·0 | 0·0 | 22 | —: 6 : — | 7·0 | Id. |

The direction of the wind is indicated by the number of the point of the compass, reckoning N. = 0, E. = 8, S. = 16, W. = 24. The motions of the three strata of clouds, Sc. (scud), C.-s. (cirro-stratus), and Cir. (cirrus), are indicated in a similar manner.

# DAILY

AND

# EXTRA METEOROLOGICAL OBSERVATIONS.

## MAKERSTOUN OBSERVATORY,

## 1843 AND 1844.

| Civil Day. | Thermometers. Min. | Thermometers. Max. | Rain in Gauge at Noon. | Thermometers. Min. | Thermometers. Max. | Rain in Gauge at Noon. | Thermometers. Min. | Thermometers. Max. | Rain in Gauge at Noon. | Thermometers. Min. | Thermometers. Max. | Rain in Gauge at Noon. |
|---|---|---|---|---|---|---|---|---|---|---|---|---|
| | ° | ° | in. | ° | ° | in. | ° | ° | in. | ° | ° | in. |
| | JANUARY. | | | MARCH. | | | MAY. | | | JULY. | | |
| 1 | 26·6 | 33·8 | 0·238 | 34·5 | 42·6 | 0·013 | 32·6 | 70·5 | 0·000 | 40·9 | 61·8 | 0·000 |
| 2 | 24·2 | 31·8 | ·000 | 33·4 | 42·7 | ·143 | 37·2 | 69·3 | ·000 | 45·3 | 65·9 | ·015 |
| 3 | 13·2 | 40·3 | ·112 | 33·5 | 43·8 | ..... | 34·1 | 70·7 | ·000 | 45·7 | 62·6 | ·000 |
| 4 | 31·7 | 36·9 | ·351 | 31·3 | 37·4 | ·060 | 43·1 | 50·1 | ·010 | 42·0 | 58·5 | ·000 |
| 5 | 34·0 | 50·2 | ·365 | 24·4 | 38·6 | ·000 | 41·9 | 58·6 | ..... | 42·6 | 62·6 | ·000 |
| 6 | 39·9 | 46·8 | ·091 | 27·4 | 37·1 | ·000 | 44·3 | 70·7 | ·003 | 48·0 | 61·3 | ·012 |
| 7 | 35·5 | 44·3 | ·055 | 31·3 | 38·8 | ·000 | 43·4 | 65·2 | ·052 | 44·2 | 64·9 | ..... |
| 8 | 31·8 | 40·7 | ·030 | 25·6 | 36·9 | ·093 | 33·0 | 63·8 | ·000 | 39·6 | 69·4 | ·004 |
| 9 | 33·4 | 34·8 | ·002 | 39·0 | 48·7 | ·120 | 31·5 | 66·4 | ·000 | 45·6 | 61·9 | ·012 |
| 10 | 31·7 | 42·7 | ·535 | 34·9 | 45·2 | ..... | 40·6 | 51·4 | ·336 | 46·2 | 65·7 | ·045 |
| 11 | 37·1 | 45·0 | ·010 | 38·3 | 47·0 | ·037 | 45·6 | 54·0 | ·023 | 50·6 | 63·6 | ·027 |
| 12 | 35·7 | 45·7 | ·000 | 31·5 | 40·9 | ·070 | 44·4 | 65·7 | ..... | 49·0 | 62·9 | ·000 |
| 13 | 27·2 | 40·5 | ·000 | 26·5 | 40·9 | ·000 | 40·4 | 71·3 | ·000 | 42·6 | 60·3 | ·047 |
| 14 | 32·3 | 39·0 | ..... | 26·4 | 46·1 | ·000 | 46·4 | 58·3 | ·002 | 49·0 | 56·0 | ·517 |
| 15 | 20·3 | 36·9 | ·020 | 32·4 | 34·5 | ·340 | 42·6 | 57·3 | ·000 | 38·5 | 63·0 | ·086 |
| 16 | 27·4 | 35·7 | ·013 | 31·5 | 36·9 | ·420 | 33·6 | 61·3 | ·000 | 42·3 | 66·7 | ·144 |
| 17 | 27·2 | 43·9 | ·052 | 30·4 | 37·7 | ..... | 37·8 | 47·4 | ·002 | 38·3 | 65·3 | ·000 |
| 18 | 29·5 | 48·4 | ·002 | 18·2 | 45·6 | ·000 | 29·6 | 48·2 | ·010 | 48·0 | 65·4 | ·205 |
| 19 | 39·7 | 43·0 | ·000 | 32·4 | 47·7 | ·000 | 34·9 | 50·9 | ..... | 46·2 | 62·3 | ·064 |
| 20 | 30·5 | 39·5 | ·000 | 34·7 | 39·7 | ·047 | 36·9 | 51·9 | ·002 | 43·7 | 65·2 | ·000 |
| 21 | 33·5 | 47·4 | ..... | 24·4 | 45·0 | ·000 | 41·6 | 56·2 | ·094 | 44·1 | 62·1 | ..... |
| 22 | 29·3 | 46·1 | ·003 | 35·3 | 51·0 | ·000 | 35·8 | 56·4 | ·000 | 55·0 | 72·4 | ·300 |
| 23 | 34·6 | 43·2 | ·000 | 36·5 | 47·2 | ·087 | 31·1 | 55·3 | ·000 | 45·6 | 81·8 | ·000 |
| 24 | 26·2 | 42·9 | ·010 | 34·4 | 46·0 | ..... | 43·0 | 57·9 | ·000 | 56·7 | 69·4 | ·282 |
| 25 | 32·8 | 48·1 | ·000 | 34·6 | 47·1 | ·052 | 43·6 | 57·1 | ·002 | 54·2 | 74·4 | ·005 |
| 26 | 34·5 | 46·4 | ·045 | 35·5 | 55·9 | ·104 | 40·8 | 54·4 | ..... | 53·6 | 69·4 | ·188 |
| 27 | 39·2 | 50·1 | ·000 | 45·5 | 59·7 | ·047 | 35·7 | 52·8 | ·000 | 52·5 | 74·2 | ·005 |
| 28 | 43·0 | 44·8 | ..... | 30·5 | 53·4 | ·008 | 36·7 | 53·5 | ·000 | 54·9 | 73·2 | ..... |
| 29 | 32·7 | 51·7 | ·116 | 37.9 | 56·3 | ·000 | 42·6 | 53·2 | ·000 | 48·8 | 65·0 | ·075 |
| 30 | 35·2 | 42·7 | ·092 | 29·5 | 61·2 | ·000 | 42·1 | 55·2 | ·010 | 44·0 | 58·4 | ·020 |
| 31 | 29·7 | 35·1 | ·000 | 30·5 | 57·4 | ..... | 43·3 | 55·6 | ·000 | 50·5 | 62·2 | ·395 |
| | FEBRUARY. | | | APRIL. | | | JUNE. | | | AUGUST. | | |
| 1 | 24·4 | 37·5 | 0·000 | 30·7 | 57·6 | 0·004 | 42·5 | 58·3 | 0·000 | 49·8 | 61·4 | 0·105 |
| 2 | 25·1 | 36·9 | ·230 | 30·4 | 54·7 | ..... | 44·8 | 54·2 | ..... | 49·7 | 66·4 | ·000 |
| 3 | 28·7 | 36·7 | ·060 | 41·7 | 52·0 | ·187 | 41·0 | 65·7 | ·000 | 38·4 | 62·2 | ·047 |
| 4 | 22·2 | 39·1 | ..... | 35·5 | 47·6 | ·070 | 38·9 | 67·4 | ·000 | 42·7 | 68·7 | ..... |
| 5 | 20·3 | 35·9 | ·198 | 33·6 | 52·1 | ·004 | 47·4 | 63·4 | ·120 | 46·1 | 71·2 | ·116 |
| 6 | 14·2 | 34·9 | ·000 | 26·4 | 50·0 | ·094 | 51·4 | 71·5 | ·012 | 51·9 | 68·9 | ·037 |
| 7 | 22·2 | 38·8 | ·030 | 38·3 | 59·8 | ..... | 52·8 | 67·8 | ·001 | 50·8 | 61·3 | ·245 |
| 8 | 26·4 | 38·4 | ·064 | 39·2 | 56·2 | ·002 | 53·8 | 67·6 | ·122 | 49·9 | 62·2 | ·015 |
| 9 | 32·5 | 38·8 | ·169 | 45·4 | 60·3 | ·000 | 44·6 | 67·6 | ..... | 50·4 | 62·5 | ·003 |
| 10 | 27·9 | 37·9 | ·085 | 40·3 | 58·1 | ·000 | 47·3 | 64·3 | ·017 | 40·3 | 64·3 | ·000 |
| 11 | 30·5 | 36·2 | ..... | 35·4 | 54·4 | ·000 | 40·7 | 68·2 | ·014 | 42·9 | 66·4 | ..... |
| 12 | 19·3 | 38·9 | ·105 | 37·1 | 51·0 | ·000 | 49·7 | 67·8 | ·042 | 50·9 | 63·8 | ·071 |
| 13 | 26·6 | 38·8 | ·012 | 40·9 | 57·0 | ·006 | 52·6 | 69·7 | ·087 | 46·7 | 67·0 | ·000 |
| 14 | 35·9 | 44·9 | ·015 | 39·3 | 59·1 | ..... | 50·2 | 61·4 | ·010 | 45·8 | 67·9 | ·292 |
| 15 | 42·4 | 48·2 | ·000 | 47·4 | 56·2 | ·055 | 47·4 | 60·2 | ·010 | 50·1 | 62·2 | ·293 |
| 16 | 33·8 | 45·0 | ·010 | 31·4 | 54·7 | ·000 | 42·9 | 65·5 | ..... | 47·5 | 69·0 | ·012 |
| 17 | 39·5 | 45·0 | ·000 | 41·0 | 57·2 | ·000 | 36·2 | 64·4 | ·002 | 48·9 | 59·0 | ·115 |
| 18 | 38·1 | 46·0 | ..... | 41·5 | 54·2 | ·000 | 47·1 | 57·7 | ·766 | 45·0 | 63·5 | ..... |
| 19 | 34·9 | 36·1 | ·525 | 43·5 | 60·4 | ·058 | 44·6 | 59·3 | ·448 | 43·8 | 61·7 | ·000 |
| 20 | 26·3 | 34·2 | ·018 | 48·9 | 62·3 | ·086 | 38·8 | 62·3 | ·166 | 53·6 | 62·6 | ·103 |
| 21 | 21·0 | 32·7 | ·034 | 42·2 | 56·3 | ·071 | 49·8 | 67·4 | ·460 | 46·9 | 62·2 | ·000 |
| 22 | 11·5 | 32·4 | ·018 | 41·6 | 55·3 | ·037 | 49·3 | 66·5 | ·006 | 48·9 | 56·7 | ·092 |
| 23 | 20·3 | 35·7 | ·000 | 38·6 | 55·2 | ·004 | 48·2 | 75·4 | ..... | 48·7 | 67·2 | ·039 |
| 24 | 30·0 | 35·5 | ·222 | 41·7 | 53·3 | ·002 | 51·8 | 71·8 | ·000 | 43·2 | 67·3 | ·031 |
| 25 | 26·6 | 36·4 | ..... | 38·3 | 60·4 | ·005 | 46·6 | 52·1 | ·714 | 39·6 | 62·8 | ..... |
| 26 | 22·4 | 34·3 | ·048 | 40·2 | 58·1 | ·000 | 43·5 | 54·3 | ·069 | 46·9 | 63·2 | ·000 |
| 27 | 12·5 | 38·9 | ·138 | 35·7 | 54·2 | ·000 | 45·5 | 59·3 | ·009 | 36·2 | 62·6 | ·000 |
| 28 | 30·6 | 42·7 | ·087 | 30·5 | 61·3 | ..... | 46·2 | 66·4 | ·008 | 40·0 | 68·9 | ·000 |
| 29 | 33·7 | 41·9 | ·000 | 31·5 | 66·9 | ·000 | 49·0 | 64·2 | ·000 | 38·3 | 72·9 | ·000 |
| 30 | | | | 27·7 | 63·4 | ·000 | 38·8 | 67·0 | ..... | 40·0 | 75·5 | ·000 |
| 31 | | | | | | | | | | 48·9 | 74·6 | ·000 |

| Civil Day. | Thermometers. Min. | Thermometers. Max. | Rain in Gauge at Noon. | Thermometers. Min. | Thermometers. Max. | Rain in Gauge at Noon. | Thermometers. Min. | Thermometers. Max. | Rain in Gauge at Noon. | Thermometers. Min. | Thermometers. Max. | Rain in Gauge at Noon. |
|---|---|---|---|---|---|---|---|---|---|---|---|---|
| | ° | ° | in. | ° | ° | in. | ° | ° | in. | ° | ° | in. |
| | SEPTEMBER. | | | OCTOBER. | | | NOVEMBER. | | | DECEMBER. | | |
| 1 | 45·2 | 73·5 | ..... | 50·7 | 56·4 | 0·040 | 45·0 | 47·2 | 0·000 | 35·4 | 41·9 | ..... |
| 2 | 43·6 | 76·3 | 0·000 | 47·9 | 59·4 | ·052 | 40·8 | 45·1 | ·010 | 33·9 | 38·8 | 0·088 |
| 3 | 43·1 | 67·5 | ·003 | 50·5 | 62·1 | ·002 | 43·1 | 45·6 | ..... | 35·2 | 38·9 | ·004 |
| 4 | 51·6 | 66·4 | ·000 | 46·0 | 56·2 | ·000 | 39·9 | 44·7 | ·070 | 26·9 | 38·7 | ·004 |
| 5 | 54·1 | 66·9 | ·000 | 42·5 | 52·5 | ·513 | 38·0 | 43·4 | ·420 | 21·6 | 30·5 | ·000 |
| 6 | 55·1 | 62·6 | ·015 | 34·9 | 54·3 | ·002 | 39·3 | 44·4 | ·549 | 17·9 | 28·0 | ·000 |
| 7 | 54·5 | 68·7 | ·024 | 35·7 | 50·1 | ·002 | 38·7 | 45·3 | ·696 | 15·7 | 31·8 | ·000 |
| 8 | 50·7 | 56·3 | ·576 | 28·7 | 53·1 | ·000 | 33·0 | 48·2 | ·038 | 21·8 | 32·9 | ..... |
| 9 | 49·9 | 60·2 | ·004 | 45·6 | 54·5 | ·000 | 43·1 | 49·7 | ·130 | 25·3 | 32·9 | ·020 |
| 10 | 44·0 | 60·9 | ·000 | 48·9 | 61·9 | ·019 | 39·9 | 46·5 | ..... | 29·1 | 35·0 | ·000 |
| 11 | 40·0 | 63·3 | ·000 | 42·7 | 57·8 | ·003 | 34·9 | 41·0 | ·000 | 30·2 | 31·8 | ·000 |
| 12 | 45·4 | 60·5 | ·009 | 37·0 | 58·3 | ·004 | 32·7 | 43·9 | ·025 | 28·8 | 32·8 | ·005 |
| 13 | 40·9 | 62·5 | ·000 | 52·3 | 61·1 | ..... | 36·0 | 43·3 | ·142 | 25·1 | 33·8 | ·028 |
| 14 | 48·1 | 55·0 | ·818 | 45·9 | 55·2 | ·050 | 37·2 | 45·3 | ·062 | 25·6 | 35·7 | ·008 |
| 15 | 57·9 | 62·3 | ·939 | 39·9 | 54·2 | ·310 | 33·9 | 53·3 | ·444 | 32·6 | ..... | ..... |
| 16 | 53·1 | 65·2 | ·092 | 44·0 | 55·8 | ·074 | 48·9 | 54·0 | ·005 | 31·9 | 37·6 | ·038 |
| 17 | 46·9 | 52·1 | ·044 | 45·0 | 51·8 | ·020 | 46·7 | 54·2 | ..... | 35·0 | 41·8 | ·088 |
| 18 | 39·2 | 53·3 | ·227 | 44·7 | 50·0 | ·005 | 43·7 | 51·3 | ·000 | 35·7 | 39·8 | ·004 |
| 19 | 45·1 | 56·4 | ·000 | 28·2 | 49·4 | ·014 | 49·3 | 53·2 | ·005 | 32·6 | 37·7 | ·000 |
| 20 | 43·3 | 55·2 | ·100 | 32·8 | 47·4 | ·173 | 45·8 | 51·2 | ·115 | 20·4 | 28·7 | ·000 |
| 21 | 32·8 | 55·6 | ·016 | 26·5 | 49·1 | ·098 | 33·8 | 48·7 | ·000 | 20·3 | 32·1 | ·000 |
| 22 | 29·7 | 54·1 | ..... | 32·2 | 48·7 | ·003 | 24·9 | 42·2 | ·000 | 30·1 | 36·8 | ..... |
| 23 | 32·2 | 51·3 | ·002 | 23·9 | 51·6 | ·002 | 32·5 | 43·3 | ·000 | 33·4 | 36·8 | ·000 |
| 24 | 46·9 | 58·7 | ·003 | 25·6 | 48·7 | ·000 | 29·4 | 41·0 | ..... | 33·0 | 33·2 | ·000 |
| 25 | 33·0 | 58·7 | ·000 | 34·0 | 49·9 | ·047 | 23·6 | 35·9 | ·009 | 30·4 | 32·0 | ·021 |
| 26 | 51·2 | 61·5 | ·002 | 43·2 | 50·4 | ·115 | 27·2 | 42·7 | ·006 | 29·8 | 34·4 | ·000 |
| 27 | 50·1 | 64·6 | ·000 | 42·0 | 47·9 | ..... | 37·4 | 49·2 | ·011 | 32·3 | 35·9 | ·000 |
| 28 | 54·5 | 59·3 | ·010 | 30·0 | 48·1 | ·002 | 43·3 | 47·6 | ·000 | 25·1 | 31·8 | ·000 |
| 29 | 35·4 | 55·6 | ·180 | 36·0 | 49·3 | ·018 | 40·9 | 44·6 | ·043 | 31·5 | 43·0 | ·055 |
| 30 | 33·3 | 56·6 | ·000 | 46·6 | 49·3 | ·004 | 32·8 | 42·6 | ·000 | 29·8 | 39·7 | ·000 |
| 31 | | | | 45·9 | 50·1 | ·009 | | | | 33·8 | 40·8 | ·000 |

TEMPERATURE OF WATER IN PUMP WELLS.

| Göttingen Mean Time of Observations. | | | Temperature of Water. Pump Wells. Cottage. | Temperature of Water. Pump Wells. Garden. | Göttingen Mean Time of Observations. | | | Temperature of Water. Pump Wells. Cottage. | Temperature of Water. Pump Wells. Garden. | Göttingen Mean Time of Observations. | | | Temperature of Water. Pump Wells. Cottage. | Temperature of Water. Pump Wells. Garden. |
|---|---|---|---|---|---|---|---|---|---|---|---|---|---|---|
| | d. | h. | ° | ° | | d. | h. | ° | ° | | d. | h. | ° | ° |
| Jan. | 6 | 5 | 45·9 | 47·8 | May | 4 | 5 | 44·6 | 46·8 | Sept. | 2 | 5 | 50·2 | 49·8 |
| | 13 | 4 | 45·7 | 47·6 | | 11 | 5 | 45·0 | 47·4 | | 7 | 5 | 50·2 | 50·0 |
| | 20 | 5 | 44·9 | 47·3 | | 18 | 5 | 45·6 | 47·6 | | 14 | 5 | 50·4 | 50·0 |
| | 27 | 6 | 44·7 | 47·5 | | 25 | 5 | 45·8 | 47·7 | | 16 | 5 | 51·1 | 50·1 |
| Feb. | 3 | 5 | 44·4 | ... | June | 1 | 5 | 46·3 | 47·9 | | 21 | 5 | 50·7 | 50·2 |
| | 10 | 5 | 43·7 | 46·5 | | 8 | 9 | 46·6 | 48·2 | | 30 | 5 | 50·7 | 50·3 |
| | 17 | 6 | 43·6 | 46·2 | | 15 | 5 | 47·4 | 48·3 | Oct. | 5 | 5 | 50·7 | 50·4 |
| | 26 | 5 | 43·1 | ... | | 22 | 5 | 47·5 | 48·6 | | 12 | 5 | 50·5 | 50·5 |
| March | 2 | 5 | 42·6 | 44·8 | | 29 | 6 | 47·8 | 48·7 | | 19 | 6 | 50·3 | ... |
| | 9 | 5 | 42·6 | 44·4 | July | 6 | 5 | 48·3 | 48·7 | | 26 | 6 | 49·6 | ... |
| | 16 | 5 | 42·6 | 43·7 | | 13 | 5 | 48·4 | 48·7 | Nov. | 2 | 5 | 49·2 | ... |
| | 23 | 5 | 42·6 | 43·7 | | 20 | 5 | 48·7 | 48·8 | | 9 | 5 | 48·7 | ... |
| April | 2 | 5 | 42·7 | 44·3 | | 27 | 5 | 49·1 | 49·1 | | 23 | 5 | 48·1 | 49·8 |
| | 6 | 6 | 42·8 | 44·5 | Aug. | 3 | 5 | 49·5 | 49·3 | Dec. | 2 | 7 | 47·6 | 49·6 |
| | 13 | 5 | 43·4 | 45·3 | | 10 | 5 | 49·7 | 49·4 | | 14 | 5 | 45·9 | 48·4 |
| | 20 | 6 | 43·8 | 45·9 | | 17 | 5 | 49·7 | 49·6 | | 21 | 5 | 45·5 | 48·3 |
| | 27 | 5 | 44·2 | 46·5 | | 24 | 5 | 50·1 | 49·7 | | 28 | 5 | 44·8 | 48·0 |

| | Maximum of Solar Radiation. | | | | | | | | | Minimum of Terrestrial Radiation. | | | |
|---|---|---|---|---|---|---|---|---|---|---|---|---|---|
| Civil. Day. | April. | May. | June. | July. | Aug. | Sept. | Oct. | Nov. | Dec. | Sept. | Oct. | Nov. | Dec. |
| | ° | ° | ° | ° | ° | ° | ° | ° | ° | ° | ° | ° | ° |
| 1 | 92·1 | 106·7 | 102·5 | 97·0 | ... | 103·7 | 71·9 | 49·5 | 43·3 | ... | 45·5 | 43·4 | 30·4 |
| 2 | 77·2 | 101·6 | 69·3 | 95·2 | ... | 117·4 | 74·1 | 46·0 | 40·0 | ... | 45·0 | 38·9 | 29·8 |
| 3 | 69·0 | 108·7 | 109·8 | 101·4 | ... | 103·0 | 79·3 | 47·2 | 41·0 | ... | 43·4 | 40·4 | 33·6 |
| 4 | 55·3 | 56·3 | 103·0 | 90·0 | ... | 96·5 | 72·0 | 47·5 | 45·4 | ... | 40·5 | 37·0 | 23·3 |
| 5 | 59·9 | 94·2 | 73·2 | 80·5 | ... | 102·9 | 61·5 | 44·2 | 42·9 | ... | 42·1 | ... | 10·7 |
| 6 | 79·9 | 102·9 | ... | 88·5 | ... | 70·0 | 70·0 | 44·0 | 43·5 | ... | 28·9 | 36·6 | 11·2 |
| 7 | 91·0 | 106·9 | 80·0 | 110·5 | ... | 96·2 | 79·6 | 50·0 | 43·3 | ... | 30·5 | 34·9 | 7·9 |
| 8 | 81·5 | 108·0 | 104·5 | 103·5 | ... | ... | 61·0 | 49·1 | 32·5 | 49·8 | 24·2 | 30·0 | 11·8 |
| 9 | 88·0 | 110·0 | 107·0 | 74·5 | ... | 89·2 | 52·0 | 56·0 | 34·5 | 47·0 | 44·2 | 40·9 | 20·5 |
| 10 | 92·2 | 54·6 | 105·6 | 97·0 | ... | 91·0 | 73·0 | 50·4 | 34·8 | 35·9 | 45·0 | 36·2 | 26·8 |
| 11 | 83·0 | 63·0 | 124·0 | 91·8 | ... | 90·1 | 78·5 | 43·2 | 31·8 | 33·4 | 36·9 | ... | 28·3 |
| 12 | 71·0 | 99·0 | 113·0 | 93·3 | ... | ... | 63·0 | 48·7 | 33·4 | 40·2 | 34·3 | 28·7 | 26·4 |
| 13 | 86·4 | 107·3 | 103·3 | 67·8 | ... | 85·0 | 77·3 | ... | 39·8 | 35·4 | 48·2 | 34·2 | 18·7 |
| 14 | 88·5 | 86·9 | 97·3 | 82·0 | ... | 56·0 | 62·5 | 53·7 | 35·0 | 47·2 | 40·1 | 33·3 | 24·0 |
| 15 | 74·7 | 102·7 | 86·3 | 88·2 | ... | 65·3 | 67·4 | 54·4 | 38·8 | 52·9 | 36·2 | 29·9 | 31·2 |
| 16 | 84·5 | 113·7 | 118·7 | 105·0 | ... | 92·0 | 73·0 | 57·1 | 38·5 | 49·3 | 39·5 | 44·7 | 30·3 |
| 17 | 86·4 | 86·3 | 95·8 | 94·5 | ... | 54·4 | 55·5 | 57·8 | 45·7 | 42·5 | 39·0 | 42·9 | 33·7 |
| 18 | 85·9 | 80·5 | 68·0 | 107·5 | ... | 71·1 | 65·9 | 52·5 | 40·1 | 36·7 | ... | 38·4 | 34·5 |
| 19 | 91·4 | 79·2 | 95·0 | 100·0 | ... | 79·1 | ... | 68·5 | 49·2 | 42·0 | 23·5 | 45·6 | 27·5 |
| 20 | 92·0 | 96·0 | 106·6 | 109·9 | ... | 77·6 | ... | 69·0 | 50·5 | 37·7 | 29·2 | 37·7 | 15·2 |
| 21 | ... | 71·0 | 96·1 | 64·1 | 83·2 | 79·2 | 59·4 | 75·7 | 38·2 | 29·5 | 23·4 | 26·3 | 14·3 |
| 22 | 82·2 | 96·0 | 108·5 | 105·3 | ... | 89·0 | 59·8 | 43·5 | 37·0 | 26·0 | 30·2 | 22·2 | 24·4 |
| 23 | 77·7 | 94·5 | 120·5 | 115·5 | ... | 57·5 | 58·1 | 43·5 | 38·2 | 28·7 | 21·1 | ... | 28·9 |
| 24 | 83·5 | 102·0 | 97·9 | 79·0 | 110·4 | 94·3 | 58·1 | 43·7 | 33·2 | 44·0 | 22·0 | 25·2 | 30·4 |
| 25 | 88·5 | 100·2 | 61·7 | 92·0 | 107·0 | 80·4 | 55·7 | 60·7 | 32·0 | 29·2 | 29·8 | 18·7 | 28·2 |
| 26 | 88·4 | 90·0 | 76·7 | 96·8 | 106·4 | 78·3 | 53·4 | 57·6 | 35·7 | 47·2 | 40·1 | 24·0 | 28·1 |
| 27 | 73·0 | 91·5 | 89·5 | 112·1 | 98·6 | 91·0 | 53·2 | 49·5 | 40·8 | 45·0 | 36·6 | 32·9 | 30·4 |
| 28 | 100·6 | 73·0 | 98·8 | 98·1 | 110·0 | 63·8 | 53·4 | ... | 33·8 | 50·1 | 27·5 | 41·7 | 20·3 |
| 29 | 107·0 | 78·0 | 98·2 | 98·1 | 116·6 | 85·0 | 51·0 | 48·8 | 55·5 | 32·0 | 31·8 | 39·2 | 30·6 |
| 30 | 101·0 | 74·0 | 106·2 | 62·2 | 109·5 | 77·5 | 49·7 | 43·3 | 50·3 | 29·7 | 43·5 | 24·3 | 27·0 |
| 31 | | 78·5 | | 81·3 | 107·0 | | 51·7 | | 60·4 | | 43·5 | | 32·5 |

## ACTINOMETER.

### AUGUST 18, 1843.

| Makerstoun Mean Time of First Reading. | In Sun or Shade. | Observation. Begun. | Observation. Ended. | Change in 60s. | Effect of Sun. | Mean of Group. | Sun's Altitude. |
|---|---|---|---|---|---|---|---|
| d. h. m. s. | | Sc. div. | Sc. div. | Sc. div. | Sc. div. | Sc. div. | ° |
| 18 22 25 0 | Sun | 23·5 | 31·0 | +7·5 | | | |
| 26 0 | Shade | 31·0 | 33·0 | +2·0 | 5·7 | | |
| 27 0 | Sun | 33·0 | 41·0 | +8·0 | 6·1 | | |
| 28 0 | Shade | 41·0 | 42·8 | +1·8 | 6·1 | | |
| 29 0 | Sun | 42·8 | 50·6 | +7·8 | 6·2 | 6·40 | 44·5 |
| 30 0 | Shade | 50·6 | 52·0 | +1·4 | 6·7 | | |
| 31 0 | Sun | 52·0 | 60·5 | +8·5 | 7·2 | | |
| 32 0 | Shade | 60·5 | 61·8 | +1·3 | 6·8 | | |
| 33 0 | Sun | 61·8 | 69·4 | +7·6 | 6·2 | | |
| 34 0 | Shade | 69·4 | 70·9 | +1·5 | 6·3 | | |
| 35 0 | Sun | 70·9 | 79·0 | +8·1 | 6·8 | | |
| 36 0 | Shade | 79·0 | 80·2 | +1·2 | 6·8 | 6·70 | 45·0 |
| 37 0 | Sun | 80·2 | 88·2 | +8·0 | 7·0 | | |
| 38 0 | Shade | 88·2 | 89·1 | +0·9 | 7·0 | | |
| 39 0 | Sun | 89·1 | 97·0 | +7·9 | | | |
| 18 23 0 0 | Sun | 7·0 | 13·4 | +6·4 | | | |
| 1 0 | Shade | 13·4 | 13·6 | +0·2 | 6·1 | | |
| 2 0 | Sun | 13·6 | 19·8 | +6·2 | 6·2 | | |
| 3 0 | Shade | 19·8 | 19·6 | −0·2 | 6·5 | | |
| 4 0 | Sun | 19·6 | 26·0 | +6·4 | 6·6 | 6·49 | 46·8 |
| 5 0 | Shade | 26·0 | 25·8 | −0·2 | 6·6 | | |
| 6 0 | Sun | 25·8 | 32·3 | +6·5 | 6·6 | | |
| 7 0 | Shade | 32·3 | 32·2 | −0·1 | 6·8 | | |
| 8 0 | Sun | 32·2 | 39·2 | +7·0 | 7·1 | | |
| 9 0 | Shade | 39·2 | 39·1 | −0·1 | 7·2 | | |
| 10 0 | Sun | 39·1 | 46·2 | +7·1 | 7·3 | | |
| 11 0 | Shade | 46·2 | 45·9 | −0·3 | 7·1 | 7·24 | 47·1 |
| 12 0 | Sun | 45·9 | 52·4 | +6·5 | 6·9 | | |
| 13 0 | Shade | 52·4 | 51·8 | −0·6 | 7·4 | | |
| 14 0 | Sun | 51·8 | 58·8 | +7·0 | 7·7 | | |
| 15 0 | Shade | 58·8 | 58·0 | −0·8 | | | |
| 18 23 32 0 | Sun | 17·0 | 23·0 | +6·0 | | | |
| 33 0 | Shade | 23·0 | 21·9 | −1·1 | 7·2 | | |
| 34 0 | Sun | 21·9 | 28·2 | +6·3 | 7·3 | | |
| 35 0 | Shade | 28·2 | 27·2 | −1·0 | 7·6 | | |
| 36 0 | Sun | 27·2 | 34·0 | +6·8 | 7·9 | 7·56 | 48·0 |
| 37 0 | Shade | 34·0 | 32·8 | −1·2 | 7·9 | | |
| 38 0 | Sun | 32·8 | 39·4 | +6·6 | 7·6 | | |
| 39 0 | Shade | 39·4 | 38·6 | −0·8 | 7·4 | | |
| 40 0 | Sun | 38·6 | 45·2 | +6·6 | 7·6 | | |
| 41 0 | Shade | 45·2 | 43·9 | −1·3 | 7·7 | | |
| 42 0 | Sun | 43·9 | 50·1 | +6·2 | 7·6 | | |
| 43 0 | Shade | 50·1 | 48·7 | −1·4 | 7·7 | 7·86 | 48·2 |
| 44 0 | Sun | 48·7 | 55·2 | +6·5 | 7·9 | | |
| 45 0 | Shade | 55·2 | 53·8 | −1·4 | 8·1 | | |
| 46 0 | Sun | 53·8 | 60·7 | +6·9 | 8·4 | | |
| 47 0 | Shade | 60·7 | 59·1 | −1·6 | | | |

### AUGUST 19, 1843.

| Makerstoun Mean Time of First Reading. | In Sun or Shade. | Observation. Begun. | Observation. Ended. | Change in 60s. | Effect of Sun. | Mean of Group. | Sun's Altitude. |
|---|---|---|---|---|---|---|---|
| d. h. m. s. | | Sc. div. | Sc. div. | Sc. div. | Sc. div. | Sc. div. | ° |
| 19 0 3 0 | Sun | 23·5 | 29·0 | +5·5 | | | |
| 4 0 | Shade | 29·0 | 27·1 | −1·9 | 7·6 | | |
| 5 0 | Sun | 27·1 | 33·0 | +5·9 | 7·7 | | |
| 6 0 | Shade | 33·0 | 31·3 | −1·7 | 7·9 | | |
| 7 0 | Sun | 31·3 | 37·8 | +6·5 | 8·2 | 8·01 | 48·3 |
| 8 0 | Shade | 37·8 | 36·1 | −1·7 | 8·3 | | |
| 9 0 | Sun | 36·1 | 42·8 | +6·7 | 8·3 | | |
| 10 0 | Shade | 42·8 | 41·4 | −1·4 | 8·1 | | |
| 11 0 | Sun | 41·4 | 48·1 | +6·7 | 8·0 | | |
| 12 0 | Shade | 48·1 | 46·9 | −1·2 | 7·8 | | |
| 13 0 | Sun | 46·9 | 53·5 | +6·6 | 8·0 | | |
| 14 0 | Shade | 53·5 | 52·0 | −1·5 | 8·3 | 8·33 | 48·3 |
| 15 0 | Sun | 52·0 | 59·0 | +7·0 | 8·6 | | |
| 16 0 | Shade | 59·0 | 57·3 | −1·7 | 8·8 | | |
| 17 0 | Sun | 57·3 | 64·5 | +7·2 | 8·8 | | |
| 18 0 | Shade | 64·5 | 63·0 | −1·5 | | | |
| 19 5 51 0 | Sun | 33·7 | 37·2 | +3·5 | | | |
| 52 0 | Shade | 37·2 | 36·5 | −0·7 | 3·7 | | |
| 53 0 | Sun | 36·5 | 39·0 | +2·5 | 2·8 | | |
| 54 0 | Shade | 39·0 | 39·0 | 0·0 | 2·4 | | |
| 55 0 | Sun | 39·0 | 41·3 | +2·3 | 2·3 | 2·69 | 12·6 |
| 56 0 | Shade | 41·3 | 41·4 | +0·1 | 2·4 | | |
| 57 0 | Sun | 41·4 | 44·1 | +2·7 | 2·7 | | |
| 58 0 | Shade | 44·1 | 43·9 | −0·2 | 2·5 | | |
| 59 0 | Sun | 43·9 | 45·7 | +1·8 | 2·0 | | |
| 19 6 0 0 | Shade | 45·7 | 45·5 | −0·2 | 2·0 | | |
| 1 0 | Sun | 45·5 | 47·4 | +1·9 | 2·1 | | |
| 2 0 | Shade | 47·4 | 47·2 | −0·2 | 2·1 | 2·07 | 11·5 |
| 3 0 | Sun | 47·2 | 49·1 | +1·9 | 2·1 | | |
| 4 0 | Shade | 49·1 | 48·9 | −0·2 | 2·0 | | |
| 5 0 | Sun | 48·9 | 50·7 | +1·8 | 2·2 | | |
| 6 0 | Shade | 50·7 | 50·2 | −0·5 | 2·2 | | |
| 7 0 | Sun | 50·2 | 51·9 | +1·7 | 2·3 | | |
| 8 0 | Shade | 51·9 | 51·2 | −0·7 | 2·4 | 2·29 | 10·8 |
| 9 0 | Sun | 51·2 | 52·9 | +1·7 | 2·3 | | |
| 10 0 | Shade | 52·9 | 52·3 | −0·6 | 2·3 | | |
| 11 0 | Sun | 52·3 | 54·0 | +1·7 | 2·3 | | |
| 12 0 | Shade | 54·0 | 53·3 | −0·7 | | | |

### SEPTEMBER 4, 1843.

| Makerstoun Mean Time of First Reading. | In Sun or Shade. | Observation. Begun. | Observation. Ended. | Change in 60s. | Effect of Sun. | Mean of Group. | Sun's Altitude. |
|---|---|---|---|---|---|---|---|
| d. h. m. s. | | Sc. div. | Sc. div. | Sc. div. | Sc. div. | Sc. div. | ° |
| 4 19 31 12 | Sun | 30·8 | 34·0 | +3·2 | | | |
| 32 12 | Shade | 34·0 | 34·9 | +0·9 | 2·3 | | |
| 33 12 | Sun | 34·9 | 38·2 | +3·3 | 2·5 | | |
| 34 12 | Shade | 38·2 | 39·0 | +0·8 | 2·4 | 2·37 | 19·2 |
| 35 12 | Sun | 39·0 | 42·1 | +3·1 | 2·3 | | |
| 36 12 | Shade | 42·1 | 43·0 | +0·9 | 2·3 | | |
| 37 12 | Sun | 43·0 | 46·3 | +3·3 | 2·4 | | |
| 38 12 | Shade | 46·3 | 47·2 | +0·9 | | | |

Aug. 18d 22h 40m. Barometer 29·686 in.; dry thermometer 71°·2; wet thermometer 66°·2; hazy on E. horizon; cumuli appearing on W., SSW., and N. horizon; strips of linear cirri about 20° altitude to S.; light wind from ENE.

Aug. 18d 23h 2m. Light breeze. 10m. Patches of cumuli approaching the Sun. 11m. Wind. 16m. Barometer 29·676 in.; dry thermometer 72°·6; wet thermometer 67°·4; in a few minutes cirri on the Sun, with loose patches of clouds nearly crossing it.

Aug. 18d 23h 34m. Light breeze from SSE. 41m. Calm. 42m. Cirri on the Sun; Sun clear at 43m. 23h 48m. Barometer 29·667 in.; dry thermometer 74°·4; wet thermometer 64°·7; wind blowing 0·2 lb. from SSE.; linear cirri to E., W., and S.; cumuli on horizon as before.

Aug. 19d 0h 8m. Barometer 29·658 in.; dry thermometer 75°·1; wet thermometer 65°·0; wind 0·2 lb. from SSE.; cumuli on horizon; mottled and radiated cirri. 0h 40m. The upper portion of a solar halo seen; cirri coming over the Sun.

Aug. 19d 5h 50m. Streaks of cirri and haze round horizon; none near the Sun. 6h 0m. Barometer 29·547 in.; dry thermometer 72°·4; wet thermometer 65°·3; wind 0·1 lb. from SSE. 6h 13m. Sun approaching the haze.

Sept. 4d 19h 35m. Barometer 30·200 in.; dry thermometer 47°·7; wet thermometer 46°·2; a few thin cirro-strati to NE.; a breath of wind occasionally; sky milky about the Sun, but no halo or clouds visible.

## ACTINOMETER.

| Makerstoun Mean Time of First Reading. | In Sun or Shade. | Observation. Begun. | Observation. Ended. | Change in 60s. | Effect of Sun. | Mean of Group. | Sun's Altitude. |
|---|---|---|---|---|---|---|---|
| d. h. m. s. | | Sc. div. | Sc. div. | Sc. div. | Sc. div. | Sc. div. | ° |
| **SEPTEMBER 4, 1843.** | | | | | | | |
| 4 19 59 12 | Sun | 58·5 | 62·1 | +3·6 | | | |
| 20 0 12 | Shade | 62·1 | 62·3 | +0·2 | 3·5 | | |
| 1 12 | Sun | 62·3 | 66·2 | +3·9 | 3·7 | 3·80 | 22·9 |
| 2 12 | Shade | 66·2 | 66·5 | +0·3 | 3·8 | | |
| 3 12 | Sun | 66·5 | 70·9 | +4·4 | 4·2 | | |
| 4 12 | Shade | 70·9 | 71·1 | +0·2 | | | |
| 4 20 47 12 | Sun | 62·8 | 67·0 | +4·2 | | | |
| 48 12 | Shade | 67·0 | 67·3 | +0·3 | 4·2 | | |
| 49 12 | Sun | 67·3 | 72·1 | +4·8 | 4·4 | | |
| 50 12 | Shade | 72·1 | 72·7 | +0·6 | 4·4 | 4·48 | 28·9 |
| 51 12 | Sun | 72·7 | 78·0 | +5·3 | 4·7 | | |
| 52 12 | Shade | 78·0 | 78·7 | +0·7 | 4·5 | | |
| 53 12 | Sun | 78·7 | 83·9 | +5·2 | 4·7 | | |
| 54 12 | Shade | 83·9 | 84·2 | +0·3 | | | |
| 4 21 13 12 | Shade | 32·0 | 32·9 | +0·9 | | | |
| 14 12 | Sun | 32·9 | 38·2 | +5·3 | 4·5 | | |
| 15 12 | Shade | 38·2 | 39·0 | +0·8 | 4·4 | | |
| 16 12 | Sun | 39·0 | 44·2 | +5·2 | 4·5 | | |
| 17 12 | Shade | 44·2 | 44·8 | +0·6 | 4·6 | 4·65 | 32·0 |
| 18 12 | Sun | 44·8 | 50·0 | +5·2 | 4·5 | | |
| 19 12 | Shade | 50·0 | 50·8 | +0·8 | 4·7 | | |
| 20 12 | Sun | 50·8 | 56·7 | +5·9 | 4·4 | | |
| 21 12 | Shade | 56·7 | 57·0 | +0·3 | 5·6 | | |
| 22 12 | Sun | 57·0 | 63·0 | +6·0 | | | |
| 4 21 40 12 | Shade | 62·4 | 62·0 | −0·4 | | | |
| 41 12 | Sun | 62·0 | 67·2 | +5·2 | 5·6 | | |
| 42 12 | Shade | 67·2 | 66·8 | −0·4 | 5·6 | | |
| 43 12 | Sun | 66·8 | 72·1 | +5·3 | 5·8 | | |
| 44 12 | Shade | 72·1 | 71·6 | −0·5 | 6·0 | 5·88 | 34·6 |
| 45 12 | Sun | 71·6 | 77·3 | +5·7 | 6·1 | | |
| 46 12 | Shade | 77·3 | 76·9 | −0·4 | 6·2 | | |
| 47 12 | Sun | 76·9 | 82·7 | +5·8 | | | |
| 4 22 3 12 | Shade | 32·0 | 31·0 | −1·0 | | | |
| 4 12 | Sun | 31·0 | 36·2 | +5·2 | 6·1 | | |
| 5 12 | Shade | 36·2 | 35·4 | −0·8 | 6·1 | | |
| 6 12 | Sun | 35·4 | 40·8 | +5·4 | 6·4 | | |
| 7 12 | Shade | 40·8 | 39·5 | −1·3 | 6·8 | 6·43 | 36·6 |
| 8 12 | Sun | 39·5 | 45·0 | +5·5 | 6·7 | | |
| 9 12 | Shade | 45·0 | 43·9 | −1·1 | 6·5 | | |
| 10 12 | Sun | 43·9 | 49·2 | +5·3 | | | |

| Makerstoun Mean Time of First Reading. | In Sun or Shade. | Observation. Begun. | Observation. Ended. | Change in 60s. | Effect of Sun. | Mean of Group. | Sun's Altitude. |
|---|---|---|---|---|---|---|---|
| d. h. m. s. | | Sc. div. | Sc. div. | Sc. div. | Sc. div. | Sc. div. | ° |
| **SEPTEMBER 4, 5, 1843.** | | | | | | | |
| 4 22 30 12 | Shade | 20·6 | 19·9 | −0·7 | | | |
| 31 12 | Sun | 19·9 | 25·3 | +5·4 | 6·0 | | |
| 32 12 | Shade | 25·3 | 24·7 | −0·6 | 6·2 | | |
| 33 12 | Sun | 24·7 | 30·4 | +5·7 | 6·3 | 6·10 | 38·6 |
| 34 12 | Shade | 30·4 | 29·8 | −0·6 | 6·0 | | |
| 35 12 | Sun | 29·8 | 35·0 | +5·2 | 6·0 | | |
| 36 12 | Shade | 35·0 | 34·0 | −1·0 | 6·1 | | |
| 37 12 | Sun | 34·0 | 39·0 | +5·0 | | | |
| 4 23 0 12 | Shade | 24·8 | 23·9 | −0·9 | | | |
| 1 12 | Sun | 23·9 | 29·8 | +5·9 | 6·7 | | |
| 2 12 | Shade | 29·8 | 29·0 | −0·8 | 6·8 | | |
| 3 12 | Sun | 29·0 | 35·0 | +6·0 | 6·8 | 6·70 | 40·2 |
| 4 12 | Shade | 35·0 | 34·2 | −0·8 | 6·8 | | |
| 5 12 | Sun | 34·2 | 40·2 | +6·0 | 6·6 | | |
| 6 12 | Shade | 40·2 | 39·8 | −0·4 | 6·5 | | |
| 7 12 | Sun | 39·8 | 46·0 | +6·2 | | | |
| 4 23 34 12 | Shade | 24·3 | 23·9 | −0·4 | | | |
| 35 12 | Sun | 23·9 | 29·4 | +5·5 | 5·9 | | |
| 36 12 | Shade | 29·4 | 29·0 | −0·4 | 6·1 | | |
| 37 12 | Sun | 29·0 | 34·9 | +5·9 | 6·3 | 6·40 | 41·3 |
| 38 12 | Shade | 34·9 | 34·4 | −0·5 | 6·6 | | |
| 39 12 | Sun | 34·4 | 40·6 | +6·2 | 6·7 | | |
| 40 12 | Shade | 40·6 | 40·0 | −0·6 | 6·8 | | |
| 41 12 | Sun | 40·0 | 46·2 | +6·2 | | | |
| 5 0 2 12 | Shade | 26·5 | 25·9 | −0·6 | | | |
| 3 12 | Sun | 25·9 | 31·4 | +5·5 | 6·0 | | |
| 4 12 | Shade | 31·4 | 30·9 | −0·5 | 6·3 | | |
| 5 12 | Sun | 30·9 | 36·9 | +6·0 | 6·7 | 6·57 | 41·4 |
| 6 12 | Shade | 36·9 | 36·0 | −0·9 | 6·9 | | |
| 7 12 | Sun | 36·0 | 42·0 | +6·0 | 6·8 | | |
| 8 12 | Shade | 42·0 | 41·2 | −0·8 | 6·7 | | |
| 9 12 | Sun | 41·2 | 47·0 | +5·8 | | | |
| 5 0 31 12 | Shade | 27·9 | 27·2 | −0·7 | | | |
| 32 12 | Sun | 27·2 | 33·2 | +6·0 | 6·5 | | |
| 33 12 | Shade | 33·2 | 32·9 | −0·3 | 6·4 | | |
| 34 12 | Sun | 32·9 | 39·2 | +6·3 | 6·7 | 6·68 | 40·9 |
| 35 12 | Shade | 39·2 | 38·7 | −0·5 | 6·7 | | |
| 36 12 | Sun | 38·7 | 44·8 | +6·1 | 6·8 | | |
| 37 12 | Shade | 44·8 | 44·0 | −0·8 | 7·0 | | |
| 38 12 | Sun | 44·0 | 50·3 | +6·3 | | | |

Sept. 4d 20h 1m. Dry thermometer 49°·5; wet thermometer 47°·7; slight breeze.
Sept. 4d 20h 50m. Dry thermometer 52°·7; wet thermometer 49°·4; still milky about the Sun; light breath of wind.
Sept. 4d 21h 20m. Dry thermometer 54°·4; wet thermometer 51°·0; observation at 17m 12s doubtful.
Sept. 4d 21h 44m. Dry thermometer 55°·2; wet thermometer 51°·2.
Sept. 4d 22h 7m. Dry thermometer 56°·5; wet thermometer 52°·4; light breeze.
Sept. 4d 22h 34m. Dry thermometer 57°·9; wet thermometer 53°·5.
Sept. 4d 23h 4m. Dry thermometer 59°·1; wet thermometer 54°·0.
Sept. 4d 23h 38m. Dry thermometer 61°·2; wet thermometer 55°·1.
Sept. 5d 0h 5m. Dry thermometer 62°·9; wet thermometer 55°·5.
Sept. 5d 0h 35m. Dry thermometer 64°·1; wet thermometer 57°·4.

## ACTINOMETER.

| Makerstoun Mean Time of First Reading. | In Sun or Shade. | Observation. Begun. | Observation. Ended. | Change in 60s. | Effect of Sun. | Mean of Group. | Sun's Altitude. |
|---|---|---|---|---|---|---|---|
| d. h. m. s. | | Sc. div. | Sc. div. | Sc. div. | Sc. div. | Sc. div. | ° |
| **SEPTEMBER 5, 1843.** | | | | | | | |
| 5 1 2 12 | Shade | 33·5 | 33·0 | −0·5 | | | |
| 3 12 | Sun | 33·0 | 38·7 | +5·7 | 5·7 | | |
| 4 12 | Shade | 38·7 | 39·2 | +0·5 | 5·7 | | |
| 5 12 | Sun | 39·2 | 46·0 | +6·8 | 6·7 | | |
| 6 12 | Shade | 46·0 | 45·7 | −0·3 | 6·8 | 6·40 | 39·6 |
| 7 12 | Sun | 45·7 | 52·0 | +6·3 | 6·5 | | |
| 8 12 | Shade | 52·0 | 52·0 | 0·0 | 7·0 | | |
| 9 12 | Sun | 52·0 | 59·6 | +7·6 | | | |
| 5 1 41 12 | Shade | 30·9 | 30·6 | −0·3 | | | |
| 42 12 | Sun | 30·6 | 37·2 | +6·6 | 6·8 | | |
| 43 12 | Shade | 37·2 | 37·0 | −0·2 | 7·0 | | |
| 44 12 | Sun | 37·0 | 44·0 | +7·0 | 7·1 | 7·05 | 37·1 |
| 45 12 | Shade | 44·0 | 44·0 | 0·0 | 7·3 | | |
| 46 12 | Sun | 44·0 | 51·5 | +7·5 | | | |
| **SEPTEMBER 6, 7, 1843.** | | | | | | | |
| 6 23 31 20 | Shade | 30·9 | 32·9 | +2·0 | | | |
| 32 20 | Sun | 32·9 | 40·0 | +7·1 | 5·2 | | |
| 33 20 | Shade | 40·0 | 41·9 | +1·9 | 5·2 | | |
| 34 20 | Sun | 41·9 | 49·1 | +7·2 | 5·6 | | |
| 35 20 | Shade | 49·1 | 50·4 | +1·3 | 6·0 | 5·65 | 40·5 |
| 36 20 | Sun | 50·4 | 57·8 | +7·4 | 6·1 | | |
| 37 20 | Shade | 57·8 | 59·2 | +1·4 | 5·8 | | |
| 38 20 | Sun | 59·2 | 66·3 | +7·1 | | | |
| 7 0 20 20 | Sun | 26·7 | 33·5 | +6·8 | | | |
| 21 50 | Shade | 34·9 | 34·0 | −0·9 | 7·6 | | |
| 22 50 | Sun | 34·0 | 40·7 | +6·7 | 7·5 | | |
| 24 50 | Shade | 44·7 | 44·1 | −0·6 | 7·1 | 7·22 | 40·4 |
| 26 20 | Sun | 44·0 | 50·3 | +6·3 | 6·9 | | |
| 27 50 | Shade | 50·7 | 50·0 | −0·7 | 7·0 | | |
| 29 20 | Sun | 49·9 | 56·1 | +6·2 | | | |
| **SEPTEMBER 7, 1843.** | | | | | | | |
| 7 22 58 22 | Sun | 26·3 | 35·2 | +8·9 | | | |
| 59 52 | Shade | 37·0 | 40·0 | +3·0 | 5·4 | | |
| 23 1 22 | Sun | 41·0 | 49·0 | +8·0 | 5·6 | 5·60 | 39·0 |
| 3 22 | Shade | 51·9 | 53·8 | +1·9 | 5·8 | | |
| 4 22 | Sun | 53·8 | 61·2 | +7·4 | | | |
| 7 23 8 22 | Sun | 24·9 | 33·0 | +8·1 | | | |
| 9 52 | Shade | 34·1 | 35·6 | +1·5 | 6·3 | | |
| 11 22 | Sun | 36·1 | 43·6 | +7·5 | 6·3 | 6·30 | 39·4 |
| 12 52 | Shade | 44·2 | 45·1 | +0·9 | 6·3 | | |
| 14 22 | Sun | 45·3 | 52·2 | +6·9 | | | |
| **SEPTEMBER 7, 8, 1843.** | | | | | | | |
| 7 23 39 22 | Sun | 26·7 | 33·0 | +6·3 | | | |
| 41 22 | Shade | 33·2 | 32·9 | −0·3 | 6·4 | | |
| 42 22 | Sun | 32·9 | 38·9 | +6·0 | 6·3 | | |
| 43 52 | Shade | 39·0 | 38·8 | −0·2 | 6·3 | | |
| 45 22 | Sun | 38·5 | 44·7 | +6·2 | 6·6 | 6·51 | 40·2 |
| 47 12 | Shade | 44·7 | 44·0 | −0·7 | 6·8 | | |
| 48 22 | Sun | 44·0 | 49·9 | +5·9 | 6·6 | | |
| 49 52 | Shade | 50·0 | 49·3 | −0·7 | 6·6 | | |
| 51 22 | Sun | 49·1 | 55·0 | +5·9 | | | |
| 8 0 0 22 | Sun | 27·8 | 33·3 | +5·5 | | | |
| 1 52 | Shade | 33·0 | 31·8 | −1·2 | 6·5 | | |
| 3 22 | Sun | 30·9 | 36·1 | +5·2 | 6·7 | | |
| 4 52 | Shade | 35·7 | 33·9 | −1·8 | 6·8 | | |
| 6 22 | Sun | 32·9 | 37·7 | +4·8 | 6·7 | 6·71 | 40·2 |
| 7 52 | Shade | 37·0 | 35·1 | −1·9 | 6·8 | | |
| 9 22 | Sun | 34·2 | 39·2 | +5·0 | 6·7 | | |
| 10 52 | Shade | 38·9 | 37·3 | −1·6 | 6·8 | | |
| 12 22 | Sun | 36·7 | 42·0 | +5·3 | | | |
| 8 0 38 22 | Sun | 17·2 | 23·9 | +6·7 | | | |
| 39 52 | Shade | 23·9 | 23·8 | −0·1 | 6·6 | | |
| 41 22 | Sun | 23·4 | 29·7 | +6·3 | 6·7 | | |
| 42 52 | Shade | 29·8 | 29·1 | −0·7 | 7·0 | | |
| 44 22 | Sun | 28·8 | 35·1 | +6·3 | 6·8 | 6·71 | 39·4 |
| 45 52 | Shade | 35·1 | 34·8 | −0·3 | 6·6 | | |
| 47 22 | Sun | 34·4 | 40·8 | +6·4 | 6·7 | | |
| 48 52 | Shade | 41·0 | 40·7 | −0·3 | 6·6 | | |
| 50 22 | Sun | 40·2 | 46·4 | +6·2 | | | |
| 8 1 5 22 | Sun | 39·8 | 45·3 | +5·5 | | | |
| 6 52 | Shade | 45·1 | 44·0 | −1·1 | 6·8 | | |
| 8 22 | Sun | 43·2 | 49·0 | +5·8 | 6·9 | | |
| 9 52 | Shade | 48·9 | 47·8 | −1·1 | 6·9 | | |
| 11 22 | Sun | 47·2 | 53·0 | +5·8 | 6·9 | 6·89 | 38·1 |
| 12 52 | Shade | 52·9 | 51·9 | −1·0 | 6·9 | | |
| 14 22 | Sun | 51·3 | 57·3 | +6·0 | 6·9 | | |
| 15 52 | Shade | 57·2 | 56·3 | −0·9 | 6·9 | | |
| 17 22 | Sun | 55·9 | 62·0 | +6·1 | | | |
| 8 1 35 22 | Sun | 50·2 | 56·5 | +6·3 | | | |
| 36 52 | Shade | 56·3 | 55·3 | −1·0 | 7·0 | | |
| 38 22 | Sun | 54·8 | 60·6 | +5·8 | 6·9 | | |
| 40 7 | Shade | 60·2 | 59·0 | −1·2 | 7·1 | | |
| 41 22 | Sun | 58·8 | 64·8 | +6·0 | 7·2 | 7·01 | 36·1 |
| 42 52 | Shade | 64·3 | 63·1 | −1·2 | 7·0 | | |
| 44 22 | Sun | 62·3 | 68·0 | +5·7 | 7·0 | | |
| 45 52 | Shade | 67·1 | 65·7 | −1·4 | 6·9 | | |
| 47 22 | Sun | 64·9 | 70·1 | +5·2 | | | |

**Sept.** 5d 1h 6m. Dry thermometer 65°·4; wet thermometer 58°·9; cirro-strati gathering to NW.

**Sept.** 5d 1h 40m. Dry thermometer 66°·2; wet thermometer 57°·2; cirro-cumuli in strata covering the sky, and near the Sun. 48m. Cirro-cumuli on the Sun, and in zenith. In all the shade observations the screen was placed near the instrument, but changed every observation.

**Sept.** 6d 23h 30m. Sky clear near the Sun; a few mottled cirri near the Sun; wind blowing 0·3 lb. from SW. In the shade observations the screen was placed at a distance of 18 inches from the instrument. 23h 35m. Dry thermometer 66°·8; wet thermometer 57°·6.

**Sept.** 7d 0h 20m. Dry thermometer 67°·7; wet thermometer 58°·0. 0h 22m 50s. At this Sun observation the instrument was exposed 90s instead of 60s; the reading at 23m 50s has been obtained by taking ⅔ of the rise in 90s.

**Sept.** 7d 23h 2m. Dry thermometer 71°·1; wet thermometer 62°·8; a few patches of mottled cirri and cirro-strati, but not near the Sun; [light breeze.

**Sept.** 7d 23h 12m. Sky as before; brownish haze on horizon; breeze; dry thermometer 72°·5; wet thermometer 63°·5.

**Sept.** 8d 0h 6m. Dry thermometer 73°·0; wet thermometer 64°·3. Breeze at 0h 2m; calm at 10m.

**Sept.** 8d 0h 45m. Dry thermometer 73°·8; wet thermometer 65°·1; curled cirri coming up from NW.

**Sept.** 8d 1h 12m. Dry thermometer 75°·3; wet thermometer 65°·5.

**Sept.** 8d 1h 35m. Strips of cirri approaching the Sun. 41m. Dry thermometer 76°·0; wet thermometer 66°·1. 48m. Reticulated cirri approaching the Sun very nearly; some of the finer filaments have perhaps already reached it.

## ACTINOMETER.

| Makerstoun Mean Time of First Reading. | In Sun or Shade. | Observation. Begun. | Observation. Ended. | Change in 60s. | Effect of Sun. | Mean of Group. | Sun's Altitude. |
|---|---|---|---|---|---|---|---|
| d. h. m. s. | | Sc. div. | Sc. div. | Sc. div. | Sc. div. | Sc. div. | ° |
| **SEPTEMBER 8, 1843.** | | | | | | | |
| 8 2 30 42 | Sun | 54·0 | 60·2 | +6·2 | | | |
| 32 22 | Shade | 60·0 | 59·2 | −0·8 | 6·9 | | |
| 33 22 | Sun | 59·2 | 65·3 | +6·1 | 7·1 | | |
| 34 52 | Shade | 65·1 | 64·0 | −1·1 | 7·0 | 6·98 | 31·2 |
| 35 52 | Sun | 64·0 | 69·8 | +5·8 | 7·0 | | |
| 37 22 | Shade | 69·2 | 67·9 | −1·3 | 6·9 | | |
| 38 22 | Sun | 67·9 | 73·3 | +5·4 | | | |
| 8 2 46 22 | Sun | 68·0 | 72·3 | +4·3 | | | |
| 47 57 | Shade | 71·0 | 68·2 | −2·8 | 7·0 | | |
| 48 57 | Sun | 68·2 | 72·3 | +4·1 | 6·7 | 6·77 | 29·8 |
| 50 22 | Shade | 71·4 | 68·9 | −2·5 | 6·6 | | |
| 51 22 | Sun | 68·9 | 73·0 | +4·1 | | | |
| **SEPTEMBER 21, 1843.** | | | | | | | |
| 21 17 44 30 | Sun | 35·8 | 35·3 | −0·5 | | | |
| 46 0 | Shade | 35·1 | 29·8 | −5·3 | | | |
| 47 0 | Sun | 29·8 | 29·2 | −0·6 | | | |
| 48 30 | Shade | 28·9 | 28·4 | −0·5 | 0·0 | | |
| 49 30 | Sun | 28·4 | 27·9 | −0·5 | 0·1 | | |
| 51 0 | Shade | 27·8 | 27·1 | −0·7 | 0·3 | 0·26 | 0·7 |
| 52 0 | Sun | 27·1 | 26·9 | −0·2 | 0·5 | | |
| 53 30 | Shade | 26·6 | 26·0 | −0·6 | 0·4 | | |
| 54 30 | Sun | 26·0 | 25·8 | −0·2 | | | |
| 56 0 | Shade | 25·7 | 30·0 | +4·3 | | | |
| 57 0 | Sun | 30·0 | 29·8 | −0·2 | | | |
| 58 35 | Shade | 29·5 | 29·0 | −0·5 | 0·3 | | |
| 59 35 | Sun | 29·0 | 28·8 | −0·2 | 0·3 | | |
| 21 18 1 0 | Shade | 28·7 | 28·1 | −0·6 | 0·5 | | |
| 2 0 | Sun | 28·1 | 28·0 | −0·1 | 0·4 | | |
| 3 30 | Shade | 28·0 | 27·6 | −0·4 | 0·3 | 0·33 | 2·4 |
| 4 30 | Sun | 27·6 | 27·6 | 0·0 | 0·4 | | |
| 6 0 | Shade | 27·3 | 27·0 | −0·3 | 0·3 | | |
| 7 0 | Sun | 27·0 | 27·0 | 0·0 | 0·2 | | |
| 8 40 | Shade | 26·9 | 26·7 | −0·2 | 0·3 | | |
| 9 40 | Sun | 26·7 | 26·8 | +0·1 | | | |
| 21 18 14 0 | Sun | 27·8 | 28·0 | +0·2 | | | |
| 15 30 | Shade | 28·0 | 27·7 | −0·3 | 0·5 | | |
| 16 30 | Sun | 27·7 | 28·0 | +0·3 | 0·6 | | |
| 18 0 | Shade | 27·9 | 27·6 | −0·3 | 0·7 | | |
| 19 0 | Sun | 27·6 | 28·0 | +0·4 | 0·6 | 0·54 | 4·4 |
| 20 30 | Shade | 27·8 | 27·7 | −0·1 | 0·4 | | |
| 21 30 | Sun | 27·7 | 28·0 | +0·3 | 0·5 | | |
| 23 0 | Shade | 28·0 | 27·8 | −0·2 | 0·5 | | |
| **SEPTEMBER 21, 1843.** | | | | | | | |
| 21 18 24 0 | Sun | 27·8 | 28·2 | +0·4 | 0·6 | | |
| 25 45 | Shade | 28·1 | 27·9 | −0·2 | 0·8 | | |
| 26 45 | Sun | 27·9 | 28·7 | +0·8 | 1·1 | | |
| 28 10 | Shade | 28·6 | 28·2 | −0·4 | 1·2 | 0·92 | 5·5 |
| 29 10 | Sun | 28·2 | 28·9 | +0·7 | 1·0 | | |
| 30 30 | Shade | 28·9 | 28·7 | −0·2 | 0·8 | | |
| 31 30 | Sun | 28·7 | 29·2 | +0·5 | 0·6 | | |
| 33 0 | Shade | 29·0 | 28·9 | −0·1 | 0·7 | | |
| 34 0 | Sun | 28·9 | 29·6 | +0·7 | 1·0 | | |
| 35 30 | Shade | 29·6 | 29·2 | −0·4 | 1·1 | 0·90 | 6·5 |
| 36 30 | Sun | 29·2 | 30·0 | +0·8 | 1·1 | | |
| 38 0 | Shade | 30·0 | 29·9 | −0·1 | 0·9 | | |
| 39 0 | Sun | 29·9 | 30·8 | +0·9 | | | |
| 21 19 22 0 | Sun | 34·0 | 36·3 | +2·3 | | | |
| 23 30 | Shade | 37·0 | 37·7 | +0·7 | 1·5 | | |
| 24 30 | Sun | 37·7 | 39·9 | +2·2 | 1·6 | | |
| 26 15 | Shade | 40·3 | 40·9 | +0·6 | 1·7 | | |
| 27 15 | Sun | 40·9 | 43·3 | +2·4 | 2·0 | 2·09 | 13·7 |
| 28 40 | Shade | 43·9 | 44·1 | +0·2 | 2·5 | | |
| 29 40 | Sun | 44·1 | 47·1 | +3·0 | 2·8 | | |
| 31 20 | Shade | 47·7 | 47·9 | +0·2 | 2·5 | | |
| 32 20 | Sun | 47·9 | 50·4 | +2·5 | | | |
| 21 20 6 0 | Sun | 55·9 | 59·4 | +3·5 | | | |
| 7 30 | Shade | 60·0 | 60·2 | +0·2 | 3·5 | | |
| 8 30 | Sun | 60·2 | 64·1 | +3·9 | 3·7 | | |
| 10 0 | Shade | 64·7 | 65·0 | +0·3 | 3·6 | | |
| 11 0 | Sun | 65·0 | 68·9 | +3·9 | 3·6 | 3·56 | 19·3 |
| 12 30 | Shade | 69·0 | 69·3 | +0·3 | 3·5 | | |
| 13 30 | Sun | 69·3 | 73·1 | +3·8 | 3·6 | | |
| 15 0 | Shade | 73·7 | 73·9 | +0·2 | 3·4 | | |
| 16 0 | Sun | 73·9 | 77·3 | +3·4 | | | |
| 21 21 14 0 | Sun | 52·7 | 57·8 | +5·1 | | | |
| 15 30 | Shade | 58·2 | 59·0 | +0·8 | 4·3 | | |
| 16 30 | Sun | 59·0 | 64·2 | +5·2 | 4·7 | | |
| 18 0 | Shade | 64·9 | 65·1 | +0·2 | 5·0 | | |
| 19 0 | Sun | 65·1 | 70·4 | +5·3 | 5·1 | 4·83 | 26·8 |
| 20 30 | Shade | 70·9 | 71·2 | +0·3 | 4·9 | | |
| 21 30 | Sun | 71·2 | 76·3 | +5·1 | 4·9 | | |
| 23 0 | Shade | 76·8 | 76·9 | +0·1 | 4·9 | | |
| 24 0 | Sun | 76·9 | 81·8 | +4·9 | | | |

Sept. 8d 2h 35m. Dry thermometer 76°·2; wet thermometer 66°·0; Sun clear of cirri, although thin sheets are both above and below it.

Sept. 8d 2h 46m. Cirri approaching the Sun; breeze. 49m. Thin cirri occasionally on the Sun; dry thermometer 76°·2; wet thermometer 65°·4.

Sept. 21d 17h 45m. Streak of cirro-stratus to NE.; sky reddish to E. 59m. Streaks of cirro-strati near the Sun, but under it. 18h 5m. Cirro-strati almost touching the lower limb of the Sun; at 8m the Sun quite clear of the cirro-strati. 18h 10m. Barometer 30·210 in.; dry thermometer 40°·8; wet thermometer 40°·7. 18h 14m. Misty cirro-strati from NE. to E. 18h 17m. Becoming hazy near the Sun, and little patches of hazy cirri pass above and below it; doubtless some of them pass over it, but they must be very small. 18h 29m. Hazy-looking near the Sun. 18h 34m. Scud moving from NE. across the zenith, and below the Sun. 18h 39m. Sky covered with thin scud, still the Sun remains pretty free from it. 18h 40m. Barometer 30·225 in.; dry thermometer 42°·6; wet thermometer 42°·0.

Sept. 21d 19h 21m. Somewhat hazy-looking about the Sun, but no clouds; streaks of cirrus to E. at 31m. 19h 34m. Barometer 30·237 in.; dry thermometer 47°·2; wet thermometer 46°·0.

Sept. 21d 20h 5m. A strip of hazy cirro-stratus on E. horizon. 20h 18m. Barometer 30·248 in.; dry thermometer 49°·2; wet thermometer 48°·1.

Sept. 21d 21h 14m. Rather hazy about the Sun.

## ACTINOMETER.

| Makerstoun Mean Time of First Reading. | In Sun or Shade. | Observation. Begun. | Observation. Ended. | Change in 60s. | Effect of Sun. | Mean of Group. | Sun's Altitude. |
|---|---|---|---|---|---|---|---|
| d. h. m. s. | | Sc. div. | Sc. div. | Sc. div. | Sc. div. | Sc. div. | ° |
| **SEPTEMBER 21, 22, 1843.** | | | | | | | |
| 21 22 21 10 | Sun | 33·0 | 40·3 | +7·3 | | | |
| 22 30 | Shade | 41·0 | 42·4 | +1·4 | 5·7 | | |
| 23 30 | Sun | 42·4 | 49·4 | +7·0 | 5·6 | | |
| 25 0 | Shade | 50·4 | 51·9 | +1·5 | 5·5 | | |
| 26 0 | Sun | 51·9 | 59·0 | +7·1 | 5·9 | 5·93 | 32·2 |
| 27 30 | Shade | 59·9 | 60·9 | +1·0 | 6·0 | | |
| 28 30 | Sun | 60·9 | 67·8 | +6·9 | 6·3 | | |
| 30 10 | Shade | 68·7 | 69·0 | +0·3 | 6·5 | | |
| 31 10 | Sun | 69·0 | 75·7 | +6·7 | | | |
| 21 23 18 0 | Sun | 36·8 | 43·8 | +7·0 | | | |
| 19 30 | Shade | 44·0 | 43·9 | −0·1 | 6·6 | | |
| 20 30 | Sun | 43·9 | 50·0 | +6·1 | 6·3 | | |
| 22 0 | Shade | 50·1 | 49·9 | −0·2 | 6·3 | | |
| 23 0 | Sun | 49·9 | 56·1 | +6·2 | 6·7 | 6·57 | 34·6 |
| 24 30 | Shade | 56·0 | 55·2 | −0·8 | 6·8 | | |
| 25 30 | Sun | 55·2 | 61·0 | +5·8 | 6·6 | | |
| 27 0 | Shade | 61·0 | 60·1 | −0·9 | 6·7 | | |
| 28 0 | Sun | 60·1 | 65·8 | +5·7 | | | |
| 22 0 18 0 | Sun | 31·6 | 37·0 | +5·4 | | | |
| 19 30 | Shade | 37·3 | 37·4 | +0·1 | 5·7 | | |
| 20 30 | Sun | 37·4 | 43·6 | +6·2 | 6·2 | | |
| 22 0 | Shade | 43·9 | 43·9 | 0·0 | 6·2 | | |
| 23 0 | Sun | 43·9 | 50·1 | +6·2 | 6·2 | 6·20 | 34·6 |
| 24 30 | Shade | 50·2 | 50·1 | −0·1 | 6·3 | | |
| 25 30 | Sun | 50·1 | 56·2 | +6·1 | 6·3 | | |
| 27 0 | Shade | 56·4 | 56·1 | −0·3 | 6·5 | | |
| 28 0 | Sun | 56·1 | 62·4 | +6·3 | | | |
| 22 1 19 0 | Sun | 31·4 | 37·9 | +6·5 | | | |
| 20 30 | Shade | 38·3 | 38·9 | +0·6 | 5·8 | | |
| 21 30 | Sun | 38·9 | 45·2 | +6·3 | 5·9 | | |
| 23 0 | Shade | 45·9 | 46·1 | +0·2 | 6·2 | | |
| 24 0 | Sun | 46·1 | 52·7 | +6·6 | 6·3 | 6·13 | 31·9 |
| 25 30 | Shade | 53·1 | 53·6 | +0·5 | 6·1 | | |
| 26 30 | Sun | 53·6 | 60·2 | +6·6 | 6·3 | | |
| 28 0 | Shade | 60·7 | 60·8 | +0·1 | 6·7 | | |
| 29 0 | Sun | 60·8 | 67·8 | +7·0 | | | |
| 22 1 46 0 | Sun | 27·2 | 33·9 | +6·7 | | | |
| 47 30 | Shade | 34·0 | 33·9 | −0·1 | 6·6 | | |
| 48 30 | Sun | 33·9 | 40·3 | +6·4 | 6·7 | | |
| 50 0 | Shade | 40·4 | 40·0 | −0·4 | 6·7 | | |
| 51 0 | Sun | 40·0 | 46·3 | +6·3 | 6·7 | 6·73 | 29·9 |
| 52 30 | Shade | 46·3 | 45·9 | −0·4 | 6·5 | | |
| 53 30 | Sun | 45·9 | 51·8 | +5·9 | 6·7 | | |
| 55 0 | Shade | 51·6 | 50·4 | −1·2 | 7·2 | | |
| 56 0 | Sun | 50·4 | 56·6 | +6·2 | | | |
| **SEPTEMBER 22, 1843.** | | | | | | | |
| 22 2 16 0 | Sun | 21·9 | 27·9 | +6·0 | | | |
| 17 30 | Shade | 27·6 | 26·5 | −1·1 | 6·9 | | |
| 18 30 | Sun | 26·5 | 32·2 | +5·7 | 7·0 | | |
| 20 0 | Shade | 32·0 | 30·6 | −1·4 | 6·9 | | |
| 21 0 | Sun | 30·6 | 35·9 | +5·3 | 6·6 | 6·74 | 27·2 |
| 22 30 | Shade | 35·2 | 33·9 | −1·3 | 6·5 | | |
| 23 30 | Sun | 33·9 | 39·0 | +5·1 | 6·6 | | |
| 25 0 | Shade | 38·6 | 37·0 | −1·6 | 6·7 | | |
| 26 0 | Sun | 37·0 | 42·1 | +5·1 | | | |
| 22 2 46 0 | Sun | 20·5 | 25·8 | +5·3 | | | |
| 47 30 | Shade | 25·4 | 24·0 | −1·4 | 6·6 | | |
| 48 30 | Sun | 24·0 | 29·1 | +5·1 | 6·6 | | |
| 50 0 | Shade | 28·6 | 27·0 | −1·6 | 6·6 | | |
| 51 0 | Sun | 27·0 | 32·0 | +5·0 | 6·5 | 6·44 | 24·2 |
| 52 30 | Shade | 31·3 | 29·9 | −1·4 | 6·3 | | |
| 53 30 | Sun | 29·9 | 34·7 | +4·8 | 6·3 | | |
| 55 0 | Shade | 34·0 | 32·5 | −1·5 | 6·2 | | |
| 56 0 | Sun | 32·5 | 37·1 | +4·6 | | | |
| 22 3 13 0 | Sun | 32·9 | 36·3 | +3·4 | | | |
| 14 30 | Shade | 35·1 | 32·0 | −3·1 | 6·2 | | |
| 15 30 | Sun | 32·0 | 34·9 | +2·9 | 6·1 | | |
| 17 0 | Shade | 33·7 | 30·4 | −3·3 | 6·5 | 6·36 | 21·2 |
| 18 0 | Sun | 30·4 | 33·8 | +3·4 | 6·6 | | |
| 19 30 | Shade | 32·1 | 29·0 | −3·1 | 6·4 | | |
| 20 30 | Sun | 29·0 | 32·3 | +3·3 | | | |
| 22 4 30 0 | Sun | 32·0 | 34·1 | +2·1 | | | |
| 31 30 | Shade | 33·0 | 30·2 | −2·8 | 4·8 | | |
| 32 30 | Sun | 30·2 | 32·0 | +1·8 | 4·9 | | |
| 34 0 | Shade | 30·7 | 27·4 | −3·3 | 5·0 | | |
| 35 0 | Sun | 27·4 | 28·9 | +1·5 | 4·7 | 4·76 | 13·9 |
| 36 30 | Shade | 27·0 | 23·8 | −3·2 | 4·3 | | |
| 37 30 | Sun | 23·8 | 24·4 | +0·6 | 4·6 | | |
| 39 0 | Shade | 23·7 | 19·0 | −4·7 | 5·0 | | |
| 40 0 | Sun | 19·0 | 19·0 | 0·0 | | | |
| 22 4 56 0 | Sun | 25·7 | 27·0 | +1·3 | | | |
| 57 30 | Shade | 25·9 | 22·9 | −3·0 | 3·8 | | |
| 58 30 | Sun | 22·9 | 23·3 | +0·4 | 3·6 | | |
| 5 0 0 | Shade | 21·9 | 18·5 | −3·4 | 3·6 | | |
| 1 0 | Sun | 18·5 | 18·4 | −0·1 | 3·5 | 3·46 | 7·7 |
| 2 30 | Shade | 16·9 | 13·1 | −3·8 | 3·7 | | |
| 3 30 | Sun | 13·1 | 13·0 | −0·1 | 3·2 | | |
| 5 0 | Shade | 10·0 | 7·1 | −2·9 | 2·8 | | |
| 6 0 | Sun | 7·1 | 7·0 | −0·1 | | | |

Sept. 21d 22h 30m. Barometer 30·268 in.; dry thermometer 58°·0; wet thermometer 54°·8; cloudless.
Sept. 21d 23h 29m. Barometer 30·267 in.; dry thermometer 60°·7; wet thermometer 56°·6.
Sept. 22d 0h 30m. Dry thermometer 63°·7; wet thermometer 58°·7.
Sept. 22d 1h 30m. Dry thermometer 67°·0; wet thermometer 60°·0.
Sept. 22d 2h 27m. Dry thermometer 68°·7; wet thermometer 61°·3.

## ACTINOMETER.

| Makerstoun Mean Time of First Reading. | In Sun or Shade. | Observation. Begun. | Observation. Ended. | Change in 60s. | Effect of Sun. | Mean of Group. | Sun's Altitude. |
|---|---|---|---|---|---|---|---|
| d. h. m. s. | | Sc. div. | Sc. div. | Sc. div. | Sc. div. | Sc. div. | ° |
| **JANUARY 13, 1844.** | | | | | | | |
| 13 0 55 0 | Sun | 38·3 | 39·8 | +1·5 | | | |
| 56 30 | Shade | 39·8 | 39·0 | −0·8 | 2·1 | | |
| 57 30 | Sun | 39·0 | 40·1 | +1·1 | 2·0 | | |
| 59 0 | Shade | 40·0 | 39·0 | −1·0 | 2·0 | | |
| 1 0 0 | Sun | 39·0 | 40·0 | +1·0 | 2·1 | 2·06 | 12·2 |
| 1 30 | Shade | 39·7 | 38·6 | −1·1 | 2·0 | | |
| 2 30 | Sun | 38·6 | 39·5 | +0·9 | 2·1 | | |
| 4 0 | Shade | 39·1 | 37·9 | −1·2 | 2·1 | | |
| 5 0 | Sun | 37·9 | 38·8 | +0·9 | | | |
| 13 1 27 0 | Sun | 23·0 | 24·0 | +1·0 | | | |
| 28 30 | Shade | 23·9 | 23·3 | −0·6 | 1·5 | | |
| 29 30 | Sun | 23·3 | 24·2 | +0·9 | 1·4 | | |
| 31 0 | Shade | 24·1 | 23·7 | −0·4 | 1·3 | | |
| 32 0 | Sun | 23·7 | 24·5 | +0·8 | 1·2 | 1·29 | 10·9 |
| 33 30 | Shade | 24·3 | 23·9 | −0·4 | 1·2 | | |
| 34 30 | Sun | 23·9 | 24·7 | +0·8 | 1·2 | | |
| 36 0 | Shade | 24·4 | 24·0 | −0·4 | 1·2 | | |
| 37 0 | Sun | 24·0 | 24·8 | +0·8 | | | |
| **FEBRUARY 5, 6, 1844.** | | | | | | | |
| 5 23 49 53 | Sun | 20·0 | 20·3 | +0·3 | | | |
| 51 23 | Shade | 20·8 | 21·0 | +0·2 | 0·3 | | |
| 52 23 | Sun | 21·0 | 21·7 | +0·7 | 0·5 | | |
| 53 53 | Shade | 22·0 | 22·3 | +0·3 | 0·5 | | |
| 54 53 | Sun | 22·3 | 23·3 | +1·0 | 0·7 | 0·66 | 18·5 |
| 56 23 | Shade | 23·7 | 24·0 | +0·3 | 0·8 | | |
| 57 23 | Sun | 24·0 | 25·2 | +1·2 | 0·9 | | |
| 58 53 | Shade | 25·6 | 25·9 | +0·3 | 0·9 | | |
| 6 0 0 23 | Sun | 25·9 | 27·1 | +1·2 | | | |
| 6 0 20 53 | Sun | 23·3 | 25·2 | +1·9 | | | |
| 22 23 | Shade | 25·6 | 25·8 | +0·2 | 1·8 | | |
| 23 23 | Sun | 25·8 | 28·0 | +2·2 | 2·1 | | |
| 24 53 | Shade | 28·3 | 28·4 | +0·1 | 2·2 | | |
| 25 53 | Sun | 28·4 | 30·9 | +2·5 | 2·5 | 2·23 | 18·6 |
| 27 23 | Shade | 31·0 | 31·0 | 0·0 | 2·3 | | |
| 28 23 | Sun | 31·0 | 33·1 | +2·1 | 2·2 | | |
| 29 53 | Shade | 33·4 | 33·1 | −0·3 | 2·5 | | |
| 30 53 | Sun | 33·1 | 35·3 | +2·2 | | | |
| 6 1 7 53 | Sun | 25·9 | 27·9 | +2·0 | | | |
| 9 23 | Shade | 28·1 | 28·3 | +0·2 | 1·7 | | |
| 10 23 | Sun | 28·3 | 30·2 | +1·9 | 1·8 | | |
| 11 53 | Shade | 30·6 | 30·6 | 0·0 | 1·7 | | |
| 12 53 | Sun | 30·6 | 32·2 | +1·6 | 1·7 | 1·79 | 17·5 |
| 14 23 | Shade | 32·7 | 32·5 | −0·2 | 1·8 | | |
| 15 23 | Sun | 32·5 | 34·1 | +1·6 | 1·8 | | |
| 16 53 | Shade | 34·5 | 34·2 | −0·3 | 2·0 | | |
| 17 53 | Sun | 34·2 | 36·0 | +1·8 | | | |
| **FEBRUARY 6, 1844.** | | | | | | | |
| 6 1 48 53 | Sun | 24·0 | 25·9 | +1·9 | | | |
| 50 23 | Shade | 26·1 | 26·2 | +0·1 | 1·7 | | |
| 51 23 | Sun | 26·2 | 28·0 | +1·8 | 1·7 | | |
| 52 53 | Shade | 28·3 | 28·3 | 0·0 | 1·8 | | |
| 53 53 | Sun | 28·3 | 30·2 | +1·9 | 2·0 | 1·91 | 15·5 |
| 55 23 | Shade | 30·2 | 30·0 | −0·2 | 2·1 | | |
| 56 23 | Sun | 30·0 | 32·0 | +2·0 | 2·2 | | |
| 57 53 | Shade | 32·0 | 31·9 | −0·1 | 1·9 | | |
| 58 53 | Sun | 32·0 | 33·7 | +1·7 | | | |
| 6 2 38 53 | Sun | 33·0 | 34·6 | +1·6 | | | |
| 40 23 | Shade | 34·9 | 34·4 | −0·5 | 1·8 | | |
| 41 23 | Sun | 34·4 | 35·5 | +1·1 | 1·7 | | |
| 42 53 | Shade | 35·7 | 35·1 | −0·6 | 1·6 | | |
| 43 53 | Sun | 35·1 | 36·0 | +0·9 | 1·4 | 1·69 | 12·0 |
| 45 23 | Shade | 36·3 | 35·8 | −0·5 | 1·5 | | |
| 46 23 | Sun | 35·8 | 36·9 | +1·1 | 1·8 | | |
| 47 53 | Shade | 36·9 | 36·0 | −0·9 | 2·0 | | |
| 48 53 | Sun | 36·0 | 37·0 | +1·0 | | | |
| 6 3 18 53 | Sun | 26·7 | 27·8 | +1·1 | | | |
| 20 23 | Shade | 28·0 | 27·7 | −0·3 | 1·3 | | |
| 21 23 | Sun | 27·7 | 28·7 | +1·0 | 1·2 | | |
| 22 53 | Shade | 28·9 | 28·9 | 0·0 | 0·9 | | |
| 23 53 | Sun | 28·9 | 29·8 | +0·9 | 1·1 | 1·04 | 8·2 |
| 25 23 | Shade | 29·9 | 29·6 | −0·3 | 1·1 | | |
| 26 23 | Sun | 29·6 | 30·3 | +0·7 | 0·9 | | |
| 27 53 | Shade | 30·1 | 29·9 | −0·2 | 0·8 | | |
| 28 53 | Sun | 29·9 | 30·4 | +0·5 | | | |
| 6 3 41 53 | Sun | 28·0 | 28·8 | +0·8 | | | |
| 43 23 | Shade | 28·9 | 28·6 | −0·3 | 1·0 | | |
| 44 23 | Sun | 28·6 | 29·2 | +0·6 | 0·9 | | |
| 45 53 | Shade | 29·4 | 29·0 | −0·4 | 1·2 | | |
| 46 53 | Sun | 29·0 | 30·0 | +1·0 | 1·3 | | |
| 48 23 | Shade | 30·0 | 29·9 | −0·1 | 0·7 | | |
| 49 23 | Sun | 29·9 | 30·2 | +0·3 | 0·5 | 0·97 | 5·6 |
| 50 59 | Shade | 30·3 | 30·0 | −0·3 | 0·8 | | |
| 51 59 | Sun | 30·0 | 30·6 | +0·6 | 1·0 | | |
| 53 23 | Shade | 30·7 | 30·2 | −0·5 | 1·1 | | |
| 54 23 | Sun | 30·2 | 30·9 | +0·7 | 1·2 | | |
| 55 53 | Shade | 30·9 | 30·4 | −0·5 | 1·0 | | |
| 56 53 | Sun | 30·4 | 30·8 | +0·2 | | | |

Jan. 13d 1h 0m. Scud and cumuli on E. horizon; sky very milky about the Sun; a very slight breath of wind; dry thermometer 40°·2; wet thermometer 37°·3.

Jan. 13d 1h 39m. Dry thermometer 40°·4; wet thermometer 37°·2.

Feb. 5d 23h 55m. Patches of cirro-strati to SSE., 20° or 25° from the Sun; ground covered with snow; barometer 29·262 in.; dry thermometer 28°·9; wet thermometer 27°·4.

Feb. 6d 0h 20m. Patches of cirro-strati disappeared; sky quite clear. 24m. Highest reading of black bulb thermometer exposed to the Sun since 23h 50m, 63°·8. 28m. Slight breath of wind from SW. 32m. Dry thermometer 32° 6; wet thermometer 30°·9.

Feb. 6d 1h 10m. Slight wind. 19m. Dry thermometer 34°·9; wet thermometer 32°·9.

Feb. 6d 1h 51m. Patches of cirro-strati to SW., about 18° from the Sun; they disappeared at 55m. 59m. Dry thermometer 35°·2; wet thermometer 33°·2.

Feb. 6d 2h 44. Sky quite clear. 50m. Dry thermometer 35°·6; wet thermometer 33°·1.

Feb. 6d 3h 23m. Streaks of cirro-stratus to W. 27m. Streaks of cirrus coming up to about 10° above the Sun.

Feb. 6d 3h 41–58m. Observations made on the roof of the Observatory; some moisture gathers inside the glass case of the actinometer, which may probably affect the observations; at 55m the Sun getting behind trees.

## ACTINOMETER.

| Makerstoun Mean Time of First Reading. | In Sun or Shade. | Observation. Begun. | Observation. Ended. | Change in 60s. | Effect of Sun. | Mean of Group. | Sun's Altitude. |
|---|---|---|---|---|---|---|---|
| d. h. m. s. | | Sc. div. | Sc. div. | Sc. div. | Sc. div. | Sc. div. | ° |
| **SEPTEMBER 9, 1844.** | | | | | | | |
| 9 18 58 12 | Sun | 17·2 | 19·8 | +2·6 | | | |
| 59 42 | Shade | 19·7 | 19·3 | −0·4 | 2·9 | | |
| 19 0 42 | Sun | 19·3 | 21·8 | +2·5 | 3·0 | | |
| 2 12 | Shade | 21·8 | 21·3 | −0·5 | 2·9 | | |
| 3 12 | Sun | 21·3 | 23·7 | +2·4 | 3·0 | 2·89 | 13·5 |
| 4 42 | Shade | 23·6 | 23·0 | −0·6 | 2·9 | | |
| 5 42 | Sun | 23·0 | 25·2 | +2·2 | 2·7 | | |
| 7 12 | Shade | 25·2 | 24·7 | −0·5 | 2·8 | | |
| 8 12 | Sun | 24·7 | 27·0 | +2·3 | | | |
| 9 19 34 12 | Sun | 27·6 | 29·7 | +2·1 | | | |
| 35 42 | Shade | 29·7 | 29·1 | −0·6 | 2·4 | | |
| 36 42 | Sun | 29·1 | 30·7 | +1·6 | 2·2 | 2·13 | 18·0 |
| 38 12 | Shade | 30·7 | 30·1 | −0·6 | 1·8 | | |
| 39 12 | Sun | 30·1 | 30·8 | +0·7 | | | |

| Makerstoun Mean Time of First Reading. | In Sun or Shade. | Observation. Begun. | Observation. Ended. | Change in 60s. | Effect of Sun. | Mean of Group. | Sun's Altitude. |
|---|---|---|---|---|---|---|---|
| d. h. m. s. | | Sc. div. | Sc. div. | Sc. div. | Sc. div. | Sc. div. | ° |
| **SEPTEMBER 9, 1844.** | | | | | | | |
| 9 19 53 22 | Sun | 43·0 | 46·1 | +3·1 | | | |
| 54 42 | Shade | 46·1 | 45·8 | −0·3 | 3·4 | | |
| 55 42 | Sun | 45·8 | 48·9 | +3·1 | 3·4 | | |
| 57 12 | Shade | 49·0 | 48·7 | −0·3 | 3·4 | | |
| 58 12 | Sun | 48·7 | 51·8 | +3·1 | 3·6 | 3·56 | 20·9 |
| 59 42 | Shade | 51·8 | 51·1 | −0·7 | 3·8 | | |
| 9 20 0 42 | Sun | 51·1 | 54·3 | +3·2 | 3·8 | | |
| 2 12 | Shade | 54·3 | 53·9 | −0·4 | 3·5 | | |
| 3 12 | Sun | 53·9 | 56·9 | +3·0 | | | |
| 9 22 15 12 | Sun | 46·8 | 51·7 | +4·9 | | | |
| 16 42 | Shade | 51·2 | 49·8 | −1·4 | 5·9 | | |
| 17 42 | Sun | 49·8 | 53·9 | +4·1 | 5·6 | | |
| 19 12 | Shade | 53·7 | 52·1 | −1·6 | 6·0 | | |
| 20 12 | Sun | 52·1 | 56·8 | +4·7 | 5·9 | 5·69 | 35·8 |
| 21 42 | Shade | 56·7 | 55·8 | −0·9 | 5·6 | | |
| 22 42 | Sun | 55·8 | 60·4 | +4·6 | 5·3 | | |
| 24 12 | Shade | 60·2 | 59·6 | −0·6 | 5·5 | | |
| 25 12 | Sun | 59·6 | 64·8 | +5·2 | | | |

Sept. 9d 18h 51m. A few streaks of cirro-strati to S.; sky rather milky to E. 19h 5m. Patches of scud forming to W.

Sept. 9d 19h 34m. Much scud forming to W., moving from about W.; clear near the Sun. 39m. Scud approaching the Sun; observations bad; dry thermometer 52°·8; wet thermometer 49°·0.

Sept. 9d 19h 53m. The scud has completely passed over the Sun, or has evaporated; patches on N. and S. horizon. 58m. Dry thermometer 53°·3; wet thermometer 49°·2.

Sept. 9d 22h 15m. Scud around but not near the Sun. 20m. Dry thermometer 57°·7; wet thermometer 51°·2. 22m. Patches of scud coming near the Sun. 23m. A small patch very near the Sun, and dissipating. 26m. Scud within 3° of the Sun. This cannot be considered a very good set of observations.

## ADDITIONAL METEOROLOGICAL NOTES.

1844.

| | d. | h. | m. | |
|---|---|---|---|---|
| Jan. | 4 | 2 | 7. | The clouds have broken up about the zenith into watery-looking woolly cirro-stratus and thin milky haze, the horizon being still covered with dense clouds, and the sun quite obscured. About 60° of a remarkable halo (or iris) is visible; its appearance is between that of a rainbow and a coloured solar halo; its centre at or very near the zenith, and the radius somewhat greater than that of an ordinary halo, perhaps 25°; the brightest portion being between the zenith and the sun's place. This was seen for about $2^m$ or $3^m$, when it disappeared, the clouds having become thicker in that part of the sky. Just as it disappeared, another became visible to the South at an altitude of about 35°, its convexity being turned in the same direction as that of the other; as only a small portion of it was visible, no estimation could be made of its radius; it was seen in an opening in the clouds similar to the first, and lasted about $1^m$. During the whole time a bright elongated spot was in the NNE. at an altitude of 7° or 8°, like the sun's light struggling through a cloud; it disappeared about the same time as the second halo. |
| Feb. | 20 | 21 | . | A flock of wild geese seen flying towards SW. |
| | 23 | 1 | . | Sea-gulls seen flying towards the East. |
| Mar. | 4 | 18 | 6. | A meteor, somewhat brighter than Venus, burst near the star ζ Leonis; its course was in a line with Spica and ζ Leonis; only a few degrees of it were seen. |
| | 13 | 6 | . | Flocks of wild geese and gulls flying towards the East. |
| | 16–19 | | . | Several gulls seen about this time. |
| | 22 | 7 | . | A bat seen this evening. |
| Apr. | 6 | | . | Large flocks of sea-gulls seen near the Observatory. |
| | 11 | 14 | 6—10. | Several shooting-stars seen; one moved from Benetnasch past Mizar; another from near the zenith towards the South; another from near Altair towards the South; another moved westward between ε Bootis, Mirach, and Alphecca; faint flashes of lightning, supposed to have been seen to SE. The sky was watched till $15^h$; no more shooting-stars or lightning were seen. The latter is doubtful, as the stars twinkle much. $16^h$. A shooting-star moved from near Cassiopeia towards the East. |
| | 17 | 7 | . | Woolly, mottled, and cirro-cumulous cirri; mottled-edged and clearly-defined cirro-strati detached from each other; the woolly cirri, in large masses, radiating and moving from about S. by W., the cirrous edges being turned upwards; some very small patches of loose scud rising on SE. horizon, and moving from SW. (?); hazy to E.; cirro-strati considerably lower than the cirri. $8^h$. Nearly as before; sheets of cirro-strati nearly cover the sky; long strings of cirri; a few patches of scud moving from about SW. |
| May | 21 | 6 | . | Fine cirri; cirro-cumulous cirro-strati dropping in ragged fragments to SE.; cumuli and cumulo-strati; scud on SE. horizon; the ragged patches of cirro-cumuli are finely-rounded cumuli on the tops, and only ragged below; solar halo. |
| July | 18 | 4—7. | | $4^h$ $0^m$. Huge piles of cumuli and cumulo-strati reaching almost round the horizon, and rising to 30° altitude; some of them with cirrous tops; sky milky. Thunder first heard at $4^h$ $49^m$ to NNW.; two other peals in about $2^m$ after, rather faint. $55^m$. Lightning to NNW. at an altitude of 6°, the thunder heard in $14\frac{1}{2}^s$ after the flash; the flash had the appearance, to one observer, of streaks diverging from a ball, and, to another observer, of streaks meeting in a ball. $57^m$. A streak of lightning farther West, followed by thunder in $21^s$. $5^h$ $0^m$. Dark scud, nimbi; cumulo-strati, cirro-strati, cirrous haze; black, with rain to NW.; ragged patches of scud below, moving from various points from W., round by N. to E. $24^m$. Thunder continuing. $34^m$. Thunder in $5^s$ after lightning. $50^m$. Thunder to SW. $54^m$. Thunder to SSW., $30^s$ after lightning. $6^h$ $0^m$. Patches of loose scud moving from WNW., a few to S. moving from Eastward; a nearly homogeneous mass of dense cirro-stratous clouds above; thunder to SW.; the clouds have almost all lost the cumulous form; a range of small masses of cumuli to NE., where there is a patch of sky; rain$^{2-4}$ since $5^h$. $6^h$ $1$—$2^m$. A peal of thunder to SW., which lasted $25^s$, commencing softly, then bursting into irregular heavy rolls, and going off softly. $6^h$ $17^m$. Lightning to S. by E., near the horizon; thunder in $29^s$. $6^h$ $40^m$. Slight peal to W.; large piles of cumuli, with level bases on horizon from N. to NE.; |

## ADDITIONAL METEOROLOGICAL NOTES.

1844.

d. h. m.

inky black to S.; scud, with ragged patches hanging beneath; patches of green sky. The rolls of thunder have generally commenced softly, then burst, and, finally, died away softly.

Aug. 8 11 20 and 30. Meteors shot from near $\eta$ Ursæ Majoris to W. point of horizon.

9 12 Shooting-stars seen moving towards the N.; a flash of lightning (?) seen about $12^h$ $30^m$.

9 14 8—10. Many meteors were seen at this time towards the S.; about 10 or 12 being seen in $2^m$, only the Southern portion of the sky was seen by the observer, so that there were probably many more in other parts of the sky; most of those seen at this time were very faint.

s.

14 10 47. A meteor to SE.; direction of motion N. to S.; magnitude 2.

11 31. ..... ..... S.; ..... NE. to SW.; ..... 1.

13 51. ..... SE., near the horizon.

14 19. Two meteors seen; one to SW.; the other about 5° above Jupiter, moving from NE. to SW., leaving a train of sparks; magnitude 1·2.

15 41. A meteor to S.; direction of motion NE. to SW.; magnitude 3.

14 16 21. ..... passed through Delphinus; magnitude 3.

17 26. ..... near the zenith, direction of motion NW. to SE.; faint.

18 43. ..... to SW. ..... NE. to SW.

19 4. ..... to S. ..... N. to S.

19 38. ..... WSW. ..... magnitude 3.

20 51. ..... W., altitude 45° ..... E. by N. to W. by S.; magnitude 1, leaving a train.

In the previous observations, the observer attended exclusively to the portion of the sky visible from the door of the observatory (towards the S.); he afterwards removed to the W. end of the observatory, and then had a view of the N., W., and S.

14 23 26. A meteor to WSW.; altitude 30°; direction of motion, ENE. to WSW.; magnitude 2.

24 1. ..... to NW.; ..... ESE. to WNW.; ..... 3.

24 31. ..... to NW.; ..... 2.

25 31. ..... in zenith; ..... S. to N. ..... 3.

29 26. ..... in W., near horizon; ..... ENE. to WSW.; ..... 2.

34 24. ..... in zenith; ..... E. to W.; ..... 1, leaving a train.

37 32. ..... in NNW., altitude 30°; ..... S. by E. to N. by W.; ..... 2.

43 16. ..... in SW., altitude 20°–25° ..... NE. to SW.; ..... 2.

The sky was for some time previous to and after this in an unfavourable state for observations of meteors, as thin clouds were passing over, sometimes obscuring half of the sky.

45 24. A meteor to NW., altitude 85°; direction of motion E. by N. to W. by S.; magnitude 3.

48 53. ..... N. ..... 2·3.

49 46. ..... N., altitude 40°; ..... SSE. to NNW. ..... 2·3.

51 56. ..... NW., altitude 75°; ..... SE. to NW.

The observations of meteors were discontinued for a short time, the observer being engaged making the hourly observation; on his return at $15^h$ $5^m$ the sky was tolerably clear.

15 5 6. A meteor in zenith; direction of motion E. by S. to W. by N.; magnitude 3.

6 41. ..... from 3° N. of $\alpha$ Cygni towards WSW.; ..... 2.

9 31. ..... ..... 2° S. of Capella ..... ENE.; ..... 2.

14 33. ..... ..... 4° S. of Capella ..... E. by N.;

16 46. ..... ... .. NW. altitude 45° ..... NW.; ..... 2.

## ADDITIONAL METEOROLOGICAL NOTES.

1844.

| | d. | h. | m. | s. | |
|---|---|---|---|---|---|
| Aug. | 9 | 15 | 17 | 59. | A meteor from N. by E., altitude 30° towards NNE.; magnitude 1·2. |
| | | | 18 | 51. | ..... ..... SSW., ..... 15° ..... SW. by S.; ..... 2. |
| | | | 20 | 36. | ..... ..... SE. ..... SSE.; ..... 1. |
| | | | 22 | 11. | Two meteors from S. by W.; altitude 30° towards SW.; magnitudes 2 and 3. |
| | | | 25 | 21. | A meteor from 10° S. of α Lyræ towards W. by S.; ..... 1. |
| | | | 26 | 5. | ..... to SW., moving ..... SW.; ..... 3. |
| | | | 29 | 53. | A meteor of the brightness of Jupiter moved from 7° W. of Benetnasch towards SW.; the line of motion making an angle of 60° with the W. horizon. |
| | | | 38 | 37. | A meteor to SE. by E.; direction of motion N. by W. to S. by E.; magnitude 2. |
| | | | 50 | 14. | ..... E. moving almost due E.; magnitude 1. |
| | | | | | The twilight now became rather too strong for seeing any except very bright meteors. |
| | | | | | About $14^h$ $30^m$ there were appearances to NW. somewhat like Aurora; the magnets were slightly disturbed. |
| | 12 | 12 | 8—20. | | 4 meteors were seen to Northwards, and 1 to E.; clouds covering about half of the sky. |
| | 15 | 13 | 5—10. | | 4 meteors seen to NW. |
| | | 13 | 14 | 35. | A meteor seen to NW., altitude 45°; direction of motion SE. to NW.; magnitude 2·3. |
| | | | 17 | 50. | ..... SE. by E., altitude 45°; direction of motion NNW. to SSE. |
| | | | 20 | 40. | ..... N. by E., ..... 30°; ..... SSW. to NNE.; magnitude 3. |
| | | | 23 | 35. | ..... SSW., ..... 25°; ..... NNE. to SSW. |
| | | | 27 | 6. | ..... in zenith; ..... SSE. to NNW.; magnitude 1. |
| | | | 29 | 58. | ..... close to Capella; ..... SW. to NE.; magnitude 3. |
| | | | 30 | 52. | ..... to N. altitude 50°; ..... NW. to SE.; ..... 2. |
| | | | | | The sky became cloudy after this. |
| Sept. | 7 | 7 | 10—15. | | Thunder first heard to SSW., faint. $25^m$. Several flashes of lightning to SSW.; altitude of flash 1°; interval between flashes and thunder from $8^s$ to $16^s$. 26–$28^m$. Several vivid thunder-*bolts*, apparently terminating in balls; one like a cima-reversa of beads; a flash about every $45^s$. $30^m$. Vivid bolt from horizon to 2° altitude at SSW. At this time thick scud from S. by W. $32^m$. Faint flash, interval till peal $38^s$. $33^m$. Splendidly twisted bolt, interval till thunder $38^s$. All the flashes and bolts seen on exactly the same point of horizon, SSW. $34\frac{1}{2}^m$. A flash from horizon to 4° altitude; it moved upwards like a straight bar; thunder in strange interrupted rumblings. $36^m$. Two *twisted* bolts 4° separate, interval till thunder $22^s$; before one of the peals a sound (*Scottice*, sugh) like that of a distant waterfall. $36^m$. Vivid flash, interval till thunder $35^s$. $37\frac{1}{2}^m$. Vivid flash; loudest peal yet heard, interval $25^s$; the rumbling of the thunder continued $22^s$. $38\frac{1}{2}^m$. A very vivid flash, interval till thunder $15^s$. $39\frac{1}{2}^m$. A very brilliant flash like a dotted rod, running up *two* or *three* times in rapid succession from the horizon; duration of the whole flashes about $1^s$. $40^m$. Three distinct flashes in one of great brilliancy. The flashes are now very frequent and brilliant. $42\frac{1}{2}^m$. One with interval till thunder of about $18^s$. Drops of rain. $43^m$. Three or four very vivid flashes, interval till thunder about $16^s$; these lightnings looked like three bolts rising up vertically, and terminating in a sheet. Flashes very frequent, and a continued rumbling of thunder. Becoming very dark to SSW. $45^m$. Flash, interval till thunder $11^s$. $46^m$. Flash, interval $19^s$. At $46^m$ a flash to SSE., with interval till thunder of $15^s$, and one to SSW., with interval of $8^s$; the lightning to SSW., a very vivid bolt rising about 8°. $47^m$. Flash, interval $18^s$; duration of peal $30^s$. $48^m$. Flash to SW., interval $15^s$; duration of thunder $30^s$. $50^m$. Very vivid flash, interval till thunder $14^s$; duration $41^s$. $50\frac{1}{2}^m$. Flash, interval till thunder $11^s$; duration $30^s$. $51^m$. Very bright flash, interval till thunder $13^s$. $52^m$. Faint flash. $53^m$. A very vivid, almost blinding flash, to S. by W., terminating in a bolt; interval till thunder $5^s$; sharp |

## ADDITIONAL METEOROLOGICAL NOTES.

1844.
d. h. m. s.

report. 55m. Vivid flashes, interval till thunder 13s. 56½m. Flash, interval till thunder 5s; very loud report in zenith, which made the observatory rattle. 58m. Flash, interval till thunder 10s. 59m. Flashes very frequent at this time, intervals till thunder about 11s. 8h 0m. Rain 3. 1m. Flashes, with intervals till thunder of 12—20s. 3m. Intervals 9—20s. Now more to westward. Flash, with interval till thunder of 23s. 6m. *Very* brilliant flash, quite *blinding* for a second or two, nearly overhead, a little to the south; a short sharp report at an interval of 6s; another at an interval of 6s. Rain 6—7. Flashes were seen at the following minutes:— 9m. Thunder in 10s. 10½m. Thunder in 9s. 11m. Thunder in 9s. 12m. Thunder in 9s, and another with thunder in 29s. 14m. Thunder in 22s. 16m. Thunder in 17s. 17m. Thunder in 6s. 19m. Thunder in 18s. 21m. Thunder in 40s. No lightning was seen nor thunder heard till 35m, when two or three flashes of sheet-lightning were seen, but no thunder heard. 38m. A faint peal of thunder, 72s after a flash of sheet-lightning. 40m. A vivid flash and bolt to NE., altitude 15°; interval till thunder 10s. 44m. Flash to NE., interval till thunder 71s. 45m. Flash of sheet-lightning to NE.; thunder heard in 32s; faint rumbles were heard at 8s, and at 20s after the flash, but they probably did not belong to it; duration of the last peal 30s. 47m. Two flashes, one to E. by N., and one to NE. 48m. Flash to E. by N. 48½m. Flash to NE.; all sheet-lightning, no thunder heard. 49m. Very small flash like an opening in the clouds to E. by N.; thunder heard in 31s. 50m. Flashes to NNW. and to E. 51m. Splendid sheet of lightning to NE., shewing the contour of the cumulous clouds, which seemed as if edged with silver; thunder heard in 45s. 53m. A flash to NW., the thunder was not heard for 85s, being the greatest interval between the lightning and thunder heard during this storm. 53½m. Flash to NE.; no thunder heard. 56m. Flash to NNE.; thunder heard in 40s. After this time there was a continuous *flickering* of sheet-lightning to E., mostly close to the horizon; no thunder heard; brighter flashes occasionally extending along about 30° of horizon, and diffusing upwards to an altitude of about 30°. A flash at 9h 25m, very bright, diffused over the whole sky. The average number of flashes from about 9h 0m till 9h 30m, was one every 15s. About 9h 20m clouds covered 6 parts of the sky; dark to NE. 9h 40m. Sheet-lightning still to E.; more overcast; very black to NE. 10h 5m. Only occasional flashes now seen. The wind rose about 9h 50m. A bright patch on horizon to E. by N.; the rest of the sky very dark. 10h 20m. Rains 4—5. 10h 55m. Two flashes. 11h 40m. Two flashes. 12h 0m. One diffused flash. 12h 10m. Another like the last. 12h 20m. The bright space on the ENE. horizon still continues with marked fluctuations in its intensity, the brightest part varying also in position. It has been so continuous, that it seems doubtful whether it is electric, or merely the reflection of some great fire. The brightest part moves through 4°, and is sometimes nearly spherical. The storm was watched throughout by two observers, B and W.

*Note.*—The thunder commenced to SSW., passed by the W. of the zenith to NE., and went off finally to E. This storm differs considerably from any observed here previously; although there were large piles of cauliflower cumuli and cumulo-strati with scud throughout the day, yet there was none of that tormented appearance which the clouds generally assume previously to and during a thunder-storm. The scud seemed, as long as it could be observed, to move nearly from the same quarter, S., or S. by W. The bolts of lightning seemed on every occasion to move nearly vertically and from below, upwards; in one instance, the bolt took the form of the cima reversa, and, like many of the others, seemed formed of a series of beads; some terminated in large balls enveloped in sheet lightning. Many of the flashes were so vivid, as to render sight difficult for some seconds. The rumbling of the thunder was often very irregular, having several breaks and starts, the sound being very various, from that of a distant waterfall to the sharp brattle of a railway-carriage starting.

Sept. 26 13. Woolly cirro-stratus, which seems moving rapidly towards the moon, but which never arrives at it.

14. As before, the clouds in the same positions; one band of cirro-stratus reaches from S. to about 6° altitude above W. Another band from S. to W. of meridian continues of the same magnitude as last hour, and seems moving rapidly towards the meridian, yet never attains it. Another band to E., rising to an altitude of 10° above ESE. These bands lie in a Southerly direction, and the positions noted are nearly as last hour.

## ADDITIONAL METEOROLOGICAL NOTES.

1844.

| d. | h. | m. | s. | |
|---|---|---|---|---|
| Sept. 26 | 15. | | | The bands to E. and W. more broken than before, the central one, now completely on the meridian, seeming to form about 10° to the W. of it, and to dissolve about 10° to the E. of it. |
| | 16. | | | The central band has now disappeared, those to the E. and W. still remain. |
| | | | | When first observed, the moon was to the E. of the meridian, and the central band, which lay in a southerly and northerly direction, seemed moving with considerable rapidity from W. to E., but never progressed, retaining almost exactly the same form and position; at last the moon attained the band, and passed behind it, a fine lunar corona being produced by the cloud. Ultimately the moon passed to the W. of the cloud, the band having moved perhaps 15° more easterly in the course of three hours, and seeming during the whole period to *flow* from W. to E. |
| Oct. 3 | 8 | 57 | 30. | A meteor as bright as a star of the first magnitude moved from S., altitude 20° towards S. ½ W. |
| Oct. 7 | 10 | 56. | | A meteor started from 1° below β Tauri, moving parallel to it and α Tauri through about 25°; the meteor left a train of sparks. Two or three meteors were seen afterwards, one of them moving across the zenith due W. $11^h$ $35^m$. A meteor moved from below β Tauri towards a point between Aldebaran and Betelgeux. |
| Nov. 7 | 10 | 50. | | A bright meteor moved from about 4° E. of Jupiter towards the S by W. |
| Nov. 12 | 11 | 4—14. | | Meteors looked for but none seen; sky partially covered with clouds. |
| Nov. 13 | 7 | 10—20. | | Meteors looked for in the varying portions of sky but none seen. |
| | 10 | 6. | | A meteor to W by N. moved vertically downwards from altitude 45° to 35°; the sky was watched from $5^m$ till $15^m$ but no other meteors were seen. |
| | 12 | 5—20. | | Sky clouded 8·0; meteors looked for but none seen; shower at $20^m$. |
| | 13 | 5. | | A meteor to SW., altitude 30°, moving towards SW. |
| | 13 | 11. | | A meteor between Taurus and Orion moving towards SSE. |
| | 13 | 14 | 40. | A meteor moving through Cygnus towards NW. |
| | 13 | 27. | | A meteor to N., altitude 20°, moving westward nearly horizontally. |
| | 13 | 33. | | ……SE.,…… 25°, …… towards WSW. |
| | 13 | 34. | | ……from 4° W. of ξ Ursæ Majoris, moving towards N by E. |
| | 13 | 36 | 20. | ……to NNW., altitude 35°, moving towards NNW; clouds to W. |
| | 13 | 39. | | …… S., …… 25°, …… SE. |
| | 13 | 40. | | …… ENE., …… 15°, …… NE.; sky clouded 8·0; sky to NE. |
| | 14 | 8. | | Pretty clear to N. |
| | 14 | 13 | 25. | A meteor to ENE., altitude 45°, moving towards ENE. |
| | 14 | 15 | 20. | …… N., …… 35°, …… N by E; magnitude 2. |
| | 14 | 30. | | ……between Aldebaran and α Orionis, moving towards W by S.; cloudy to N. and round the horizon. |
| | 14 | 36. | | A meteor passed through Orion towards the SE.; clear to S. $42^m$. Clouds coming on. |
| | 17 | 5. | | Sky clouded 6·0, chiefly to W.; clear to NE. 15—$30^m$. Most of the sky clear. |
| | 17 | 12. | | A meteor to NE., altitude 30°, moving towards NE. |
| | | 19. | | …… NNW. |
| | | 22. | | …… NE., altitude 40°, moving towards ENE. |
| | | 25. | | …… NNW., …… 20°, …… NW. |
| | | 27. | | …… NW., …… 30°, …… NNW. |
| | 17 | 35. | | Sky becoming overcast. |
| Nov. 14 | 9 | 34. | | A meteor passed from 1° N. of α Andromedæ to 1° S. of β Pegasi; magnitude 1·2. |
| | | 42. | | ……3° W. of α Draconis towards the head of Draco. |
| | | 46. | | …… to ESE., altitude 15°, moving towards SE.; faint. |
| | | 56. | | …… from 3° S. of α Andromedæ towards SW. |
| | | | | Most of the meteors seen were of about the third magnitude. |

## ADDITIONAL METEOROLOGICAL NOTES.

1844.

| d. | h. | m. | |
|---|---|---|---|
| Nov. 22 | 7 | 45–50. | Thin cirrous clouds over the Moon, forming a whitish corona of two or three rings, the diameter of the greatest being about 1°; below this a thicker watery-like cirrous cloud at a short distance from, and on one side of, the Moon; this cloud seems to move, but still keeps at about the same distance from the Moon; it forms a portion of a double corona, which assumes various forms, being at different times elliptical, *boomarang*-shaped, circular, and square; the order of the colours, reckoning from the Moon outwards, is—yellowish, passing into orange, next a dark space, then blue and orange again; the outer side of the inner orange may be 3° to 5° radius, and of the outer orange 4½° to 6½° radius. |
| Nov. 22 | 11. | | Growing patches of scud; woolly, linear, and watery cirri above; the watery-looking cirri appear to *move* but never to *progress*. |
| Nov. 23 | 8 | 5. | A band of nebulous light, like a broad and not very bright pencil of aurora, stretching from N by E. point of horizon to 20° past the zenith, the upper edge of the band being 5° to W. of the zenith; a considerable quantity of clouds over the sky, the band of light being seen through breaks. There are also two or three smaller bands on each side of the broad one. $10^m$. Obscured by clouds. $25^m$. A band still continues in nearly the same position, estimated to be 6° broad, and consisting of six or eight separate streaks lying in juxtaposition; separately having a considerable resemblance to the cometary beam of aurora seen on March 29, 1843. (See Volume of Observations for 1843, page 61.) The band can be traced from the horizon at N. 13½° E. to S. 44° W., altitude 28°; at the centre of the arch, azimuth W. 10° N., the altitude is 59°. $36^m$. The clouds clearing off a little to S.; the band is observed to stretch to within 5° of the horizon, being there cut off from view by a band of cirro-stratus; the azimuths of the extremities are N. 8° E. and S. 13° W.; altitude of summit, upper edge 80°, lower edge 48°, the measurements rough. $40^m$. A meteor shot from $\beta$ Cygni, at the summit of the arch, towards the S. in the direction of the band; N. extremity obscured by clouds; S. extremity increased in intensity and breadth; the light dullish white; a very bright portion to S., altitude 24°. $45^m$. A streak to the E. of the arch, springing from the S. extremity, has newly appeared, and ultimately extends across the zenith. $50^m$. The breadth of the band at the summit is 40°, extending from altitude 50° to zenith; the structure as of a series of fibres more or less dense, 8° or 10° of it being nearly uniform. $55^m$. Another measurement of the breadth of the arch at the summit gives the breadth 51°, the lower altitude being 39° and the upper 90°; no error in the previous measurement, the arch having extended farther W. $9^h$ $0^m$. Sky obscured by clouds. $9^h$ $30^m$. Sky clear; the streaks at first scarcely visible, afterwards observed faint in the zenith. A streak observed, very fine and faint, in the same direction as before described, its length about 10°; gradually creeping up, increasing in breadth and intensity, and afterwards extending over the zenith; three or four afterwards forming as before. It may be remarked, that the atmosphere seems very humid, a dull milky light being around the Moon, while patches of scud are continually *forming;* at one time lunar beams observed, caused by the rays shining through holes in the clouds; but the Moon is completely to the E. of the bands observed and can have no connection with them.<br>It is very difficult to determine whether these bands are cirrous streaks or not; but their well defined edges, varying breadth and brightness, and great extent of space, leave upon the observers the impression that this is a phenomenon of a very different kind. It is certainly very strange that the streaks should re-form in exactly the same position. The Moon being nearly full (and at about $8^h$ $50^m$ having an altitude of about 35°, and being 50° to E. of meridian), rendered it more difficult to watch the varying phases of this phenomenon. No upper range of cirrous clouds was observed either to E. or W. of this band, which was evidently above the cirro-cumuli and scud. Observers, B. W. and H.<br>There was a magnetic disturbance which finished immediately before this phenomenon was noticed. |
| Nov. 24 | 8. | | Streaks of cirrus in different parts of the sky, all lying N. and S.; some of them can be traced throughout the whole extent; they have a considerable resemblance to the appearance observed on the preceding evening but much less distinct. |

## DATES OF FLOWERING OF PLANTS, &c.

1844.

Jan. 28. Galanthus nivalis, in flower.

March 4. Draba verna, in flower.
10. Fragaria vesca, in flower.
17. Agraphis nutans, leaves above ground.
— Mercurialis perennis, beginning to flower.
— Cratægus Oxyacantha, in leaf.
22. A bat seen.
23. Buxus sempervirens, in flower.
— Ribes Grossularia, in leaf.
27. Mercurialis perennis, in flower.
29. Ranunculus Ficaria, in flower.
— A tortoise-shell butterfly (Vanessa urticæ) seen.
30. Primula acaulis, in flower.

April 1. Pulmonaria officinalis, in flower.
— Æsculus Hippocastanum, in leaf.
— Syringa vulgaris, in leaf.
3. Ulmus montana, in flower.
7.? Larix Europæa, in leaf.
13. Pyrus aucuparia, in leaf.
14. Viola canina, in flower.
— Myosotis arvensis, in flower.
15. Ulmus montana, in leaf.
16. Alnus glutinosa, in flower.
— A swallow (Hirundo rustica?) seen.
17. Saxifraga granulata, in flower.
— Myosotis palustris (?), in flower.
18. Fraxinus excelsior, in flower.
— Platanus occidentalis, in leaf.
— Betula alba, in leaf.
— Chrysosplenium oppositifolium, in flower.
19. Alnus glutinosa, in leaf.
— Ulmus montana, green seed-vessels very distinct.
— Cerasus Padus, in leaf; must have been in leaf by the 14th.
20. Prunus spinosa, in leaf and flower.
— Helianthemum vulgare, in flower.
— Galium cruciatum, in flower.
— Primula veris, in flower.
— Ranunculus acris, in flower.

1844.

April 20. Lychnis diurna, in flower.
21. Pyrus communis (cultivated), in full blossom; probably in flower by the 14th.
— A wasp (Vespa vulgaris) seen.
22. Cerasus Padus, in full blossom; probably in flower by the 14th.
24? Agraphis nutans, in flower.
— Caltha palustris, in flower.
25. Juglans regia, in leaf.
— Fagus sylvatica, in leaf.
27. Berberis vulgaris, found well in leaf; probably in leaf by the 22d.
28. Tilia Europæa, in leaf.
— Seeds of Ulmus montana well forward.

May 1. Quercus Robur, in flower.
— Fraxinus excelsior (young tree), in leaf.
3. Erysimum Alliaria, in flower.
— Veronica Chamædrys, in flower.
— Syringa vulgaris, in flower.
— The cuckoo (Cuculus canorus) heard for the first time.
5. Acer Pseudo-platanus, in flower.
7. Fraxinus excelsior (from which flowering noted), in leaf.
8. Cratægus Oxyacantha, in flower.
15. Seed-vessels of Ulmus montana well filled.
18. Juglans regia, in flower.

June 6. Quercus Robur (young tree), only leafed.
8. Fraxinus excelsior (old tree), leafed.
15. Swifts (Cypselus apus?) first seen.
30. Valeriana officinalis, in flower.
— Ligustrum vulgare, in flower.
— Spiræa salicifolia, in flower.

July 13. Tilia Europæa, in flower.

Aug. 1. Ulmus montana, leaves coloured.
17. Fraxinus excelsior, leaves nearly off one tree, and in about a fortnight the greater part of the leaves off the trees.
20. Quercus Robur, leaves coloured.

Oct. 4. Saw a swallow (Hirundo rustica?).

## MAKERSTOUN MEAN TIME OF THE COMMENCEMENT OF MORNING SONG OF BIRDS.

| | d. | h. | m. | | |
|---|---|---|---|---|---|
| April | 15 | 4 | 1 | A.M. | Thrush. |
| | 16 | 3 | 50 | ... | ..... |
| | 17 | 4 | 8 | ... | ..... |
| | 18 | 4 | 2 | ... | ..... |
| | 19 | 3 | 57 | ... | ..... |
| | 20 | 3 | 42 | ... | ..... |
| | 22 | 3 | 41 | ... | ..... |
| | 24 | 3 | 31 | ... | ..... |
| | 26 | 3 | 19 | ... | ..... |
| | 27 | 3 | 20 | ... | ..... |
| | 29 | 3 | 3 | ... | Lark. |
| | | 3 | 15 | ... | Thrush. |
| | 30 | 3 | 4 | ... | Lark. |
| | | 3 | 6 | ... | Thrush. |
| May | 1 | 3 | 3 | ... | Lark. |
| | 2 | 2 | 44 | ... | Lark. |
| | | 2 | 57 | ... | Thrush. |
| | 3 | 2 | 33 | ... | Lark. |
| | | 3 | 0 | ... | Thrush. |
| | 4 | 3 | 4 | ... | Lark. |
| | 6 | 2 | 44 | ... | Lark. |
| | | 3 | 4 | ... | Thrush. |
| | 7 | 2 | 40 | ... | Lark. |
| | | 3 | 4 | ... | Thrush. |
| | 8 | 2 | 30 | ... | Lark. |
| | | 2 | 51 | ... | Thrush. |
| | 9 | 2 | 15 | ... | Lark. |
| | | 2 | 41 | ... | Thrush. |
| | 10 | 2 | 27 | ... | Lark. |
| | | 2 | 55 | ... | Thrush. |
| | 11 | 2 | 32 | ... | Lark. |
| | | 3 | 1 | ... | Thrush. |
| | 13 | 1 | 58 | ... | Lark. |
| | | 2 | 36 | ... | Thrush. |
| | 14 | 2 | 18 | ... | Lark. |
| | | 2 | 45 | ... | Thrush. |
| | 15 | 1 | 49 | ... | Lark. |
| | | 2 | 37 | ... | Thrush. |
| | 16 | 1 | 58 | ... | Lark. |
| | | 2 | 34 | ... | Thrush. |
| | 17 | 2 | 15 | ... | Lark. |
| | | 2 | 45 | ... | Thrush. |
| | 18 | 1 | 58 | ... | Lark. |
| | | 2 | 30 | ... | Thrush. |
| | 20 | 2 | 35 | ... | Lark. |
| | | 2 | 40 | ... | Thrush. |
| | 21 | 2 | 50 | ... | Thrush. |
| | 22 | 2 | 19 | ... | Lark. |
| | | 2 | 35 | ... | Thrush. |
| | 23 | 1 | 30 | ... | Lark. |
| | | 2 | 15 | ... | Thrush. |
| | 24 | 1 | 50 | ... | Lark. |
| | | 2 | 20 | ... | Thrush. |
| | 27 | 2 | 10 | ... | Lark. |

| | d. | h. | m. | | |
|---|---|---|---|---|---|
| May | 27 | 2 | 27 | A.M. | Thrush. |
| | 28 | 1 | 43 | ... | Lark. |
| | | 2 | 22 | ... | Thrush. |
| | 29 | 1 | 42 | ... | Lark. |
| | | 2 | 20 | ... | Thrush. |
| | 30 | 1 | 40 | ... | Lark. |
| | | 2 | 25 | ... | Thrush. |
| | 31 | 1 | 51 | ... | Lark. |
| | | 2 | 17 | ... | Thrush. |
| June | 1 | 1 | 59 | ... | Lark. |
| | | 2 | 14 | ... | Thrush. |
| | 3 | 1 | 32 | ... | Lark. |
| | | 2 | 1 | ... | Thrush. |
| | 4 | 1 | 35 | ... | Lark. |
| | | 2 | 3 | ... | Thrush. |
| | 5 | 1 | 47 | ... | Lark. |
| | | 2 | 3 | ... | Thrush. |
| | 6 | 1 | 35 | ... | Lark. |
| | | 2 | 2 | ... | Thrush. |
| | 7 | 1 | 27 | ... | Lark. |
| | | 1 | 59 | ... | Thrush. |
| | 8 | 1 | 30 | ... | Lark. |
| | | 1 | 59 | ... | Thrush. |
| | 10 | 1 | 20 | ... | Lark. |
| | | 1 | 43 | ... | Thrush. |
| | 11 | 1 | 27 | ... | Lark. |
| | | 1 | 38 | ... | Thrush. |
| | 12 | 1 | 56 | ... | Lark. |
| | | 2 | 13 | ... | Thrush. |
| | 13 | 1 | 40 | ... | Lark. |
| | | 1 | 58 | ... | Thrush. |
| | 14 | 1 | 58 | ... | Thrush. |
| | 15 | 1 | 53 | ... | Thrush. |
| | 17 | 1 | 20 | ... | Lark. |
| | | 1 | 43 | ... | Thrush. |
| | 18 | 1 | 56 | ... | Lark. |
| | | 2 | 12 | ... | Thrush. |
| | 19 | 2 | 4 | ... | Lark. |
| | | 2 | 15 | ... | Thrush. |
| | 21 | 1 | 50 | ... | Lark. |
| | | 2 | 7 | ... | Thrush. |
| | 22 | 1 | 27 | ... | Lark. |
| | | 1 | 41 | ... | Thrush. |
| | 24 | 1 | 23 | ... | Lark. |
| | | 1 | 45 | ... | Thrush. |
| | 25 | 2 | 7 | ... | Lark. |
| | | 2 | 14 | ... | Thrush. |
| | 26 | 1 | 53 | ... | Lark. |
| | | 2 | 12 | ... | Thrush. |
| | 27 | 1 | 42 | ... | Lark. |
| | | 2 | 6 | ... | Thrush. |
| | 28 | 1 | 59 | ... | Lark. |
| | | 2 | 5 | ... | Thrush. |
| | 29 | 2 | 0 | ... | Lark. |

| | d. | h. | m. | | |
|---|---|---|---|---|---|
| June | 29 | 2 | 24 | A.M. | Thrush. |
| July | 1 | 2 | 0 | ... | Thrush. |
| | 2 | 1 | 40 | ... | Lark. |
| | | 2 | 7 | ... | Thrush. |
| | 3 | 1 | 50 | ... | Lark. |
| | | 2 | 19 | ... | Thrush. |
| | 4 | 1 | 55 | ... | Lark. |
| | | 2 | 20 | ... | Thrush. |
| | 5 | 1 | 48 | ... | Lark. |
| | | 2 | 12 | ... | Thrush. |
| | 6 | 1 | 45 | ... | Lark. |
| | | 2 | 25 | ... | Thrush. |
| | 8 | 2 | 13 | ... | Lark. |
| | | 2 | 25 | ... | Thrush. |
| | 9 | 2 | 20? | ... | Lark. |
| | | 2 | 36 | ... | Thrush. |
| | 10 | 2 | 35 | ... | Thrush. |
| | 11 | 2 | 0 | ... | Lark. |
| | | 2 | 0 | ... | Thrush. |
| | 12 | 2 | 40 | ... | Thrush. |
| | 15 | 2 | 55 | ... | Lark. |
| | | 2 | 55 | ... | Thrush. |

---

| | | | | | |
|---|---|---|---|---|---|
| May | 2 | 2 | 55 | ... | Cock crow. |
| | 3 | 2 | 44 | ... | Lambs bleating. |
| | | 2 | 49 | ... | Cuckoo. |
| | | 3 | 5 | ... | Pheasant. |
| | 4 | 2 | 44 | ... | Cock crow. |
| | | 2 | 45 | ... | Lambs bleating. |
| | | 3 | 6 | ... | Pheasant. |
| | 6 | 2 | 44 | ... | Lambs bleating. |
| | | | 58 | ... | Sandpiper. |
| | 8 | 2 | 40 | ... | Cock crow. |
| | | | 42 | ... | Lambs bleat. |
| | 9 | 2 | 24 | ... | Lambs. |
| | | | 40 | ... | Heron. |
| | 10 | 2 | 8 | ... | Sandpiper. |
| | | 2 | 22 | ... | Lambs. |
| | 11 | 2 | 30 | ... | Lambs. |
| | | | 38 | ... | Cock. |
| | 14 | 2 | 28 | ... | Lambs. |
| | 15 | 1 | 50 | ... | Cock. |
| | | 2 | 30 | ... | Sheep. |
| | | 2 | 30 | ... | Pigeon. |
| | 16 | 1 | 48 | ... | Lambs. |
| | 17 | 1 | 40 | ... | Sheep. |
| | 18 | 1 | 50 | ... | Sheep. |
| | 20 | 2 | 11 | ... | Sandpiper. |
| | 22 | 2 | 35 | ... | Lamb. |
| | | 2 | 30 | ... | Landrail. |
| | 23 | 1 | 45 | ... | Lambs. |
| | 31 | 4 | 4 | ... | Cuckoo. |
| June | 1 | 2 | 3 | ... | Sandpiper. |

## MAKERSTOUN MEAN TIME OF THE COMMENCEMENT OF MORNING SONG OF BIRDS.

| | d. | h. | m. | | |
|---|---|---|---|---|---|
| June | 5 | 1 | 40 | A.M. | Lambs. |
| | 7 | 1 | 35 | ... | Swallow. |
| | 7 | 1 | 42 | ... | Sandpiper. |
| | 10 | 1 | 4 | ... | Sandpiper. |
| | | 1 | 33 | ... | Swallow. |
| | 17 | 1 | 24 | ... | Sandpiper. |
| | 24 | 1 | 0 | ... | Landrail. |
| | 25 | 1 | 45 | ... | Swallow. |
| | | 1 | 55 | ... | Woodpigeon. |
| | 29 | 2 | 20 | ... | Swallow. |
| | 31 | 0 | 15 | ... | Landrail. |
| | | 0 | 20 | ... | Sandpiper. |
| July | 2 | 1 | 32 | ... | Landrail. |
| | | 1 | 50 | ... | Cock. |
| | 3 | 1 | 29 | ... | Swallow. |
| | 4 | 1 | 0 | ... | Landrail. |
| | | 1 | 19 | ... | Cock. |
| | | 1 | 57 | ... | Swallow. |
| | | 11 | 10 | P.M. | Landrail. |
| | | 10 | 10 | ... | Swallow. |
| | 5 | 1 | 58 | A.M. | Swallow. |

| | d. | h. | m. | | |
|---|---|---|---|---|---|
| July | 5 | 2 | 2 | A.M. | Sandpiper. |
| | | 2 | 12 | ... | Woodpigeon. |
| | 8 | 0 | 14 | ... | Landrails. |
| | | 0 | 14 | ... | Swallow. |
| | | 0 | 35 | ... | Wren? |
| | | 2 | 5 | ... | Cock. |
| | 9 | 1 | 51 | ... | Swallow. |
| | 10 | 1 | 22 | ... | Landrail. |
| | | 1 | 55 | ... | Cock. |
| | | 2 | 0 | ... | Swallow. |
| | | 2 | 5 | ... | Woodpigeon. |
| | 11 | 2 | 10 | ... | Swallow. |
| | | 2 | 30 | ... | Landrail. |
| | | 3 | 0 | ... | Lark and Thrush. |
| | 12 | 1 | 50 | ... | Swallows. |
| | 13 | 2 | 5 | ... | Swallow. |
| | | 2 | 55 | ... | Wren. |
| | 15 | 2 | 10 | ... | Swallow. |
| | | 2 | 55 | ... | Blackbird and Lark. |

| | d. | h. | m. | | |
|---|---|---|---|---|---|
| July | 16 | 2 | 0 | A.M. | Landrail. |
| | | 3 | 0 | ... | Wren. |
| | 17 | 3 | 10 | ... | Wren? |
| | | 4 | 10 | ... | Blackbird? |
| | 19 | 3 | 15 | ... | Partridges. |
| | | | 20 | ... | Jackdaw and Woodpigeon. |
| | 20 | 2 | 17 | ... | Swallow. |
| | | | 19 | ... | Cock. |
| | 23 | 2 | 25 | ... | Swallow. |
| | | 3 | 10 | ... | Blackbird and other birds. |
| | 24 | 2 | 15 | ... | Swallow. |
| | | 3 | 0 | ... | Wren and Pigeon. |
| | 26 | 3 | 0 | ... | Swallow. |
| | 29 | 2 | 35 | ... | Swallow. |
| | 30 | 2 | 27 | ... | Swallow. |
| Aug. | 1 | 2 | 35 | ... | Swallow. |

June 5. It may be remarked, generally, that in a minute or two after the first lark is heard, several others are heard; in a minute after the first thrush, many thrushes; in about three minutes thereafter, the blackbird and other birds commence their song. In several instances, it has not been certain whether it was the thrush or the blackbird which was heard first.

July 8. Landrails and swallows throughout the night.

July 13. The wren is now the principal songster in the morning.

July 16, &c. Landrails heard throughout the night.

# ABSTRACTS OF THE RESULTS

OF THE

# MAGNETICAL OBSERVATIONS,

MADE AT THE OBSERVATORY OF

## GENERAL SIR T. M. BRISBANE, BART.,

MAKERSTOUN.

1844.

TABLE I.—Mean Westerly Declination for each Civil Week-Day, Week, and Month, in 1844.

| Civil Day. | Jan. | Feb. | March. | April. | May. | June. | July. | Aug. | Sept. | Oct. | Nov. | Dec. |
|---|---|---|---|---|---|---|---|---|---|---|---|---|
| | 25°. ′ | 25°. ′ | 25°. ′ | 25°. ′ | 25°. ′ | 25°. ′ | 25°. ′ | 25°. ′ | 25°. ′ | 25°. ′ | 25°. ′ | 25°. ′ |
| 1 | 19·78 | 20·31 | 17·76 | 18·11 | 16·84 | 16·30 | 15·92 | 16·66 | [17·35] | 19·16 | 14·78 | [14·97] |
| 2 | 20·89 | 19·80 | 17·64 | 20·22 | 17·59 | [16·66] | 17·01 | 18·10 | 18·10 | 16·49 | 14·75 | 14·26 |
| 3 | 21·14 | 18·15 | [17·35] | 19·08 | 18·10 | 16·70 | 16·28 | 16·00 | 17·33 | 17·01 | [14·70] | 14·40 |
| 4 | 21·06 | [19·44] | 17·07 | 18·67 | 17·66 | 16·88 | 16·42 | [16·90] | 17·49 | 16·70 | 14·95 | 15·33 |
| 5 | 21·24 | 20·50 | 17·08 | 18·05 | [17·82] | 16·92 | 16·91 | 16·55 | 17·62 | 16·00 | 13·77 | 14·10 |
| 6 | 20·98 | 19·73 | 17·43 | 17·24 | 18·53 | 16·80 | 16·07 | 16·57 | 16·74 | [15·88] | 14·80 | 14·57 |
| 7 | [20·83] | 18·18 | 17·85 | [18·17] | 17·49 | 17·01 | [16·74] | 17·50 | 17·45 | 15·06 | 14·37 | 14·57 |
| 8 | 20·29 | 19·59 | 18·33 | 18·05 | 17·53 | 16·03 | 18·03 | 18·16 | [16·99] | 15·32 | 13·91 | [14·53] |
| 9 | 20·32 | 19·88 | 17·73 | 18·04 | 18·28 | [16·64] | 17·01 | 19·03 | 16·50 | 15·18 | 13·78 | 14·49 |
| 10 | 21·07 | 18·64 | [18·01] | 18·99 | 17·95 | 16·43 | 15·98 | 17·23 | 16·90 | 15·19 | [14·15] | 14·73 |
| 11 | 21·53 | [19·31] | 18·06 | 17·70 | 17·29 | 16·52 | 16·48 | [17·74] | 16·74 | 15·27 | 14·33 | 14·72 |
| 12 | 20·51 | 19·31 | 18·70 | 18·68 | [17·51] | 17·07 | 16·24 | 16·90 | 16·59 | 15·40 | 13·92 | 14·38 |
| 13 | 20·68 | 19·34 | 17·39 | 18·40 | 17·54 | 17·33 | 16·77 | 17·67 | 16·89 | [15·07] | 14·61 | 14·70 |
| 14 | [20·86] | 19·08 | 18·32 | [18·48] | 17·36 | 16·78 | [16·43] | 17·48 | 17·01 | 14·48 | 14·63 | 14·65 |
| 15 | 20·61 | 19·71 | 18·05 | 18·11 | 16·63 | 16·73 | 16·69 | 16·83 | [16·93] | 15·56 | 14·80 | [14·42] |
| 16 | 20·64 | 19·23 | 18·21 | 17·75 | 17·68 | [16·92] | 16·19 | 17·22 | 18·35 | 14·51 | 12·67 | 13·99 |
| 17 | 21·17 | 19·60 | [17·97] | 20·24 | 17·73 | 16·22 | 16·24 | 17·08 | 16·26 | 14·93 | [14·24] | 14·51 |
| 18 | 20·89 | [19·15] | 17·91 | 18·10 | 17·36 | 17·26 | 15·78 | [17·19] | 16·48 | 15·76 | 13·97 | 14·27 |
| 19 | 20·63 | 18·64 | 17·68 | 18·15 | [17·49] | 17·23 | 16·22 | 17·32 | 16·83 | 14·77 | 14·74 | 14·46 |
| 20 | 20·06 | 18·63 | 17·67 | 18·54 | 17·79 | 16·38 | 16·19 | 17·51 | 16·25 | [15·61] | 14·63 | 12·61 |
| 21 | [20·61] | 19·11 | 18·07 | [18·19] | 17·47 | 17·01 | [16·00] | 17·18 | 16·80 | 18·16 | 15·08 | 15·48 |
| 22 | 20·77 | 18·69 | 18·36 | 18·24 | 16·90 | 16·19 | 14·91 | 17·12 | [16·63] | 14·60 | 14·33 | [14·13] |
| 23 | 21·04 | 18·56 | 18·30 | 18·10 | 17·84 | [16·25] | 16·72 | 19·46 | 17·34 | 15·45 | 13·38 | 14·27 |
| 24 | 20·25 | 18·33 | [18·01] | 18·03 | 16·89 | 15·80 | 16·21 | 17·62 | 16·58 | 14·29 | [14·51] | 13·90 |
| 25 | 22·83 | [18·13] | 18·18 | 17·25 | 16·55 | 16·48 | 17·12 | [17·76] | 15·98 | 13·50 | 15·07 | 14·05 |
| 26 | 20·25 | 18·52 | 17·88 | 18·26 | [16·68] | 15·64 | 16·66 | 17·17 | 15·27 | 14·31 | 14·65 | 14·23 |
| 27 | 19·01 | 18·17 | 17·29 | 18·64 | 16·17 | 16·38 | 17·19 | 17·15 | 19·60 | [14·66] | 14·57 | 14·14 |
| 28 | [20·10] | 16·50 | 18·41 | [17·60] | 16·48 | 16·47 | [16·92] | 18·04 | 17·52 | 14·49 | 15·86 | 12·88 |
| 29 | 19·92 | 17·15 | 17·72 | 18·00 | 16·18 | 15·94 | 17·23 | 17·23 | [17·82] | 15·11 | 15·06 | [13·30] |
| 30 | 19·30 | | 16·65 | 16·64 | 16·21 | [16·33] | 15·19 | 16·67 | 18·91 | 16·26 | 14·93 | 11·92 |
| 31 | 19·26 | | [18·36] | | 16·98 | | 18·15 | 17·28 | | 15·14 | | 13·85 |
| Mean | 20·60 | 18·93 | 17·84 | 18·28 | 17·30 | 16·58 | 16·51 | 17·36 | 17·10 | 15·49 | 14·47 | 14·21 |

As no observations were made on Sundays, the places which the means for Sundays would have occupied have been filled up by the means of the three preceding and three succeeding days; these means are therefore weekly means, and may be considered as approximate means for the Sundays. They have been used in the summations having reference to the Moon's position, as it was considered that the want of any means on these days would affect the accuracy of the results more seriously than the use of the approximations.

## MEAN DECLINATION AND THE SECULAR CHANGE.

| | |
|---|---|
| *The mean westerly declination for the year* 1844, . . . . . | = 25° 17′·06 |
| The mean westerly declination for the year 1843 (1843, p. 221), . | = 25 22·85 |
| Hence, the value of the *secular change* for the year 1843–4, . . | = − 5·79 |
| The secular change for the year 1842–3 (1843, p. 224), . . . | = − 5·62 |

We may therefore conclude that the yearly diminution of westerly declination was nearly constant from 1842 to 1844, or that the north extremity of the declination needle approached the true north at the average rate of 5′·70 a-year.

## ANNUAL PERIOD.

An examination of the monthly means at the foot of Table I. will shew that though the amount of change from year to year be nearly constant, this is not the case from month to month; on the contrary, the north extremity of the needle at times moves towards the west. It is not very evident, however, from these means, whether the rate or sign of motion has any well-marked relation to the season of the year. In order to render this more apparent, we may separate the variations into two parts; one, consisting of an easterly motion (the north end of the needle being always considered), at the constant rate of 0′·48 a-month, or 5′·70 a-year; the second, of motions which are alternately to the east and to the west of the same mean position,—the latter being evidently the only portion which can have any relation to season. If, then, $n$ be the number of the month from January, and we add the quantity 0′·48 $n$ to each monthly mean, we shall obtain the following quantities:

| Jan. | Feb. | March. | April. | May. | June. | July. | Aug. | Sept. | Oct. | Nov. | Dec. |
|---|---|---|---|---|---|---|---|---|---|---|---|
| 20′·60 | 19′·41 | 18′·80 | 19′·72 | 19′·22 | 18′·98 | 19′·39 | 20′·72 | 20′·94 | 19′·81 | 19′·27 | 19′·49 |

From which it would appear that the westerly declination was a minimum in March and a maximum in September; secondary minima occurring in June and November, and secondary maxima in January and April. The whole range of these means, however, is only 2′·12, and as the effect of 10° of torsion in the suspension thread is 0′·84, it is quite possible that some of these variations may be due to this source of error. Though an examination of the amount of torsion, found at different times in the suspension thread, will shew that the error due to torsion is, in general, small,* yet it will be desirable to destroy accidental errors as much as possible by taking the means of groups; making use, for this purpose, of the mean for December 1843 = 18′·72, and for January 1845 = 19′·85 (both reduced for secular change to January 1844), and noting the mean for each three months as the mean for the middle month, we obtain the following quantities for 1844:—

| Jan. | Feb. | March. | April. | May. | June. | July. | Aug. | Sept. | Oct. | Nov. | Dec. |
|---|---|---|---|---|---|---|---|---|---|---|---|
| 19′·58 | 19′·60 | 19′·31 | 19′·25 | 19′·31 | 19′·20 | 19′·70 | 20′·35 | 20′·49 | 20′·01 | 19′·52 | 19′·57 |

These numbers indicate a distinct annual period, consisting of a principal minimum about May, a principal maximum between August and September, and probably of a secondary minimum in November, and of a secondary maximum between January and February. The variations upon which the latter portion of this result depends are too small to be entitled to much confidence alone; the Observations for 1843 have, accordingly, been discussed anew for the purpose of comparison with this result. In the volume for 1843, the monthly means from 9 daily observations were corrected by quantities obtained from the 24 hourly observations of 1844 (1843, p. 221). Correcting the means for 1843, and for December 1842, by the complete series in 1844 and 1845, we have the following quantities:—

| Dec. | Jan. | Feb. | March. | April. | May. | June. | July. | Aug. | Sept. | Oct. | Nov. | Dec. |
|---|---|---|---|---|---|---|---|---|---|---|---|---|
| 24′·64 | 25′·50 | 24′·91 | 24′·35 | 23′·79 | 23′·51 | 25′·25 | 23′·59 | 22′·33 | 20′·92 | 21′·75 | 19′·09 | 19′·20 |

When these numbers, and the mean for January 1844 (20′·60), are reduced for secular change to January 1843, and means of each three months taken as in the above instance for 1844, we have,

| Jan. | Feb. | March. | April. | May. | June. | July. | Aug. | Sept. | Oct. | Nov. | Dec. |
|---|---|---|---|---|---|---|---|---|---|---|---|
| 25′·02 | 25′·40 | 25′·31 | 25′·32 | 26′·10 | 26′·52 | 26′·60 | 25′·64 | 25′·51 | 24′·91 | 24′·81 | 24′·91 |

From these means for 1843, the principal minimum occurs in November, the principal maximum between June and July; a secondary minimum between March and April, and a secondary maximum in February; the greatest difference in the epochs for the two years is found in the period of the principal maximum, which occurs two months earlier in 1843 than in 1844. This difference may be explained by the gradual destruction of the suspension thread, and the substitution of a new one in June 1843; when this and the small range of the variations are kept in remembrance, the resemblance in the results for the two years will appear considerable.

On taking the mean of the results for the years 1843 and 1844, we have,

| Jan. | Feb. | March. | April. | May. | June. | July. | Aug. | Sept. | Oct. | Nov. | Dec. |
|---|---|---|---|---|---|---|---|---|---|---|---|
| 22′·30 | 22′·50 | 22′·31 | 22′·28 | 22′·70 | 22′·86 | 23′·15 | 23′·00 | 23′·00 | 22′·46 | 22′·16 | 22′·24 |

* See the foot-notes to the Hourly Observations of Magnetometers, and the article *Declinometer* in the Introduction.

Very nearly the same result as may be deduced from these quantities is exhibited by the simple means for *each* of the succeeding years, 1845 and 1846; it is therefore stated with considerable confidence, *that the magnetic declination at Makerstoun has an annual period, consisting of a motion of the north end of the needle towards the west from April till August or September, of an easterly motion from September till the end of November, of a secondary westerly motion from thence till February, and of an easterly motion from thence again till April.*

It should be remarked that this result differs little from what might be at once concluded from the simple monthly means for 1844, and (with the exception of the principal westerly deviation) from the simple monthly means for 1843; in the consideration of the annual period from the means for 1843 (1843, p. 221), the secondary maximum and minimum were overlooked as possibly accidental, which might have been done still but for the strong confirmation of each successive year's observations.

*Differences of the Daily Means from the Monthly Means.*—The following are the means of these differences for each month in 1844:—

| Jan. | Feb. | March. | April. | May. | June. | July. | Aug. | Sept. | Oct. | Nov. | Dec. |
|---|---|---|---|---|---|---|---|---|---|---|---|
| 0′·56 | 0′·72 | 0′·38 | 0′·53 | 0′·53 | 0′·38 | 0′·54 | 0′·52 | 0′·70 | 0′·87 | 0′·49 | 0′·50 |

The apparent law of these values is rendered more regular by taking the means for *each* three months, in the manner already indicated for the monthly means, as the mean for the middle month; these are:—

| Jan. | Feb. | March. | April. | May. | June. | July. | Aug. | Sept. | Oct. | Nov. | Dec. |
|---|---|---|---|---|---|---|---|---|---|---|---|
| 0′·59 | 0′·55 | 0′·54 | 0′·48 | 0′·48 | 0′·48 | 0′·48 | 0′·59 | 0′·70 | 0′·69 | 0′·62 | 0′·52 |

The average differences are therefore a minimum about May, and a maximum about September, a secondary minimum occurring about December, and a secondary maximum about January; the latter are more distinct in the simple means. It is impossible not to remark the coincidence of these epochs with those stated already for the mean westerly declination. The result may be thus generalized:—The average difference of the daily means from the monthly means in 1844 was a minimum when the mean westerly declination was least, and a maximum when it was greatest.

The previous quantities may perhaps be considered as some measure of the amount of disturbances of the daily mean positions in each month of the year, without distinguishing, however, between what we may term consecutive disturbances, or those which are due to a regularly varying cause (as the lunar phase or declination) and intermittent disturbances, or those which are irregular in amount, and occur at intervals. Since the sum of the positive differences is necessarily equal to the sum of the negative differences, if we divide half the sum in each month by the number of days for which the mean westerly declination was greater than the monthly mean, and also by the number of days for which it was less, we shall have the average of the positive and of the negative differences in each month. These, with their differences, are as follow:—

| | Jan. | Feb. | March. | April. | May. | June. | July. | Aug. | Sept. | Oct. | Nov. | Dec. |
|---|---|---|---|---|---|---|---|---|---|---|---|---|
| | +0′·48 | 0′·70 | 0′·35 | 0′·77 | 0′·44 | 0′·40 | 0′·61 | 0′·70 | 0′·87 | 1′·31 | 0′·40 | 0′·38 |
| | −0′·69 | 0′·75 | 0′·41 | 0′·41 | 0′·65 | 0′·37 | 0′·49 | 0′·41 | 0′·58 | 0′·66 | 0′·63 | 0′·72 |
| Diff., | −0′·21 | −0′·05 | −0′·06 | +0′·36 | −0′·21 | +0′·03 | +0′·12 | +0′·29 | +0′·29 | +0′·65 | −0′·23 | −0′·34 |

In the year 1844, the greatest departures of the daily mean positions from the monthly means were towards the west in the months of August, September, and October, and towards the east in November, December, and January.

The following Table was formed from Table I. The means of westerly declination on the 12 days between January 4 and December 23, 1844, on which the Moon was 15, 16, 17 . . . days old, having been obtained, they were corrected for secular change at the rate of +0′·0156 *per diem*; the differences between the lowest mean and the others are inserted in the first portion of Table II. As in some lunations the 29th day was wanting, the mean westerly declination for the 28th and 0th day was used instead.

For the variations with reference to the moon's declination, the 13 days on which the moon was farthest north between January 3 and December 23, 1844, were numbered 0, the days after these were numbered 1, 2, 3, . . . 26 or 27; in cases in which the moon was again farthest north at the 27th day, the mean westerly declination for the 26th and 0th day was used for the 27th, the mean westerly declination for each day was then obtained, and after correction for secular change as before, the differences from the lowest mean were entered in the following table.

For the variations with respect to the moon's distance from the earth, the days between January 7 and December 30, 1844, before and after apogee and perigee, were numbered from 1 to 7, in some instances there

were only 11 days between apogee and perigee, or between perigee and apogee; in these cases, the 6th day was counted as the 6th and 7th before and after the two epochs; where there were 12 days of interval, the 6th before apogee was counted as the 7th after perigee, and *vice versa*; when there were 13 days of interval, the 7th was counted as the 7th before the one epoch and after the other; and when there were 15 or 16 days, the mean westerly declination for the 7th and 8th day was used as a mean for the 7th day. The mean westerly declination for each of the 13 days so numbered was then obtained and corrected for secular change, as in the first case; the differences from the lowest mean are given below.

TABLE II.—Mean Variations of Westerly Declination after Eliminating the Secular Change, with reference to the Moon's Age, Declination, and Distance from the Earth, for 1844.

| Moon's Age. | Variations of West Declination. | Moon's Age. | Variations of West Declination. | After Moon farthest North. | Variations of West Declination. | After Moon farthest North. | Variations of West Declination. | Before and after Perigee. | Variations of West Declination. | Before and after Apogee. | Variations of West Declination. |
|---|---|---|---|---|---|---|---|---|---|---|---|
| Day. | ′ | Day. | ′ | Day. | ′ | Day. | ′ | Day. | ′ | Day. | ′ |
| 15 | 0·46 | 0 | 0·65 | 0 | 0·63 | 14 | 0·47 | 7 | 0·38 | 7 | 0·77 |
| 16 | 0·69 | 1 | 0·27 | 1 | 0·32 | 15 | 0·31 | 6 | 0·12 | 6 | 0·62 |
| 17 | 0·60 | 2 | 0·42 | 2 | 0·45 | 16 | 0·49 | 5 | 0·41 | 5 | 0·42 |
| 18 | 0·94 | 3 | 0·49 | 3 | 0·38 | 17 | 0·15 | 4 | 0·25 | 4 | 0·61 |
| 19 | 0·79 | 4 | 0·68 | 4 | 0·16 | 18 | 0·39 | 3 | 0·37 | 3 | 0·39 |
| 20 | 0·48 | 5 | 0·38 | 5 | 0·05 | 19 | 0·74 | 2 | 0·22 | 2 | 1·12 |
| 21 | 0·66 | 6 | 0·42 | 6 | 0·08 | 20 | 0·17 | 1 | 0·49 | 1 | 0·68 |
| 22 | 0·64 | 7 | 0·21 | 7 | 0·08 | 21 | 0·20 | P | 0·66 | A | 0·81 |
| 23 | 0·64 | 8 | 0·04 | 8 | 0·24 | 22 | 0·60 | 1 | 0·34 | 1 | 0·78 |
| 24 | 0·50 | 9 | 0·53 | 9 | 0·00 | 23 | 0·51 | 2 | 0·67 | 2 | 0·71 |
| 25 | 0·53 | 10 | 0·53 | 10 | 0·06 | 24 | 0·08 | 3 | 0·55 | 3 | 0·67 |
| 26 | 0·44 | 11 | 0·12 | 11 | 0·16 | 25 | 0·55 | 4 | 0·58 | 4 | 0·33 |
| 27 | 0·61 | 12 | 0·28 | 12 | 0·06 | 26 | 0·58 | 5 | 0·56 | 5 | 0·40 |
| 28 | 0·32 | 13 | 0·00 | 13 | 0·20 | 27 | 0·54 | 6 | 0·54 | 6 | 0·31 |
| 29 | 0·45 | 14 | 0·12 | | | | | 7 | 0·79 | 7 | 0·00 |

The corrections for secular change have been made at the rate of 0′·0156 *per diem*, upon the supposition that it is regular from day to day, which is most probable when the means of several days are taken; the operation is similar to a transference of the projected ordinates from an oblique to a horizontal axis.

*Note.*—In the discussions with reference to the moon's age, declination, and distance from the earth, it should be remarked, that since 12 lunations occur in nearly the same time as 13 revolutions with respect to node or with respect to apogee, any variations in the element discussed, due to changes in the moon's declination or distance, will be eliminated in the mean of 12 lunations; and similarly in the means of 13 revolutions with respect to declination or with respect to distance, variations related to changes of phase alone will be eliminated; but this is not the case in the combinations for declination and distance, with respect to each other.

*Variations of Westerly Declination with reference to the Moon's Age.*—The general appearance of these variations, is that of a principal maximum about 3 days after the full moon, and a principal minimum between the 7th and 13th day; there are several secondary maxima and minima, as might be expected where the variations are so small, and the uneliminated sources of error so considerable. It is only from a mean of several years that a satisfactory result may be obtained.

*Means of Groups.*

| | | | |
|---|---|---|---|
| 14 days to 16 days, Full Moon, | 0′·42 | 29 days to 1 day, New Moon, | 0′·46 |
| 17 ..... 20 ... | 0′·70 | 2 ..... 5 ... | 0′·49 |
| 21 ..... 24 ... | 0′·61 | 6 ..... 9 ... | 0′·30 |
| 25 ..... 28 ... | 0′·47 | 10 ..... 13 ... | 0′·23 |

There is the appearance of a secondary minimum about new Moon, and of a secondary maximum immediately thereafter.

*Variations of Westerly Declination with reference to the Moon's Declination.*—The following are the means of groups for 1844 :—

| | | | |
|---|---|---|---|
| 27 days to 1 day, Moon farthest North, | 0′·50 | 13 days to 15 days, Moon farthest South, | 0′·33 |
| 2 ..... 5 ... | 0′·26 | 16 ..... 19 ... | 0′·44 |
| 6 ..... 8 ... | 0′·13 | 20 ..... 22 ... | 0′·32 |
| 9 ..... 12 ... | 0′·07 | 23 ..... 26 ... | 0′·43 |

The principal maximum occurs about the time when the moon is farthest north, the principal minimum after it has crossed the equator going south; a secondary maximum is indicated after the moon is farthest south, and a secondary minimum after crossing the equator moving north.

*Variations of Westerly Declination, with reference to the Moon's distance from the Earth* :—

| | | | |
|---|---|---|---|
| 6 days after apogee to 6 days before perigee, | 0′·20 | 6 days after perigee to 6 days before apogee, | 0′·68 |
| 5 days to 2 days before perigee, ..... | 0′·31 | 5 days to 2 days before apogee, ..... | 0′·63 |
| 1 day before to 1 day after perigee,..... | 0′·50 | 1 day before to 1 day after apogee,..... | 0′·76 |
| 2 days to 5 days after perigee,..... | 0′·59 | 2 days to 5 days after apogee,..... | 0′·53 |

In 1844, the principal maximum occurred about apogee, and the principal minimum about midway between apogee and perigee.

Since a revolution of the perigee is performed in about 9 years, it will require observations for that period in order that the variations due to changing distance may be eliminated in the discussions for change of the moon's declination, and *vice versa*. If the variations due to one argument be much smaller than for the other, a shorter series of observations may suffice; this, however, will be determined chiefly by the extent of coincidence in the results of successive years. In the case of any argument for which the variations are small, the large variations due to irregular causes will, in general, render a single year's observations insufficient for a confident conclusion. Where, therefore, in the following discussions no extra reasons are brought forward in support of the results, they should be considered as results for the year 1844 only, which may be wholly or partially contradicted or confirmed by the results for other years. It has not been always thought necessary to point out the coincidences or oppositions of the results for 1843 and 1844, and that especially, on account of the incompleteness of the series for 1843.

*Annual Variation of the Diurnal Ranges of Magnetic Declination.*—The following are the monthly means of the diurnal ranges from Table III. :—

| Jan. | Feb. | March. | April. | May. | June. | July. | Aug. | Sept. | Oct. | Nov. | Dec. |
|---|---|---|---|---|---|---|---|---|---|---|---|
| 9′·00 | 10′·28 | 16′·21 | 15′·88 | 13′·48 | 12′·41 | 12′·36 | 14′·02 | 15′·22 | 15′·69 | 15′·91 | 11′·22 |

Whence the mean diurnal range is a maximum twice and a minimum twice, in the course of the year; it is a maximum in the months of March and April, and again in the months of September, October, and November, it has its least value in the month of January, and it is a secondary minimum in the months of June and July. The diurnal ranges of magnetic declination were greatest about the equinoxes, and least near the solstices.

When we compare these means with the ranges of the mean diurnal variation of each month (see Table VI.), we obtain the following quantities, which are the excesses of the monthly means of the diurnal ranges over the diurnal ranges of the monthly mean variations :—

| Jan. | Feb. | March. | April. | May. | June. | July. | Aug. | Sept. | Oct. | Nov. | Dec. |
|---|---|---|---|---|---|---|---|---|---|---|---|
| 3′·74 | 3′·92 | 6′·25 | 5′·68 | 4′·52 | 1′·36 | 2′·30 | 3′·71 | 5′·27 | 4′·75 | 6′·63 | 5′·26 |

From which it appears, that those irregular causes which render the mean of the diurnal ranges greater than the range of the mean diurnal variation, have their maximum effect in March and November, their minimum in June, and a secondary minimum in January, or nearly according to the law stated above for the annual variation of the diurnal ranges.

TABLE III.—Diurnal Range of Magnetic Declination for each Civil Day, as deduced from the Hourly Observations, with the Mean for each Week in 1844.

| Civil Day. | Jan. | Feb. | March. | April. | May. | June. | July. | Aug. | Sept. | Oct. | Nov. | Dec. |
|---|---|---|---|---|---|---|---|---|---|---|---|---|
| | ′ | ′ | ′ | ′ | ′ | ′ | ′ | ′ | ′ | ′ | ′ | ′ |
| 1 | 10·88 | 21·03 | 6·05 | 11·61 | 15·67 | 14·32 | 12·78 | 19·12 | [15·02] | 44·72 | 14·19 | [12·61] |
| 2 | 12·10 | 7·46 | 20·24 | 16·22 | 11·26 | [10·91] | 13·51 | 19·85 | 11·57 | 19·65 | 16·45 | 12·07 |
| 3 | 5·00 | 11·42 | [19·72] | 14·70 | 18·72 | 9·67 | 10·83 | 17·69 | 12·09 | 14·32 | [11·76] | 4·53 |
| 4 | 4·20 | [14·91] | 26·09 | 12·26 | 8·43 | 8·41 | 13·81 | [14·15] | 11·42 | 11·83 | 17·07 | 22·76 |
| 5 | 18·71 | 14·39 | 22·80 | 15·28 | [12·84] | 11·93 | 10·94 | 9·04 | 10·16 | 12·36 | 6·75 | 10·04 |
| 6 | 23·80 | 11·98 | 24·07 | 29·21 | 13·39 | 12·49 | 12·48 | 9·12 | 7·56 | [11·69] | 6·14 | 4·71 |
| 7 | [12·65] | 23·21 | 27·29 | [15·52] | 9·52 | 12·99 | [11·48] | 10·09 | 11·21 | 11·06 | 8·22 | 5·92 |
| 8 | 10·81 | 14·26 | 27·22 | 11·73 | 15·72 | 11·65 | 15·97 | 12·11 | [10·66] | 12·41 | 8·58 | [ 6·67] |
| 9 | 8·89 | 8·39 | 23·15 | 9·87 | 15·20 | [11·79] | 6·89 | 16·27 | 14·86 | 8·75 | 6·88 | 3·54 |
| 10 | 9·49 | 14·91 | [18·10] | 14·75 | 8·46 | 11·33 | 8·78 | 13·67 | 9·54 | 7·04 | [11·68] | 8·20 |
| 11 | 7·16 | [ 8·88] | 10·18 | 15·82 | 10·62 | 10·78 | 9·99 | [13·00] | 10·64 | 6·73 | 17·02 | 7·60 |
| 12 | 10·29 | 7·45 | 11·27 | 9·68 | [13·92] | 11·53 | 8·63 | 11·57 | 11·50 | 8·50 | 18·60 | 3·55 |
| 13 | 5·33 | 5·20 | 9·48 | 10·49 | 10·05 | 13·56 | 12·19 | 14·28 | 12·92 | [ 8·71] | 10·76 | 4·14 |
| 14 | [ 7·05] | 3·10 | 6·91 | [15·96] | 17·48 | 12·48 | [12·08] | 10·10 | 17·53 | 11·21 | 12·17 | 10·84 |
| 15 | 5·54 | 8·52 | 8·76 | 12·79 | 21·72 | 10·56 | 14·18 | 9·64 | [14·18] | 9·42 | 6·03 | [ 7·60] |
| 16 | 6·45 | 6·84 | 9·22 | 8·61 | 10·83 | [13·56] | 13·58 | 19·72 | 10·82 | 9·39 | 63·80 | 13·52 |
| 17 | 7·54 | 13·18 | [11·35] | 38·39 | 9·01 | 17·96 | 13·89 | 14·41 | 17·38 | 10·89 | [20·86] | 4·91 |
| 18 | 13·61 | [ 7·06] | 17·06 | 16·36 | 9·40 | 14·16 | 18·65 | [12·70] | 14·95 | 14·28 | 20·12 | 8·65 |
| 19 | 3·73 | 3·36 | 16·85 | 8·81 | [12·75] | 12·62 | 12·54 | 11·28 | 19·72 | 7·71 | 14·33 | 19·49 |
| 20 | 6·50 | 4·89 | 9·32 | 10·50 | 8·41 | 10·46 | 12·28 | 9·88 | 28·71 | [15·80] | 8·72 | 32·83 |
| 21 | [ 6·68] | 5·56 | 8·79 | [11·41] | 20·72 | 19·77 | [12·08] | 11·26 | 12·23 | 30·65 | 5·65 | 20·23 |
| 22 | 5·15 | 8·09 | 12·04 | 10·54 | 18·14 | 9·46 | 7·93 | 17·57 | [18·47] | 17·51 | 41·83 | [14·87] |
| 23 | 7·87 | 7·01 | 9·53 | 11·26 | 27·58 | [12·47] | 10·48 | 15·42 | 11·96 | 13·77 | 47·36 | 6·66 |
| 24 | 3·21 | 4·57 | [ 9·46] | 10·97 | 8·68 | 9·26 | 10·60 | 14·44 | 11·59 | 13·22 | [20·28] | 4·84 |
| 25 | 16·66 | [ 8·81] | 9·91 | 42·78 | 17·02 | 12·53 | 19·49 | [14·07] | 26·59 | 43·95 | 9·32 | 5·18 |
| 26 | 7·63 | 7·70 | 8·44 | 22·67 | [15·01] | 13·37 | 9·39 | 12·46 | 27·28 | 33·49 | 4·27 | 6·09 |
| 27 | 5·08 | 7·27 | 8·07 | 18·63 | 12·53 | 9·78 | 17·01 | 12·05 | 20·99 | [21·90] | 13·23 | 9·31 |
| 28 | [ 9·47] | 18·21 | 14·93 | [21·43] | 12·78 | 10·55 | [13·80] | 12·47 | 17·58 | 13·33 | 18·76 | 13·32 |
| 29 | 5·88 | 19·06 | 34·10 | 15·38 | 11·48 | 18·53 | 11·94 | 16·58 | [24·98] | 15·99 | 12·96 | [14·52] |
| 30 | 8·33 | | 39·53 | 13·48 | 9·48 | [12·66] | 10·41 | 22·75 | 19·64 | 11·42 | 4·56 | 32·35 |
| 31 | 13·26 | | [21·85] | | 11·66 | | 14·59 | 15·69 | | 9·95 | | 16·37 |

TABLE IV.—Means of the Diurnal Ranges of Magnetic Declination with reference to the Moon's Age, Declination, and Distance, for 1844.

| Moon's Age. | Mean Range. | Moon's Age. | Mean Range. | After Moon farthest North. | Mean Range. | After Moon farthest North. | Mean Range. | Before and after Perigee. | Mean Range. | Before and after Apogee. | Mean Range. |
|---|---|---|---|---|---|---|---|---|---|---|---|
| Day. | ′ | Day. | ′ | Day. | ′ | Day. | ′ | Day. | ′ | Day. | ′ |
| 15 | 15·59 | 0 | 12·21 | 0 | 10·43 | 14 | 11·61 | 7 | 15·84 | 7 | 13·92 |
| 16 | 16·28 | 1 | 11·69 | 1 | 11·35 | 15 | 12·51 | 6 | 12·57 | 6 | 12·78 |
| 17 | 15·82 | 2 | 11·89 | 2 | 15·22 | 16 | 9·89 | 5 | 16·46 | 5 | 13·48 |
| 18 | 15·96 | 3 | 10·32 | 3 | 13·36 | 17 | 15·20 | 4 | 12·87 | 4 | 15·70 |
| 19 | 18·76 | 4 | 11·03 | 4 | 17·85 | 18 | 12·25 | 3 | 12·08 | 3 | 16·50 |
| 20 | 13·06 | 5 | 11·28 | 5 | 15·47 | 19 | 12·79 | 2 | 12·68 | 2 | 19·33 |
| 21 | 12·46 | 6 | 16·52 | 6 | 15·14 | 20 | 14·24 | 1 | 12·72 | 1 | 13·27 |
| 22 | 12·05 | 7 | 12·17 | 7 | 12·69 | 21 | 13·32 | P | 11·36 | A | 12·26 |
| 23 | 9·89 | 8 | 14·98 | 8 | 14·51 | 22 | 11·92 | 1 | 15·80 | 1 | 10·17 |
| 24 | 11·97 | 9 | 12·67 | 9 | 13·06 | 23 | 19·93 | 2 | 13·29 | 2 | 10·00 |
| 25 | 9·86 | 10 | 16·23 | 10 | 11·26 | 24 | 18·45 | 3 | 12·40 | 3 | 11·45 |
| 26 | 9·16 | 11 | 16·40 | 11 | 11·69 | 25 | 12·99 | 4 | 10·80 | 4 | 12·61 |
| 27 | 10·73 | 12 | 17·76 | 12 | 13·54 | 26 | 13·07 | 5 | 14·71 | 4 | 14·06 |
| 28 | 10·77 | 13 | 19·38 | 13 | 12·04 | 27 | 11·87 | 6 | 12·87 | 6 | 16·44 |
| 29 | 10·69 | 14 | 16·78 | | | | | 7 | 13·81 | 7 | 16·18 |

This table has been formed from Table III. in the manner described for Table II.

*Variations of the Diurnal Ranges of Magnetic Declination, with reference to the Moon's Age.*—The differences of the diurnal ranges of the magnetic declination at the different ages of the moon are very remarkable; these, and the law of the variations, are shewn more regularly in the following means of groups:—

| | | | |
|---|---|---|---|
| 14 days to 16 days, Full Moon, | 16′·22 | 29 days to 1 day, New Moon, | 11′·53 |
| 17 ..... 20 .. | 15′·90 | 2 ..... 5 ... | 11′·13 |
| 21 ..... 24 ... | 11′·59 | 6 ..... 9 ... | 14′·08 |
| 25 ..... 28 ... | 10′·13 | 10 ..... 13 ... | 17′·44 |

From these means, *the diurnal range of magnetic declination is greatest about full moon, and least about new moon*, the actual epochs being rather before these events. This law is exceedingly well marked; in fact the variation of these means is upwards of seven minutes, and is greater than the variation of the monthly means. This result is not a little curious, when it is remembered that each of the 8 values above is a mean of the ranges for from 36 to 48 days; these, being distributed in groups of 3 or 4 days at equal intervals over the year, the range due to the sun's position alone is completely eliminated. In 1844, then, the diurnal range of magnetic declination varied more in the means for 8 periods during the synodical revolution of the moon, than in the means for 12 periods during the earth's revolution round the sun.

It should be remarked, that the diurnal range does not vary much during the first and fourth quarters, nor during the second and third quarters, the average diurnal range of the 10 days from the moon's age, 10 to 19 days, being 16′·89; and for the 10 days from the moon's age, 25 days to 4 days, being 10′·83; the mean for the remaining 10 days (20 to 24, and 5 to 9) being 12′·70.

An examination of the simple diurnal ranges, shews that the law announced is distinctly marked in four or five lunations, as may be readily seen in the projected values.* It is well marked in the lunation occurring between January 19 and February 17; but the variations of the range are greater in the two lunations immediately succeeding that and in the two lunations occurring in September and October. If the points which indicate the weekly means in the projections be followed, it will be evident that the law is still existing, though with more irregularity, in the months of August, November, and December. The value of the range oscillates considerably from day to day, but in the lunations particularly referred to, the larger values, as well as the smaller values, and weekly means, equally exhibit the same law; in some cases, intermittent disturbances produce irregularity. It is evident, from these projected values, that the diurnal range of the magnetic declination in 1844 *was greatest when the sun and moon were in opposition near the equator*, or, more accurately, immediately before the vernal and after the autumnal equinox.

*Variations of the Diurnal Range of Magnetic Declination, with reference to the Moon's Declination.*—From the second portion of Table IV., it appears that the diurnal range is a minimum when the Moon has its greatest south and greatest north declinations, and a maximum about 2 days before it passes the equator moving south, and 2 days before it passes the equator moving north. The following are means of groups:—

| | | | |
|---|---|---|---|
| 27 days to 1 day, Moon farthest north, | 11′·22 | 13 days to 15 days, Moon farthest south, | 12′·05 |
| 2 ..... 5 ... | 15′·48 | 16 ..... 19 ... | 12′·53 |
| 6 ..... 8 ... | 14′·11 | 20 ..... 22 ... | 13′·16 |
| 9 ..... 12 ... | 12′·39 | 23 ..... 26 ... | 16′·08 |

The variation of these means is still considerable, being nearly 5′. The law of the variation of the diurnal ranges for 1844, is nearly the same with reference to the moon's position in declination as to the sun's position in declination, and may be generally stated thus:—*The diurnal range of magnetic declination is less when the sun or moon has its greatest north or south declination, than at the intermediate periods.*

It will be remarked, that this result may be chiefly or altogether dependent on the other law given above, with respect to the relative positions of the sun and moon.

*Variations of the Diurnal Ranges of Magnetic Declination with reference to the Moon's Distance from the Earth.*—Apogee happens nearly at the time of greatest north declination in 1844; consequently, from the previous discussion, there are minima about apogee and perigee, and maxima at the intermediate periods; as is also evident in the following means of groups:—

| | | | |
|---|---|---|---|
| 6 days after apogee to 6 days before perigee, | 15′·26 | 6 days after perigee to 6 days before apogee, | 13′·34 |
| 5 days to 2 days before perigee, . | 13′·52 | 5 days to 2 days before apogee, . . | 16′·25 |
| 1 day before to 1 day after perigee, . | 13′·29 | 1 day before to 1 day after apogee, . | 11′·90 |
| 2 days to 5 days after perigee, . . | 12′·80 | 2 days to 5 days after apogee, . | 12′·03 |

* See the Plates at the end of the volume.

TABLE V.—Hourly Means of Westerly Declination for each Month in 1844.

| Mean Time. Gött. | Mean Time. Mak. | Jan. | Feb. | March. | April. | May. | June. | July. | Aug. | Sept. | Oct. | Nov. | Dec. | Year. |
|---|---|---|---|---|---|---|---|---|---|---|---|---|---|---|
| h. | h. | ′ | ′ | ′ | ′ | ′ | ′ | ′ | ′ | ′ | ′ | ′ | ′ | ′ |
| 13 | 12 | 19·45 | 17·39 | 15·22 | 17·01 | 14·27 | 15·77 | 14·98 | 15·14 | 15·33 | 13·23 | 11·55 | 12·84 | 15·18 |
| 14 | 13 | 19·58 | 18·27 | 16·25 | 15·88 | 15·20 | 15·37 | 14·87 | 15·73 | 15·46 | 12·94 | 12·57 | 12·76 | 15·41 |
| 15 | 14 | 19·63 | 18·17 | 16·96 | 16·30 | 15·86 | 14·79 | 14·55 | 15·04 | 15·35 | 13·92 | 14·38 | 13·64 | 15·72 |
| 16 | 15 | 20·34 | 17·93 | 15·85 | 16·03 | 15·83 | 14·25 | 14·50 | 14·85 | 14·79 | 15·05 | 14·21 | 14·42 | 15·67 |
| 17 | 16 | 19·96 | 17·48 | 16·92 | 16·10 | 15·62 | 13·25 | 13·73 | 14·19 | 14·48 | 15·36 | 13·84 | 13·98 | 15·41 |
| 18 | 17 | 19·86 | 17·74 | 16·56 | 16·06 | 14·94 | 12·16 | 12·38 | 14·40 | 15·42 | 15·57 | 14·17 | 13·91 | 15·26 |
| 19 | 18 | 20·49 | 17·93 | 17·24 | 16·06 | 13·98 | 11·71 | 12·65 | 14·32 | 15·44 | 15·74 | 13·99 | 14·25 | 15·32 |
| 20 | 19 | 20·52 | 18·43 | 16·74 | 15·71 | 13·75 | 12·23 | 12·76 | 13·91 | 15·41 | 14·86 | 14·89 | 14·07 | 15·27 |
| 21 | 20 | 20·42 | 18·73 | 16·76 | 15·79 | 14·53 | 13·10 | 13·85 | 15·52 | 15·69 | 14·46 | 15·34 | 14·18 | 15·70 |
| 22 | 21 | 21·13 | 19·29 | 17·73 | 17·22 | 15·82 | 15·02 | 15·45 | 17·66 | 17·53 | 15·60 | 15·71 | 14·50 | 16·89 |
| 23 | 22 | 22·08 | 20·87 | 19·70 | 19·36 | 18·35 | 17·04 | 17·62 | 19·70 | 20·40 | 17·91 | 17·00 | 15·19 | 18·77 |
| 0 | 23 | 22·84 | 22·10 | 21·84 | 21·88 | 20·83 | 20·40 | 20·22 | 22·19 | 23·13 | 19·85 | 18·58 | 16·34 | 20·85 |
| 1 | 0 | 23·69 | 22·44 | 23·05 | 25·07 | 22·23 | 22·09 | 21·73 | 24·22 | 23·77 | 21·48 | 19·79 | 17·64 | 22·27 |
| 2 | 1 | 23·19 | 22·33 | 24·15 | 24·97 | 22·71 | 22·76 | 22·44 | 24·06 | 23·34 | 21·21 | 19·20 | 17·31 | 22·31 |
| 3 | 2 | 22·47 | 21·98 | 22·36 | 24·20 | 22·34 | 22·25 | 21·58 | 22·91 | 22·08 | 19·80 | 18·21 | 16·52 | 21·39 |
| 4 | 3 | 21·69 | 20·68 | 20·87 | 22·67 | 21·37 | 21·08 | 20·58 | 20·24 | 19·54 | 17·99 | 16·69 | 14·29 | 19·81 |
| 5 | 4 | 21·42 | 19·44 | 19·31 | 20·82 | 19·97 | 19·20 | 18·92 | 19·03 | 17·50 | 16·40 | 15·68 | 14·72 | 18·53 |
| 6 | 5 | 20·86 | 19·50 | 16·45 | 18·61 | 18·85 | 17·76 | 18·10 | 17·74 | 16·51 | 15·34 | 15·11 | 14·60 | 17·45 |
| 7 | 6 | 20·24 | 19·23 | 15·54 | 17·46 | 18·31 | 16·98 | 17·42 | 16·85 | 14·98 | 14·93 | 10·93 | 14·50 | 16·45 |
| 8 | 7 | 19·94 | 18·06 | 16·68 | 16·82 | 17·63 | 16·78 | 15·86 | 16·61 | 14·35 | 14·12 | 11·66 | 13·63 | 16·01 |
| 9 | 8 | 18·69 | 16·76 | 15·67 | 17·31 | 16·02 | 16·55 | 16·02 | 15·92 | 13·82 | 10·54 | 10·51 | 11·77 | 14·96 |
| 10 | 9 | 18·43 | 16·46 | 16·29 | 16·57 | 16·50 | 16·28 | 15·85 | 15·20 | 15·43 | 11·81 | 10·90 | 12·32 | 15·17 |
| 11 | 10 | 18·53 | 16·08 | 15·73 | 15·96 | 15·66 | 15·76 | 15·21 | 15·43 | 15·13 | 11·81 | 11·56 | 11·98 | 14·90 |
| 12 | 11 | 18·89 | 17·14 | 14·21 | 14·87 | 14·57 | 15·37 | 15·00 | 15·76 | 15·53 | 11·74 | 10·91 | 11·68 | 14·64 |

Table V. is intended chiefly as a key for comparing the hourly observations.

The true mean time at Makerstoun is $10^m$ in advance of the numbers given in the second column of Table V.

*Diurnal Variation of Westerly Declination.*—The mean result for the year 1844, may be stated as follows:—The north end of the declination magnet was farthest west at $40^m$ past Noon, Makerstoun mean time; it then moved towards the east till about $10^h$ $0^m$ P.M., having moved through about 8′; from $10^h$ P.M. till $2^h$ $40^m$ A.M. it moved 1′ towards the west, returning afterwards till $6^h$ $10^m$ A.M., 0′·3 towards the east again; from $7^h$ A.M. till $0^h$ $40^m$ P.M. it moved through 7′ to its farthest westerly position. The mean diurnal variation for the year, therefore, consisted of two maxima and two minima of westerly declination, the minima differing only 0′·7 from each other. In these, as in the following cases, the approximate epochs of maxima and minima are obtained from the projected values by graphic interpolation.

The principal maximum occurred at the following times in the different months of 1844:—

| | Jan. | Feb. | March. | April. | May. | June. | July. | Aug. | Sept. | Oct. | Nov. | Dec. |
|---|---|---|---|---|---|---|---|---|---|---|---|---|
| P.M. | $0^h$ $10^m$ | $0^h$ $10^m$ | $1^h$ $10^m$ | $0^h$ $30^m$ | $1^h$ $10^m$ | $1^h$ $10^m$ | $1^h$ $10^m$ | $0^h$ $30^m$ | $0^h$ $10^m$ | $0^h$ $40^m$ | $0^h$ $10^m$ | $0^h$ $20^m$ |

The principal maximum, therefore, occurred nearer noon in Winter than in Summer, and nearer noon in August and September than in March and April (this is evident whether mean or apparent time be employed).

The principal minimum occurred between $5^h$ and $7^h$ A.M. in the months of May, June, July, and August, and before midnight in the other months of the year. The following are the approximate times for each month.

| Jan. | Feb. | March. | April. | May. | June. | July. | Aug. | Sept. | Oct. | Nov. | Dec. |
|---|---|---|---|---|---|---|---|---|---|---|---|
| $10^h$ P.M. | $10^h$ | $10^h$ ? | $11^h$ ? P.M. | $6^h$ $30^m$ A.M. | $6^h$ $10^m$ | $5^h$ $10^m$ | $6^h$ ? A.M. | $8^h$ P.M. | $8^h$ ? | $9^h$ ? | $10^h$ ? P.M. |

On account of considerable irregularities occurring in some months near the epoch of principal minimum, the times, in consequence, are frequently very rough approximations.

TABLE VI.—Diurnal Variations of Westerly Declination for each Month in 1844.

| Mak. M. T. | Jan. | Feb. | March. | April. | May. | June. | July. | Aug. | Sept. | Oct. | Nov. | Dec. | Year. |
|---|---|---|---|---|---|---|---|---|---|---|---|---|---|
| h. | ′ | ′ | ′ | ′ | ′ | ′ | ′ | ′ | ′ | ′ | ′ | ′ | ′ |
| 12 | 1·02 | 1·31 | 1·01 | 2·14 | 0·52 | 4·06 | 2·60 | 1·23 | 1·51 | 2·69 | 1·04 | 1·16 | 0·54 |
| 13 | 1·15 | 2·19 | 2·04 | 1·01 | 1·45 | 3·66 | 2·49 | 1·82 | 1·64 | 2·40 | 2·06 | 1·08 | 0·77 |
| 14 | 1·20 | 2·09 | 2·75 | 1·43 | 2·11 | 3·08 | 2·17 | 1·13 | 1·53 | 3·38 | 3·87 | 1·96 | 1·08 |
| 15 | 1·91 | 1·85 | 1·64 | 1·16 | 2·08 | 2·54 | 2·12 | 0·94 | 0·97 | 4·51 | 3·70 | 2·74 | 1·03 |
| 16 | 1·53 | 1·40 | 2·71 | 1·23 | 1·87 | 1·54 | 1·35 | 0·28 | 0·66 | 4·82 | 3·33 | 2·30 | 0·77 |
| 17 | 1·43 | 1·66 | 2·35 | 1·19 | 1·19 | 0·45 | 0·00 | 0·49 | 1·60 | 5·03 | 3·66 | 2·23 | 0·62 |
| 18 | 2·06 | 1·85 | 3·03 | 1·19 | 0·23 | 0·00 | 0·27 | 0·41 | 1·62 | 5·20 | 3·48 | 2·57 | 0·68 |
| 19 | 2·09 | 2·35 | 2·53 | 0·84 | 0·00 | 0·52 | 0·38 | 0·00 | 1·59 | 4·32 | 4·38 | 2·39 | 0·63 |
| 20 | 1·99 | 2·65 | 2·55 | 0·92 | 0·78 | 1·39 | 1·47 | 1·61 | 1·87 | 3·92 | 4·83 | 2·50 | 1·06 |
| 21 | 2·70 | 3·21 | 3·52 | 2·35 | 2·07 | 3·31 | 3·07 | 3·75 | 3·71 | 5·06 | 5·20 | 2·82 | 2·25 |
| 22 | 3·65 | 4·79 | 5·49 | 4·49 | 4·60 | 5·33 | 5·24 | 5·79 | 6·58 | 7·37 | 6·49 | 3·51 | 4·13 |
| 23 | 4·41 | 6·02 | 7·63 | 7·01 | 7·08 | 8·69 | 7·84 | 8·28 | 9·31 | 9·31 | 8·07 | 4·66 | 6·21 |
| 0 | 5·26 | 6·36 | 8·84 | 10·20 | 8·48 | 10·38 | 9·35 | 10·31 | 9·95 | 10.94 | 9·28 | 5·96 | 7·63 |
| 1 | 4·76 | 6·25 | 9·94 | 10·10 | 8·96 | 11·05 | 10·06 | 10·15 | 9·52 | 10·67 | 8·69 | 5·63 | 7·67 |
| 2 | 4·04 | 5·90 | 8·15 | 9·33 | 8·59 | 10·54 | 9·20 | 9·00 | 8·26 | 9·26 | 7·70 | 4·84 | 6·75 |
| 3 | 3·26 | 4·60 | 6·66 | 7·80 | 7·62 | 9·37 | 8·20 | 6·33 | 5·72 | 7·45 | 6·18 | 2·61 | 5·17 |
| 4 | 2·99 | 3·36 | 5·10 | 5·95 | 6·22 | 7·49 | 6·54 | 5·12 | 3·68 | 5·86 | 5·17 | 3·04 | 3·89 |
| 5 | 2·43 | 3·42 | 2·24 | 3·74 | 5·10 | 6·05 | 5·72 | 3·83 | 2·69 | 4·80 | 4·60 | 2·92 | 2·81 |
| 6 | 1·81 | 3·15 | 1·33 | 2·59 | 4·56 | 5·27 | 5·04 | 2·94 | 1·16 | 4·39 | 0·42 | 2·82 | 1·81 |
| 7 | 1·51 | 1·98 | 2·47 | 1·95 | 3·88 | 5·07 | 3·48 | 2·70 | 0·53 | 3·58 | 1·15 | 1·95 | 1·37 |
| 8 | 0·26 | 0·68 | 1·46 | 2·44 | 2·27 | 4·84 | 3·64 | 2·01 | 0·00 | 0·00 | 0·00 | 0·09 | 0·32 |
| 9 | 0·00 | 0·38 | 2·08 | 1·70 | 2·75 | 4·57 | 3·47 | 1·29 | 1·61 | 1·27 | 0·39 | 0·64 | 0·53 |
| 10 | 0·10 | 0·00 | 1·52 | 1·09 | 1·91 | 4·05 | 2·83 | 1·52 | 1·31 | 1·27 | 1·05 | 0·30 | 0·26 |
| 11 | 0·46 | 1·06 | 0·00 | 0·00 | 0·82 | 3·66 | 2·62 | 1·85 | 1·71 | 1·20 | 0·40 | 0·00 | 0·00 |

The approximate times of the secondary maximum (+) and maximum (−) are as follow; the hours in parentheses are times of inflexions, which do not attain the character of maxim a or minima.

| | Jan. | Feb. | March. | April. | May. | June. | July. | Aug. | Sept. | Oct. | Nov. | Dec. |
|---|---|---|---|---|---|---|---|---|---|---|---|---|
| + | (3h A.M.)? | 2h | 3h ? | 2h ? | 3h A.M. | (12h P.M.)? | (1h A.M.)? | 12h ? P.M. | 12h ? P.M. | 6h A.M. | 2h | (3h A.M.)? |
| − | (8h A.M.)? | 4½h | 7½h ? | 7½h A.M. | 12h P.M. | (6h P.M.)? | (7h A.M.)? | 9h ? P.M. | 4h ? P.M. | 8h A.M. | 5h | (7h A.M.)? |

The irregularities in the means for a single month, are too considerable to render approximations to the epochs of the secondary points of much value; on the whole, however, it may be stated, that in the 8 months which have the principal minimum before midnight, a secondary minimum occurred from 5h to 8h A.M., or within a few hours of the epoch of the principal minimum of the remaining 4 months; and in these the secondary minimum perhaps occurred between 6h and 12h P.M. The secondary maximum (or inflexion) occurred between midnight and 3 A.M. in each month excepting October.

Strictly speaking, only one maximum and one minimum are marked distinctly in the solstitial months; but although the secondary points are not absolutely exhibited, there are points of inflexion, in the projected means, near the corresponding times; there are periods when the velocity of change is zero, or has a minimum value, though it does not change sign. These seem equally results of the same physical cause, and are probably only less distinct from the superposition of other motions.

It is evident that a single year's observations, combined in the usual way, are insufficient for the determination of the true law of diurnal variation in each month of the year. This insufficiency is chiefly due to the effect of intermittent disturbances, which destroy the regularity of the continuous diurnal disturbance. From results which follow, with reference to intermittent disturbances, it will be seen not only that these are in excess at particular hours, but that they affect a particular sign, the mean disturbance deduced from any number of observations at a given hour being a positive or negative quantity. It is certain, therefore, that no accumulation of observations, combined in the usual way, can exhibit the law of the simple diurnal variation, and it becomes a matter of importance to endeavour to deduce this law at once from the series we possess.

A considerable acquaintance with the motions of the magnets, and a careful examination of the observations, have equally led me to separate the diurnal motions into three classes—1st, On particular

days in each month the magnet proceeds slowly and regularly from one known singular point to another, the deviations from this regularity being altogether of the second order with respect to the principal motion. 2d, On other days, the regularity of the first class is suddenly interrupted, for a short period, by excursions of considerable magnitude, after which the previous regularity is continued. 3d, The last class of motions is wholly irregular for large portions of the day, and consists of alternate deviations to the east and west of the mean position within short periods of time. The fact that there are certain days in each month during which the motion of the magnet seems to obey a simple and continuous law, while the disturbances which destroy the regularity on other days are so obviously discontinuous or intermittent, occurring very seldom in some months, points out a method which, if not wholly free from objection, has the advantage of simplicity, and offers, it appears to me, a very near approximation to the truth. This method consists simply in the selection of the days which comprehend the first class of motions.

Having carefully examined the nature of the diurnal variation for each day, I at first selected in each month the 10 days on which the effect of the intermittent disturbances appeared to me least. In the same manner, the 5 days with the smallest apparent irregularity in each month were selected. As the mode in which these selections were made was to some extent arbitrary, I desired Mr Welsh to make similar selections independently. Upon comparison, it was found that there were 17 days in 120, and 13 days in 60, for which we differed, and that the difference in almost every case occurred on days of which the preferability was very doubtful. It will be very obvious, however, from the coincidences of the results for the 5 days and 10 days selected, that a difference in choice of a few nearly equally good days, is altogether immaterial. The following Table contains a list of the days selected, which differ only in three instances in each class from the selections at first made by myself, and employed in forming the Tables; the days adopted from Mr Welsh's selection in preference to my own, were, March 1, for March 27; November 5, for November 8; December 25, for December 23, in the 10-day class: and April 12, for April 10; August 28, for August 21; December 7, for December 3, in the 5-day class.

TABLE VII.—List of the Ten Days and Five Days in each Month of 1844, which have been selected as being the least disturbed.

| Jan. | Feb. | March. | April. | May. | June. | July. | Aug. | Sept. | Oct. | Nov. | Dec. |
|---|---|---|---|---|---|---|---|---|---|---|---|
| 1 | 13 | 1 | 9 | * 4 | * 4 | * 2 | 6 | 2 | 4 | 5 | 3 |
| * 3 | * 14 | 12 | 10 | 7 | * 5 | * 3 | * 7 | 3 | 9 | * 6 | * 6 |
| * 4 | 15 | 13 | * 12 | 11 | 6 | 5 | 8 | * 5 | * 10 | * 7 | * 7 |
| * 13 | * 19 | * 14 | * 13 | 13 | * 7 | * 11 | * 14 | * 6 | * 11 | * 9 | * 9 |
| 15 | * 20 | * 15 | 16 | 16 | 12 | 15 | * 15 | 7 | * 12 | 13 | 11 |
| 16 | 21 | * 16 | 19 | * 17 | 14 | 19 | 19 | * 11 | 14 | * 15 | * 12 |
| 17 | 23 | 21 | * 20 | * 20 | * 15 | 20 | * 20 | * 12 | 15 | 20 | * 13 |
| * 19 | * 24 | * 23 | 22 | 29 | * 24 | * 22 | 21 | 13 | * 16 | 21 | 17 |
| 20 | 26 | 25 | * 23 | * 30 | 25 | 23 | 27 | * 16 | 18 | 26 | 24 |
| * 24 | * 27 | * 26 | * 24 | * 31 | 28 | * 24 | * 28 | 21 | * 19 | * 30 | 25 |

The * indicates that the day has been selected as one of the 5 days of least disturbance.

The following Tables contain the hourly means for each month, as deduced from the 10 days and from the 5 days of most regularity in each month.

TABLE VIII.—Hourly Means of Magnetic Declination for the Ten Days least disturbed in each Month of 1844 corrected, so that the Mean of each Ten Days equals the true Monthly Mean.

| Mak. M. T. | Jan. | Feb. | March. | April. | May. | June. | July. | Aug. | Sept. | Oct. | Nov. | Dec. | Year. |
|---|---|---|---|---|---|---|---|---|---|---|---|---|---|
| h. | ′ | ′ | ′ | ′ | ′ | ′ | ′ | ′ | ′ | ′ | ′ | ′ | ′ |
| 12 | 19·99 | 18·08 | 16·52 | 16·73 | 15·90 | 15·69 | 15·19 | 16·04 | 15·74 | 13·08 | 13·45 | 13·66 | 15·85 |
| 13 | 19·66 | 18·20 | 16·34 | 16·88 | 15·67 | 15·52 | 15·11 | 16·37 | 16·09 | 13·23 | 13·98 | 13·82 | 15·91 |
| 14 | 19·52 | 18·06 | 16·21 | 16·79 | 16·05 | 15·15 | 14·96 | 16·46 | 15·43 | 14·10 | 14·28 | 13·87 | 15·91 |
| 15 | 19·73 | 17·85 | 16·23 | 16·35 | 16·49 | 14·71 | 14·79 | 15·96 | 15·38 | 13·84 | 14·38 | 14·35 | 15·84 |
| 16 | 19·71 | 17·88 | 16·24 | 16·41 | 15·43 | 13·75 | 14·16 | 14·97 | 14·89 | 14·11 | 14·47 | 13·98 | 15·51 |
| 17 | 20·06 | 17·70 | 16·30 | 16·11 | 14·23 | 12·32 | 12·56 | 14·20 | 15·19 | 14·24 | 13·81 | 14·04 | 15·07 |
| 18 | 20·00 | 18·02 | 16·16 | 15·53 | 13·50 | 11·83 | 11·61 | 13·45 | 14·32 | 13·89 | 13·78 | 14·06 | 14·69 |
| 19 | 19·93 | 18·23 | 15·41 | 14·48 | 13·95 | 12·08 | 11·48 | 13·43 | 14·23 | 13·25 | 13·82 | 14·00 | 14·53 |
| 20 | 20·07 | 18·72 | 14·86 | 14·50 | 13·99 | 12·85 | 12·76 | 14·67 | 14·96 | 12·82 | 13·88 | 13·76 | 14·83 |
| 21 | 20·66 | 19·22 | 15·86 | 15·56 | 15·12 | 14·42 | 14·51 | 16·85 | 17·41 | 13·76 | 14·21 | 13·37 | 15·92 |
| 22 | 21·54 | 20·23 | 18·08 | 18·39 | 17·90 | 16·34 | 17·18 | 19·47 | 19·81 | 16·31 | 15·85 | 14·12 | 17·94 |
| 23 | 22·83 | 21·43 | 20·97 | 21·33 | 20·32 | 19·94 | 20·44 | 21·82 | 22·19 | 18·89 | 17·16 | 15·43 | 20·24 |
| 0 | 23·52 | 21·72 | 22·35 | 23·88 | 22·15 | 21·82 | 21·58 | 23·35 | 23·61 | 20·52 | 18·20 | 16·60 | 21·61 |
| 1 | 23·03 | 21·69 | 23·29 | 24·23 | 22·53 | 22·45 | 22·08 | 23·18 | 23·10 | 21·11 | 17·77 | 16·53 | 21·76 |
| 2 | 21·69 | 21·02 | 22·34 | 23·55 | 21·82 | 22·20 | 21·64 | 22·02 | 21·39 | 20·15 | 16·67 | 16·20 | 20·90 |
| 3 | 21·35 | 19·83 | 20·85 | 21·87 | 20·60 | 20·72 | 20·40 | 19·64 | 18·98 | 18·66 | 15·39 | 15·35 | 19·48 |
| 4 | 21·13 | 18·90 | 18·83 | 20·43 | 19·35 | 18·89 | 19·25 | 18·14 | 17·32 | 16·84 | 14·89 | 14·55 | 18·22 |
| 5 | 20·77 | 19·17 | 17·56 | 19·12 | 18·66 | 17·64 | 18·14 | 17·21 | 16·17 | 16·35 | 14·01 | 14·36 | 17·44 |
| 6 | 20·64 | 18·86 | 17·48 | 18·44 | 18·24 | 16·89 | 17·41 | 16·83 | 16·64 | 15·87 | 14·04 | 13·83 | 17·10 |
| 7 | 20·34 | 18·25 | 17·94 | 18·08 | 17·51 | 16·85 | 16·94 | 16·88 | 16·47 | 15·03 | 13·01 | 13·56 | 16·74 |
| 8 | 19·84 | 18·39 | 17·55 | 17·76 | 16·57 | 17·00 | 16·43 | 16·35 | 14·56 | 14·50 | 12·77 | 13·32 | 16·26 |
| 9 | 19·51 | 17·71 | 17·19 | 17·62 | 16·83 | 16·53 | 16·25 | 16·87 | 15·73 | 13·79 | 12·08 | 13·04 | 16·10 |
| 10 | 19·44 | 17·41 | 17·14 | 17·17 | 16·16 | 16·39 | 15·78 | 16·66 | 15·50 | 13·70 | 12·62 | 12·44 | 15·87 |
| 11 | 19·49 | 17·75 | 16·46 | 17·00 | 16·06 | 16·02 | 15·68 | 15·93 | 15·27 | 13·77 | 12·84 | 12·80 | 15·76 |

TABLE IX.—Hourly Means of Magnetic Declination for the Five Days least disturbed in each Month of 1844, corrected so that the Mean of each Five Days equals the Monthly Mean.

| Mak. M. T. | Jan. | Feb. | March. | April. | May. | June. | July. | Aug. | Sept. | Oct. | Nov. | Dec. | Year. |
|---|---|---|---|---|---|---|---|---|---|---|---|---|---|
| h. | ′ | ′ | ′ | ′ | ′ | ′ | ′ | ′ | ′ | ′ | ′ | ′ | ′ |
| 12 | 20·10 | 18·09 | 17·02 | 17·10 | 16·23 | 16·02 | 15·73 | 16·55 | 16·01 | 13·99 | 13·17 | 13·18 | 16·10 |
| 13 | 20·20 | 18·18 | 16·62 | 17·21 | 16·03 | 15·71 | 15·49 | 16·37 | 16·25 | 13·97 | 13·86 | 13·92 | 16·15 |
| 14 | 20·16 | 18·10 | 16·22 | 17·14 | 15·88 | 15·52 | 15·24 | 16·24 | 15·45 | 14·05 | 14·50 | 13·73 | 16·02 |
| 15 | 20·05 | 17·63 | 16·32 | 16·81 | 15·66 | 14·81 | 14·73 | 15·39 | 15·46 | 14·19 | 13·75 | 14·23 | 15·75 |
| 16 | 20·15 | 17·98 | 16·56 | 15·87 | 14·90 | 13·72 | 14·32 | 15·06 | 15·10 | 14·28 | 13·94 | 13·95 | 15·49 |
| 17 | 20·34 | 17·57 | 16·38 | 15·50 | 13·96 | 12·63 | 12·42 | 14·23 | 15·09 | 14·19 | 13·70 | 13·63 | 14·97 |
| 18 | 20·30 | 18·01 | 16·07 | 14·61 | 13·11 | 11·99 | 11·76 | 13·53 | 14·77 | 14·19 | 13·33 | 13·91 | 14·63 |
| 19 | 20·19 | 18·32 | 15·48 | 13·65 | 14·21 | 12·21 | 11·64 | 13·50 | 14·40 | 13·54 | 13·22 | 13·87 | 14·52 |
| 20 | 20·12 | 18·79 | 15·07 | 14·28 | 13·83 | 13·02 | 12·47 | 14·53 | 14·88 | 12·95 | 13·33 | 13·74 | 14·75 |
| 21 | 20·64 | 19·19 | 15·71 | 15·62 | 14·89 | 14·15 | 13·99 | 16·36 | 17·18 | 13·71 | 13·95 | 13·31 | 15·72 |
| 22 | 21·56 | 20·27 | 18·06 | 18·91 | 16·90 | 15·61 | 16·47 | 18·92 | 19·73 | 16·39 | 15·81 | 14·15 | 17·73 |
| 23 | 22·41 | 21·26 | 21·43 | 21·95 | 19·65 | 18·99 | 19·83 | 21·24 | 21·90 | 18·29 | 17·13 | 15·67 | 19·98 |
| 0 | 22·90 | 21·38 | 22·37 | 24·77 | 21·49 | 21·28 | 20·73 | 22·80 | 23·18 | 19·95 | 18·09 | 16·42 | 21·28 |
| 1 | 22·49 | 21·20 | 23·25 | 24·77 | 22·08 | 22·09 | 21·51 | 22·89 | 22·73 | 20·27 | 17·93 | 16·59 | 21·48 |
| 2 | 21·53 | 20·56 | 21·84 | 23·79 | 21·65 | 21·88 | 21·13 | 22·11 | 20·90 | 19·40 | 16·63 | 16·16 | 20·63 |
| 3 | 21·07 | 19·67 | 20·13 | 21·79 | 21·14 | 20·75 | 20·32 | 20·28 | 18·66 | 17·81 | 15·42 | 14·99 | 19·34 |
| 4 | 21·02 | 19·23 | 18·56 | 20·29 | 19·90 | 18·74 | 19·28 | 18·61 | 17·03 | 16·49 | 14·99 | 14·57 | 18·23 |
| 5 | 20·60 | 19·15 | 17·63 | 18·85 | 19·23 | 17·83 | 18·36 | 17·52 | 15·80 | 15·94 | 14·43 | 14·44 | 17·48 |
| 6 | 20·30 | 18·76 | 17·56 | 18·32 | 18·73 | 17·24 | 17·76 | 16·87 | 16·68 | 15·73 | 14·16 | 14·17 | 17·19 |
| 7 | 20·06 | 18·28 | 17·52 | 18·03 | 18·12 | 17·32 | 17·43 | 16·99 | 16·13 | 15·28 | 13·33 | 13·78 | 16·86 |
| 8 | 19·79 | 18·39 | 17·36 | 17·50 | 17·29 | 17·23 | 17·21 | 16·69 | 15·12 | 14·49 | 13·60 | 13·52 | 16·52 |
| 9 | 19·23 | 18·30 | 17·27 | 17·59 | 17·37 | 16·39 | 16·48 | 17·24 | 16·22 | 14·48 | 12·74 | 13·06 | 16·36 |
| 10 | 19·25 | 17·82 | 17·00 | 17·30 | 16·52 | 16·38 | 15·97 | 16·71 | 15·90 | 14·08 | 13·06 | 12·86 | 16·07 |
| 11 | 20·02 | 18·13 | 16·78 | 17·11 | 16·44 | 16·28 | 15·89 | 15·95 | 15·79 | 14·05 | 13·15 | 13·01 | 16·05 |

The means of the observations made on the 60 days selected, representing the mean diurnal variation for the year, give the following result:—

The north end of the declination magnet is farthest west at $0^h\ 45^m$ P.M.; it then moves easterly, the velocity of motion being nearly constant till $5^h$ P.M., after which it moves more slowly in the same direction till $11^h\ 10^m$ P.M., having moved altogether through 5′·5; from $11^h\ 10^m$ P.M. till $1^h$ A.M., it moves westerly through 0′·10; after $1^h$ A.M. it again moves toward the east, attaining its farthest easterly position at $7^h\ 0^m$ A.M., having moved 1′·6 between $1^h$ and $7^h$ A.M. After $7^h$, it returns 7′·0 to its farthest westerly position at $0^h\ 45^m$ P.M. It will be observed, that this result differs from that obtained by means of the whole series, in placing the principal minimum in the morning, and in nearly obliterating the secondary maximum and minimum. The mean for the 120 days gives nearly the same result as that obtained from the 60 days' observations; the former places the secondary maximum about $1^h\ 40^m$ A.M., and gives 0′·15 as the amount of motion from the position of secondary minimum to that of secondary maximum. Although the secondary maximum were wholly wanting, there would still be distinct evidence of the action of a secondary cause in the inflections of the curve. Other differences between the results for the 60 days, and for the whole series, will be indicated immediately.

The following Table contains the epochs of maxima and minima, deduced from the monthly means for the 10 days and 5 days respectively.

TABLE X.—Epochs of Maxima and Minima of Magnetic Declination, obtained from the Ten-Day and Five-Day series of observations.

| Month. | 10 Days. | | | | 5 Days. | | | |
|---|---|---|---|---|---|---|---|---|
| | Max. | Min. | Max. | Min. | Max. | Min. | Max. | Min. |
| | h. m. | h. m. | h. m. | h. m. | h. m. | h. m. | h. m. | h. m. |
| January | 0 10 P.M. | −10 0 P.M. | ? | 8 0? A.M. | 0 10 P.M. | − 9 40 P.M. | 2 0? A.M. | 8 0? A.M. |
| February | 0 30 ... | −10 0 ... | 1 0 A.M. | 5 0? ... | 0 0 ... | −10 10 ... | 1 0 ... | −5 0 ... |
| March | 1 10 ... | (6 0)?... | ..... | −8 10 ... | 1 0 ... | ..... | ..... | −8 10 ... |
| April | 1 0 ... | ..... | ..... | −7 30 ... | 0 40 ... | 11 0 ... | 1 0 ... | −7 10 ... |
| May | 1 10 ... | (6 0) ... | 3 0 ... | −6 20 ... | 1 0 ... | ..... | ..... | −6 10 ... |
| June | 1 20 ... | (6 0) ... | ..... | −6 10 ... | 1 20 ... | ..... | ..... | −6 20 ... |
| July | 1 10 ... | ..... | ..... | −6 40 ... | 1 20 ... | ..... | ..... | −6 50 ... |
| August | 0 30 ... | 9 0? ... | 2 0 ... | −6 40 ... | 0 40 ... | ..... | ..... | −6 40 ... |
| September | 0 20 ... | 8 0? ... | 1 0 ... | −6 40 ... | 0 30 ... | 8 0?... | 1 0 ... | −7 20 ... |
| October | 1 0 ... | 12 0 ... | 4 0 ... | −8 0 ... | 0 50 ... | 12 0 ... | 4 0 ... | −8 10 ... |
| November | 0 20 ... | − 9 10 ... | 4 0 ... | 7 0 ... | 0 30 ... | − 9 10 ... | 2 0 ... | 7 10 ... |
| December | 0 30 ... | −10 10 ... | 4 0 ... | 9 10 ... | 1 0 ... | −10 10 ... | 3 0 ... | 9 10 ... |

The epochs for both series are nearly the same; considering the 5-day series as most free from the effect of intermittent disturbances, we find the same law to hold with respect to the varying epoch of the principal maximum as has already been found from the whole series. The principal minimum occurs between $9^h$ and $10^h$ P.M. in the four months of November, December, January, February, and it is only in these months that two maxima and two minima are distinctly marked; in November and February the minima are nearly of equal value. The minimum in the remaining 8 months occurs between $6^h$ and $9^h$ A.M.

*Ranges of Mean Diurnal Variation.*—The following are the ranges of the monthly mean diurnal variation, as deduced from all the hourly observations, from the hourly observations in the 10 days and in the 5 days least affected by disturbances.

| | Jan. | Feb. | March. | April. | May. | June. | July. | Aug. | Sept. | Oct. | Nov. | Dec. |
|---|---|---|---|---|---|---|---|---|---|---|---|---|
| All, . | 5′·26 | 6′·36 | 9′·94 | 10′·20 | 8′·96 | 11′·05 | 10′·06 | 10′·31 | 9′·95 | 10′·94 | 9′·28 | 5′·96 |
| 10 days, | 4′·08 | 4′·31 | 8′·43 | 9′·75 | 9′·03 | 10′·62 | 10′·60 | 9′·92 | 9′·38 | 8′·29 | 6′·12 | 4′·16 |
| 5 days, | 3′·67 | 3′·81 | 8′·18 | 11′·12 | 8′·97 | 10′·10 | 9′·87 | 9′·39 | 8′·78 | 7′·32 | 5′·35 | 3′·71 |

In each case, the ranges for the months from March to October, both inclusive, vary but little, and that irregularly. The ranges for the undisturbed variations change considerably between February and March, and October and December; and the ranges for the four months, November, December, January, and February, do not differ greatly. The range for November from the whole observations, is considerably more than its average value at Makerstoun.

TABLE XI.—Variations of Magnetic Declination with reference to the Moon's Hour-Angle for each Lunation, for the Six Summer and Six Winter Lunations, and for the whole Twelve Lunations of 1844.

| Moon's Hour-Angle. | Lunations. | | | | | | | | | | | | | | |
|---|---|---|---|---|---|---|---|---|---|---|---|---|---|---|---|
| | 1st. | 2d. | 3d. | 4th. | 5th. | 6th. | 7th. | 8th. | 9th. | 10th. | 11th. | 12th. | Summer. | Winter. | Year. |
| h. | ′ | ′ | ′ | ′ | ′ | ′ | ′ | ′ | ′ | ′ | ′ | ′ | ′ | ′ | ′ |
| 0 | 1·63 | 1·55 | 0·65 | 1·07 | 1·04 | 0·81 | 1·27 | 1·13 | 0·00 | 1·69 | 0·39 | 1·02 | 0·50 | 0·58 | 0·32 |
| 1 | 1·26 | 1·08 | 2·41 | 0·29 | 1·99 | 1·06 | 1·28 | 1·40 | 0·42 | 2·59 | 0·42 | 1·02 | 0·82 | 0·76 | 0·57 |
| 2 | 1·67 | 0·63 | 1·59 | 0·74 | 0·98 | 1·20 | 0·97 | 0·65 | 1·01 | 3·22 | 0·00 | 0·00 | 0·54 | 0·62 | 0·36 |
| 3 | 1·82 | 1·18 | 2·80 | 2·05 | 1·93 | 1·23 | 0·55 | 1·68 | 1·89 | 3·13 | 2·05 | 0·27 | 1·24 | 1·26 | 1·03 |
| 4 | 1·54 | 1·33 | 1·68 | 1·66 | 1·54 | 0·98 | 0·57 | 0·96 | 1·30 | 3·33 | 1·64 | 1·37 | 1·17 | 0·87 | 0·80 |
| 5 | 1·17 | 0·91 | 1·62 | 0·50 | 1·15 | 0·72 | 0·27 | 1·91 | 0·66 | 3·74 | 3·00 | 1·61 | 1·36 | 0·56 | 0·74 |
| 6 | 1·11 | 0·68 | 1·50 | 0·94 | 1·16 | 0·32 | 0·06 | 2·00 | 0·52 | 3·41 | 2·13 | 2·18 | 1·19 | 0·53 | 0·64 |
| 7 | 1·02 | 1·43 | 0·68 | 0·97 | 1·21 | 0·38 | 0·25 | 1·50 | 1·67 | 3·95 | 2·97 | 1·78 | 1·33 | 0·70 | 0·79 |
| 8 | 0·86 | 0·51 | 0·97 | 0·87 | 0·00 | 0·57 | 0·59 | 1·25 | 1·32 | 3·95 | 2·99 | 2·27 | 1·28 | 0·47 | 0·65 |
| 9 | 1·20 | 1·47 | 0·53 | 0·43 | 0·45 | 0·00 | 0·80 | 1·61 | 1·35 | 4·49 | 2·38 | 2·25 | 1·41 | 0·47 | 0·72 |
| 10 | 0·67 | 1·15 | 1·27 | 0·20 | 1·04 | 0·26 | 1·07 | 1·62 | 1·73 | 4·75 | 2·90 | 1·75 | 1·45 | 0·68 | 0·84 |
| 11 | 0·49 | 0·75 | 1·69 | 0·77 | 0·88 | 0·45 | 1·32 | 1·77 | 2·26 | 4·82 | 2·92 | 1·97 | 1·47 | 0·94 | 0·99 |
| 12 | 0·72 | 1·22 | 1·61 | 0·72 | 0·97 | 1·22 | 1·64 | 1·73 | 2·55 | 4·13 | 2·82 | 1·98 | 1·44 | 1·17 | 1·08 |
| 13 | 1·27 | 0·94 | 1·68 | 0·68 | 0·95 | 0·46 | 1·20 | 1·87 | 2·31 | 3·04 | 3·24 | 2·01 | 1·38 | 0·94 | 0·94 |
| 14 | 1·44 | 1·50 | 1·49 | 0·70 | 1·12 | 0·23 | 0·63 | 1·86 | 2·11 | 1·89 | 2·87 | 2·40 | 1·27 | 0·81 | 0·82 |
| 15 | 1·36 | 0·91 | 0·22 | 0·10 | 1·17 | 0·16 | 0·54 | 1·33 | 1·73 | 3·33 | 3·21 | 1·58 | 1·12 | 0·54 | 0·61 |
| 16 | 1·00 | 1·51 | 0·35 | 0·00 | 0·33 | 0·30 | 0·36 | 0·21 | 0·64 | 2·08 | 3·36 | 1·46 | 0·97 | 0·00 | 0·27 |
| 17 | 1·43 | 1·24 | 0·62 | 0·01 | 0·40 | 0·92 | 0·55 | 0·96 | 0·99 | 2·02 | 2·79 | 1·23 | 0·90 | 0·33 | 0·40 |
| 18 | 1·77 | 1·27 | 1·04 | 0·67 | 0·90 | 0·66 | 0·40 | 0·00 | 1·11 | 1·93 | 1·67 | 0·69 | 0·74 | 0·32 | 0·31 |
| 19 | 0·75 | 0·00 | 0·00 | 1·37 | 0·69 | 0·60 | 0·00 | 0·58 | 0·65 | 1·05 | 2·51 | 0·20 | 0·10 | 0·35 | 0·00 |
| 20 | 0·27 | 1·00 | 1·72 | 1·61 | 0·72 | 0·81 | 1·04 | 1·33 | 0·45 | 2·07 | 1·02 | 1·13 | 0·55 | 0·69 | 0·40 |
| 21 | 0·80 | 0·51 | 0·11 | 2·04 | 0·92 | 0·73 | 1·00 | 1·51 | 0·26 | 0·43 | 1·58 | 0·55 | 0·00 | 0·77 | 0·17 |
| 22 | 0·92 | 2·12 | 0·11 | 1·19 | 0·57 | 0·57 | 0·67 | 1·17 | 0·30 | 1·93 | 1·63 | 1·27 | 0·68 | 0·44 | 0·34 |
| 23 | 0·00 | 1·04 | 1·76 | 0·91 | 0·57 | 0·77 | 1·69 | 1·15 | 1·65 | 1·46 | 1·27 | 0·48 | 0·35 | 0·82 | 0·37 |
| 24 | 0·04 | 0·48 | 1·05 | 0·53 | 1·81 | 1·06 | 1·25 | 1·19 | 0·25 | 0·00 | 2·15 | 0·26 | 0·00 | 0·70 | 0·13 |

Table XI. has been formed from the hourly observations between January 6 and December 24, 1844, including 12 complete synodical revolutions of the moon. In each lunation, the hourly observations nearest the moon's transit of the meridian, were summed as 0, the next following as 1, and so on up to 23 or 24; when only 24 observations occurred between two successive transits, the observation nearest the second of the two transits was summed both as 24 and 0. The numbers in the first column are, therefore, $\frac{1}{24}$ths of the moon's hour angle from the meridian.

*Diurnal Variation with reference to the Moon's Hour-Angle.*—The separate lunations present considerable irregularities, as might be expected where the range of the variations is so small; an inspection, however, of the separate results, renders it extremely probable that the law of variation is somewhat different for the lunations in which the moon is in opposition north of the equator, and for those in which it is in opposition south of the equator. The variations have accordingly been determined for these two groups, namely, for the 1st, 2d, 3d, 10th, 11th, and 12th lunations, and for the remaining 6 summer lunations. In order to destroy the minor irregularities, the following means of variations are deduced, the mean for the moon on the meridian ($0^h$) being the mean of the three values for 24, 0, and 1, in the previous Table, and each of the other values being the mean of two:—

| Groups. | $0^h\ 0^m$ | $2^h\ 25^m$ | $4^h\ 20^m$ | $6^h\ 15^m$ | $8^h\ 10^m$ | $10^h\ 5^m$ | $12^h\ 0^m$ | $13^h\ 55^m$ | $15^h\ 50^m$ | $17^h\ 45^m$ | $19^h\ 40^m$ | $21^h\ 35^m$ |
|---|---|---|---|---|---|---|---|---|---|---|---|---|
| Winter, | 0′·24 | 0′·62 | 0′·99 | 0′·99 | 1′·07 | 1′·19 | 1′·18 | 0′·92 | 0′·66 | 0′·15 | 0′·00 | 0′·24 |
| Summer, | 0′·52 | 0′·78 | 0′·55 | 0′·45 | 0′·31 | 0′·65 | 0′·89 | 0′·51 | 0′·00 | 0′·17 | 0′·57 | 0′·45 |
| 1844, | 0′·22 | 0′.54 | 0′·62 | 0′·56 | 0′·53 | 0′·76 | 0′·88 | 0′·56 | 0′·18 | 0′·00 | 0′·13 | 0′·19 |

When the moon, therefore, is in opposition north of the equator, the diurnal variation of the magnetic declination due to its varying hour-angle consists of a maximum of westerly declination when the moon's

hour-angle is $11^h$, or an hour before its inferior transit, and of a minimum of westerly declination $4^h\ 30^m$ before its superior transit. The range of the variations is less than 1′·5.

When the moon is in opposition south of the equator, the variation is double,—there are two maxima and two minima; the maxima have nearly equal values, one occurring immediately before the moon's transit of the inferior meridian, the other about $2^h\ 25^m$ after the superior transit. The principal minimum occurs about $4^h\ 30^m$ after the inferior transit, and the secondary minimum about $4^h$ before it. The range of the variations is about 1′·0.

In the means for the whole 12 lunations, there are also two maxima and two minima; the principal maximum occurs about half an hour before the moon's inferior transit, and the principal minimum about 6 hours before the superior transit; the secondary maximum occurs about $4^h\ 20^m$ after the superior transit, and the secondary minimum about 4 hours before the inferior transit. The range of the variations is about 1′·0.

When we compare these results, with those already obtained for the sun's hour-angle, we find, that whereas the diurnal variation due to the sun has its greatest range in the summer half-year, the reverse is the case for that due to the moon which is greatest in the winter. It should be remembered, however, that in several respects the winter is to us for the moon, what the summer is for the sun. In winter, we have the greatest amount of moonshine when the moon is north of the equator. In winter, the moon is in opposition to the sun, when the former is north, and the latter south, of the equator; whereas it is the sun which is north, and the moon south, of the equator, at opposition in summer. It does not seem improbable, then, that the diurnal variation due to the moon may have a variable character through each lunation, in a manner analogous to the change of the solar diurnal variation from summer to winter, from the greatest north to the greatest south declination. If this be the case, the lunar diurnal variation will not be eliminated in the usual summations for the solar diurnal variation, and, in such a fact, we might find some explanation of the secondary maximum which is exhibited most distinctly in the solar diurnal variation for winter.

The minimum of westerly declination occurs when the sun and moon are on the same declination circle, —that is, about 5 or 6 hours before the superior transit; but the maximum occurs for the moon when near its inferior transit, and for the sun when past its superior transit.

Several of the *single* lunations shew the results given above with considerable accuracy, and the verity of the results has been confirmed by the discussion of the observations for 1845, which will be found in its proper place.

*Intermittent Disturbances.*

Since in the process of selecting the series of 120 and 60 days, those days only were adopted which were free from all large disturbance, the 60-day series probably being nearly free from disturbance even of the smallest class, it is evident that the differences between the means for these series and the means for the whole series of observations should indicate the law, and approximately the amount, by which intermittent disturbances affect the continuous variations. The following are results of the comparisons of the undisturbed series with the complete series :—

*Effect of Intermittent Disturbances on the Yearly Mean Declination.*

| | | |
|---|---|---|
| The mean declination for 1844, deduced from the whole series of hourly observations, | | = 25°·17′·06 W. |
| ..... | 120 days ..... | = 25°·17′·08 ... |
| ..... | 60 ... ..... | = 25°·17′·06 ... |

This remarkable result proves that intermittent disturbances have no effect on the mean position of the declination magnet for the year; and, therefore, that in the course of the year the integrals of the disturbing forces are equally positive and negative.

*Effect on the Monthly Mean of Declination.*—If the days selected had been regularly distributed over each month, this result might have been expected with some accuracy; this regularity of distribution, however, could not be obtained in consistence with the other condition of freedom from irregularity; and the means for the selected days in each month may be expected to differ from the true mean, were it from the effect of secular change alone. The differences are small even with this drawback. The *average* difference (independent of sign) of the mean for the 10-day series from the true monthly means being only 0′·1, the greatest difference being 0′·2; and for the 5-day series, the average difference is 0′·2, and the greatest 0′·46. It seems therefore very probable that the effect of intermittent disturbances upon the mean position of the magnetic needle for a month is also zero.

A comparison of the daily means renders it extremely probable that were a sufficient number of observations made use of to obtain the true mean on days of much disturbance, the results would not differ more from the means for undisturbed days at the same epoch than would be accounted for by the regular laws of variation.

*Effect of Intermittent Disturbances on the Hourly Means of Declination.*—The following Tables contain the differences, for each month, of the hourly means obtained for the whole hourly observations, from those for the selected series of 10 days and 5 days.

TABLE XII.—Differences of the Hourly Means of Magnetic Declination, as deduced from the whole Series, and the Ten-Day Series selected in each Month; or Table V. *minus* Table VIII.

| Mak. M. T. | Jan. | Feb. | March. | April. | May. | June. | July. | Aug. | Sept. | Oct. | Nov. | Dec. | Year. |
|---|---|---|---|---|---|---|---|---|---|---|---|---|---|
| h. | ′ | ′ | ′ | ′ | ′ | ′ | ′ | ′ | ′ | ′ | ′ | ′ | ′ |
| 12 | −0·54 | −0·69 | −1·30 | +0·26 | −1·63 | +0·08 | −0·21 | −0·90 | −0·41 | +0·15 | −1·90 | −0·82 | −0·67 |
| 13 | −0·08 | +0·07 | −0·09 | −1·02 | −0·47 | −0·15 | −0·24 | −0·64 | −0·63 | −0·29 | −1·41 | −1·06 | −0·50 |
| 14 | +0·11 | +0·11 | +0·75 | −0·51 | −0·19 | −0·36 | −0·41 | −1·42 | −0·08 | −0·18 | +0·10 | −0·23 | −0·19 |
| 15 | +0·61 | +0·08 | −0·38 | −0·34 | −0·66 | −0·46 | −0·29 | −1·11 | −0·59 | +1·21 | −0·17 | +0·07 | −0·17 |
| 16 | +0·25 | −0·40 | +0·68 | −0·33 | +0·19 | −0·50 | −0·43 | −0·78 | −0·41 | +1·25 | −0·63 | 0·00 | −0·10 |
| 17 | −0·20 | +0·04 | +0·26 | −0·07 | +0·71 | −0·16 | −0·18 | +0·20 | +0·23 | +1·33 | +0·36 | −0·13 | +0·19 |
| 18 | +0·49 | −0·09 | +1·08 | +0·51 | +0·48 | −0·12 | +1·04 | +0·87 | +1·12 | +1·85 | +0·21 | +0·19 | +0·63 |
| 19 | +0·59 | +0·20 | +1·33 | +1·21 | −0·20 | +0·15 | +1·28 | +0·48 | +1·18 | +1·61 | +1·07 | +0·07 | +0·74 |
| 20 | +0·35 | +0·01 | +1·90 | +1·27 | +0·56 | +0·25 | +1·09 | +0·85 | +0·73 | +1·64 | +1·46 | +0·42 | +0·87 |
| 21 | +0·47 | +0·07 | +1·87 | +1·64 | +0·70 | +0·60 | +0·94 | +0·81 | +0·12 | +1·84 | +1·50 | +1·13 | +0·97 |
| 22 | +0·54 | +0·64 | +1·62 | +0·95 | +0·45 | +0·70 | +0·44 | +0·23 | +0·59 | +1·60 | +1·15 | +1·07 | +0·83 |
| 23 | +0·01 | +0·67 | +0·87 | +0·53 | +0·51 | +0·46 | −0·22 | +0·37 | +0·94 | +0·96 | +1·42 | +0·91 | +0·61 |
| 0 | +0·17 | +0·72 | +0·70 | +1·17 | +0·08 | +0·27 | +0·15 | +0·87 | +0·16 | +0·96 | +1·59 | +1·04 | +0·66 |
| 1 | +0·16 | +0·64 | +0·86 | +0·72 | +0·18 | +0·31 | +0·36 | +0·88 | +0·24 | +0·11 | +1·43 | +0·78 | +0·55 |
| 2 | +0·78 | +0·96 | +0·02 | +0·63 | +0·52 | +0·05 | −0·06 | +0·89 | +0·69 | −0·35 | +1·54 | +0·32 | +0·49 |
| 3 | +0·34 | +0·85 | +0·02 | +0·78 | +0·77 | +0·26 | +0·18 | +0·60 | +0·56 | −0·67 | +1·30 | −1·06 | +0·33 |
| 4 | +0·29 | +0·54 | +0·48 | +0·37 | +0·62 | +0·31 | −0·33 | +0·89 | +0·18 | −0·44 | +0·79 | +0·17 | +0·31 |
| 5 | +0·09 | +0·33 | −1·11 | −0·53 | +0·19 | +0·14 | −0·04 | +0·53 | +0·34 | −1·01 | +1·10 | +0·24 | +0·01 |
| 6 | −0·40 | +0·37 | −1·94 | −1·00 | +0·07 | +0·09 | +0·01 | +0·02 | −1·66 | −0·94 | −3·11 | +0·67 | −0·65 |
| 7 | −0·40 | −0·19 | −1·26 | −1·28 | +0·12 | −0·07 | −1·08 | −0·27 | −2·12 | −0·91 | −1·35 | +0·07 | −0·73 |
| 8 | −1·15 | −1·63 | −1·88 | −0·37 | −0·55 | −0·45 | −0·41 | −0·43 | −0·74 | −3·96 | −2·26 | −1·55 | −1·30 |
| 9 | −1·08 | −1·25 | −0·90 | −1·07 | −0·33 | −0·25 | −0·40 | −1·67 | −0·30 | −1·98 | −1·18 | −0·72 | −0·93 |
| 10 | −0·91 | −1·33 | −1·41 | −1·23 | −0·50 | −0·63 | −0·57 | −1·23 | −0·37 | −1·89 | −1·06 | −0·46 | −0·97 |
| 11 | −0·60 | −0·61 | −2·25 | −2·15 | −1·49 | −0·65 | −0·68 | −0·17 | +0·26 | −2·03 | −1·93 | −1·12 | −1·12 |

TABLE XIII.—Differences of the Hourly Means of Magnetic Declination, as deduced from the whole series and the Five-Day series selected in each Month; or Table V. *minus* Table IX.

| Mak. M. T. | Jan. | Feb. | March. | April. | May. | June. | July. | Aug. | Sept. | Oct. | Nov. | Dec. | Year. |
|---|---|---|---|---|---|---|---|---|---|---|---|---|---|
| h. | ′ | ′ | ′ | ′ | ′ | ′ | ′ | ′ | ′ | ′ | ′ | ′ | ′ |
| 12 | −0·65 | −0·70 | −1·80 | −0·09 | −1·96 | −0·25 | −0·75 | −1·41 | −0·68 | −0·76 | −1·62 | −0·34 | −0·92 |
| 13 | −0·62 | +0·09 | −0·37 | −1·33 | −0·83 | −0·34 | −0·62 | −0·64 | −0·79 | −1·03 | −1·29 | −1·16 | −0·74 |
| 14 | −0·53 | +0·07 | +0·74 | −0·84 | −0·02 | −0·73 | −0·69 | −1·20 | −0·10 | −0·13 | −0·12 | −0·09 | −0·30 |
| 15 | +0·29 | +0·30 | −0·47 | −0·78 | +0·17 | −0·56 | −0·23 | −0·54 | −0·67 | +0·86 | +0·46 | +0·19 | −0·08 |
| 16 | −0·19 | −0·50 | +0·36 | +0·23 | +0·72 | −0·47 | −0·59 | −0·87 | −0·62 | +1·08 | −0·10 | +0·03 | −0·08 |
| 17 | −0·48 | +0·17 | +0·18 | +0·56 | +0·98 | −0·47 | −0·04 | +0·17 | +0·33 | +1·38 | +0·47 | +0·28 | +0·29 |
| 18 | +0·19 | −0·08 | +1·17 | +1·45 | +0·87 | −0·28 | +0·89 | +0·79 | +0·67 | +1·55 | +0·66 | +0 34 | +0·69 |
| 19 | +0·33 | +0·12 | +1·26 | +2·06 | −0·46 | +0·02 | +1·12 | +0·41 | +1·01 | +1·32 | +1·67 | +0·20 | +0·75 |
| 20 | +0·30 | −0·06 | +1·69 | +1·51 | +0·70 | +0·08 | +1·38 | +0·99 | +0·81 | +1·51 | +2·01 | +0·44 | +0·95 |
| 21 | +0·49 | +0·10 | +2·02 | +1·60 | +0·93 | +0·87 | +1·46 | +1·30 | +0·35 | +1·89 | +1·76 | +1·19 | +1·17 |
| 22 | +0·52 | +0·60 | +1·64 | +0·45 | +1·45 | +1·43 | +1·15 | +0·78 | +0·67 | +1·52 | +1·19 | +1·04 | +1·04 |
| 23 | +0·43 | +0·84 | +0·41 | −0·07 | +1·18 | +1·41 | +0·39 | +0·95 | +1·23 | +1 56 | +1·45 | +0·67 | +0·87 |
| 0 | +0·79 | +1·06 | +0·68 | +0·30 | +0·74 | +0·81 | +1·00 | +1·42 | +0·59 | +1·53 | +1·70 | +1·22 | +0·99 |
| 1 | +0·70 | +1·13 | +0·90 | +0·20 | +0·63 | +0·67 | +0·93 | +1·17 | +0·61 | +0·94 | +1·27 | +0·72 | +0·83 |
| 2 | +0·94 | +1·42 | +0·52 | +0·41 | +0·69 | +0·37 | +0·45 | +0·80 | +1·18 | +0·40 | +1·58 | +0·36 | +0·76 |
| 3 | +0·62 | +1·01 | +0·74 | +0·88 | +0·23 | +0·33 | +0·26 | −0·04 | +0·88 | +0·18 | +1·27 | −0·70 | +0·47 |
| 4 | +0·40 | +0·21 | +0·75 | +0·53 | +0·07 | +0·46 | −0·36 | +0·42 | +0·47 | −0·09 | +0·69 | +0·17 | +0·30 |
| 5 | +0·26 | +0·35 | −1·18 | −0·24 | −0·38 | −0·07 | −0·26 | +0·22 | +0·71 | −0·60 | +0·68 | +0·16 | −0·03 |
| 6 | −0·06 | +0·47 | −2·02 | −0·86 | −0·42 | −0·26 | −0·34 | −0·02 | −1·70 | −0·80 | −3·23 | +0·33 | −0·74 |
| 7 | −0·12 | −0·22 | −0·84 | −1·21 | −0·49 | −0·54 | −1·57 | −0·38 | −1·78 | −1·16 | −1·67 | −0·15 | −0·85 |
| 8 | −1·10 | −1·63 | −1·69 | −0·19 | −1·27 | −0·68 | −1·19 | −0·77 | −1·30 | −3·95 | −3·09 | −1·75 | −1·56 |
| 9 | −0·80 | −1·84 | −0·98 | −1·02 | −0·87 | −0·11 | −0·63 | −2·04 | −0·79 | −2·67 | −1·84 | −0·74 | −1·19 |
| 10 | −0·72 | −1·74 | −1·27 | −1·34 | −0·86 | −0·62 | −0·76 | −1·28 | −0·77 | −2·27 | −1·50 | −0·88 | −1·17 |
| 11 | −1·13 | −0·99 | −2·57 | −2·24 | −1·87 | −0·91 | −0·89 | −0·19 | −0·26 | −2·31 | −2·24 | −1·33 | −1·41 |

Considering first the differences of the hourly means for the entire year, as obtained from a comparison of the whole with the 60-day series, we obtain the following result :—

The mean effect of disturbance is a maximum twice in the 24 hours; it is a negative maximum between $8^h$ and $11^h$ P.M., and it is a positive maximum between $9^h$ and $10^h$ A.M. The mean effect of disturbance is also a minimum twice in the day; it is a minimum between $4^h$ and $5^h$ A.M., and between $4^h$ and $5^h$ P.M. This result may be stated more generally thus :—In the afternoon at Makerstoun, when the sun is on the magnetic prime vertical, the mean disturbance of magnetic declination is zero; it increases till the sun makes its inferior transit of the magnetic meridian, when it is a maximum, and diminishes from thence till the sun is again on the magnetic prime vertical to the east; during this period the disturbance has been wholly towards the east (or negative when *westerly* declination is considered). After this, the mean effect of disturbance again increases, but in the opposite direction, being wholly to the west; it becomes a maximum when the sun transits the magnetic meridian, after which it diminishes to zero at the transit of the magnetic prime vertical.

This law will be found to hold with more or less regularity, depending on the nature of the disturbance in each month of the year.

The approximate value of the positive maximum of the mean effect of disturbance = 1′·2
..... negative ..... = 1′·6

The results now given are deduced from the comparison of the whole series with the 60-day series; the comparison of the former with the 120-day series gives precisely the same law, but, as might be expected, not exactly the same values. As has been already stated, the 60-day series is nearly free from even the smallest irregularities; but this is not the case with the remaining 60 days which complete the 120-day series; these are affected by some small disturbances. It is quite possible that the smaller irregularities may obey some other law than that of the larger; if so, it should be exhibited by the differences of the means for the 120-day series (which is affected by the smaller irregularities), and for the 60-day series (which is nearly free of them). These differences are as follow :—Means for 120 days, *minus* means for 60 days.

| $12^h$ | $13^h$ | $14^h$ | $15^h$ | $16^h$ | $17^h$ | $18^h$ | $19^h$ | $20^h$ | $21^h$ | $22^h$ | $23^h$ |
|---|---|---|---|---|---|---|---|---|---|---|---|
| −0′·25 | −0′·24 | −0′·21 | +0′·09 | +0′·02 | +0′·10 | +0′·06 | +0′·01 | +0′·08 | +0·20 | +0′·21 | +0′·26 |

| $0^h$ | $1^h$ | $2^h$ | $3^h$ | $4^h$ | $5^h$ | $6^h$ | $7^h$ | $8^h$ | $9^h$ | $10^h$ | $11^h$ |
|---|---|---|---|---|---|---|---|---|---|---|---|
| +0′·33 | +0′·28 | +0′·27 | +0′·14 | −0′·01 | −0′·04 | −0′·09 | −0′·12 | −0′·26 | −0′·26 | −0′·20 | −0′·29 |

The law, it will be observed, is still nearly the same, the difference in the epochs being altogether trifling, when the smallness of the quantities is considered. From this, then, it appears extremely probable that the smallest irregularities obey the same diurnal law as the larger, if not the largest. Few, if any, of the largest disturbances occurred in 1844; it is probably on this account that the general laws of disturbances are shewn with so much regularity in that year; a regularity which one or two of the largest disturbances would have destroyed, and which could only be obtained again by grouping several years' observation. It is extremely probable, however, since the smallest and the larger disturbances obey the same law, that the largest will not be found an exception when a sufficient number of them are included in the discussion.

It is obvious, that by selecting the five days of next greatest regularity in each month and the next five, series of means would be obtained representing the diurnal variation, for all the days in each month, for 20, 15, 10, and 5 days, in each of which series the effect of disturbance would become less and less; in this way, by a method of limits, we might approximate to the normal form of the diurnal variation.

In the previous investigation, only the mean effect of disturbance on the normal position has been considered, we are therefore still ignorant of the law of the mean disturbance, for it is evident that the effect of disturbance on the true position may be zero when the mean disturbance is a maximum, the value of the former depending principally on the positive and negative distribution of the individual disturbances with respect to the mean position.

At first, in order to obtain the mean disturbances, the difference was taken of each observation from the monthly mean of all the observations at the corresponding hours: as it has been shewn that the arithmetical mean of all the observations is not the normal mean, or mean independent of disturbance, this process is somewhat inaccurate; it has, however, been employed at first, as the investigation of the differences of the individual observations from their arithmetical mean is important in other respects: when greater accuracy is possible, allowance should be made for the variation of the daily means due to regular and continuous laws, such as annual and secular variations.

The following Table contains the hourly means of the differences for each day in 1844 :—

TABLE XIV.—Mean difference of a Single Observation from the Monthly Mean at the corresponding hour, for each Civil Day in 1844.

| Civil. Day. | Jan. | Feb. | March. | April. | May. | June. | July. | Aug. | Sept. | Oct. | Nov. | Dec. |
|---|---|---|---|---|---|---|---|---|---|---|---|---|
| | ′ | ′ | ′ | ′ | ′ | ′ | ′ | ′ | ′ | ′ | ′ | ′ |
| 1 | 1·49 | 2·69 | 1·40 | 2·46 | 2·53 | 1·16 | 1·62 | 2·97 | [1·72] | 7·79 | 1·65 | [1·94] |
| 2 | 1·45 | 1·51 | 2·35 | 2·43 | 1·36 | [1·08] | 1·25 | 2·31 | 1·28 | 2·35 | 2·19 | 1·09 |
| 3 | 0·72 | 1·75 | [2·61] | 2·66 | 2·05 | 1·01 | 1·00 | 1·87 | 1·28 | 1·94 | [1·82] | 0·68 |
| 4 | 0·74 | [2·05] | 3·62 | 1·79 | 1·05 | 1·11 | 1·25 | [2·11] | 1·30 | 1·62 | 2·20 | 2·61 |
| 5 | 2·57 | 2·17 | 3·03 | 1·54 | [1·57] | 0·74 | 0·74 | 2·34 | 1·00 | 1·38 | 1·68 | 1·44 |
| 6 | 2·76 | 1·78 | 3·10 | 2·60 | 1·87 | 0·65 | 1·00 | 1·43 | 1·27 | [1·65] | 1·37 | 0·98 |
| 7 | [1·72] | 2·39 | 4·10 | [1·60] | 0·80 | 1·02 | [1·40] | 1·77 | 1·41 | 1·59 | 1·28 | 0·72 |
| 8 | 1·52 | 2·27 | 3·65 | 0·95 | 2·29 | 0·94 | 1·77 | 1·10 | [1·35] | 1·87 | 1·35 | [0·99] |
| 9 | 1·32 | 1·16 | 2·45 | 1·35 | 1·99 | [0·87] | 1·89 | 2·40 | 1·19 | 1·47 | 1·67 | 0·78 |
| 10 | 1·38 | 1·24 | [2·27] | 1·37 | 1·02 | 0·83 | 1·71 | 1·43 | 1·67 | 1·71 | [1·80] | 1·11 |
| 11 | 1·29 | [1·26] | 1·10 | 1·21 | 1·36 | 0·94 | 0·67 | [1·28] | 1·53 | 1·47 | 2·60 | 0·92 |
| 12 | 1·17 | 1·00 | 1·17 | 1·02 | [1·41] | 0·86 | 1·52 | 0·85 | 1·12 | 1·44 | 2·72 | 0·60 |
| 13 | 0·65 | 0·87 | 1·53 | 0·92 | 1·01 | 1·22 | 1·03 | 1·20 | 1·23 | [1·56] | 1·15 | 0·67 |
| 14 | [0·88] | 1·00 | 1·14 | [2·04] | 1·70 | 0·92 | [1·20] | 0·69 | 2·16 | 1·82 | 1·66 | 1·17 |
| 15 | 0·59 | 1·24 | 1·17 | 1·17 | 1·38 | 0·67 | 1·12 | 1·12 | [1·58] | 1·22 | 1·56 | [1·02] |
| 16 | 0·54 | 0·59 | 1·12 | 1·07 | 1·04 | [1·35] | 1·15 | 1·32 | 1·58 | 1·68 | 8·02 | 1·55 |
| 17 | 1·02 | 1·38 | [1·46] | 6·87 | 1·16 | 2·35 | 1·67 | 1·43 | 1·96 | 1·84 | [2·80] | 1·07 |
| 18 | 1·31 | [0·95] | 2·25 | 1·32 | 1·07 | 1·78 | 2·16 | [1·10] | 1·47 | 2·20 | 2·31 | 1·04 |
| 19 | 0·77 | 0·97 | 1·95 | 1·20 | [1·52] | 1·17 | 1·02 | 0·73 | 1·41 | 1·22 | 1·96 | 1·95 |
| 20 | 1·09 | 0·71 | 1·12 | 0·74 | 1·10 | 0·74 | 0·56 | 0·87 | 3·77 | [2·36] | 1·31 | 3·44 |
| 21 | [1·06] | 0·85 | 0·93 | [1·26] | 1·98 | 2·97 | [1·15] | 1·09 | 1·52 | 5·54 | 1·42 | 2·72 |
| 22 | 1·15 | 0·98 | 1·23 | 1·32 | 2·80 | 1·25 | 1·85 | 2·48 | [2·08] | 1·76 | 5·58 | [1·75] |
| 23 | 1·44 | 0·80 | 1·23 | 1·71 | 3·45 | [1·31] | 0·52 | 3·22 | 1·35 | 1·62 | 4·51 | 0·80 |
| 24 | 0·61 | 0·86 | [1·32] | 1·27 | 1·45 | 1·10 | 0·81 | 2·75 | 1·44 | 1·59 | [2·64] | 0·97 |
| 25 | 3·84 | [1·20] | 1·43 | 3·42 | 1·51 | 0·51 | 2·95 | [2·15] | 3·02 | 4·82 | 1·25 | 0·64 |
| 26 | 0·78 | 0·90 | 1·40 | 2·48 | [1·84] | 1·30 | 1·76 | 1·47 | 4·63 | 4·60 | 1·77 | 0·87 |
| 27 | 1·95 | 1·11 | 1·69 | 2·47 | 1·47 | 0·57 | 2·43 | 1·40 | 3·68 | [2·61] | 1·30 | 1·13 |
| 28 | [1·78] | 2·52 | 1·85 | [2·37] | 1·86 | 0·43 | [2·04] | 1·54 | 2·29 | 1·60 | 3·34 | 1·71 |
| 29 | 1·02 | 2·14 | 3·25 | 1·18 | 1·30 | 1·75 | 1·24 | 1·30 | [4·06] | 1·48 | 2·13 | [1·87] |
| 30 | 1·51 | | 7·94 | 2·15 | 1·57 | [1·10] | 1·59 | 2·87 | 3·60 | 1·58 | 1·77 | 3·68 |
| 31 | 1·59 | | [3·43] | | 0·92 | | 2·25 | 2·28 | | 1·82 | | 1·97 |

*Annual Variation of the Differences for the Magnetic Declination.*—The following are the mean differences for each month :—

| Jan. | Feb. | March. | April. | May. | June. | July. | Aug. | Sept. | Oct. | Nov. | Dec. |
|---|---|---|---|---|---|---|---|---|---|---|---|
| 1′·34 | 1′·40 | 2′·22 | 1′·87 | 1′·60 | 1′·12 | 1′·43 | 1′·71 | 1′·93 | 2′·26 | 2′·30 | 1′·40 |

There are here two maxima and two minima; the principal minimum occurs in June, and the principal maximum in October and November; the mean for the three months, May, June, and July, is 1′·38, which is also the mean for the three months, December, January and February. The law of the variations may be stated as follows :—The mean difference of hourly observations from their corresponding monthly means is a minimum near the solstices, and a maximum near the equinoxes. This result is in accordance with that already obtained in the discussion for the diurnal range.

TABLE XV.—Mean difference of a Single Observation from the Monthly Mean at the corresponding hour, on each day of the Moon's Age, Position in Altitude, and Distance from the Earth.

| Moon's Age. | Mean Difference. | Moon's Age. | Mean Difference. | After Moon farthest North. | Mean Difference. | After Moon farthest North. | Mean Difference. | Before and after Perigee. | Mean Difference. | Before and after Apogee. | Mean Difference. |
|---|---|---|---|---|---|---|---|---|---|---|---|
| Day. | ′ | Day. | ′ | Day. | ′ | Day. | ′ | Day. | ′ | Day. | ′ |
| 15 | 2·09 | 0 | 1·69 | 0 | 1·45 | 14 | 1·45 | 7 | 1·88 | 7 | 1·69 |
| 16 | 2·21 | 1 | 1·45 | 1 | 1·45 | 15 | 1·73 | 6 | 1·56 | 6 | 1·51 |
| 17 | 2·09 | 2 | 1·48 | 2 | 1·97 | 16 | 1·39 | 5 | 2·25 | 5 | 1·78 |
| 18 | 2·12 | 3 | 1·22 | 3 | 1·72 | 17 | 1·77 | 4 | 1·77 | 4 | 1·89 |
| 19 | 2·35 | 4 | 1·24 | 4 | 1·99 | 18 | 1·45 | 3 | 1·50 | 3 | 2·05 |
| 20 | 1·58 | 5 | 1·45 | 5 | 2·20 | 19 | 1·68 | 2 | 1·60 | 2 | 2·66 |
| 21 | 1·64 | 6 | 2·23 | 6 | 2·07 | 20 | 1·72 | 1 | 1·79 | 1 | 1·58 |
| 22 | 1·42 | 7 | 1·53 | 7 | 1·62 | 21 | 1·66 | P | 1·52 | A | 1·82 |
| 23 | 1·31 | 8 | 1·80 | 8 | 1·69 | 22 | 1·69 | 1 | 1·88 | 1 | 1·27 |
| 24 | 1·44 | 9 | 1·70 | 9 | 1·85 | 23 | 2·50 | 2 | 1·55 | 2 | 1·33 |
| 25 | 1·28 | 10 | 2·27 | 10 | 1·52 | 24 | 2·28 | 3 | 1·52 | 3 | 1·50 |
| 26 | 1·16 | 11 | 1·97 | 11 | 1·30 | 25 | 1·80 | 4 | 1·50 | 4 | 1·66 |
| 27 | 1·27 | 12 | 2·42 | 12 | 1·50 | 26 | 1·73 | 5 | 1·83 | 5 | 1·68 |
| 28 | 1·18 | 13 | 2·35 | 13 | 1·42 | 27 | 1·47 | 6 | 1·61 | 6 | 1·94 |
| 29 | 1·26 | 14 | 2·23 | | | | | 7 | 1·69 | 7 | 1·95 |

*Variation of the Mean Differences with respect to the Moon's Age.*—The first portion of the previous table contains the hourly means of the differences for each day of the moon's age. The result in this case, also, is the same as that obtained in the discussion of the diurnal ranges, namely, a maximum about the opposition, and a minimum near the conjunction; there is the appearance of a secondary maximum at the conjunction, a minimum occurring a few days before it and a few days after it. The following are means of groups :—

| | | | |
|---|---|---|---|
| 14 days to 16 days, Full Moon, | 2′·18 | 29 days to 1 day, New Moon, | 1′·47 |
| 17 ... 20 ... | 2′·04 | 2 ... 5 ... | 1′·35 |
| 21 ... 24 ... | 1′·45 | 6 ... 9 ... | 1′·82 |
| 25 ... 28 ... | 1′·22 | 10 ... 13 ... | 2′·25 |

So that the average difference of an observation from the monthly mean for the corresponding hour is about twice as great at opposition as at conjunction.

*Variation of the Mean Differences with respect to the Moon's Declination.*—From the two preceding results (for the annual variation and moon's age) it follows that maxima of the differences should occur when the moon is near the equator, and minima when it is farthest north and farthest south; that this is the fact, may be seen from the second portion of Table XV., and also from the following means of groups :—

| | | | |
|---|---|---|---|
| 27 days to 1 day, Moon farthest North, | 1′·46 | 13 days to 15 days, Moon farthest South, | 1′·53 |
| 2 ... 5 ... | 1′·97 | 16 ... 19 ... | 1′·58 |
| 6 ... 8 ... | 1′·80 | 20 ... 22 ... | 1′·69 |
| 9 ... 12 ... | 1′·64 | 23 ... 26 ... | 2′·08 |

From these groups the principal minimum occurs when the moon is farthest north, and the two maxima occur when the moon is north of the equator.

*Diurnal Variation of the Mean Differences.*—Tables XVI. and XVII. contain the mean differences for each hour in each month, each quarter, and the year. From the means for each hour for the year, it appears that the average disturbance is a maximum about $8\frac{1}{2}^{h}$ P.M.; the minimum occurs perhaps about noon, but the value of the average disturbance oscillates within small limits between 3 A.M. and 5 P.M. The two consecutive hours that have the highest mean value are 8 P.M. and 9 P.M., and the two that have the lowest mean value are noon and 1 P.M. Had observations been made at the *even* Göttingen hours only, the maximum would have been exhibited at 11 P.M. Makerstoun mean time.

TABLE XVI.—Mean difference of a Single Observation from the Monthly Mean at the corresponding hour, for each Hour in each Month.

| Mak. M. T. | Jan. | Feb. | March. | April. | May. | June. | July. | Aug. | Sept. | Oct. | Nov. | Dec. |
|---|---|---|---|---|---|---|---|---|---|---|---|---|
| h. | ′ | ′ | ′ | ′ | ′ | ′ | ′ | ′ | ′ | ′ | ′ | ′ |
| 12 | 1·10 | 1·36 | 3·01 | 3·13 | 2·43 | 1·16 | 1·31 | 2·34 | 1·67 | 1·96 | 2·41 | 1·38 |
| 13 | 0·87 | 1·58 | 2·64 | 1·85 | 1·99 | 1·50 | 1·42 | 2·17 | 1·87 | 1·82 | 2·33 | 2·81 |
| 14 | 1·07 | 1·21 | 2·61 | 1·58 | 2·26 | 1·38 | 1·38 | 2·62 | 1·70 | 1·92 | 1·81 | 1·20 |
| 15 | 1·48 | 0·89 | 1·60 | 2·15 | 1·51 | 1·43 | 1·58 | 2·04 | 1·87 | 1·89 | 1·57 | 0·94 |
| 16 | 1·10 | 1·54 | 2·30 | 1·91 | 2·33 | 1·58 | 0·97 | 1·16 | 2·11 | 2·40 | 1·19 | 1·04 |
| 17 | 0·98 | 1·01 | 1·41 | 1·57 | 1·64 | 1·34 | 1·62 | 1·68 | 2·45 | 3·03 | 1·75 | 1·13 |
| 18 | 1·49 | 0·78 | 1·54 | 1·49 | 1·31 | 0·90 | 1·91 | 1·49 | 2·42 | 2·99 | 1·37 | 0·99 |
| 19 | 1·31 | 0·79 | 1·37 | 1·88 | 1·25 | 0·91 | 2·05 | 1·12 | 2·35 | 2·65 | 1·23 | 0·67 |
| 20 | 1·13 | 0·90 | 1·89 | 1·81 | 1·44 | 0·89 | 1·87 | 1·53 | 1·42 | 2·23 | 1·69 | 0·70 |
| 21 | 1·19 | 0·90 | 1·73 | 2·23 | 1·62 | 1·33 | 1·54 | 1·56 | 1·62 | 2·55 | 1·76 | 1·08 |
| 22 | 1·38 | 1·09 | 1·78 | 2·00 | 1·54 | 1·07 | 1·25 | 1·35 | 1·39 | 2·37 | 1·86 | 0·89 |
| 23 | 1·03 | 1·11 | 1·33 | 1·40 | 1·54 | 1·62 | 1·54 | 1·38 | 1·52 | 1·60 | 2·20 | 0·96 |
| 0 | 1·44 | 1·37 | 1·20 | 2·34 | 0·87 | 1·13 | 1·96 | 1·53 | 0·94 | 1·81 | 2·31 | 1·33 |
| 1 | 1·44 | 1·03 | 1·33 | 1·27 | 1·20 | 1·26 | 1·80 | 1·47 | 1·42 | 1·50 | 1·87 | 1·29 |
| 2 | 1·63 | 1·26 | 1·85 | 1·74 | 1·18 | 1·06 | 1·35 | 1·86 | 1·93 | 1·43 | 1·82 | 1·15 |
| 3 | 1·41 | 1·38 | 1·45 | 1·56 | 1·40 | 0·91 | 1·48 | 2·01 | 1·67 | 1·76 | 1·85 | 2·71 |
| 4 | 1·14 | 1·43 | 1·28 | 1·73 | 1·28 | 0·91 | 1·34 | 1·54 | 1·40 | 1·38 | 2·25 | 1·73 |
| 5 | 0·93 | 1·54 | 3·54 | 1·69 | 1·17 | 0·71 | 0·93 | 1·51 | 1·86 | 1·52 | 1·40 | 1·09 |
| 6 | 1·54 | 1·25 | 3·87 | 1·64 | 1·04 | 0·70 | 1·24 | 1·48 | 2·93 | 2·17 | 6·49 | 1·16 |
| 7 | 1·47 | 1·69 | 3·32 | 1·84 | 1·53 | 0·97 | 1·57 | 1·27 | 3·30 | 1·63 | 3·39 | 1·19 |
| 8 | 2·36 | 2·34 | 3·01 | 1·54 | 2·26 | 0·92 | 0·97 | 1·32 | 2·87 | 5·68 | 4·27 | 2·55 |
| 9 | 1·85 | 3·07 | 2·83 | 1·52 | 1·54 | 0·86 | 0·82 | 2·47 | 1·62 | 2·60 | 2·65 | 1·94 |
| 10 | 1·55 | 2·11 | 3·19 | 1·90 | 1·65 | 1·25 | 1·13 | 1·97 | 2·12 | 2·61 | 2·59 | 1·96 |
| 11 | 1·38 | 1·89 | 3·13 | 3·17 | 2·35 | 1·07 | 1·28 | 2·25 | 1·80 | 2·80 | 3·11 | 1·66 |

TABLE XVII.—Mean difference of a Single Observation from the Monthly Mean at the corresponding hour, for each Hour in each of the Astronomical Quarters, and in the year 1844.

| Mak. M. T. | Nov. Dec. Jan. | Feb. March. April. | May. June. July. | Aug. Sept. Oct. | Year. | Mak. M. T. | Nov. Dec. Jan. | Feb. March. April. | May. June. July. | Aug. Sept. Oct. | Year. |
|---|---|---|---|---|---|---|---|---|---|---|---|
| h. | ′ | ′ | ′ | ′ | ′ | h. | ′ | ′ | ′ | ′ | ′ |
| 12 | 1·62 | 2·52 | 1·65 | 2·00 | 1·94 | 0 | 1·69 | 1·64 | 1·33 | 1·44 | 1·52 |
| 13 | 1·99 | 2·03 | 1·64 | 1·95 | 1·90 | 1 | 1·53 | 1·21 | 1·42 | 1·46 | 1·41 |
| 14 | 1·36 | 1·81 | 1·68 | 2·09 | 1·73 | 2 | 1·53 | 1·62 | 1·20 | 1·73 | 1·52 |
| 15 | 1·33 | 1·55 | 1·51 | 1·93 | 1·58 | 3 | 1·98 | 1·46 | 1·27 | 1·82 | 1·63 |
| 16 | 1·11 | 1·92 | 1·62 | 1·88 | 1·63 | 4 | 1·70 | 1·48 | 1·19 | 1·44 | 1·45 |
| 17 | 1·28 | 1·33 | 1·54 | 2·38 | 1·64 | 5 | 1·14 | 2·27 | 0·94 | 1·63 | 1·49 |
| 18 | 1·29 | 1·28 | 1·39 | 2·29 | 1·56 | 6 | 3·04 | 2·26 | 1·00 | 2·18 | 2·12 |
| 19 | 1·07 | 1·35 | 1·42 | 2·03 | 1·47 | 7 | 2·01 | 2·29 | 1·36 | 2·03 | 1·92 |
| 20 | 1·17 | 1·54 | 1·41 | 1·73 | 1·46 | 8 | 3·05 | 2·30 | 1·40 | 3·30 | 2·51 |
| 21 | 1·34 | 1·63 | 1·50 | 1·92 | 1·60 | 9 | 2·14 | 2·46 | 1·08 | 2·24 | 1·98 |
| 22 | 1·38 | 1·63 | 1·29 | 1·71 | 1·50 | 10 | 2·02 | 2·41 | 1·35 | 2·24 | 2·00 |
| 23 | 1·39 | 1·29 | 1·56 | 1·50 | 1·43 | 11 | 2·04 | 2·74 | 1·58 | 2·29 | 2·16 |

When the differences are combined for periods of three months, we find the following approximate epochs of maximum and minimum :—

| | | | |
|---|---|---|---|
| Nov., Dec., Jan.; | minimum, $7^h$ A.M., Makerstoun mean time; | maximum, $8^h$ P.M. | |
| Feb., Mar., April; | ..... between $5^h$ A.M. and $4^h$ P.M.; | ..... $11^h$ P.M. | Value nearly constant between $5^h$ P.M. and $1^h$ A.M. |
| May, June, July; | ..... between $5^h$ P.M. and $6^h$ P.M; | ..... $2^h$ A.M. | |
| Aug., Sept., Oct.; | ..... $1^h$ P.M.; | ..... $8^h$ P.M. | |

These indicate that the diurnal law of variation of disturbances varied in 1844, with season; this may be due, however, to the intermittent character of the phenomenon, and the differences may disappear in a greater number of observations.

*Annual Variation of the* number *of Positive Differences.*—The following are the numbers of differences in 100 which are positive in each month of 1844 :—

| Jan. | Feb. | March. | April. | May. | June. | July. | Aug. | Sept. | Oct. | Nov. | Dec. |
|---|---|---|---|---|---|---|---|---|---|---|---|
| 52·7 | 51·8 | 51·4 | 48·4 | 49·7 | 52·8 | 50·0 | 49·9 | 53·0 | 46·0 | 48·9 | 55·3 |

In order to obtain more certain mean values for each epoch, the mean for each three months is given below as the mean for the middle month :—

| Jan. | Feb. | March. | April. | May. | June. | July. | Aug. | Sept. | Oct. | Nov. | Dec. |
|---|---|---|---|---|---|---|---|---|---|---|---|
| 53·3 | 52·0 | 50·5 | 49·8 | 50·3 | 50·8 | 50·9 | 51·0 | 49·6 | 49·3 | 50·1 | 52·3 |

From which it appears, that the number of excursions of the north end of the declination magnet, to the west of the monthly mean position in 1844, was a maximum in January and about July, and a minimum in April and October; or a maximum after the solstices, and a minimum after the equinoxes. The reverse, of course, holds for the number of negative deviations.

*Diurnal Variation of the* number *of Positive Differences.*—The numbers of positive differences in 100 for each hour of Makerstoun mean time for 1844, are as follow :—

| $12^h$ | $1^h$ A.M. | $2^h$ | $3^h$ | $4^h$ | $5^h$ | $6^h$ | $7^h$ | $8^h$ | $9^h$ | $10^h$ | $11^h$ | $12^h$ | $1^h$ P.M. | $2^h$ | $3^h$ | $4^h$ | $5^h$ | $6^h$ | $7^h$ | $8^h$ | $9^h$ | $10^h$ | $11^h$ |
|---|---|---|---|---|---|---|---|---|---|---|---|---|---|---|---|---|---|---|---|---|---|---|---|
| 58·6 | 58·3 | 55·7 | 53·2 | 50·0 | 44·0 | 36·0 | 39·2 | 41·3 | 38·9 | 37·9 | 41·7 | 37·6 | 42·7 | 43·0 | 46·2 | 47·8 | 48·7 | 59·2 | 67·5 | 70·7 | 66·6 | 67·8 | 66·2 |

Whence the number of excursions to the west of the monthly mean position for each hour is a minimum about $9^h$ or $10^h$ A.M., and a maximum about $8^h$ P.M. The reverse is the case for the number of excursions to the east of the mean position, and the numbers of positive and negative differences are equal about $4^h$ A.M. and $5^h$ P.M. This result is evidently related to that already obtained for the mean effect of disturbance.

The previous conclusions have reference to the differences of the observations from their arithmetical mean, which, it has been shewn, is in all probability not the normal mean; we are therefore still ignorant of the actual sums of the positive and of the negative excursions at different epochs. These differences might be determined approximately from the mean effects of disturbance, and the total sums of differences already found; the error would be due solely to the observations occurring between the arithmetical mean and the normal mean. The positive and negative sums of difference have, however, been determined, by employing the normal mean (as deduced from the five days of least disturbance in each month) instead of the arithmetical mean; the differences thus obtained may be considered as due to disturbances of all classes, but chiefly to intermittent disturbances. For this reason, the following results are distinguished from the former results, in terming them means of disturbances, instead of means of differences.

*Annual Variation of the Mean Disturbance.*—The following are the average disturbances for a single observation of magnetic declination, in each month of 1844 :—

| Jan. | Feb. | March. | April. | May. | June. | July. | Aug. | Sept. | Oct. | Nov. | Dec. |
|---|---|---|---|---|---|---|---|---|---|---|---|
| 1′·31 | 1′·42 | 2′·15 | 1′·90 | 1′·63 | 1′·18 | 1′·51 | 1′·77 | 1′·88 | 2′·15 | 2′·15 | 1′·34 |

This gives the same law as that already found from the sums of differences; the values are but slightly different, being on the whole less for the disturbances or differences from the normal mean.

The mean disturbance of a single observation in 1844, . . . . . = 1′·70

*Diurnal Variation of the Positive and Negative sums of Disturbances.*—The following are the sums for each hour in 1844:—

| | 12h | 1h A.M. | 2h | 3h | 4h | 5h | 6h | 7h | 8h | 9h | 10h | 11h | 0h | 1h P.M. | 2h | 3h | 4h | 5h | 6h | 7h | 8h | 9h | 10h | 11h |
|---|---|---|---|---|---|---|---|---|---|---|---|---|---|---|---|---|---|---|---|---|---|---|---|---|
| + | 156′ | 178′ | 225′ | 240′ | 244′ | 294′ | 345′ | 355′ | 391′ | 455′ | 413′ | 375′ | 408′ | 361′ | 363′ | 329′ | 280′ | 222′ | 182′ | 151′ | 107′ | 110′ | 117′ | 105′ |
| − | 446 | 413 | 322 | 264 | 266 | 201 | 127 | 118 | 92 | 87 | 87 | 103 | 97 | 102 | 126 | 183 | 184 | 233 | 415 | 416 | 595 | 487 | 484 | 549 |

These values, when projected, produce two curves of remarkable regularity. The sum of the positive disturbance is a minimum about 10h P.M.; it increases regularly from thence till about 9h 10m A.M.; the interpolated maximum occurs about 10h A.M.; it then diminishes, after noon, with the previous regularity, till about 8h P.M. The sum of the negative disturbance, on the contrary, is a maximum about 10h P.M., and it becomes a minimum about 10h A.M.; the range of the positive sums is about a tenth less than the range of the negative sums. Each of the two curves is irregular once in the 24 hours, and, curiously enough, this does not occur at the same time; the negative disturbance curve is irregular from 8h P.M. till 11h P.M., while the positive disturbance curve has nearly constant ordinates. On the contrary, the positive disturbance curve is irregular from about 9h A.M. till 1h P.M., while the regularity of the negative curve is most marked. The characteristics of these curves are therefore identical, when we consider the ordinates at 12 hours' interval. It is obvious, then, that we have in the positive disturbance curve a simultaneous representative of the negative disturbance curve for our periæci, the sign of motion with reference to space, or the sun, being the same for both.

The result obtained for the year is also shewn, with considerable regularity, in the sums for each month. In the discussion of the total sums of differences, it appeared that the epochs of maximum and minimum varied with season. A consideration of the positive and negative portions, renders it probable that this variation is accidental; thus, though the minimum of the total sums of differences occurred, for the summer quarter, at 5h or 6h P.M., the positive disturbance has its maximum, for the same quarter, about 10h A.M., and its minimum about 10h P.M., the reverse being true of the negative disturbance, which is exactly the law of the sums from the whole observations of the year.

*Annual Variation of the* number *of Positive Disturbances.*—The following are the numbers per cent. of hourly observations in each month, which were positive, or to the west of the normal mean:—

| Jan. | Feb. | March. | April. | May. | June. | July. | Aug. | Sept. | Oct. | Nov. | Dec. |
|---|---|---|---|---|---|---|---|---|---|---|---|
| 51·5 | 55·3 | 59·8 | 49·5 | 51·1 | 52·2 | 45·5 | 50·8 | 54·7 | 47·2 | 58·0 | 60·4 |

Taking the mean for each three months as the mean for the middle month—

| | | | | | | | | | | | |
|---|---|---|---|---|---|---|---|---|---|---|---|
| 55·7 | 55·5 | 54·9 | 53·5 | 50·9 | 49·6 | 49·5 | 50·3 | 50·9 | 53·3 | 55·2 | 56·6 |

From which it would appear, that the number of excursions to the west of the normal mean is a maximum at the winter solstice, and a minimum at the summer solstice. The reverse holds for the excursions to the east of the normal mean. In the year 1844, there were in 100 hourly observations of magnetic declination, 53 to the west and 47 to the east of the normal means.

*Diurnal Variation of the* number *of Positive Disturbances.*—The numbers *per cent.* for each hour, in 1844, which are to the west of their normal means, are—

| 12h | 1h A.M. | 2h | 3h | 4h | 5h | 6h | 7h | 8h | 9h | 10h | 11h | 0h | 1h P.M. | 2h | 3h | 4h | 5h | 6h | 7h | 8h | 9h | 10h | 11h |
|---|---|---|---|---|---|---|---|---|---|---|---|---|---|---|---|---|---|---|---|---|---|---|---|
| 38·5 | 39·2 | 47·5 | 50·0 | 44·3 | 50·6 | 57·0 | 58·9 | 64·3 | 69·1 | 66·6 | 64·6 | 69·7 | 65·3 | 62·1 | 59·6 | 58·3 | 51·9 | 48·4 | 47·1 | 38·2 | 41·7 | 38·2 | 39·2 |

The number is a maximum at about 11h A.M., and a minimum about 10½h P.M. There are twice as many excursions to the west of the normal mean at 10h A.M., as there are to the east, and there are about three excursions to the east for two to the west at 10h P.M.

*Diurnal Variation of the Positive and Negative Means of Disturbance.*—Since the number of positive disturbances is greatest when the sums of their excursions are greatest, and least when the sums are least, it is still unknown whether the increase of the sums is solely due to the increase of the number of disturbances, or whether the average positive or negative excursion increases with the number. The following are the average positive and negative excursions for each hour, together with the average of all the disturbances, without respect to sign:—

| | 12h | 1h A.M. | 2h | 3h | 4h | 5h | 6h | 7h | 8h | 9h | 10h | 11h | 0h | 1h P.M. | 2h | 3h | 4h | 5h | 6h | 7h | 8h | 9h | 10h | 11h |
|---|---|---|---|---|---|---|---|---|---|---|---|---|---|---|---|---|---|---|---|---|---|---|---|---|
| | ′ | ′ | ′ | ′ | ′ | ′ | ′ | ′ | ′ | ′ | ′ | ′ | ′ | ′ | ′ | ′ | ′ | ′ | ′ | ′ | ′ | ′ | ′ | ′ |
| + | 1·29 | 1·45 | 1·51 | 1·53 | 1·75 | 1·85 | 1·93 | 1·92 | 1·93 | 2·10 | 1·97 | 1.85 | 1·86 | 1·76 | 1·86 | 1·76 | 1·53 | 1·36 | 1·20 | 1·02 | 0·89 | 0·84 | 0·98 | 0·85 |
| − | 2·31 | 2·16 | 1·95 | 1·68 | 1·52 | 1·30 | 0·94 | 0·91 | 0·82 | 0·90 | 0·82 | 0·92 | 1·02 | 0·94 | 1·06 | 1·44 | 1·41 | 1·54 | 2·56 | 2·50 | 3·07 | 2·66 | 2·50 | 2·87 |
| All, | 1·91 | 1·88 | 1·74 | 1·60 | 1·62 | 1·58 | 1·50 | 1·50 | 1·54 | 1·73 | 1·59 | 1·52 | 1·60 | 1·48 | 1·56 | 1·63 | 1·48 | 1·45 | 1·90 | 1·81 | 2·23 | 1·90 | 1·92 | 2·08 |

The average value of the excursions, therefore, varies considerably: the positive excursions from the normal mean have their greatest average value about $9^h$ A.M., and their least average value about $10^h$ P.M., the least value being less than half the largest. The average negative excursion is least about $10^h$ A.M., and greatest about 9 P.M (using the interpolated epoch), the least average being less than a third of the greatest. The least positive and negative averages have the same value, but the greatest negative average is fully a third greater than the greatest positive average. The average value of *all* the excursions from the normal mean is a maximum (using interpolated epochs) between $9^h$ and $10^h$ P.M.; the time of minimum is not well marked; minima occur about $7^h$ A.M. and $5^h$ P.M., and there is the appearance of a secondary maximum about $9^h$ A.M. The greatest average is to the least in the ratio of about 3 to 2.

*Probable Disturbance of Magnetic Declination.*—In order to determine the probable disturbance for each hour of the day, Dr LLOYD has proposed to use the differences from the arithmetical means as errors in the observations of a constant quantity, and to consider the square root of the mean of the squares of these differences, as the *mean disturbance*, corresponding to the mean error in the calculus of probabilities. It is obvious that the ordinary methods of the calculus of probabilities could not be employed if the probable error were considered with reference to the *normal* mean, which is not the *arithmetical* mean; considering the probable error, however, with reference to the arithmetical mean, it is certain from the foregoing conclusions that the distribution of the individual differences or errors is not such as will satisfy the hypothesis of the observations of a constant quantity. The differences are not distributed equally, positively and negatively; nor is the difference from such a distribution constant: a new hypothesis for the mode of distribution would be requisite for each hour. Independently of this consideration, it will be found from the following results that the number of errors occurring within certain limits is not satisfied by the usual function of the errors obtained from the calculus of probabilities.

The following Tables may be considered a contribution to the theory of the distribution of disturbances of the magnetic declination, with respect to the arithmetical means of all the observations.

TABLE XVIII.—Number of Positive and Negative Differences which occur between the limits of successive Minutes for each Month, and for the year 1844.

| Month. | | 0′ to 1′. | 1′ to 2′. | 2′ to 3′. | 3′ to 4′. | 4′ to 5′. | 5′ to 6′. | 6′ to 7′. | 7′ to 8′. | 8′ to 9′. | 9′ to 10′. | 10′ to 15′. | 15′ to 20′. | 20′ to 25′. | 25′ to 30′. | 30′ to 40′. |
|---|---|---|---|---|---|---|---|---|---|---|---|---|---|---|---|---|
| Jan. | + | 184 | 103 | 22 | 13 | 5 | 6 | 5 | 1 | 2 | ... | ... | ... | ... | ... | ... |
| | − | 154 | 85 | 38 | 11 | 9 | 4 | 3 | ... | 1 | 1 | ... | 1 | ... | ... | ... |
| Feb. | + | 157 | 92 | 38 | 13 | 5 | 1 | 2 | 1 | 1 | ... | 2 | ... | ... | ... | .. |
| | − | 158 | 76 | 22 | 12 | 4 | 3 | 4 | 2 | ... | 2 | 3 | 1 | ... | ... | ... |
| March | + | 102 | 105 | 55 | 22 | 9 | 8 | 6 | 4 | 1 | 3 | 5 | 1 | ... | ... | ... |
| | − | 142 | 73 | 29 | 17 | 6 | 6 | 8 | 2 | 3 | 1 | 10 | 2 | 2 | 1 | ... |
| April | + | 135 | 80 | 38 | 14 | 12 | 6 | 4 | 1 | 2 | 1 | 7 | 2 | ... | ... | ... |
| | − | 135 | 85 | 49 | 22 | 9 | 4 | 5 | 3 | 3 | ... | 3 | ... | ... | 1 | ... |
| May | + | 136 | 85 | 65 | 22 | 4 | 5 | ... | 1 | ... | 1 | 3 | ... | ... | ... | ... |
| | − | 156 | 82 | 48 | 20 | 4 | 4 | 4 | 2 | ... | ... | 4 | 1 | ... | ... | ... |
| June | + | 199 | 81 | 19 | 7 | 6 | 3 | ... | ... | 1 | 1 | ... | ... | ... | ... | ... |
| | − | 161 | 63 | 38 | 11 | 6 | 2 | 1 | ... | ... | 1 | ... | ... | ... | ... | ... |
| July | + | 167 | 88 | 29 | 17 | 12 | 7 | 3 | ... | ... | 1 | ... | ... | ... | ... | ... |
| | − | 148 | 90 | 54 | 14 | 9 | 2 | 4 | 1 | ... | ... | ... | ... | ... | ... | ... |
| Aug. | + | 132 | 105 | 34 | 21 | 13 | 10 | 2 | 1 | 2 | 1 | 1 | ... | ... | ... | ... |
| | − | 147 | 71 | 54 | 28 | 11 | 5 | 2 | 6 | ... | 1 | ... | ... | ... | ... | ... |
| Sept. | + | 117 | 95 | 60 | 21 | 9 | 7 | 2 | 3 | 1 | ... | 2 | 1 | ... | ... | ... |
| | − | 111 | 83 | 40 | 13 | 10 | 5 | 6 | 2 | 2 | 1 | 5 | 2 | ... | ... | ... |
| Oct. | + | 108 | 63 | 50 | 35 | 14 | 1 | 9 | 2 | 5 | 4 | 3 | 2 | 1 | 1 | ... |
| | − | 116 | 103 | 74 | 22 | 12 | 4 | 6 | 4 | 1 | ... | 4 | 2 | ... | 1 | ... |
| Nov. | + | 87 | 71 | 66 | 40 | 18 | 7 | 4 | 6 | ... | 1 | 4 | 1 | ... | ... | ... |
| | − | 124 | 108 | 34 | 18 | 5 | 8 | 3 | 3 | 4 | 1 | 4 | 1 | 1 | 2 | 2 |
| Dec. | + | 178 | 110 | 32 | 10 | 5 | 5 | 1 | 3 | 1 | ... | ... | ... | ... | ... | ... |
| | − | 162 | 70 | 14 | 10 | 4 | 4 | 3 | ... | 2 | 4 | 1 | ... | 2 | 1 | ... |
| Year | + | 1702 | 1078 | 508 | 235 | 112 | 66 | 38 | 23 | 16 | 13 | 27 | 7 | 1 | 1 | ... |
| | − | 1714 | 989 | 494 | 198 | 89 | 51 | 49 | 25 | 16 | 12 | 34 | 10 | 5 | 6 | 2 |

TABLE XIX.—Number of differences in 1000 (without reference to sign), which occur between the limits of successive minutes, for each Month, and for the Year 1844.

| Month. | 0′ to 1′. | 1′ to 2′. | 2′ to 3′. | 3′ to 4′. | 4′ to 5′. | 5′ to 6.′ | 6′ to 7′. | 7′ to 8′. | 8′ to 9.′ | 9′ to 10′. | 10′ to 15′. | 15′ to 20′. | 20′ to 25′. | 25′ to 30′. | 30′ to 40.′ |
|---|---|---|---|---|---|---|---|---|---|---|---|---|---|---|---|
| January | 528 | 290 | 93 | 37 | 22 | 15 | 12 | 2 | 5 | 2 | ... | 2 | ... | ... | ... |
| February | 525 | 280 | 100 | 42 | 15 | 7 | 10 | 5 | 2 | 3 | 8 | 2 | ... | ... | ... |
| March | 391 | 285 | 135 | 62 | 24 | 22 | 22 | 10 | 6 | 6 | 24 | 5 | 3 | 2 | ... |
| April | 433 | 264 | 140 | 58 | 34 | 16 | 14 | 6 | 8 | 2 | 16 | 3 | ... | 2 | ... |
| May | 451 | 258 | 174 | 65 | 12 | 14 | 6 | 5 | ... | 2 | 11 | 2 | ... | ... | ... |
| June | 600 | 240 | 95 | 30 | 20 | 8 | 2 | ... | 2 | 3 | ... | ... | ... | ... | ... |
| July | 486 | 275 | 128 | 48 | 32 | 14 | 11 | 2 | ... | 2 | ... | ... | ... | ... | ... |
| August | 431 | 272 | 136 | 76 | 37 | 23 | 6 | 11 | 3 | 3 | 2 | ... | ... | ... | ... |
| September | 380 | 297 | 167 | 57 | 32 | 20 | 13 | 8 | 5 | 2 | 12 | 5 | ... | ... | ... |
| October | 346 | 256 | 191 | 88 | 40 | 8 | 23 | 9 | 9 | 6 | 11 | 6 | 2 | 3 | ... |
| November | 338 | 287 | 160 | 93 | 37 | 24 | 11 | 14 | 6 | 3 | 13 | 3 | 2 | 3 | 3 |
| December | 545 | 288 | 074 | 32 | 14 | 14 | 6 | 5 | 5 | 6 | 2 | ... | 3 | 2 | ... |
| Year | 453 | 274 | 133 | 57 | 27 | 16 | 12 | 6 | 4 | 3 | 8 | 2 | 1 | 1 | ... |

*Annual Variation of the Probable error of an Observation of Magnetic Declination.*—From Table XIX. I have determined by a graphic interpolation the probable error of a single observation from the monthly mean for the corresponding hour, that is to say, I have determined approximately the error for which there are as many greater as there are less than itself. These are :—

| Jan. | Feb. | March. | April. | May. | June. | July. | Aug. | Sept. | Oct. | Nov. | Dec. |
|---|---|---|---|---|---|---|---|---|---|---|---|
| 0′·93 | 0′·94 | 1′·35 | 1′·20 | 1′·16 | 0′·78 | 1′·04 | 1′·20 | 1′·36 | 1′·58 | 1′·51 | 0′·90 |

The probable error of a single observation from the monthly mean for the corresponding hour (without reference to which hour) is a minimum at the solstices, and a maximum at the equinoxes: the principal minimum occurs at the summer solstice, when the probable error is only 0′·78, or about half the value of the principal maximum which occurs in October. In order to shew the difference of these values from those to be deduced by the aid of the calculus of probabilities, we may obtain the latter with sufficient accuracy by means of the formula*

$$\text{Probable error} = 0{\cdot}845 \times \text{mean of errors},$$

which formula gives the following values :—

| Jan. | Feb. | March. | April. | May. | June. | July. | Aug. | Sept. | Oct. | Nov. | Dec. |
|---|---|---|---|---|---|---|---|---|---|---|---|
| 1′·13 | 1′·18 | 1′·88 | 1′·58 | 1′·35 | 0′·95 | 1′·21 | 1′·45 | 1′·63 | 1′·91 | 1′·95 | 1′·18 |

values which are from a fourth to a third more than the truth.

*Diurnal Variation of the Probable Error of an Observation of Magnetic Declination.*—The following are probable errors of a single observation for each hour (without reference to month) from the monthly means at the corresponding hours, deduced from Table XXI. by a graphic interpolation.

| | 1h A.M. | 2h | 3h | 4h | 5h | 6h | 7h | 8h | 9h | 10h | 11h | 0h | 1h P.M. | 2h | 3h | 4h | 5h | 6h | 7h | 8h | 9h | 10h | 11h | 12h |
|---|---|---|---|---|---|---|---|---|---|---|---|---|---|---|---|---|---|---|---|---|---|---|---|---|
| | 1′·12 | 0′·96 | 1′·10 | 0′·93 | 0′·95 | 0′·95 | 1′·04 | 1′·00 | 1′·17 | 1′·10 | 1′·17 | 1′·04 | 1′·01 | 1′·24 | 1′·24 | 0′·97 | 0′.79 | 1′·16 | 1′·24 | 1′·63 | 1′·41 | 1′·38 | 1′·55 | 1′·22 |
| Mean of two. | 1′·04 | | 1′·02 | | 0′·95 | | 1′·02 | | 1′·14 | | 1′·11 | | 1′·13 | | 1′·11 | | 0′·98 | | 1′·44 | | 1′·40 | | 1′·38 | |

From these values it appears that the probable error of a single observation from the monthly mean, for the corresponding hour (without reference to the month to which the observation belongs), is a minimum about 5h A.M., and about 5h P.M., being, in both cases, rather less than a minute; it is a principal maximum between 9h and 10h P.M., being nearly a minute and a-half (1′·5), and a secondary maximum about noon, being about 1′·13.

On the whole, it appears that, if it were required to make a single observation which should be as near to the monthly mean for the corresponding hour as possible, the observation should be made in June, and about 5h A.M. or 5h P.M. When a greater number of observations are obtained, more accurate values for each hour in *each* month may be found. Upon examining the distribution of the errors in the months of May, June, and July, 5h or 6h P.M. is found to be the hour of the smallest probable error in each month; the probable error at 5h

* ENCKE on "The Method of Least Squares." *Taylor's Scientific Memoirs*, vol. ii., p. 355.

or $6^h$ P.M. in June is only *half a minute* (0′·5); about this hour, also, the numbers of positive differences and negative differences are nearly equal; and since the mean of the observations at $6^h$ P.M. in June is within half a minute of the monthly mean of all the observations, the probable error of a single observation in June 1844 at $6^h$ P.M. would be only about 0′·5 from the mean declination for the month: a degree of accuracy which is quite equal to any thing that can be expected from a month's observations with the best portable apparatus.

TABLE XX.—Number of Positive and Negative Differences which occur between the limits of successive Minutes for each Hour in 1844.

| Makerstoun Mean Time. | | 0′ to 1′. | 1′ to 2′. | 2′ to 3′. | 3′ to 4′. | 4′ to 5′. | 5′ to 6′. | 6′ to 7′. | 7′ to 8′. | 8′ to 9′. | 9′ to 10′. | 10′ to 15′. | 15′ to 20′. | 20′ to 25′. | 25′ to 30′. | 30′ to 40′. |
|---|---|---|---|---|---|---|---|---|---|---|---|---|---|---|---|---|
| h. 12 | + | 76 | 59 | 30 | 9 | 2 | 4 | ... | ... | 2 | ... | 1 | 1 | ... | ... | ... |
| | − | 58 | 24 | 19 | 6 | 6 | ... | 6 | 4 | 1 | 1 | 2 | 1 | 1 | ... | ... |
| 13 | + | 78 | 69 | 16 | 4 | 4 | 5 | 1 | 1 | 2 | 2 | 1 | ... | ... | ... | ... |
| | − | 65 | 19 | 15 | 10 | 7 | 3 | 2 | 1 | 4 | 2 | 1 | 1 | ... | 1 | ... |
| 14 | + | 93 | 44 | 21 | 4 | 6 | 3 | 1 | 1 | ... | 1 | ... | 1 | ... | ... | ... |
| | − | 67 | 25 | 18 | 8 | 5 | 3 | 4 | 3 | 1 | ... | 2 | ... | ... | ... | ... |
| 15 | + | 80 | 46 | 18 | 11 | 4 | 4 | 3 | ... | 1 | ... | ... | ... | ... | ... | ... |
| | − | 66 | 36 | 19 | 13 | 8 | 1 | 2 | ... | 1 | ... | 1 | ... | ... | ... | ... |
| 16 | + | 90 | 30 | 16 | 8 | 2 | 2 | 1 | 1 | 1 | 3 | 3 | ... | ... | ... | ... |
| | − | 75 | 36 | 27 | 8 | 2 | 3 | 4 | ... | ... | ... | 2 | ... | ... | ... | ... |
| 17 | + | 80 | 30 | 9 | 3 | 4 | 3 | 2 | ... | ... | ... | 6 | ... | ... | 1 | ... |
| | − | 81 | 48 | 26 | 12 | 4 | 2 | 1 | 1 | ... | ... | ... | ... | ... | ... | ... |
| 18 | + | 64 | 16 | 10 | 4 | 2 | 8 | 2 | 1 | 2 | ... | 2 | 1 | 1 | ... | ... |
| | − | 99 | 62 | 29 | 10 | ... | 1 | ... | ... | ... | ... | ... | ... | ... | ... | ... |
| 19 | + | 61 | 28 | 13 | 5 | 7 | 3 | ... | 1 | 2 | ... | 1 | 2 | ... | ... | ... |
| | − | 91 | 68 | 27 | 2 | 2 | 1 | ... | ... | ... | ... | ... | ... | ... | ... | ... |
| 20 | + | 71 | 20 | 16 | 6 | 4 | 5 | 5 | ... | ... | 1 | 2 | ... | ... | ... | ... |
| | − | 85 | 56 | 31 | 10 | 1 | ... | ... | ... | ... | ... | ... | ... | ... | ... | ... |
| 21 | + | 52 | 30 | 18 | 6 | 6 | 1 | 1 | 2 | ... | 2 | 4 | ... | ... | ... | ... |
| | − | 84 | 64 | 29 | 13 | 1 | ... | ... | ... | ... | ... | ... | ... | ... | ... | ... |
| 22 | + | 50 | 29 | 17 | 9 | 4 | ... | 6 | 1 | 1 | ... | 2 | ... | ... | ... | ... |
| | − | 96 | 65 | 26 | 8 | ... | ... | ... | ... | ... | ... | ... | ... | ... | ... | ... |
| 23 | + | 56 | 32 | 20 | 13 | 3 | 2 | 3 | 1 | ... | ... | 1 | ... | ... | ... | ... |
| | − | 81 | 66 | 28 | 5 | 2 | ... | ... | ... | ... | ... | ... | ... | ... | ... | ... |
| 0 | + | 53 | 30 | 12 | 9 | 4 | 3 | 1 | 1 | 2 | 1 | ... | 2 | ... | ... | ... |
| | − | 98 | 53 | 35 | 8 | 1 | ... | ... | ... | ... | ... | ... | ... | ... | ... | ... |
| 1 | + | 59 | 36 | 13 | 17 | 4 | ... | 3 | ... | 1 | 1 | ... | ... | ... | ... | ... |
| | − | 96 | 46 | 27 | 8 | 2 | ... | ... | ... | ... | ... | ... | ... | ... | ... | ... |
| 2 | + | 52 | 39 | 21 | 13 | 3 | 2 | ... | 5 | ... | ... | ... | ... | ... | ... | ... |
| | − | 77 | 68 | 22 | 6 | 2 | 2 | 2 | ... | ... | ... | ... | ... | ... | ... | ... |
| 3 | + | 53 | 54 | 13 | 7 | 10 | 5 | ... | 2 | 1 | ... | ... | ... | ... | ... | ... |
| | − | 75 | 63 | 15 | 5 | 6 | ... | 1 | 1 | ... | ... | 1 | 1 | ... | ... | ... |
| 4 | + | 73 | 38 | 19 | 8 | 5 | 6 | ... | 1 | ... | ... | ... | ... | ... | ... | ... |
| | − | 87 | 50 | 14 | 2 | 1 | 2 | 2 | 2 | 1 | 1 | 1 | ... | ... | ... | ... |
| 5 | + | 70 | 42 | 20 | 11 | 6 | 1 | 2 | ... | ... | ... | 1 | ... | ... | ... | ... |
| | − | 100 | 33 | 11 | 6 | 2 | 1 | 2 | ... | 1 | 1 | 1 | 1 | 1 | ... | ... |
| 6 | + | 80 | 41 | 27 | 23 | 7 | 5 | ... | 2 | 1 | ... | ... | ... | ... | ... | ... |
| | − | 63 | 26 | 9 | 6 | 5 | 1 | 5 | 3 | ... | 1 | 6 | ... | ... | ... | 2 |
| 7 | + | 92 | 68 | 34 | 10 | 7 | ... | ... | ... | ... | ... | 1 | ... | ... | ... | ... |
| | − | 42 | 15 | 13 | 8 | 4 | 6 | 4 | 2 | ... | 1 | 5 | 1 | 1 | ... | ... |
| 8 | + | 81 | 60 | 46 | 21 | 9 | ... | 3 | 1 | ... | ... | 1 | ... | ... | ... | ... |
| | − | 25 | 16 | 9 | 11 | 8 | 4 | 2 | 4 | 2 | 1 | 5 | 2 | 1 | 2 | ... |
| 9 | + | 78 | 85 | 33 | 9 | ... | 1 | ... | ... | ... | 2 | 1 | ... | ... | ... | ... |
| | − | 36 | 12 | 15 | 10 | 7 | 10 | 6 | 3 | 3 | ... | 2 | 1 | ... | ... | ... |
| 10 | + | 86 | 87 | 22 | 9 | 3 | 2 | 2 | 2 | ... | ... | ... | ... | ... | ... | ... |
| | − | 30 | 20 | 14 | 11 | 6 | 6 | 3 | 1 | 1 | 3 | 3 | 1 | 1 | ... | ... |
| 11 | + | 74 | 65 | 44 | 16 | 7 | 1 | 1 | ... | ... | ... | ... | ... | ... | ... | ... |
| | − | 34 | 18 | 16 | 13 | 7 | 6 | 3 | ... | 2 | 1 | 2 | 2 | ... | 2 | ... |

TABLE XXI.—Number of differences in 1000 (without reference to sign), which occur between the limits of successive minutes in each hour of 1844.

| Mak. M. T. | 0′ to 1′. | 1′ to 2′. | 2′ to 3′. | 3′ to 4′. | 4′ to 5′. | 5′ to 6′. | 6′ to 7′. | 7′ to 8′. | 8′ to 9′. | 9′ to 10′. | 10′ to 15′. | 15′ to 20′ | 20′ to 25′. | 25′ to 30.′ | 30′ to 40′. |
|---|---|---|---|---|---|---|---|---|---|---|---|---|---|---|---|
| h. | | | | | | | | | | | | | | | |
| 12 | 427 | 264 | 156 | 48 | 25 | 13 | 19 | 13 | 10 | 3 | 10 | 6 | 3 | ... | ... |
| 13 | 455 | 280 | 99 | 45 | 35 | 25 | 10 | 6 | 19 | 13 | 6 | 3 | ... | 3 | ... |
| 14 | 510 | 220 | 124 | 38 | 35 | 19 | 16 | 13 | 3 | 3 | 6 | 3 | ... | ... | ... |
| 15 | 446 | 261 | 118 | 76 | 38 | 16 | 16 | ... | 6 | ... | 3 | ... | ... | ... | ... |
| 16 | 525 | 210 | 137 | 51 | 13 | 16 | 16 | 3 | 3 | 10 | 16 | ... | ... | ... | ... |
| 17 | 513 | 248 | 111 | 48 | 25 | 16 | 10 | 3 | ... | ... | 19 | ... | ... | 3 | ... |
| 18 | 519 | 248 | 124 | 45 | 6 | 29 | 6 | 3 | 6 | ... | 6 | 3 | 3 | ... | ... |
| 19 | 484 | 306 | 127 | 22 | 29 | 13 | ... | 3 | 6 | ... | 3 | 6 | ... | ... | ... |
| 20 | 497 | 242 | 150 | 51 | 16 | 16 | 16 | ... | ... | 3 | 6 | ... | ... | ... | ... |
| 21 | 433 | 299 | 150 | 61 | 22 | 3 | 3 | 6 | ... | 6 | 13 | ... | ... | ... | ... |
| 22 | 465 | 299 | 137 | 54 | 13 | ... | 19 | 3 | 3 | ... | 6 | ... | ... | ... | ... |
| 23 | 436 | 312 | 153 | 57 | 16 | 6 | 10 | 3 | ... | ... | 3 | ... | ... | ... | ... |
| 0 | 481 | 264 | 150 | 54 | 16 | 10 | 3 | 3 | 6 | 3 | ... | 6 | ... | ... | ... |
| 1 | 494 | 261 | 127 | 80 | 19 | ... | 10 | ... | 3 | 3 | ... | ... | ... | ... | ... |
| 2 | 411 | 341 | 137 | 61 | 16 | 13 | 6 | 16 | ... | ... | ... | ... | ... | ... | ... |
| 3 | 408 | 373 | 89 | 38 | 51 | 16 | 3 | 10 | 3 | ... | 3 | ... | 3 | ... | ... |
| 4 | 510 | 280 | 105 | 32 | 19 | 25 | 6 | 10 | 3 | 3 | 3 | ... | ... | ... | ... |
| 5 | 541 | 239 | 99 | 54 | 25 | 6 | 13 | ... | 3 | 3 | 6 | 3 | 3 | ... | ... |
| 6 | 455 | 213 | 115 | 92 | 38 | 19 | 16 | 16 | 3 | 3 | 19 | ... | ... | ... | 6 |
| 7 | 427 | 264 | 150 | 57 | 35 | 19 | 13 | 6 | ... | 3 | 19 | 3 | 3 | ... | ... |
| 8 | 338 | 242 | 175 | 102 | 54 | 13 | 16 | 16 | 6 | 3 | 19 | 6 | 3 | 6 | ... |
| 9 | 363 | 309 | 153 | 61 | 22 | 35 | 19 | 10 | 10 | 6 | 10 | 3 | ... | ... | ... |
| 10 | 369 | 341 | 115 | 64 | 29 | 25 | 16 | 10 | 3 | 10 | 10 | 3 | 3 | ... | ... |
| 11 | 344 | 264 | 191 | 92 | 45 | 22 | 13 | ... | 6 | 3 | 6 | 6 | ... | 6 | ... |

*Note on the Diurnal Variation of the Magnetic Declination.*—It is obvious from the previous investigations that the diurnal variation is a compound phenomenon; in its observed form it presents a curve with two maxima and two minima, the principal maximum occurring immediately after noon, the secondary maximum shortly after midnight, and the principal minimum about $10^h$ P.M. or $6^h$ A.M., at the former if the amount of disturbance for the year be considerable. When the diurnal variation is considered in days nearly free from intermittent disturbance, it is found that the minimum about $10^h$ P.M. almost wholly disappears, and the minimum about $6^h$ A.M. is increased. Although, however, the $10^h$ P.M. minimum and the secondary maximum wholly disappear, the diurnal curve, even when unaffected by disturbance, does not become a regular curve of two branches; on the contrary, there is still evidence of the action of a secondary or superposed cause of variation in the flattening of the curve from about $6^h$ P.M. till about $2^h$ A.M., in the sudden check in the rate of the easterly progression about $6^h$ P.M., and its sudden increase again about $2^h$ A.M. These epochs, it will be observed, are the times of the principal minimum and maximum for our periœci. We might suppose the diurnal variation, therefore, when unaffected by intermittent disturbances, due to two operations of the same cause, a direct action proper to one side of a zone producing a regular motion having its greatest westerly limit after noon, and its most easterly limit about $6^h$ A.M.; and an indirect or reflected action upon the opposite side of the same zone producing similar motions simultaneously, but of less magnitude. Such a hypothesis, which has an analogy to that of tides (say in the atmosphere), would satisfy the simplest form of the diurnal curve for the year, and for all the months for which the sun is north of the equator; another element perhaps requires consideration for the winter months.

The form of the diurnal curve is different at different seasons of the year. Colonel SABINE has shewn, in his discussion of the St Helena Observations, that the diurnal curve has two opposite forms at St Helena, according as the sun is to the north or south of the equator; the one corresponding to the diurnal motion for the northern hemisphere, the other to that for the southern hemisphere. An examination of the Makerstoun Observations will shew an equivalent fact. During the months that the sun is north of the equator the form and range of the diurnal curve have but little variation, but they change considerably in the months for which the sun is south of the equator. If we take the means of the 10 days of least disturbance in the two months

of June and July as the most perfect representative of the diurnal curve at Makerstoun for the sun north of the equator, and compare this curve with that similarly obtained for the months of December and January when the sun is farthest south, we obtain the following variations corresponding to the differences of the hourly means for the two curves :—

| 12h | 1h A.M. | 2h | 3h | 4h | 5h | 6h | 7h | 8h | 9h | 10h | 11h | 0h | 1h P.M. | 2h | 3h | 4h | 5h | 6h | 7h | 8h | 9h | 10h | 11h |
|---|---|---|---|---|---|---|---|---|---|---|---|---|---|---|---|---|---|---|---|---|---|---|---|
| 3'·43 | 4'·12 | 4'·22 | 5'·00 | 5'·69 | 7'·12 | 7'·89 | 7'·77 | 6'·85 | 5'·56 | 4'·47 | 2'·29 | 1'·32 | 0'·40 | 0'·00 | 0'·16 | 1'·44 | 2'·09 | 2'·39 | 2'·21 | 2'·09 | 2'·39 | 2'·54 | 3'·09 |

It follows, therefore, that by the addition of the above quantities, representing the motion of the magnetic needle for the southern hemisphere, which has its maximum of westerly declination about 6h A.M., and its minimum about 2h P.M., to the quantities representing the diurnal motion for midsummer at Makerstoun, we obtain variations which represent the midwinter motion for the same place. The same result is obtained in the comparison of the midsummer curve with that for November and February, and even for October and March, though with less accuracy as regards the epoch of minimum for the differences.

It will be interesting to determine, from other observations, the latitude for which the midwinter curve ceases to have the characteristic of a northern curve.

## HORIZONTAL COMPONENT OF MAGNETIC FORCE.

TABLE XXII.—Mean Values of the Variations of the Horizontal Component of Magnetic Force, the whole Horizontal Component being Unity, for each Civil Week-Day, Week, and Month of 1844.

| Civil. Day. | Jan. | Feb. | March. | April. | May. | June. | July. | Aug. | Sept. | Oct. | Nov. | Dec. |
|---|---|---|---|---|---|---|---|---|---|---|---|---|
| | 0·00 | 0·00 | 0·00 | 0·00 | 0·00 | 0·00 | 0·00 | 0·00 | 0·00 | 0·00 | 0·00 | 0·00 |
| 1 | 2499 | 3002 | 2850 | 1933 | 2842 | 4579 | 4224 | 5142 | [4110] | 2943 | 5002 | [5257] |
| 2 | 2187 | 2264 | 2849 | 2170 | 3437 | [4291] | 4635 | 3391 | 3931 | 4172 | 4607 | 5429 |
| 3 | 2719 | 2374 | [2395] | 2338 | 3104 | 4175 | 4732 | 3608 | 4109 | 4147 | [4791] | 5338 |
| 4 | 2969 | [2347] | 2428 | 2237 | 2842 | 4392 | 4668 | [4095] | 4424 | 4299 | 4635 | 5400 |
| 5 | 2755 | 2080 | 1970 | 3195 | [3326] | 4280 | 4430 | 4228 | 4322 | 4319 | 4749 | 5097 |
| 6 | 2376 | 2134 | 1700 | 2533 | 3798 | 4355 | 4313 | 4095 | 4246 | [4411] | 4983 | 5228 |
| 7 | [2519] | 2227 | 2083 | [2904] | 3431 | 4336 | [4495] | 4109 | 4974 | 4627 | 4903 | 5404 |
| 8 | 2474 | 2401 | 1898 | 2780 | 3345 | 4018 | 5209 | 4603 | [4547] | 4292 | 4976 | [5439] |
| 9 | 2171 | 2671 | 2493 | 3237 | 3170 | [4301] | 4054 | 5267 | 4438 | 4782 | 5114 | 5624 |
| 10 | 2363 | 2559 | [2401] | 3443 | 3550 | 4446 | 4298 | 3920 | 4511 | 4840 | [4822] | 5548 |
| 11 | 2485 | [2767] | 2521 | 3151 | 3412 | 4140 | 4494 | [4505] | 4792 | 4900 | 4816 | 5734 |
| 12 | 2454 | 2743 | 2471 | 3367 | [3515] | 4511 | 4778 | 4267 | 4663 | 4742 | 4431 | 5708 |
| 13 | 2709 | 3004 | 2936 | 3363 | 3682 | 4890 | 4882 | 4362 | 4792 | [4871] | 4687 | 5575 |
| 14 | [2692] | 3224 | 3200 | [3277] | 3660 | 4430 | [4748] | 4613 | 4809 | 5106 | 4970 | 5268 |
| 15 | 2748 | 3172 | 3210 | 3321 | 3615 | 4371 | 5064 | 4585 | [4595] | 4761 | 5239 | [5305] |
| 16 | 2853 | 2856 | 3004 | 3063 | 3580 | [4479] | 4649 | 4630 | 4553 | 4872 | 4619 | 4714 |
| 17 | 2905 | 3496 | [3065] | 3396 | 3490 | 4388 | 4619 | 4572 | 4319 | 4676 | [4612] | 5078 |
| 18 | 2849 | [3183] | 3077 | 2549 | 4012 | 4533 | 4224 | [4696] | 4434 | 5016 | 4309 | 5484 |
| 19 | 2803 | 3212 | 2797 | 2733 | [3998] | 4260 | 4297 | 4634 | 4602 | 5187 | 3970 | 4963 |
| 20 | 2660 | 3228 | 3097 | 2730 | 4417 | 4502 | 4749 | 4910 | 4383 | [4234] | 4564 | 4868 |
| 21 | [2866] | 3135 | 3121 | [3167] | 4494 | 4539 | [4487] | 4847 | 3826 | 2514 | 4637 | 4589 |
| 22 | 2761 | 3013 | 3164 | 3510 | 3998 | 4222 | 4603 | 4795 | [4367] | 4026 | 4050 | [5064] |
| 23 | 3265 | 3028 | 3108 | 3752 | 3419 | [4333] | 4600 | 4591 | 4386 | 3979 | 3437 | 5201 |
| 24 | 2859 | 3476 | [3263] | 3727 | 3885 | 4176 | 4446 | 3919 | 4743 | 4252 | [4551] | 5358 |
| 25 | 2660 | [3129] | 3304 | 3650 | 3990 | 4119 | 4949 | [4362] | 4257 | 3573 | 4780 | 5405 |
| 26 | 2733 | 3294 | 3412 | 2614 | [3858] | 4441 | 4252 | 4438 | 3861 | 3536 | 5008 | 5453 |
| 27 | 2764 | 3140 | 3473 | 2488 | 3919 | 4403 | 4648 | 4095 | 3609 | [4052] | 5394 | 5562 |
| 28 | [2672] | 2822 | 3090 | [2951] | 4017 | 5097 | [4634] | 4337 | 4011 | 3997 | 5068 | 5055 |
| 29 | 2465 | 2580 | 2030 | 3161 | 3920 | 5025 | 4312 | 4586 | [3763] | 4357 | 5138 | [4829] |
| 30 | 2825 | | −0091 | 2953 | 3906 | [4686] | 4407 | 3921 | 3984 | 4598 | 5173 | 3923 |
| 31 | 2583 | | [1911] | | 4414 | | 5233 | 3692 | | 4777 | | 4502 |
| Mean | 2663 | 2845 | 2661 | 2976 | 3679 | 4425 | 4584 | 4376 | 4360 | 4344 | 4740 | 5212 |

Table XXII. has been formed from the daily means in scale divisions by the following formula :—

$$f=(n-500)\ 0{\cdot}000140,$$

where $f$ is the mean in the Table, $n$ is the mean in scale divisions, 500 scale divisions being taken as the zero; the corresponding zero for the same adjustment in the end of 1843 was 484·93; in order, therefore, to render the means for 1844 comparable with those for 1843, 15·07 × 0·00014 = 0·002110 must be added to the former, 0·001000 being subtracted from the latter, and the differences multiplied by 1·316. See *Introduction, Bifilar Magnetometer.*

The mean value of the horizontal component from Table XXII. = 0·003605.

*Secular Change.*—When the monthly means at the foot of Table XXII., and the monthly means for 1843 (as corrected, p. 231, line 6, 1843), are rendered comparable, as indicated after Table XXII., we have the following monthly means for the two years, with the corresponding secular changes :—

| | | Jan. | Feb. | March. | April. | May. | June. | July. | Aug. | Sept. | Oct. | Nov. | Dec. |
|---|---|---|---|---|---|---|---|---|---|---|---|---|---|
| 1844, | 0·00 | 4773 | 4955 | 4771 | 5086 | 5789 | 6535 | 6694 | 6486 | 6470 | 6454 | 6850 | 7322 |
| 1843, | 0·00 | 0932 | 0917 | 0661 | 0903 | 1848 | 2328 | 2214 | 2307 | 2690 | 2903 | 3664 | 4183 |
| Secular change, | +0·00 | 3841 | 4038 | 4110 | 4183 | 3941 | 4207 | 4480 | 4179 | 3780 | 3551 | 3186 | 3139 |

The value of the secular change, as deduced from the monthly comparisons, does not vary greatly till October, after which it diminishes considerably.

The mean secular change corresponding to 1st July 1843, till 1st July 1844, . = +0·003886

A comparison of the mean value of the component for 1844, with that for 1845, shews that the amount of the secular change has continued to diminish, the mean corresponding to 1st July 1844, till 1st July 1845, being only +0·001436. As it is desirable, in some case, to eliminate the secular change in order to exhibit other laws with more distinctness, the mean of these two determinations has been taken as the secular change for 1844, or,

The mean secular change corresponding to 1st January 1844, till 1st January 1845, . = +0·002661

This quantity is nearly the same as that obtained from a comparison of November and December 1843, January and February 1844 with November and December 1844, January and February 1845.

*Annual Period.*—From the means at the foot of Table XXII., the horizontal component does not vary greatly in value from January till April, but it increases rapidly from April till June, after which it is nearly constant again till October, increasing again in November and December. It appears, therefore, that the secular increase is neutralized for three months after the solstices, and augmented in the three months after the equinoxes. In order to shew the law of the annual variation independent of the secular change, the latter has been eliminated from the means at the foot of Table XXII. by the application of the correction $-n$ 0·000222, where $n$ is the number of the month after January: the means, thus corrected, are—

| | Jan. | Feb. | March. | April. | May. | June. | July. | Aug. | Sept. | Oct. | Nov. | Dec. |
|---|---|---|---|---|---|---|---|---|---|---|---|---|
| 0·00 | 2663 | 2623 | 2217 | 2310 | 2791 | 3315 | 3252 | 2822 | 2584 | 2346 | 2520 | 2770 |

These means exhibit the law already concluded from the observations for 1842 and 1843—namely, that the *horizontal component is a minimum near the equinoxes, and a maximum near the solstices.* The secular increase is diminishing in value, and therefore the application of a constant correction from month to month cannot be quite accurate; any other mode of elimination, however, could only have affected the values of the maxima and minima; the epochs would remain as stated above.

It should be remarked, with respect to this law, that the variations of the magnetic dip are best represented in this latitude by the bifilar magnetometer: this is not the case, however, in low latitudes; in these, the variations of intensity are best represented in the horizontal component; if, therefore, the magnetic dip and magnetic intensity have each an equally well-marked annual period with different epochs, the same

instrument will indicate a different law in high and low latitudes.* See the discussion for the effect of disturbances on the monthly means for other considerations affecting the annual variation.

*Differences of the Daily Means from the Monthly Means.*—The following are the average differences of the daily means from their corresponding monthly means :—

| | Jan. | Feb. | March. | April. | May. | June. | July. | Aug. | Sept. | Oct. | Nov. | Dec. |
|---|---|---|---|---|---|---|---|---|---|---|---|---|
| 0·000 | 191 | 356 | 548 | 436 | 342 | 185 | 241 | 366 | 278 | 476 | 323 | 318 |

The daily means, therefore, differ least from the monthly means near the solstices, and most near the equinoxes, the average difference for the latter being nearly three times that for the former. As in the case of the similar discussion for the declination, this law is also related to the annual period, and may be similarly generalized. The average difference of the daily mean from the monthly mean is a minimum when the horizontal component is a maximum, and *vice versa*. This correspondence is the more remarkable, since the epochs for the greatest and least average differences are not the same for the magnetic declination and horizontal component.

The following are the averages of the positive and of the negative differences :—

| | Jan. | Feb. | March. | April. | May. | June. | July. | Aug. | Sept. | Oct. | Nov. | Dec. |
|---|---|---|---|---|---|---|---|---|---|---|---|---|
| +0·000 | 172 | 317 | 445 | 404 | 355 | 193 | 217 | 353 | 248 | 459 | 280 | 258 |
| −0·000 | 215 | 404 | 712 | 472 | 330 | 178 | 271 | 380 | 316 | 494 | 382 | 413 |

The negative departures from the monthly means are greatest; in only two months, May and June, are the positive differences of a greater value than the negative differences.

TABLE XXIII.—Mean Variations of the Horizontal Component of Magnetic Force, after eliminating the Secular Change, with reference to the Moon's Age, Declination, and Distance from the Earth, for 1844.

| Moon's Age. | Variation of Horizontal Component. | Moon's Age. | Variation of Horizontal Component. | After Moon farthest North. | Variation of Horizontal Component. | After Moon farthest North. | Variation of Horizontal Component. | Before and after Perigee. | Variation of Horizontal Component. | Before and after Apogee. | Variation of Horizontal Component. |
|---|---|---|---|---|---|---|---|---|---|---|---|
| Day. | 0·00 | Day. | 0·00 | Day. | 0·00 | Day. | 0·00 | Day. | 0·00 | Day. | 0·00 |
| 15 | 0133 | 0 | 0607 | 0 | 0499 | 14 | 0450 | 7 | 0242 | 7 | 0283 |
| 16 | 0172 | 1 | 0486 | 1 | 0484 | 15 | 0510 | 6 | 0164 | 6 | 0314 |
| 17 | 0036 | 2 | 0546 | 2 | 0589 | 16 | 0522 | 5 | 0000 | 5 | 0123 |
| 18 | 0120 | 3 | 0520 | 3 | 0408 | 17 | 0449 | 4 | 0131 | 4 | 0052 |
| 19 | 0000 | 4 | 0608 | 4 | 0259 | 18 | 0393 | 3 | 0188 | 3 | 0092 |
| 20 | 0203 | 5 | 0572 | 5 | 0057 | 19 | 0339 | 2 | 0206 | 2 | 0065 |
| 21 | 0285 | 6 | 0489 | 6 | 0148 | 20 | 0333 | 1 | 0202 | 1 | 0079 |
| 22 | 0320 | 7 | 0506 | 7 | 0175 | 21 | 0151 | P | 0341 | A | 0164 |
| 23 | 0301 | 8 | 0510 | 8 | 0255 | 22 | 0200 | 1 | 0366 | 1 | 0280 |
| 24 | 0452 | 9 | 0235 | 9 | 0259 | 23 | 0210 | 2 | 0305 | 2 | 0455 |
| 25 | 0526 | 10 | 0067 | 10 | 0245 | 24 | 0000 | 3 | 0271 | 3 | 0473 |
| 26 | 0492 | 11 | 0130 | 11 | 0436 | 25 | 0199 | 4 | 0383 | 4 | 0457 |
| 27 | 0606 | 12 | 0008 | 12 | 0387 | 26 | 0129 | 5 | 0365 | 5 | 0433 |
| 28 | 0550 | 13 | 0119 | 13 | 0471 | 27 | 0339 | 6 | 0439 | 6 | 0218 |
| 29 | 0600 | 14 | 0028 | | | | | 7 | 0203 | 7 | 0070 |

This Table has been formed in the same manner as Table II., the rate of secular change employed being $= +0{\cdot}002661$ *per annum*, or $= +0{\cdot}0000073$ *per diem*.

* The law for the annual period of the horizontal component has been confirmed by the discussions of the observations at Makerstoun for *each* of the years 1842, 1843, 1844, and 1845; it has also been confirmed by a discussion of the observations made at Toronto in 1842 (see Transactions of the Royal Society of Edinburgh, Vol. xvi., pp. 102–103). Dr LAMONT has not been able to conclude any distinct law from the observations made at Munich (Resultate des magnetischen Observatoriums in München, 1843—1845, p. 28); this, it appears to me, is due to the mode of discussion adopted. Dr LAMONT combines the monthly means into quarterly periods, January, February, and March being the first, a mode of combination the best fitted to disguise the law, since each period includes the whole range of the variations. Neglecting the means of the Munich Observations for 1842, which were broken up in May by

*Variation of the Horizontal Component with reference to the Moon's Age.*—This law is very distinctly marked in the means given in Table XXIII. The *horizontal component of magnetic force is a minimum at opposition, and a maximum at conjunction.* This will be more evident from the following means of groups:—

| | | | |
|---|---|---|---|
| 14 days to 16 days, Full Moon, | 0·000111 | 29 days to 1 day, New Moon, | 0·000564 |
| 17 ..... 20 ... | 0·000090 | 2 ..... 5 ... | 0·000561 |
| 21 ..... 24 ... | 0·000339 | 6 ..... 9 ... | 0·000435 |
| 25 ..... 28 ... | 0·000543 | 10 ..... 13 ... | 0·000081 |

An examination of the daily means of the horizontal component shews, that this law is indicated with great distinctness in seven or eight lunations of 1844,—namely, in the lunations between January 5 and April 3, and between August 2 and December 20. The law is distorted or exaggerated in some lunations by the larger disturbances. In all probability, the mean range is exaggerated by the larger negative disturbances which appear to have occurred about full Moon in 1844.

*Variations of the Horizontal Component with reference to the Moon's Declination.*—This law is also well marked in the means in Table XXIII. The horizontal component is a maximum when the moon has its greatest north, and also its greatest south declination; and it is a minimum between these epochs, when the moon is rather north of the equator. The following are means of groups:—

| | | | |
|---|---|---|---|
| 27 days to 1 day, Moon farthest north, | 0·000441 | 13 days to 15 days, Moon farthest south, | 0·000477 |
| 2 ..... 5 days | 0·000328 | 16 ..... 19 ... | 0·000426 |
| 6 ..... 8 ... | 0·000193 | 20 ..... 22 ... | 0·000228 |
| 9 ..... 12 ... | 0·000332 | 23 ..... 26 ... | 0·000134 |

This law corresponds with that of the annual period, and may be stated, generally, as follows:—The horizontal component is a maximum when the sun or moon has its greatest north and south declination, and it is a minimum between these epochs, when the sun or moon is near the equator.

*Annual Variation of the Diurnal Ranges of the Horizontal Component.*—The following are the monthly means of the diurnal ranges:—

| | Jan. | Feb. | March. | April. | May. | June. | July. | Aug. | Sept. | Oct. | Nov. | Dec. |
|---|---|---|---|---|---|---|---|---|---|---|---|---|
| 0·00 | 1920 | 2750 | 4980 | 4990 | 4510 | 3710 | 4290 | 4600 | 4020 | 3690 | 3140 | 2510 |

The diurnal range is therefore a minimum in January, a secondary minimum in June, a maximum in April, and in August; or generally, it is a minimum near the solstices, and a maximum immediately after the vernal and before the autumnal equinox. In the annual variations, therefore, it appears that when the horizontal component is a maximum, the diurnal range is a minimum, and *vice versa.*

The mean of the diurnal ranges for the year = 0·003760.

When the means of the diurnal ranges are compared with the ranges of the mean diurnal variations (see p. 363), we obtain the following excesses of the former compared with the latter:—

| | Jan. | Feb. | March. | April. | May. | June. | July. | Aug. | Sept. | Oct. | Nov. | Dec. |
|---|---|---|---|---|---|---|---|---|---|---|---|---|
| 0·00 | 1230 | 1675 | 2785 | 1612 | 0866 | 0531 | 0633 | 1099 | 1074 | 1377 | 1835 | 1750 |

Whence it appears, that the causes which render the mean diurnal range greater than the range of the mean diurnal variation, have their minimum effect in June, a secondary minimum being in January; their maximum in March, and a secondary maximum in November. This is the same result as that already obtained for the magnetic declination.

some instrumental causes, and considering the means for the last three years, commencing December 1842, we have the following quantities (Resultate, p. 77):—

| | Dec. | Jan. | Feb. | March. | April. | May. | June. | July. | Aug. | Sept. | Oct. | Nov. |
|---|---|---|---|---|---|---|---|---|---|---|---|---|
| 1·93 | 657 | 633 | 637 | 663 | 653 | 750 | 760 | 783 | 770 | 677 | 710 | 780 |

These means include the secular change, and they follow nearly the same law of variation as the means at the foot of Table XXII.; in fact, an examination of the above quantities will shew that any elimination of secular change which is near the truth will give the law as already stated. Taking the mean secular change from 1843—1845 = 0·0018 a-year (Resultate, p. 27), and reducing the values to December at the rate of 0·00015 a-month, we obtain the following means:—

| | Dec. | Jan. | Feb. | March. | April. | May. | June. | July. | Aug. | Sept. | Oct. | Nov. |
|---|---|---|---|---|---|---|---|---|---|---|---|---|
| 1·93 | 657 | 618 | 607 | 618 | 593 | 675 | 670 | 678 | 650 | 542 | 560 | 615 |

These appear to give a sufficiently distinct result; the horizontal component is a maximum in December and in June (May, June, and July having nearly the same value), and it is a minimum in April, and a principal minimum in September. This seems nearer to the results of the Makerstoun Observations than could be hoped for, when we consider the difference of instruments (Dr LAMONT's having a unifilar, and the Makerstoun instrument having a bifilar suspension), and the consequent liabilities to different kinds of instrumental error.

TABLE XXIV.—Diurnal Range of the Horizontal Component of Magnetic Force for each Civil Day, as deduced from the Hourly Observations, with the Mean for each Week in 1844.

| Civil Day. | Jan. | Feb. | March. | April. | May. | June. | July. | Aug. | Sept. | Oct. | Nov. | Dec. |
|---|---|---|---|---|---|---|---|---|---|---|---|---|
| | 0·0 | 0·0 | 0·0 | 0·0 | 0·0 | 0·0 | 0 0 | 0·0 | 0·0 | 0·0 | 0·0 | 0·0 |
| 1 | 0214 | 0605 | 0213 | 0476 | 0651 | 0374 | 0405 | 0788 | [0468] | 1273 | 0266 | [0220] |
| 2 | 0323 | 0707 | 0650 | 0498 | 0526 | [0347] | 0335 | 0692 | 0414 | 0332 | 0319 | 0144 |
| 3 | 0262 | 0423 | [0517] | 0834 | 0554 | 0350 | 0361 | 0521 | 0372 | 0290 | [0251] | 0162 |
| 4 | 0221 | [0511] | 0426 | 0372 | 0396 | 0260 | 0347 | [0494] | 0412 | 0293 | 0224 | 0330 |
| 5 | 0330 | 0318 | 0745 | 0244 | [0469] | 0417 | 0350 | 0395 | 0260 | 0238 | 0144 | 0231 |
| 6 | 0529 | 0679 | 0645 | 0427 | 0350 | 0360 | 0424 | 0354 | 0342 | [0288] | 0228 | 0179 |
| 7 | [0269] | 0337 | 1037 | [0349] | 0336 | 0307 | [0442] | 0214 | 0423 | 0262 | 0151 | 0105 |
| 8 | 0143 | 0245 | 0518 | 0315 | 0654 | 0396 | 0694 | 0276 | [0325] | 0448 | 0213 | [0150] |
| 9 | 0176 | 0210 | 0582 | 0353 | 0444 | [0364] | 0494 | 0879 | 0329 | 0204 | 0186 | 0109 |
| 10 | 0210 | 0213 | [0496] | 0381 | 0297 | 0428 | 0343 | 0606 | 0253 | 0211 | [0210] | 0157 |
| 11 | 0204 | [0181] | 0230 | 0224 | 0364 | 0402 | 0430 | [0423] | 0343 | 0245 | 0314 | 0120 |
| 12 | 0230 | 0141 | 0344 | 0214 | [0421] | 0291 | 0403 | 0323 | 0325 | 0256 | 0244 | 0105 |
| 13 | 0091 | 0168 | 0260 | 0230 | 0326 | 0288 | 0364 | 0213 | 0384 | [0230] | 0154 | 0123 |
| 14 | [0157] | 0104 | 0297 | [0517] | 0459 | 0245 | [0433] | 0239 | 0419 | 0214 | 0210 | 0421 |
| 15 | 0123 | 0155 | 0150 | 0343 | 0640 | 0400 | 0489 | 0351 | [0375] | 0192 | 0169 | [0238] |
| 16 | 0148 | 0123 | 0199 | 0197 | 0400 | [0377] | 0399 | 0484 | 0344 | 0256 | 1400 | 0431 |
| 17 | 0141 | 0322 | [0315] | 1894 | 0295 | 0440 | 0510 | 0482 | 0399 | 0244 | [0463] | 0105 |
| 18 | 0102 | [0158] | 0311 | 0725 | 0361 | 0554 | 0454 | [0407] | 0382 | 0256 | 0416 | 0244 |
| 19 | 0126 | 0115 | 0715 | 0392 | [0381] | 0329 | 0518 | 0347 | 0385 | 0304 | 0400 | 0326 |
| 20 | 0087 | 0099 | 0223 | 0342 | 0295 | 0469 | 0389 | 0399 | 0606 | [0441] | 0186 | 0636 |
| 21 | [0123] | 0139 | 0238 | [0420] | 0392 | 0448 | [0367] | 0385 | 0330 | 1334 | 0179 | 0343 |
| 22 | 0186 | 0245 | 0297 | 0351 | 0538 | 0270 | 0321 | 0521 | [0379] | 0256 | 1008 | [0279] |
| 23 | 0134 | 0088 | 0325 | 0347 | 0889 | [0363] | 0227 | 0927 | 0447 | 0252 | 0599 | 0130 |
| 24 | 0105 | 0123 | [0269] | 0361 | 0546 | 0284 | 0294 | 0384 | 0238 | 0195 | [0378] | 0111 |
| 25 | 0263 | [0225] | 0259 | 0848 | 0491 | 0314 | 0399 | [0479] | 0269 | 0402 | 0192 | 0130 |
| 26 | 0136 | 0122 | 0263 | 0847 | [0538] | 0388 | 0486 | 0316 | 0806 | 0931 | 0113 | 0228 |
| 27 | 0190 | 0154 | 0228 | 0903 | 0511 | 0307 | 0601 | 0350 | 0750 | [0381] | 0178 | 0204 |
| 28 | [0183] | 0617 | 0417 | [0683] | 0421 | 0367 | [0504] | 0379 | 0242 | 0284 | 0385 | 0281 |
| 29 | 0140 | 0424 | 1162 | 0440 | 0368 | 0588 | 0428 | 0455 | [0662] | 0221 | 0188 | [0342] |
| 30 | 0195 | | 2212 | 0409 | 0336 | [0393] | 0427 | 0638 | 0568 | 0252 | 0109 | 0769 |
| 31 | 0181 | | [0934] | | 0350 | | 0682 | 0515 | | 0325 | | 0413 |

TABLE XXV.—Means of the Diurnal Ranges of the Horizontal Component of Magnetic Force, with reference to the Moon's Age, Declination, and Distance from the Earth, for 1844.

| Moon's Age. | Mean Range. | Moon's Age. | Mean Range. | After Moon farthest North. | Mean Range. | After Moon farthest North. | Mean Range. | Before and after Perigee. | Mean Range. | Before and after Apogee. | Mean Range. |
|---|---|---|---|---|---|---|---|---|---|---|---|
| Day. | 0·00 | Day. | 0·00 | Day. | 0·00 | Day. | 0·00 | Day. | 0·00 | Day. | 0·00 |
| 15 | 4690 | 0 | 3982 | 0 | 3315 | 14 | 3644 | 7 | 4414 | 7 | 3871 |
| 16 | 4760 | 1 | 3587 | 1 | 3392 | 15 | 3136 | 6 | 3956 | 6 | 3112 |
| 17 | 4498 | 2 | 3149 | 2 | 3838 | 16 | 2925 | 5 | 5836 | 5 | 3846 |
| 18 | 4699 | 3 | 2761 | 3 | 4001 | 17 | 3800 | 4 | 3973 | 4 | 3995 |
| 19 | 4325 | 4 | 3126 | 4 | 4738 | 18 | 3517 | 3 | 3544 | 3 | 4338 |
| 20 | 3420 | 5 | 3197 | 5 | 5348 | 19 | 3944 | 2 | 3409 | 2 | 5376 |
| 21 | 3514 | 6 | 4326 | 6 | 4292 | 20 | 3682 | 1 | 3818 | 1 | 3774 |
| 22 | 3253 | 7 | 3442 | 7 | 4248 | 21 | 3962 | P | 3733 | A | 3464 |
| 23 | 2915 | 8 | 3647 | 8 | 3804 | 22 | 3402 | 1 | 3673 | 1 | 2564 |
| 24 | 2827 | 9 | 4083 | 9 | 4109 | 23 | 5391 | 2 | 3651 | 2 | 3268 |
| 25 | 3275 | 10 | 4987 | 10 | 3222 | 24 | 4894 | 3 | 3138 | 3 | 3297 |
| 26 | 2847 | 11 | 4729 | 11 | 3047 | 25 | 3423 | 4 | 2948 | 4 | 3260 |
| 27 | 2722 | 12 | 5449 | 12 | 3226 | 26 | 3538 | 5 | 4159 | 5 | 3710 |
| 28 | 2900 | 13 | 4765 | 13 | 2963 | 27 | 3095 | 6 | 3694 | 6 | 4392 |
| 29 | 2738 | 14 | 4681 | | | | | 7 | 3953 | 7 | 4843 |

Table XXV. has been formed from Table XXIV. in the manner described for Table II.

*Variations of the Diurnal Ranges of the Horizontal Component, with reference to the Moon's Age.*—The means in the first portion of Table XXV. shew that *the diurnal range of the horizontal component is a minimum about conjunction, and a maximum about opposition.* The same result has already been obtained for the magnetic declination. The following are means of groups :—

| | | | | | |
|---|---|---|---|---|---|
| 14 days to 16 days, | Full Moon, | 0·004710 | 29 days to 1 day, | New Moon, | 0·003436 |
| 17 ..... 20 ... | | 0·004235 | 2 ..... 5 ... | | 0·003058 |
| 21 ..... 24 ... | | 0·003127 | 6 ..... 9 ... | | 0·003874 |
| 25 ..... 28 ... | | 0·002936 | 10 ..... 13 ... | | 0·004982 |

There is the appearance of a secondary maximum at new moon. The remarks already made in the case of the magnetic declination, Table IV., are equally applicable here. In the case of this period, as well as that for the year, it appears that the diurnal range is a maximum when the horizontal component is a minimum, and *vice versa.*

*Variations of the Diurnal Range of the Horizontal Component with reference to the Moon's Declination.*—From the second portion of Table XXV., the diurnal range is a minimum when the moon has its greatest south and also its greatest north declination, and it is a maximum when the moon is near to, but north of, the equator. This result is also the same as that obtained for the magnetic declination. The following are means of groups :—

| | | | | | |
|---|---|---|---|---|---|
| 27 days to 1 day, | Moon farthest north, | 0·003267 | 13 days to 15 days, | Moon farthest south, | 0·003248 |
| 2 ..... 5 days, | | 0·004481 | 16 ..... 19 ... | | 0·003546 |
| 6 ..... 8 ... | | 0·004115 | 20 ..... 22 ... | | 0·003682 |
| 9 ..... 12 ... | | 0·003401 | 23 ..... 26 ... | | 0·004311 |

Here, also, as for the magnetic declination, we can say generally, that the diurnal range of the horizontal component of magnetic force is less when the sun or moon has its greatest north or south declination, than at the intermediate periods. In this case, also, the diurnal range is a maximum when the horizontal component is a minimum, and *vice versa.*

TABLE XXVI.—Hourly Means of the Scale Readings of the Bifilar Magnetometer, corrected for Temperature, 1844.

| Mean Time. Gött. | Mean Time. Mak. | Jan. | Feb. | March. | April. | May. | June. | July. | Aug. | Sept. | Oct. | Nov. | Dec. | Year. |
|---|---|---|---|---|---|---|---|---|---|---|---|---|---|---|
| h. | h. | Sc. Div. | Sc. Div. | Sc. Div. | Sc. Div. | Sc. Div. | Sc. Div. | Sc. Div. | Sc. Div. | Sc. Div. | Sc. Div. | Sc. Div. | Sc. Div. | Sc. Div. |
| 13 | 12 | 517·59 | 520·39 | 518·79 | 521·08 | 525·54 | 532·85 | 534·32 | 532·16 | 532·56 | 532·23 | 532·60 | 535·72 | 527·99 |
| 14 | 13 | 517·59 | 518·69 | 513·74 | 522·56 | 525·33 | 531·84 | 533·56 | 530·62 | 532·84 | 531·60 | 532·67 | 536·74 | 527·31 |
| 15 | 14 | 517·03 | 517·96 | 514·61 | 520·81 | 524·28 | 531·11 | 532·59 | 530·28 | 530·93 | 531·39 | 532·40 | 535·40 | 526·57 |
| 16 | 15 | 518·27 | 518·64 | 516·98 | 518·00 | 523·13 | 530·63 | 531·69 | 529·88 | 532·19 | 533·34 | 534·19 | 535·96 | 526·91 |
| 17 | 16 | 519·45 | 518·75 | 518·29 | 520·12 | 521·86 | 529·43 | 530·93 | 530·21 | 532·28 | 532·76 | 535·28 | 538·06 | 527·28 |
| 18 | 17 | 520·80 | 522·22 | 516·59 | 521·47 | 523·46 | 529·12 | 530·11 | 528·06 | 533·18 | 531·97 | 535·75 | 539·08 | 527·65 |
| 19 | 18 | 520·84 | 521·26 | 521·33 | 520·48 | 522·42 | 526·47 | 529·16 | 527·62 | 530·85 | 531·36 | 537·27 | 540·01 | 527·42 |
| 20 | 19 | 520·84 | 521·30 | 519·37 | 517·03 | 520·35 | 524·81 | 526·24 | 523·58 | 526·34 | 530·70 | 536·49 | 540·08 | 525·59 |
| 21 | 20 | 519·66 | 521·41 | 515·05 | 511·67 | 516·42 | 521·32 | 523·01 | 518·53 | 523·68 | 525·59 | 535·15 | 538·33 | 522·48 |
| 22 | 21 | 518·65 | 519·40 | 511·93 | 508·25 | 514·63 | 518·94 | 519·07 | 517·50 | 519·73 | 521·41 | 530·97 | 536·52 | 519·75 |
| 23 | 22 | 516·40 | 518·02 | 510·39 | 508·71 | 513·87 | 518·95 | 518·18 | 517·90 | 516·92 | 519·48 | 528·63 | 534·65 | 518·51 |
| 0 | 23 | 516·72 | 517·12 | 512·27 | 509·82 | 516·35 | 521·94 | 521·54 | 522·34 | 521·01 | 523·26 | 528·76 | 534·92 | 520·50 |
| 1 | 0 | 317·76 | 519·05 | 514·50 | 516·48 | 521·60 | 527·21 | 527·27 | 526·45 | 524·99 | 527·69 | 533·28 | 536·22 | 524·37 |
| 2 | 1 | 519·96 | 521·56 | 520·62 | 520·15 | 524·64 | 531·16 | 532·41 | 532·67 | 530·84 | 531·10 | 533·53 | 536·86 | 527·96 |
| 3 | 2 | 521·33 | 523·37 | 521·54 | 523·81 | 528·62 | 535·35 | 536·26 | 536·19 | 533·52 | 532·78 | 535·02 | 537·86 | 530·47 |
| 4 | 3 | 520·09 | 522·83 | 524·66 | 526·40 | 530·02 | 537·00 | 538·78 | 538·87 | 534·35 | 535·58 | 535·30 | 538·23 | 531·84 |
| 5 | 4 | 521·11 | 522·16 | 525·78 | 527·64 | 536·66 | 539·09 | 540·32 | 538·67 | 537·98 | 535·58 | 534·13 | 538·19 | 533·11 |
| 6 | 5 | 520·33 | 521·10 | 526·07 | 532·38 | 538·35 | 540·80 | 541·62 | 542·51 | 536·70 | 536·00 | 537·95 | 537·88 | 534·31 |
| 7 | 6 | 519·15 | 521·38 | 523·32 | 531·59 | 539·90 | 541·33 | 544·30 | 541·47 | 536·84 | 534·29 | 537·06 | 537·94 | 534·05 |
| 8 | 7 | 517·77 | 521·03 | 526·05 | 528·53 | 538·54 | 541·65 | 544·08 | 541·04 | 536·77 | 533·72 | 534·13 | 537·46 | 533·40 |
| 9 | 8 | 519·45 | 522·08 | 525·64 | 527·72 | 535·35 | 539·77 | 540·39 | 539·38 | 536·23 | 534·00 | 534·91 | 539·07 | 532·83 |
| 10 | 9 | 518·70 | 521·35 | 519·38 | 525·22 | 532·11 | 537·73 | 538·07 | 536·01 | 536·34 | 533·07 | 532·69 | 536·33 | 530·58 |
| 11 | 10 | 518·48 | 518·64 | 518·08 | 526·81 | 530·23 | 536·47 | 536·68 | 535·99 | 535·52 | 533·72 | 532·85 | 535·64 | 529·93 |
| 12 | 11 | 518·53 | 518·08 | 521·29 | 523·55 | 527·12 | 533·66 | 535·27 | 532·22 | 534·73 | 532·08 | 531·66 | 536·32 | 528·71 |

The true mean time at Makerstoun is $10^m$ in advance of the hours given in the second column of Table XXVI.

TABLE XXVII.—Diurnal Variations of the Horizontal Component of Magnetic Force in 1844.

| Mak. M. T. | Jan. | Feb. | March. | April. | May. | June. | July. | Aug. | Sept. | Oct. | Nov. | Dec. | Year. |
|---|---|---|---|---|---|---|---|---|---|---|---|---|---|
| h. | 0·00 | 0·00 | 0·00 | 0·00 | 0·00 | 0·00 | 0·00 | 0·00 | 0·00 | 0·00 | 0·00 | 0·00 | 0·00 |
| 12 | 0167 | 0458 | 1176 | 1796 | 1634 | 1947 | 2260 | 2052 | 2190 | 1785 | 0556 | 0150 | 1327 |
| 13 | 0167 | 0220 | 0469 | 2003 | 1604 | 1806 | 2153 | 1837 | 2229 | 1697 | 0566 | 0293 | 1233 |
| 14 | 0088 | 0118 | 0591 | 1758 | 1457 | 1704 | 2017 | 1789 | 1961 | 1667 | 0528 | 0105 | 1128 |
| 15 | 0262 | 0213 | 0923 | 1365 | 1296 | 1637 | 1891 | 1733 | 2138 | 1940 | 0778 | 0183 | 1176 |
| 16 | 0427 | 0228 | 1106 | 1662 | 1119 | 1469 | 1785 | 1779 | 2150 | 1859 | 0931 | 0477 | 1229 |
| 17 | 0616 | 0714 | 0868 | 1851 | 1343 | 1425 | 1670 | 1478 | 2276 | 1749 | 0997 | 0620 | 1280 |
| 18 | 0622 | 0580 | 1532 | 1712 | 1197 | 1054 | 1537 | 1417 | 1950 | 1663 | 1210 | 0750 | 1248 |
| 19 | 0622 | 0585 | 1257 | 1229 | 0907 | 0822 | 1126 | 0851 | 1319 | 1571 | 1100 | 0760 | 0992 |
| 20 | 0456 | 0601 | 0652 | 0479 | 0357 | 0333 | 0676 | 0144 | 0946 | 0855 | 0913 | 0515 | 0557 |
| 21 | 0315 | 0319 | 0216 | 0000 | 0106 | 0000 | 0125 | 0000 | 0393 | 0270 | 0328 | 0262 | 0174 |
| 22 | 0000 | 0126 | 0000 | 0064 | 0000 | 0001 | 0000 | 0056 | 0000 | 0000 | 0000 | 0000 | 0000 |
| 23 | 0045 | 0000 | 0263 | 0220 | 0347 | 0420 | 0470 | 0678 | 0573 | 0529 | 0018 | 0038 | 0279 |
| 0 | 0190 | 0270 | 0575 | 1152 | 1082 | 1158 | 1273 | 1253 | 1130 | 1149 | 0651 | 0220 | 0821 |
| 1 | 0498 | 0622 | 1432 | 1666 | 1508 | 1711 | 1992 | 2124 | 1949 | 1627 | 0686 | 0309 | 1323 |
| 2 | 0690 | 0875 | 1561 | 2178 | 2065 | 2297 | 2531 | 2617 | 2324 | 1862 | 0895 | 0449 | 1675 |
| 3 | 0517 | 0799 | 1998 | 2541 | 2261 | 2528 | 2884 | 2992 | 2440 | 2254 | 0934 | 0501 | 1867 |
| 4 | 0659 | 0706 | 2155 | 2715 | 3191 | 2821 | 3100 | 2964 | 2948 | 2254 | 0770 | 0496 | 2044 |
| 5 | 0550 | 0557 | 2195 | 3378 | 3427 | 3060 | 3282 | 3501 | 2769 | 2313 | 1305 | 0452 | 2212 |
| 6 | 0385 | 0596 | 1810 | 3268 | 3644 | 3135 | 3657 | 3356 | 2789 | 2073 | 1180 | 0461 | 2176 |
| 7 | 0192 | 0547 | 2192 | 2839 | 3454 | 3179 | 3626 | 3296 | 2779 | 1994 | 0770 | 0393 | 2084 |
| 8 | 0427 | 0694 | 2135 | 2726 | 3007 | 2916 | 3109 | 3063 | 2703 | 2033 | 0879 | 0619 | 2005 |
| 9 | 0322 | 0592 | 1259 | 2376 | 2554 | 2631 | 2785 | 2591 | 2719 | 1903 | 0568 | 0235 | 1691 |
| 10 | 0291 | 0213 | 1077 | 2598 | 2290 | 2454 | 2590 | 2589 | 2604 | 1994 | 0591 | 0139 | 1599 |
| 11 | 0298 | 0134 | 1526 | 2142 | 1855 | 2061 | 2393 | 2061 | 2493 | 1764 | 0424 | 0234 | 1428 |

*Diurnal Variation of the Horizontal Component.*—The following is the mean result for the year 1844:—The horizontal component is a minimum at $10^h\ 10^m$ A.M., after which hour it increases with its greatest rapidity, attaining its principal maximum at $5^h\ 30^m$ P.M.; it then begins to diminish, and continues to do so with considerable regularity till $2^h\ 10^m$ A.M., when there is a secondary minimum; it again increases slightly, and becomes a secondary maximum at $5^h\ 30^m$ A.M., after which it diminishes with its greatest rapidity to the principal minimum at $10^h\ 10^m$ A.M. The range of the mean diurnal variation is rather more than two thousandths of the whole horizontal component (0·0022). An examination of the monthly means will shew, that the two maxima and the two minima are each of nearly equal value in the winter months, the morning maximum being the principal maximum in the month of December; in the summer months, on the contrary, the secondary maximum and minimum nearly or altogether disappear. There are several irregularities, especially in the autumnal and winter months, which are evidently due to disturbances. The following are the approximate times of the principal minimum (−) and maximum (+), and of the secondary minimum and maximum:—

| | | Jan. | Feb. | March. | April. | May. | June. | July. | Aug. | Sept. | Oct. | Nov. | Dec. |
|---|---|---|---|---|---|---|---|---|---|---|---|---|---|
| −Min. | A.M. | $10^h 20^m$ | $11^h 0^m$ | $10^h 10^m$ | $9^h 30^m$ | $10^h 10^m$ | $9^h 40^m$ | $10^h 0^m$ | $9^h 30^m$ | $10^h 10^m$ | $9^h 50^m$ | $10^h 30^m$ | $10^h 30^m$ |
| +Max. | P.M. | 3·10 | 2·10 | 6·10 | 5·20 | 6·10 | 7·0 | 6·40 | 5·10 | 4·10 | 5·0 | 5·10 | 3·20 |
| Min. | A.M. | 2 | 1 | 1 | 3 | 4 | ... | ... | 3 | 2 | 1·30 | 11 P.M. | 1 A.M. |
| Max. | A.M. | 6·10 | 6 | 6 | 5 | 5 | ... | ... | 4 | 5 | 3 | 6·10 | 6·40 |

On the whole, it appears that the principal minimum occurs rather earlier in the day in the summer months than in the winter months, and that the principal or afternoon maximum occurs rather later in the day in the former than in the latter.

In order to examine the diurnal variation when freed, as far as possible, from the effects of irregular causes, the hourly observations on the days previously selected, Table VII., have been used. The following Tables contain diurnal variations for the ten days and for the five days in each month least affected by disturbances.

TABLE XXVIII.—Hourly Means of the Bifilar Magnetometer Scale Readings for the Ten Days least disturbed in each Month of 1844.

| Mak. M. T. | Jan. | Feb. | March. | April. | May. | June. | July. | Aug. | Sept. | Oct. | Nov. | Dec. | Year. |
|---|---|---|---|---|---|---|---|---|---|---|---|---|---|
| h. | Sc. Div. | Sc. Div. | Sc. Div. | Sc. Div. | Sc. Div. | Sc. Div. | Sc. Div. | Sc. Div. | Sc. Div. | Sc. Div. | Sc. Div. | Sc. Div. | Sc. Div. |
| 12 | 17·70 | 19·91 | 19·01 | 22·73 | 27·77 | 32·55 | 33·74 | 32·00 | 33·68 | 32·20 | 33·63 | 37·15 | 528·51 |
| 13 | 16·88 | 19·90 | 19·47 | 22·63 | 26·65 | 31·93 | 33·50 | 32·61 | 33·37 | 31·31 | 32·68 | 36·37 | 528·11 |
| 14 | 16·98 | 19·06 | 18·47 | 22·13 | 26·06 | 31·24 | 33·05 | 31·42 | 32·89 | 31·59 | 34·08 | 36·13 | 527·76 |
| 15 | 18·51 | 19·18 | 18·52 | 20·99 | 24·36 | 30·80 | 32·26 | 31·55 | 31·77 | 31·65 | 33·74 | 37·07 | 527·53 |
| 16 | 19·52 | 19·45 | 18·74 | 20·81 | 23·61 | 31·05 | 31·25 | 30·88 | 31·34 | 32·17 | 35·39 | 38·12 | 527·69 |
| 17 | 19·88 | 20·17 | 19·51 | 21·63 | 23·31 | 30·40 | 31·37 | 29·74 | 31·14 | 32·30 | 35·62 | 39·21 | 527·86 |
| 18 | 19·78 | 19·93 | 20·36 | 20·79 | 21·75 | 28·26 | 29·24 | 28·53 | 28·24 | 31·70 | 36·20 | 39·89 | 527·06 |
| 19 | 20·07 | 20·66 | 18·77 | 19·17 | 20·29 | 26·25 | 26·70 | 24·84 | 26·26 | 31·25 | 35·37 | 39·02 | 525·72 |
| 20 | 19·09 | 20·37 | 15·78 | 15·43 | 17·33 | 22·56 | 23·54 | 20·33 | 19·98 | 26·96 | 34·24 | 37·34 | 522·75 |
| 21 | 17·85 | 19·20 | 11·74 | 11·61 | 14·92 | 20·28 | 20·48 | 18·52 | 17·62 | 23·22 | 30·22 | 35·86 | 520·13 |
| 22 | 16·80 | 17·94 | 10·16 | 9·10 | 14·58 | 19·76 | 19·04 | 18·66 | 16·98 | 20·95 | 29·03 | 34·06 | 518·91 |
| 23 | 16·23 | 18·50 | 11·10 | 10·06 | 16·52 | 22·82 | 20·95 | 22·63 | 22·11 | 23·35 | 29·14 | 33·79 | 520·60 |
| 0 | 18·59 | 19·94 | 12·89 | 13·64 | 20·97 | 25·83 | 25·53 | 26·83 | 24·67 | 25·61 | 31·24 | 34·85 | 523·38 |
| 1 | 21·62 | 20·67 | 18·35 | 17·01 | 25·42 | 30·39 | 31·97 | 31·64 | 31·66 | 28·92 | 32·81 | 36·67 | 527·26 |
| 2 | 21·63 | 22·06 | 20·27 | 19·71 | 26·92 | 33·85 | 36·45 | 34·14 | 33·30 | 32·00 | 33·89 | 37·98 | 529·35 |
| 3 | 20·96 | 21·50 | 21·94 | 25·33 | 30·03 | 35·30 | 39·25 | 35·75 | 35·08 | 32·92 | 35·14 | 37·20 | 530·87 |
| 4 | 19·99 | 19·80 | 22·13 | 23·86 | 32·59 | 38·19 | 38·99 | 34·84 | 37·15 | 33·56 | 36·22 | 38·94 | 531·35 |
| 5 | 20·42 | 20·93 | 21·01 | 27·88 | 36·06 | 40·33 | 41·58 | 38·40 | 34·37 | 34·19 | 36·43 | 39·51 | 532·59 |
| 6 | 20·02 | 22·46 | 22·95 | 28·18 | 37·30 | 40·26 | 42·73 | 37·69 | 37·72 | 35·24 | 35·94 | 38·26 | 533·23 |
| 7 | 19·54 | 21·80 | 22·82 | 29·53 | 36·82 | 40·69 | 42·77 | 38·68 | 38·33 | 35·18 | 34·88 | 38·24 | 533·27 |
| 8 | 18·62 | 21·92 | 23·95 | 28·24 | 34·13 | 38·91 | 40·49 | 39·31 | 38·43 | 34·71 | 34·55 | 37·42 | 532·56 |
| 9 | 18·60 | 20·93 | 22·40 | 27·03 | 32·33 | 36·98 | 38·74 | 38·20 | 37·71 | 35·98 | 34·49 | 36·28 | 531·64 |
| 10 | 18·48 | 20·57 | 23·66 | 27·55 | 30·98 | 35·76 | 36·62 | 36·90 | 36·85 | 34·06 | 34·87 | 36·81 | 531·09 |
| 11 | 18·79 | 20·98 | 22·42 | 25·34 | 30·21 | 34·15 | 35·67 | 35·94 | 36·68 | 33·61 | 33·07 | 37·22 | 530·34 |

TABLE XXIX.—Hourly Means of the Bifilar Scale Readings for the Five Days least disturbed in each Month of 1844.

| Mak. M. T. | Jan. | Feb. | March. | April. | May. | June. | July. | Aug. | Sept. | Oct. | Nov. | Dec. | Year. |
|---|---|---|---|---|---|---|---|---|---|---|---|---|---|
| h. | Sc. Div. | Sc. Div. | Sc. Div. | Sc. Div. | Sc. Div. | Sc. Div. | Sc. Div. | Sc. Div. | Sc. Div. | Sc. Div. | Sc. Div. | Sc. Div. | Sc. Div. |
| 12 | 17·62 | 19·73 | 21·87 | 24·15 | 27·38 | 33·52 | 34·79 | 33·27 | 34·49 | 32·11 | 33·28 | 36·93 | 529·09 |
| 13 | 17·76 | 19·49 | 21·39 | 23·33 | 26·86 | 32·02 | 34·47 | 33·09 | 33·71 | 32·77 | 32·18 | 36·79 | 528·65 |
| 14 | 17·36 | 18·11 | 20·55 | 22·59 | 25·82 | 31·82 | 34·01 | 31·93 | 33·11 | 31·19 | 34·78 | 37·03 | 528·19 |
| 15 | 19·12 | 18·65 | 19·95 | 21·69 | 24·06 | 31·28 | 33·21 | 31·31 | 32·27 | 31·97 | 33·38 | 37·41 | 527·86 |
| 16 | 18·94 | 18·43 | 20·19 | 20·77 | 23·04 | 31·14 | 32·11 | 31·41 | 31·63 | 32·15 | 35·16 | 38·19 | 527·76 |
| 17 | 19·38 | 19·73 | 20·21 | 22·09 | 22·58 | 31·46 | 31·73 | 30·27 | 30·49 | 31·79 | 35·52 | 38·99 | 527·85 |
| 18 | 19·16 | 19·51 | 20·93 | 21·59 | 20·64 | 29·54 | 29·59 | 28·49 | 28·05 | 30·73 | 36·54 | 38·83 | 526·97 |
| 19 | 19·24 | 19·97 | 19·41 | 19·37 | 20·02 | 27·74 | 27·53 | 24·37 | 25·25 | 30·49 | 36·50 | 38·49 | 525·70 |
| 20 | 18·98 | 19·85 | 16·29 | 15·63 | 16·88 | 23·08 | 25·33 | 19·49 | 19·03 | 26·67 | 33·90 | 36·59 | 522·64 |
| 21 | 17·28 | 19·69 | 11·53 | 12·17 | 15·44 | 20·26 | 21·87 | 17·93 | 18·07 | 22·61 | 29·72 | 34·77 | 520·11 |
| 22 | 17·00 | 18·45 | 9·03 | 9·17 | 15·70 | 19·18 | 19·39 | 18·63 | 18·29 | 20·87 | 28·50 | 33·77 | 519·00 |
| 23 | 16·76 | 20·01 | 9·89 | 10·17 | 16·20 | 20·68 | 19·65 | 23·11 | 21·85 | 21·83 | 28·10 | 33·17 | 520·12 |
| 0 | 18·90 | 20·51 | 11·53 | 13·39 | 20·20 | 23·42 | 25·05 | 27·95 | 27·89 | 24·99 | 31·14 | 33·93 | 523·24 |
| 1 | 21·24 | 21·95 | 16·57 | 15·85 | 25·28 | 29·30 | 31·47 | 32·07 | 31·85 | 29·03 | 32·80 | 37·25 | 527·05 |
| 2 | 21·12 | 21·81 | 17·95 | 19·55 | 29·00 | 33·66 | 34·11 | 34·17 | 34·75 | 31·69 | 33·74 | 38·75 | 529·19 |
| 3 | 20·56 | 21·13 | 18·95 | 24·29 | 30·64 | 35·30 | 38·83 | 35·23 | 35·37 | 33·19 | 35·14 | 36·71 | 530·44 |
| 4 | 20·52 | 19·87 | 20·27 | 22·79 | 33·24 | 39·12 | 37·23 | 33·35 | 35·45 | 34·05 | 36·00 | 39·75 | 530·97 |
| 5 | 20·62 | 20·55 | 21·33 | 27·99 | 35·14 | 40·32 | 41·63 | 38·77 | 34·11 | 34·99 | 36·12 | 40·01 | 532·63 |
| 6 | 19·88 | 21·83 | 22·95 | 27·75 | 37·90 | 40·84 | 41·83 | 38·13 | 37·23 | 35·65 | 35·26 | 37·87 | 533·09 |
| 7 | 20·34 | 22·11 | 23·21 | 28·73 | 36·06 | 40·26 | 42·17 | 38·61 | 37·19 | 35·17 | 34·64 | 38·79 | 533·11 |
| 8 | 19·86 | 22·47 | 24·13 | 28·31 | 33·34 | 39·30 | 40·03 | 39·35 | 37·31 | 34·97 | 34·86 | 38·25 | 532·68 |
| 9 | 18·16 | 22·37 | 23·11 | 27·17 | 32·86 | 36·08 | 38·51 | 38·25 | 36·89 | 37·41 | 35·82 | 36·71 | 531·94 |
| 10 | 18·06 | 20·81 | 22·61 | 26·71 | 31·02 | 35·44 | 36·07 | 36·57 | 35·85 | 35·57 | 35·38 | 36·81 | 530·91 |
| 11 | 18·74 | 20·83 | 22·45 | 25·17 | 31·52 | 33·92 | 35·29 | 34·23 | 37·27 | 32·77 | 34·24 | 37·71 | 530·34 |

Considering, first, the mean for the sixty days—being the mean for the year—we find that the minimum of the horizontal component occurs, as before, at $10^h\ 10^m$ A.M.; the maximum occurs at $6^h\ 40^m$ P.M., being fully an hour after the epoch for the whole observations, and the secondary minimum is almost entirely obliterated. The same epochs are obtained from the mean for the 120 days; in this case, however, the secondary minimum is better marked. The secondary minimum and maximum are distinctly marked in the mean of the whole observations; they are still existent in the mean for the 120 days least disturbed, and scarcely evident in the mean of the 60 days least disturbed; in a more careful selection, therefore, it is probable that they would wholly disappear. This case is completely similar to that for the secondary maximum of the magnetic declination; and in this case, also, there is still a marked inflexion, which, however, can be at once traced to the duplicate form of the diurnal variation in the winter months. The following Table contains the approximate times of maximum and minimum for each month.

TABLE XXX.—Epochs of Maxima and Minima of the Horizontal Component of Magnetic Force, obtained from the Ten-Day and Five-Day series of observations, for each Month of 1844.

| Month. | 10 Days. | | | | 5 Days. | | | |
|---|---|---|---|---|---|---|---|---|
| | − Min. | + Max. | Min. | Max. | − Min. | + Max. | Min. | Max. |
| | h. m. | h. m. | h. m. | h. m. | h. m. | h. m. | h. m. | h. m. |
| January | 11·10 A.M. | 1·40 P.M. | 1·30 A.M. | 7·10 A.M. | 11·10 A.M. | 1·30 P.M. | 2·0 A.M. | 6·10 A.M. |
| February | 10·10 ... | 2·10 ...<br>6·10 ... | 2·30 ... | 7·30 ... | 10·10 ... | 1·30 ...<br>8·10 ... | 2·10 ... | 7·10 ... |
| March | 10·10 ... | 8·10 ... | 2·40 ... | 6·10 ... | 10·10 ... | 8·10 ... | 3·10 ... | 6·10 ... |
| April | 10·10 ... | 7·10 ... | 3·40? ... | 5·10? ... | 10·10 ... | 7·10 ... | 4·10? ... | 5·10? ... |
| May | 9·50 ... | 6·10 ... | ..... | ..... | 9·20 ... | 6·10 ... | ..... | ..... |
| June | 10·0 ... | 6·30 ... | 3·10? ... | 4·10? ... | 10·10 ... | 6·10 ... | 3·50? ... | 5·10? ... |
| July | 10·10 ... | 6·40 ... | ..... | ..... | 10·30 ... | 7·10 ... | ..... | ..... |
| August | 9·40 ... | 8·10 ... | ..... | ..... | 9·10 ... | 8·10 ... | ..... | ..... |
| September | 10·0 ... | 7·40 ... | ..... | ..... | 9·30 ... | 8· ... | ..... | ..... |
| October | 10·10 ... | 8· ... | 1·30 ... | 5·10 ... | 10·10 ... | 9·10 ... | 2·10 ... | 4·10 ... |
| November | 10·30 ... | 5·10 ... | 1·10 ... | 6·10 ... | 11·0 ... | 5·10 ...<br>9·10 ... | 1·10 ... | 6·40 ... |
| December | 11·0 ... | 5·10 ... | 1·40 ... | 6·10 ... | 11·10 ... | 5·0 ... | 12· ? ... | 5·40 ... |

From both series, the principal minimum occurs latest in the winter months, and perhaps earlier near the equinoxes than at the summer solstice; the principal maximum occurs earliest near the winter solstice, and about two hours later near the equinoxes than at the summer solstice.

On the whole, the principal maximum occurs earlier in the mean for the whole series, than in the means for the selected series—the effect of disturbances, therefore, being to accelerate the epoch of maximum. In all the three series there appear to be three maxima and three minima in the month of February, and these are most distinctly marked in the least disturbed,—the five-day series. These, and other more minute characteristics, will be better considered in connection with the discussion of the succeeding year's observations.

Intermittent disturbances seem to have less effect on the form of the diurnal variation of the horizontal component (and therefore, probably, the dip), than on the form of the variation for any of the other elements discussed.

*Ranges of the Mean Diurnal Variation.*—The following are the ranges of the monthly mean diurnal variation, as deduced from all the hourly observations, and from the hourly observations in the ten days and in the five days, selected as least affected by disturbances:—

| | Jan. | Feb. | March. | April. | May. | June. | July. | Aug. | Sept. | Oct. | Nov. | Dec. |
|---|---|---|---|---|---|---|---|---|---|---|---|---|
| All,..... 0·00 | 0690 | 0875 | 2195 | 3378 | 3644 | 3179 | 3657 | 3501 | 2948 | 2313 | 1305 | 0760 |
| 10 days, 0·00 | 0756 | 0633 | 1931 | 2860 | 3181 | 2930 | 3322 | 2911 | 3003 | 2104 | 1036 | 0854 |
| 5 days, 0·00 | 0627 | 0610 | 2114 | 2738 | 3144 | 3032 | 3189 | 2999 | 2694 | 2316 | 1182 | 0958 |

The ranges for the months for which the sun is north of the equator, differ little from each other, and the difference is least marked in the selected series. In the mean of all, January has the least range; but the means for the selected series give February the least; in all cases, the range for June is less than for the immediately preceding and succeeding months; but this difference is least evident in the series free from disturbances.

TABLE XXXI.—Mean Variations of the Horizontal Component of Magnetic Force, with reference to the Moon's Hour-Angle for each Lunation, for the Six Summer and Six Winter Lunations, and for the Twelve Lunations of 1844.

| Moon's Hour-Angle. | Lunations. | | | | | | | | | | | | | | |
|---|---|---|---|---|---|---|---|---|---|---|---|---|---|---|---|
| | 1st. | 2d. | 3d. | 4th. | 5th. | 6th. | 7th. | 8th. | 9th. | 10th. | 11th. | 12th. | Winter. | Summer. | Year. |
| h. | 0·00 | 0·00 | 0·00 | 0·00 | 0·00 | 0·00 | 0·00 | 0·00 | 0·00 | 0·00 | 0·00 | 0·00 | 0·00 | 0·00 | 0·00 |
| 0 | 0000 | 0118 | 0384 | 0967 | 0371 | 0321 | 0161 | 0337 | 0232 | 0549 | 0318 | 0153 | 0045 | 0231 | 0049 |
| 1 | 0266 | 0302 | 0276 | 0385 | 0468 | 0294 | 0160 | 0389 | 0228 | 0573 | 0272 | 0098 | 0090 | 0153 | 0033 |
| 2 | 0325 | 0181 | 0000 | 0557 | 0507 | 0461 | 0283 | 0216 | 0104 | 0532 | 0127 | 0084 | 0000 | 0187 | 0005 |
| 3 | 0553 | 0182 | 0202 | 0428 | 0314 | 0368 | 0218 | 0291 | 0172 | 0428 | 0007 | 0351 | 0079 | 0131 | 0016 |
| 4 | 0433 | 0225 | 0771 | 0557 | 0417 | 0421 | 0189 | 0175 | 0288 | 0466 | 0000 | 0389 | 0172 | 0174 | 0084 |
| 5 | 0521 | 0123 | 0039 | 0759 | 0363 | 0329 | 0106 | 0000 | 0280 | 0372 | 0158 | 0356 | 0053 | 0139 | 0007 |
| 6 | 0465 | 0129 | 0428 | 0370 | 0347 | 0400 | 0235 | 0109 | 0139 | 0302 | 0392 | 0351 | 0136 | 0099 | 0029 |
| 7 | 0526 | 0221 | 0622 | 0365 | 0346 | 0246 | 0196 | 0204 | 0371 | 0207 | 0122 | 0242 | 0115 | 0121 | 0029 |
| 8 | 0322 | 0048 | 1014 | 0000 | 0052 | 0531 | 0171 | 0162 | 0160 | 0566 | 0371 | 0356 | 0238 | 0012 | 0036 |
| 9 | 0297 | 0195 | 0283 | 0032 | 0284 | 0483 | 0364 | 0351 | 0351 | 0435 | 0269 | 0449 | 0113 | 0144 | 0040 |
| 10 | 0375 | 0238 | 0734 | 0279 | 0291 | 0277 | 0416 | 0389 | 0025 | 0000 | 0293 | 0427 | 0136 | 0112 | 0036 |
| 11 | 0435 | 0113 | 0575 | 0011 | 0420 | 0385 | 0491 | 0368 | 0169 | 0154 | 0441 | 0365 | 0135 | 0140 | 0051 |
| 12 | 0605 | 0235 | 0847 | 0039 | 0000 | 0382 | 0392 | 0648 | 0491 | 0896 | 0287 | 0325 | 0324 | 0158 | 0152 |
| 13 | 0515 | 0111 | 0636 | 0405 | 0456 | 0405 | 0587 | 0244 | 0655 | 0966 | 0357 | 0244 | 0263 | 0291 | 0189 |
| 14 | 0528 | 0178 | 0958 | 0577 | 0307 | 0461 | 0265 | 1086 | 0650 | 0559 | 0448 | 0295 | 0286 | 0390 | 0250 |
| 15 | 0367 | 0140 | 1224 | 0438 | 0069 | 0402 | 0374 | 0430 | 0498 | 0396 | 0260 | 0385 | 0254 | 0201 | 0139 |
| 16 | 0526 | 0230 | 0669 | 0546 | 0234 | 0203 | 0307 | 0494 | 0391 | 0276 | 0329 | 0228 | 0168 | 0195 | 0093 |
| 17 | 0386 | 0395 | 0568 | 0606 | 0032 | 0202 | 0154 | 0356 | 0501 | 0386 | 0182 | 0361 | 0171 | 0141 | 0068 |
| 18 | 0370 | 0242 | 0407 | 0361 | 0115 | 0122 | 0074 | 0202 | 0486 | 0538 | 0386 | 0344 | 0173 | 0059 | 0027 |
| 19 | 0413 | 0329 | 0874 | 0501 | 0350 | 0000 | 0161 | 0270 | 0385 | 0645 | 0503 | 0498 | 0335 | 0111 | 0134 |
| 20 | 0552 | 0312 | 0694 | 0426 | 0370 | 0092 | 0000 | 0108 | 0007 | 0335 | 0407 | 0115 | 0194 | 0000 | 0008 |
| 21 | 0396 | 0315 | 0739 | 0363 | 0301 | 0301 | 0070 | 0116 | 0000 | 0531 | 0647 | 0295 | 0279 | 0025 | 0063 |
| 22 | 0463 | 0372 | 0148 | 0295 | 0367 | 0400 | 0154 | 0105 | 0020 | 0461 | 0279 | 0253 | 0121 | 0056 | 0000 |
| 23 | 0594 | 0287 | 0784 | 0496 | 0420 | 0347 | 0155 | 0196 | 0041 | 0255 | 0318 | 0000 | 0165 | 0109 | 0048 |
| 24 | 0468 | 0000 | 0609 | 0346 | 0332 | 0279 | 0326 | 0217 | 0211 | 0428 | 0472 | 0350 | 0180 | 0118 | 0060 |

Table XXXI. has been formed in the same manner as Table XI. The numbers in the first column are $\frac{24}{25}$ths of the moon's hour-angles from the meridian.

*Diurnal Variation of the Horizontal Component with reference to the Moon's Hour-Angle.*—In this case, as in that for the magnetic declination, the means for the lunations in winter give a somewhat different law from those for the lunations in summer. The following are the means at nearly two-hourly intervals for the summer and winter groups, and for the whole twelve lunations:—

| Groups, | | $0^h\ 0^m$ | $2^h\ 25^m$ | $4^h\ 20^m$ | $6^h\ 15^m$ | $8^h\ 10^m$ | $10^h\ 5^m$ | $12^h\ 0^m$ | $13^h\ 55^m$ | $15^h\ 50^m$ | $17^h\ 45^m$ | $19^h\ 40^m$ | $21^h\ 35^m$ |
|---|---|---|---|---|---|---|---|---|---|---|---|---|---|
| Winter,... | 0·000 | 066 | 000 | 073 | 086 | 136 | 096 | 254 | 231 | 131 | 215 | 197 | 104 |
| Summer, | 0·000 | 155 | 147 | 144 | 098 | 066 | 114 | 212 | 283 | 156 | 073 | 000 | 070 |
| Year 1844, | 0·000 | 037 | 000 | 035 | 019 | 028 | 033 | 160 | 184 | 070 | 070 | 025 | 012 |

In the winter group, for which the moon is in opposition north of the equator—

The maximum occurs about 2 hours after the moon's inferior transit.
The minimum ..... 2 hours ..... superior transit.

If there are secondary maxima or minima, they are not well marked in the means for 1844.

In the summer group, for which the moon is in opposition south of the equator, the variation is distinctly double;

The principal maximum occurs about 2 hours after the moon's inferior transit.
The principal minimum ..... $4\frac{1}{2}$ ..... before .....superior transit.
A secondary maximum ..... 2 ..... after .....
A secondary minimum ..... 8 ..... after .....

In the group for the year,

The maximum occurs about $1\frac{1}{2}$ hours after the moon's inferior transit,
The minimum ..... 2 ..... after ..... superior transit.

There are appearances of minima before and after the latter epoch, but they are not distinct. The variation for the year, therefore, has the same epochs as that for the winter group.

As the range of this variation is so small, it was supposed that the large disturbances might have considerable effect in destroying its regularity. In order to test this, all those observations which differed more than 25 scale divisions (0·0035) from the monthly means for the corresponding hours, were rejected in the summations, quantities interpolated from the preceding and succeeding observations having been substituted. The following are the resulting variations at nearly two hourly intervals :—

| | | $0^h\ 0^m$ | $2^h\ 25^m$ | $4^h\ 20^m$ | $6^h\ 15^m$ | $8^h\ 10^m$ | $10^h\ 5^m$ | $12^h\ 0^m$ | $13^h\ 55^m$ | $15^h\ 50^m$ | $17^h\ 45^m$ | $19^h\ 40^m$ | $21^h\ 35^m$ |
|---|---|---|---|---|---|---|---|---|---|---|---|---|---|
| Year 1844, | 0·000 | 047 | 053 | 101 | 055 | 076 | 074 | 164 | 187 | 059 | 078 | 000 | 071 |

These give the same time of maximum, but the minimum occurs four hours before the superior transit, instead of after it; a secondary minimum also occurs about seven hours after the superior transit,—a secondary maximum occurring between the two latter epochs. The elimination of those observations affected by large irregularities renders the variation for the year analogous, in its singular points, to that for the summer months given previously; it is quite possible, therefore, that the differences between the law of variation for the summer and winter groups may be due chiefly to intermittent disturbances.

## INTERMITTENT DISTURBANCES.

*Effect of Intermittent Disturbances on the Yearly Mean of the Horizontal Component.*—Performing discussions for the horizontal component of magnetic force similar to those already made for the magnetic declination (p. 343), we obtain the following results :—

| | |
|---|---|
| Mean of the horizontal component for 1844, as deduced from 120-day series of hourly observations, greater than that deduced from the whole series by ..... | 0·000189 |
| Mean of the horizontal component for 1844, as deduced from 60-day series of hourly observations, greater than that deduced from the whole series by ..... | 0·000251 |

Hence the effect of disturbances in 1844, was to diminish the mean value of the horizontal component of force; the mean for the 60-day series of observations being greatest, 0·000062 greater than that of the 120-day series, and 0·000251 greater than that for the complete series.

*Effect of Disturbances on the Monthly Means of the Horizontal Component.*—The corrections of the means from the 10 days and 5 days selected in each month to the means from the complete series, are, in scale divisions, as follow :—

| | Jan. | Feb. | March. | April. | May. | June. | July. | Aug. | Sept. | Oct. | Nov. | Dec. |
|---|---|---|---|---|---|---|---|---|---|---|---|---|
| 10 days, | −0·78 | −2·47 | −2·85 | −2·25 | −0·21 | +0·13 | −0·15 | −0·77 | −0·44 | −3·62 | −1·17 | −1·67 |
| 5 days, | −1·06 | −2·93 | −3·75 | −2·93 | −0·96 | +0·82 | +0·01 | −0·97 | −1·11 | −4·03 | −2·44 | −2·11 |

The corrections for both series give the same result; but it is most marked for the 5-day series, that least affected by disturbances. This result may be stated as follows:—The effect of disturbances is to diminish the monthly mean of the horizontal component in all cases, with the exception of that for June, and, perhaps, July; the diminution is greatest near the equinoxes, and least at the solstices; at the summer solstice the effect is to increase the monthly mean. When we compare this result with that already given for the annual period (see p. 356), we might be induced to conclude that the latter is due to disturbances: this, however, is not the case. If we apply the above corrections reduced to parts of force, to the monthly means,

p. 356, for which the secular change has been eliminated, we obtain the following quantities, which are the monthly means of the 10 days and 5 days, with the secular change eliminated:—

| | Jan. | Feb. | March. | April. | May. | June. | July. | Aug. | Sept. | Oct. | Nov. | Dec. |
|---|---|---|---|---|---|---|---|---|---|---|---|---|
| 10 days, 0·00 | 2772 | 2969 | 2616 | 2625 | 2820 | 3297 | 3273 | 2930 | 2646 | 2853 | 2684 | 3004 |
| 5 days, 0·00 | 2811 | 3033 | 2742 | 2720 | 2925 | 3200 | 3251 | 2958 | 2739 | 2910 | 2862 | 3065 |

The months with the highest mean values are June and July, December and February; those with the lowest are March and April, September and November. We have therefore the same law of annual period as from the complete series of observations, namely, maxima near the solstices, and minima near the equinoxes. An examination of the days which have been selected as most free from disturbances has shewn, that these days are generally near the time of new moon; at which time, according to the previous discussion, p. 358, the horizontal component has its greatest value, and in accordance with a discussion which follows, p. 369, at which time magnetic disturbances are a minimum. Though no elimination of disturbances will destroy the annual variation of the horizontal component, it is evident, for 1844 at least, that disturbances increase its amount, and it will be a question to be decided by a more extensive induction, whether the annual variation be not due to a regular action of the cause producing the disturbances.

*Effect of Disturbances on the Hourly Means of the Horizontal Component.*—The following Tables contain the differences for each month between the hourly means obtained from the whole hourly observations, and those from the selected series of 10 days and 5 days.

TABLE XXXII.—Differences between the Hourly Means of Bifilar Scale Readings for the whole Series in each Month, and those for the selected Ten Days; or Table XXVI. *minus* Table XXVIII.

| Mak. M. T. | Jan. | Feb. | March. | April. | May. | June. | July. | Aug. | Sept. | Oct. | Nov. | Dec. | Year. |
|---|---|---|---|---|---|---|---|---|---|---|---|---|---|
| h. | Sc. Div. | Sc. Div. | Sc. Div. | Sc. Div. | Sc. Div. | Sc. Div. | Sc. Div. | Sc. Div. | Sc. Div. | Sc. Div. | Sc. Div. | Sc. Div. | Sc. Div. |
| 12 | −0·11 | +0·48 | −0·22 | −1·65 | −2·23 | +0·30 | +0·58 | +0·16 | −1·12 | +0·03 | −1·03 | −1·43 | −0·52 |
| 13 | +0·71 | −1·21 | −5·73 | −0·07 | −1·32 | −0·09 | +0·06 | −1·99 | −0·53 | +0·29 | −0·01 | +0·37 | −0·80 |
| 14 | +0·05 | −1·10 | −3·86 | −1·32 | −1·78 | −0·13 | −0·46 | −1·14 | −1·96 | −0·20 | −1·68 | −0·73 | −1·19 |
| 15 | −0·24 | −0·54 | −1·54 | −2·99 | −1·23 | −0·17 | −0·57 | −1·67 | +0·42 | +1·69 | +0·45 | −1·11 | −0·62 |
| 16 | −0·07 | −0·70 | −0·45 | −0·69 | −1·75 | −1·62 | −0·32 | −0·67 | +0·94 | +0·59 | −0·11 | −0·06 | −0·41 |
| 17 | +0·92 | +2·05 | −2·92 | −0·16 | +0·15 | −1·28 | −1·26 | −1·68 | +2·04 | −0·33 | +0·13 | −0·13 | −0·21 |
| 18 | +1·06 | +1·33 | +0·97 | −0·31 | +0·67 | −1·79 | −0·08 | −0·91 | +2·61 | −0·34 | +1·07 | +0·12 | +0·36 |
| 19 | +0·77 | +0·64 | +0·60 | −2·14 | +0·06 | −1·44 | −0·46 | −1·26 | +0·08 | −0·55 | +1·12 | +1·06 | −0·13 |
| 20 | +0·57 | +1·04 | −0·73 | −3·76 | −0·91 | −1·24 | −0·53 | −1·80 | +3·70 | −1·37 | +0·91 | +0·99 | −0·27 |
| 21 | +0·80 | +0·20 | +0·19 | −3·36 | −0·29 | −1·34 | −1·41 | −1·02 | +2·11 | −1·81 | +0·75 | +0·66 | −0·38 |
| 22 | −0·40 | +0·08 | +0·23 | −0·39 | −0·71 | −0·81 | −0·86 | −0·76 | −0·06 | −1·47 | −0·40 | +0·59 | −0·40 |
| 23 | +0·49 | −1·38 | +1·17 | −0·24 | −0·17 | −0·88 | +0·59 | −0·29 | −1·10 | −0·09 | −0·38 | +1·13 | −0·10 |
| 0 | −0·83 | −0·89 | +1·61 | +2·84 | +0·63 | +1·38 | +1·74 | −0·38 | +0·32 | +2·08 | +2·04 | +1·37 | +0·99 |
| 1 | −1·66 | +0·89 | +2·27 | +3·14 | −0·78 | +0·77 | +0·44 | +1·03 | −0·82 | +2·18 | +0·72 | +0·19 | +0·70 |
| 2 | −0·30 | +1·31 | +1·27 | +4·10 | +1·70 | +1·50 | −0·19 | +2·05 | +0·22 | +0·78 | +1·13 | −0·12 | +1·12 |
| 3 | −0·87 | +1·33 | +2·72 | +1·07 | −0·01 | +1·70 | −0·47 | +3·12 | −0·73 | +2·66 | +0·16 | +1·03 | +0·97 |
| 4 | +1·12 | +2·36 | +3·65 | +3·78 | +4·07 | +0·90 | +1·33 | +3·83 | +0·83 | +2·02 | −2·09 | −0·75 | +1·76 |
| 5 | −0·09 | +0·17 | +5·06 | +4·50 | +2·29 | +0·47 | +0·04 | +4·11 | +2·33 | +1·81 | +1·52 | −1·63 | +1·72 |
| 6 | −0·87 | −1·08 | +0·37 | +3·41 | +2·60 | +1·07 | +1·57 | +3·78 | −0·88 | −0·95 | +1·12 | −0·32 | +0·82 |
| 7 | −1·77 | −0·77 | +3·23 | −1·00 | +1·72 | +0·96 | +1·31 | +2·36 | −1·56 | −1·46 | −0·75 | −0·78 | +0·13 |
| 8 | +0·83 | +0·16 | +1·69 | −0·52 | +1·22 | +0·86 | −0·10 | +0·07 | −2·20 | −0·71 | +0·36 | +1·65 | +0·27 |
| 9 | +0·10 | +0·42 | −3·02 | −1·81 | −0·22 | +0·75 | −0·67 | −2·19 | −1·37 | −2·91 | −1·80 | +0·05 | −1·06 |
| 10 | 0·00 | −1·93 | −5·58 | −0·74 | −0·75 | +0·71 | +0·06 | −0·91 | −1·33 | −0·34 | −2·02 | −1·17 | −1·16 |
| 11 | −0·26 | −2·90 | −1·13 | −1·79 | −3·09 | −0·49 | −0·40 | −3·72 | −1·95 | −1·53 | −1·41 | −0·90 | −1·63 |

TABLE XXXIII.—Differences between the Hourly Means of Bifilar Scale Readings for the whole Series in each Month, and those for the selected Five Days; or Table XXVI. *minus* Table XXIX.

| Mak. M. T. | Jan. | Feb. | March. | April. | May. | June. | July. | Aug. | Sept. | Oct. | Nov. | Dec. | Year. |
|---|---|---|---|---|---|---|---|---|---|---|---|---|---|
| h. | Sc. Div. | Sc. Div. | Sc. Div. | Sc. Div. | Sc. Div. | Sc. Div. | Sc. Div. | Sc. Div. | Sc. Div. | Sc. Div. | Sc. Div. | Sc. Div. | Sc. Div. |
| 12 | −0·03 | +0·66 | −3·08 | −3·07 | −1·84 | −0·67 | −0·47 | −1·11 | −1·93 | +0·12 | −0·68 | −1·21 | −1·10 |
| 13 | −0·17 | −0·80 | −7·65 | −0·77 | −1·53 | −0·18 | −0·91 | −2·47 | −0·87 | −1·17 | +0·49 | −0·05 | −1·34 |
| 14 | −0·33 | −0·15 | −5·94 | −1·78 | −1·54 | −0·71 | −1·42 | −1·65 | −2·18 | +0·20 | −2·38 | −1·63 | −1·62 |
| 15 | −0·85 | −0·01 | −2·97 | −3·69 | −0·93 | −0·65 | −1·52 | −1·43 | −0·08 | +1·37 | +0·81 | −1·45 | −0·95 |
| 16 | +0·51 | +0·32 | −1·90 | −0·65 | −1·18 | −1·71 | −1·18 | −1·20 | +0·65 | +0·61 | +0·12 | −0·13 | −0·48 |
| 17 | +1·42 | +2·49 | −3·62 | −0·62 | +0·88 | −2·34 | −1·62 | −2·21 | +2·69 | +0·18 | +0·23 | +0·09 | −0·20 |
| 18 | +1·68 | +1·75 | +0·40 | −1·11 | +1·78 | −3·07 | −0·43 | −0·87 | +2·80 | +0·63 | +0·73 | +1·18 | +0·45 |
| 19 | +1·60 | +1·33 | −0·04 | −2·34 | +0·33 | −2·93 | −1·29 | −0·79 | +1·09 | +0·21 | −0·01 | +1·59 | −0·11 |
| 20 | +0·68 | +1·56 | −1·24 | −3·96 | −0·46 | −1·76 | −2·32 | −0·96 | +4·65 | −1·08 | +1·25 | +1·74 | −0·16 |
| 21 | +1·37 | −0·29 | +0·40 | −3·92 | −0·81 | −1·32 | −2·80 | −0·43 | +1·66 | −1·20 | +1·25 | +1·75 | −0·36 |
| 22 | −0·60 | −0·43 | +1·36 | −0·46 | −1·83 | −0·23 | −1·21 | −0·73 | −1·37 | −1·39 | +0·13 | +0·88 | −0·49 |
| 23 | −0·04 | −2·89 | +2·38 | −0·35 | +0·15 | +1·26 | +1·89 | −0·77 | −0·84 | +1·43 | +0·66 | +1·75 | +0·38 |
| 0 | −1·14 | −1·46 | +2·97 | +3·09 | +1·40 | +3·79 | +2·22 | −1·50 | −2·90 | +2·70 | +2·14 | +2·29 | +1·13 |
| 1 | −1·28 | −0·39 | +4·05 | +4·30 | −0·64 | +1·86 | +0·94 | +0·60 | −1·01 | +2·07 | +0·73 | −0·39 | +0·91 |
| 2 | +0·21 | +1·56 | +3·59 | +4·26 | −0·38 | +1·69 | +2·15 | +2·02 | −1·23 | +1·09 | +1·28 | −0·89 | +1·28 |
| 3 | −0·47 | +1·70 | +5·71 | +2·11 | −0·62 | +1·70 | −0·05 | +3·64 | −1·02 | +2·39 | +0·16 | +1·52 | +1·40 |
| 4 | +0·59 | +2·29 | +5·51 | +4·85 | +3·42 | −0·03 | +3·09 | +5·32 | +2·53 | +1·53 | −1·87 | −1·56 | +2·14 |
| 5 | −0·29 | +0·55 | +4·74 | +4·39 | +3·21 | +0·48 | −0·01 | +3·74 | +2·59 | +1·01 | +1·83 | −2·13 | +1·68 |
| 6 | −0·73 | −0·45 | +0·37 | +3·84 | +2·00 | +0·49 | +2·47 | +3·34 | −0·39 | −1·36 | +1·80 | +0·07 | +0·96 |
| 7 | −2·57 | −1·08 | +2·84 | −0·20 | +2·48 | +1·39 | +1·91 | +2·43 | −0·42 | −1·45 | −0·51 | −1·33 | +0·29 |
| 8 | −0·41 | −0·39 | +1·51 | −0·59 | +2·01 | +0·47 | +0·36 | +0·03 | −1·08 | −0·97 | +0·05 | +0·82 | +0·15 |
| 9 | +0·54 | −1·02 | −3·73 | −1·95 | −0·75 | +1·65 | −0·44 | −2·24 | −0·55 | −4·34 | −3·13 | −0·38 | −1·36 |
| 10 | +0·42 | −2·17 | −4·53 | +0·10 | −0·79 | +1·03 | +0·61 | −0·58 | −0·33 | −1·85 | −2·53 | −1·17 | −0·98 |
| 11 | −0·21 | −2·75 | −1·16 | −1·62 | −4·40 | −0·26 | −0·02 | −2·01 | −2·54 | −0·69 | −2·58 | −1·39 | −1·63 |

Considering, first, the differences of the hourly means for the year, as obtained from a comparison of the whole observations with the 60-day series of observations, we obtain the following results:—

The mean effect of disturbances upon the hourly mean of the horizontal component is a positive maximum at $4^h\ 10^m$ P.M.; it is a negative maximum about $12^h\ 30^m$, or near midnight; there is the appearance of a secondary positive maximum at $6^h\ 10^m$ A.M., and minimum at $10^h\ 10^m$ A.M.; the effect is zero about $5^h$, $7^h$, and $10^h\ 0^m$ A.M., and at $8^h\ 20^m$ P.M. The comparison of the whole series with the 120-day series, gives almost exactly the same result. It will be perceived that the epochs for the effect of disturbance on the horizontal component, are considerably different from those for the magnetic declination: the effect on the latter is zero when the effect on the former is a maximum, and *vice versa*. The maximum effect of disturbance in diminishing the horizontal component, occurs about two or three hours after the corresponding epoch for the magnetic declination, the time for the latter being about $10^h$ P.M.

The greatest effects of disturbance in increasing and diminishing the hourly mean of the horizontal component, as deduced from the comparison of the whole series with the 60-day series of observations, are as follow, the whole horizontal component being unity:—

Maximum effect in increasing the horizontal component ($4^h\ 10^m$ P.M.) .....=0·000300
..... diminishing ..... ($11^h\ 10^m$ P.M. and $2^h\ 10^m$ A.M.)=0·000228

The effect of disturbances on the hourly means of the horizontal component is therefore less in comparison with the diurnal range, than in the case of the magnetic declination; in the latter case the maximum effect is between $\frac{1}{4}$ and $\frac{1}{5}$ of the range of the mean diurnal variation, whereas in the case of the horizontal component it is only between $\frac{1}{7}$ and $\frac{1}{8}$ of the diurnal range.

An examination of the differences for each month, will shew that the law is somewhat variable; the secondary maximum about $6^h$ A.M., and minimum about $10^h$ A.M, are most distinct in some months, especially in the winter.

The following are the differences of the hourly means for the 120-day series and for the 60-day series, or means for 120 days *minus* means for 60 days:—

| 12h | 1h A.M. | 2h | 3h | 4h | 5h | 6h | 7h | 8h | 9h | 10h | 11h |
|---|---|---|---|---|---|---|---|---|---|---|---|
| −0·58 | −0·54 | −0·43 | −0·33 | −0·07 | +0·01 | +0·09 | +0·02 | +0·11 | +0·02 | −0·09 | +0·48 |
| 0h | 1h P.M. | 2h | 3h | 4h | 5h | 6h | 7h | 8h | 9h | 10h | 11h |
| +0·14 | +0·21 | +0·16 | +0·43 | +0·38 | −0·04 | +0·14 | +0·16 | −0·12 | −0·30 | +0·18 | 0·00 |

These differences follow nearly the same law as those already considered. The maximum of the positive effect occurs about 3h P.M., and of the negative effect immediately after midnight, while there is also a secondary positive maximum about 6h A.M., and minimum about 10h A.M.; whence, as in the analogous discussion for the magnetic declination, we may conclude, that the smallest disturbances obey the same diurnal law as the larger disturbances.

*Differences of the Individual Observations from the Monthly Means for the corresponding hours.*—Adopting the process already indicated, p. 346, for the magnetic declination, we obtain the following Table:—

TABLE XXXIV.—Mean Difference of a Single Observation of the Bifilar Magnetometer from the Monthly Mean, at the corresponding hour, for each Civil Day and Week in 1844.

| Civil Day. | Jan. | Feb. | March. | April. | May. | June. | July. | Aug. | Sept. | Oct. | Nov. | Dec. |
|---|---|---|---|---|---|---|---|---|---|---|---|---|
| | Sc. Div. | Sc. Div. | Sc. Div. | Sc. Div. | Sc. Div. | Sc. Div. | Sc. Div. | Sc. Div. | Sc. Div. | Sc. Div. | Sc. Div. | Sc. Div. |
| 1 | 2·33 | 5·16 | 3·09 | 7·80 | 7·28 | 2·88 | 3·27 | 9·40 | [4·22] | 19·98 | 3·72 | [ 3·32] |
| 2 | 3·82 | 5·19 | 5·85 | 6·29 | 3·38 | [2·92] | 1·91 | 9·57 | 4·21 | 4·14 | 3·96 | 2·19 |
| 3 | 1·74 | 5·86 | [5·75] | 7·17 | 5·55 | 2·45 | 1·83 | 6·35 | 2·77 | 2·69 | [3·50] | 2·08 |
| 4 | 3·34 | [5·69] | 5·43 | 5·35 | 5·96 | 2·22 | 2·58 | [5·66] | 3·65 | 2·45 | 3·78 | 4·34 |
| 5 | 3·85 | 5·83 | 6·28 | 3·23 | [4·50] | 2·08 | 2·22 | 2·86 | 1·89 | 2·67 | 1·33 | 2·63 |
| 6 | 4·53 | 7·46 | 8·80 | 3·97 | 3·79 | 1·98 | 2·40 | 2·34 | 2·17 | [3·08] | 3·08 | 2·63 |
| 7 | [3·40] | 4·65 | 8·46 | [3·80] | 2·60 | 2·30 | [3·56] | 3·46 | 5·30 | 3·12 | 1·94 | 2·01 |
| 8 | 1·77 | 4·57 | 6·91 | 2·51 | 5·70 | 3·00 | 5·50 | 3·15 | [3·26] | 4·00 | 2·67 | [2·80] |
| 9 | 3·93 | 2·74 | 3·90 | 3·95 | 4·25 | [2·28] | 4·95 | 9·98 | 3·47 | 3·55 | 3·07 | 3·02 |
| 10 | 2·98 | 2·87 | [4·70] | 3·75 | 2·69 | 1·92 | 3·70 | 5·30 | 2·92 | 3·53 | [3·20] | 2·67 |
| 11 | 2·00 | [2·80] | 2·24 | 3·14 | 2·47 | 2·60 | 2·30 | [4·84] | 3·80 | 3·96 | 6·16 | 3·84 |
| 12 | 2·50 | 1·85 | 3·33 | 4·33 | [3·48] | 1·89 | 2·36 | 4·09 | 3·57 | 3·27 | 3·37 | 3·55 |
| 13 | 1·32 | 1·85 | 3·34 | 3·75 | 2·26 | 3·59 | 4·80 | 3·59 | 3·57 | [3·86] | 1·95 | 2·60 |
| 14 | [1·95] | 2·93 | 4·40 | [7·00] | 4·45 | 2·71 | [3·08] | 2·92 | 4·58 | 5·43 | 3·92 | 7·55 |
| 15 | 2·02 | 3·74 | 4·64 | 5·92 | 4·77 | 2·38 | 3·75 | 2·46 | [3·14] | 3·14 | 3·56 | [3·68] |
| 16 | 1·87 | 1·84 | 3·92 | 2·30 | 1·62 | [3·14] | 2·33 | 3·07 | 2·45 | 3·83 | 12·12 | 4·22 |
| 17 | 2·02 | 4·90 | [4·42] | 22·56 | 2·65 | 4·28 | 2·96 | 3·68 | 2·90 | 3·33 | [5·42] | 2·02 |
| 18 | 1·69 | [3·07] | 3·92 | 5·99 | 2·95 | 3·92 | 3·50 | [3·27] | 1·77 | 4·79 | 4·81 | 2·17 |
| 19 | 1·35 | 2·83 | 6·02 | 3·25 | [4·05] | 1·95 | 3·55 | 2·65 | 4·14 | 6·01 | 6·00 | 4·30 |
| 20 | 1·47 | 2·75 | 3·65 | 2·85 | 5·29 | 2·62 | 2·00 | 3·95 | 7·02 | [6·02] | 2·09 | 5·97 |
| 21 | [2·39] | 2·40 | 3·37 | [4·59] | 6·09 | 2·97 | [2·88] | 3·84 | 4·77 | 15·55 | 2·14 | 5·71 |
| 22 | 2·99 | 2·76 | 4·42 | 4·18 | 5·67 | 2·55 | 2·82 | 6·44 | [4·65] | 2·85 | 9·27 | [3·50] |
| 23 | 4·30 | 1·97 | 5·03 | 5·90 | 6·59 | [2·73] | 2·44 | 6·67 | 3·04 | 3·60 | 9·60 | 1·31 |
| 24 | 2·52 | 4·60 | [4·85] | 5·36 | 3·20 | 2·17 | 2·98 | 5·74 | 5·04 | 1·71 | [5·11] | 1·41 |
| 25 | 3·01 | [3·70] | 5·01 | 8·10 | 3·50 | 2·64 | 7·39 | [4·51] | 3·86 | 6·75 | 2·60 | 2·34 |
| 26 | 1·42 | 3·22 | 5·39 | 5·93 | [3·72] | 3·45 | 3·74 | 3·03 | 11·19 | 7·71 | 2·34 | 3·30 |
| 27 | 2·75 | 2·65 | 5·86 | 7·72 | 3·26 | 2·33 | 4·87 | 2·71 | 6·80 | [4·32] | 4·74 | 3·82 |
| 28 | [2·17] | 7·02 | 4·79 | [6·10] | 2·99 | 4·81 | [4·40] | 2·50 | 3·09 | 3·86 | 5·08 | 2·72 |
| 29 | 2·01 | 5·02 | 11·90 | 4·42 | 2·81 | 5·75 | 2·87 | 2·96 | [8·66] | 2·97 | 3·18 | [5·64] |
| 30 | 1·82 | | 22·84 | 3·13 | 2·63 | [3·32] | 2·04 | 6·11 | 6·75 | 2·95 | 3·09 | 11·72 |
| 31 | 2·05 | | [10·13] | | 5·26 | | 5·47 | 5·65 | | 5·15 | | 6·63 |

*Annual Variation of the mean difference for the Horizontal Component.*—The following are the average differences, for each month, of an observation from the monthly mean at the corresponding hour in parts of the horizontal component:—

| | Jan. | Feb. | March. | April. | May. | June. | July. | Aug. | Sept. | Oct. | Nov. | Dec. |
|---|---|---|---|---|---|---|---|---|---|---|---|---|
| 0·000 | 350 | 533 | 823 | 770 | 568 | 400 | 469 | 645 | 587 | 689 | 591 | 521 |

These quantities give the same annual law as has already been obtained for the magnetic declination. The maximum disturbance of the horizontal component occurs near the equinoxes, and the minimum disturbance occurs near the solstices. While the effect of disturbances on the hourly means is less for the horizontal component than for the magnetic declination, the individual observations of the former differ more from the corresponding monthly means than for the latter, the diurnal range in each case being the standard of comparison.

TABLE XXXV.—Mean Difference of a Single Observation of the Bifilar Magnetometer from the Monthly Mean at the corresponding hour, with reference to the Moon's Age, Declination, and Distance from the Earth, for 1844.

| Moon's Age. | Mean Difference. | Moon's Age. | Mean Difference. | After Moon farthest North. | Mean Difference. | After Moon farthest North. | Mean Difference. | Before and after Perigee. | Mean Difference. | Before and after Apogee. | Mean Difference. |
|---|---|---|---|---|---|---|---|---|---|---|---|
| Day. | Sc. Div. | Day. | Sc. Div. | Day. | Sc. Div. | Day. | Sc. Div. | Day. | Sc. Div. | Day. | Sc. Div. |
| 15 | 4·38 | 0 | 4·76 | 0 | 3·53 | 14 | 3·53 | 7 | 4·27 | 7 | 4·60 |
| 16 | 4·56 | 1 | 3·67 | 1 | 4·25 | 15 | 3·86 | 6 | 3·90 | 6 | 3·77 |
| 17 | 5·59 | 2 | 3·47 | 2 | 4·66 | 16 | 3·61 | 5 | 5·59 | 5 | 4·40 |
| 18 | 5·04 | 3 | 3·34 | 3 | 4·11 | 17 | 4·00 | 4 | 4·11 | 4 | 4·55 |
| 19 | 5·17 | 4 | 3·64 | 4 | 4·82 | 18 | 3·87 | 3 | 3·95 | 3 | 4·20 |
| 20 | 3·67 | 5 | 3·74 | 5 | 5·14 | 19 | 4·53 | 2 | 3·63 | 2 | 6·12 |
| 21 | 3·40 | 6 | 4·60 | 6 | 4·37 | 20 | 4·23 | 1 | 4·50 | 1 | 3·82 |
| 22 | 3·05 | 7 | 3·89 | 7 | 4·29 | 21 | 4·61 | P | 4·24 | A | 4·50 |
| 23 | 2·02 | 8 | 4·49 | 8 | 3·94 | 22 | 3·38 | 1 | 4·21 | 1 | 2·85 |
| 24 | 3·12 | 9 | 4·30 | 9 | 3·92 | 23 | 5·84 | 2 | 3·59 | 2 | 3·81 |
| 25 | 3·44 | 10 | 5·66 | 10 | 3·72 | 24 | 5·06 | 3 | 3·56 | 3 | 3·94 |
| 26 | 3·20 | 11 | 4·37 | 11 | 3·02 | 25 | 3·92 | 4 | 3·00 | 4 | 4·25 |
| 27 | 3·72 | 12 | 5·96 | 12 | 3·90 | 26 | 4·47 | 5 | 4·30 | 5 | 4·16 |
| 28 | 3·47 | 13 | 4·87 | 13 | 3·73 | 27 | 3·65 | 6 | 4·25 | 6 | 4·66 |
| 29 | 3·12 | 14 | 5·36 | | | | | 7 | 4·29 | 7 | 4·88 |

This Table has been formed from Table XXXIV., in the manner already described, Table II.

*Variation of the Mean Differences with respect to the Moon's Age.*—From the first portion of Table XXXV. it appears that the average difference is a maximum about opposition, and a minimum near conjunction. The following are the means of groups :—

| | Sc. Div. | | Sc. Div. |
|---|---|---|---|
| 14 days to 16 days, Full Moon, | 4·77 | 29 days to 1 day, New Moon, | 3·85 |
| 17 ..... 20 ... | 4·87 | 2 ..... 5 days, | 3·55 |
| 21 ..... 24 ... | 3·15 | 6 ..... 9 ... | 4·32 |
| 25 ..... 28 ... | 3·46 | 10 ..... 13 ... | 5·22 |

These means indicate in a general manner the result stated above. There is, however, a secondary maximum apparent at the time of conjunction, minima occurring before and after that epoch.

The average difference for the 11 days (10 – 20), including full moon, = 4·97 Sc. Div.
..... 11 ... (25 – 5), ..... new moon, = 3·60 .....

*Variations of the Mean Differences with reference to the Moon's Declination.*—A general examination of the second portion of Table XXXV. shews that the average difference of a single observation from its corresponding monthly mean is a maximum twice, namely, when the moon is about two days north of the equator, and that it is a minimum twice, namely, when the moon is farthest north and farthest south. This will be seen also in the following means of groups :—

| | Sc. Div. | | Sc. Div. |
|---|---|---|---|
| 27 days to 1 day, Moon farthest North, | 3·81 | 13 days to 15 days, Moon farthest South, | 3·71 |
| 2 ..... 5 days, | 4·68 | 16 ..... 19 ... | 4·00 |
| 6 ..... 8 ... | 4·20 | 20 ..... 22 ... | 4·07 |
| 9 ..... 12 ... | 3·64 | 23 ..... 26 ... | 4·82 |

From these the principal minimum occurs when the moon is farthest south; the difference between the minima is small, and is perhaps accidental, as the result for the magnetic declination placed the principal minimum when the moon was farthest north. (See p. 347.)

TABLE XXXVI.—Mean Difference of a Single Observation of the Bifilar Magnetometer from the Monthly Mean at the corresponding hour, for each Hour in each Month of 1844.

| Mak. M. T. | Jan. | Feb. | March. | April. | May. | June. | July. | Aug. | Sept. | Oct. | Nov. | Dec. |
|---|---|---|---|---|---|---|---|---|---|---|---|---|
| h. | Sc. Div. | Sc. Div. | Sc. Div. | Sc. Div. | Sc. Div. | Sc. Div. | Sc. Div. | Sc. Div. | Sc. Div. | Sc. Div. | Sc. Div. | Sc. Div. |
| 12 | 2·81 | 3·17 | 8·12 | 5·95 | 4·44 | 2·49 | 2·63 | 3·80 | 4·92 | 4·01 | 4·43 | 4·48 |
| 13 | 1·86 | 4·45 | 12·89 | 3·67 | 4·14 | 2·13 | 2·67 | 4·95 | 4·26 | 3·85 | 3·32 | 2·68 |
| 14 | 1·86 | 5·00 | 10·96 | 4·19 | 4·41 | 2·03 | 2·07 | 3·93 | 4·69 | 4·71 | 3·93 | 4·67 |
| 15 | 1·81 | 3·72 | 7·33 | 6·28 | 5·00 | 2·36 | 2·64 | 3·66 | 3·58 | 2·92 | 2·65 | 4·80 |
| 16 | 2·06 | 4·28 | 5·42 | 3·70 | 4·84 | 2·42 | 2·91 | 3·16 | 3·62 | 4·03 | 2·79 | 3·45 |
| 17 | 1·83 | 2·47 | 9·59 | 5·64 | 3·05 | 2·78 | 3·13 | 3·89 | 3·98 | 7·32 | 4·83 | 3·34 |
| 18 | 2·06 | 2·18 | 3·37 | 3·78 | 3·23 | 2·99 | 3·03 | 3·69 | 4·70 | 5·73 | 3·89 | 3·23 |
| 19 | 1·79 | 2·85 | 4·24 | 5·39 | 3·09 | 2·94 | 3·56 | 4·44 | 4·50 | 4·73 | 3·11 | 2·92 |
| 20 | 2·03 | 2·19 | 4·63 | 6·97 | 3·56 | 2·19 | 4·44 | 5·53 | 3·90 | 6·23 | 3·88 | 3·08 |
| 21 | 2·31 | 3·36 | 4·68 | 7·80 | 3·78 | 2·36 | 3·38 | 4·88 | 3·93 | 6·88 | 4·55 | 3·42 |
| 22 | 2·89 | 3·89 | 4·86 | 5·94 | 4·76 | 3·09 | 4·01 | 3·84 | 4·93 | 7·54 | 4·32 | 3·82 |
| 23 | 2·03 | 4·51 | 4·45 | 5·69 | 3·41 | 3·90 | 3·59 | 4·00 | 4·39 | 5·41 | 4·60 | 3·42 |
| 0 | 2·53 | 3·88 | 3·21 | 5·92 | 4·06 | 4·34 | 3·81 | 4·65 | 5·72 | 3·59 | 3·60 | 3·18 |
| 1 | 2·85 | 2·89 | 3·80 | 4·17 | 3·99 | 3·61 | 4·75 | 4·38 | 3·82 | 2·65 | 3·42 | 2·81 |
| 2 | 2·21 | 2·40 | 4·00 | 5·10 | 4·16 | 3·60 | 4·33 | 4·65 | 4·35 | 3·66 | 3·12 | 2·89 |
| 3 | 2·84 | 2·64 | 2·92 | 7·94 | 4·53 | 2·87 | 6·04 | 5·41 | 3·55 | 4·60 | 3·56 | 4·25 |
| 4 | 1·84 | 3·14 | 3·08 | 6·49 | 4·07 | 3·71 | 4·67 | 7·58 | 5·10 | 4·27 | 5·02 | 5·22 |
| 5 | 2·50 | 4·18 | 4·65 | 9·32 | 3·75 | 3·23 | 2·95 | 5·65 | 4·13 | 4·19 | 5·74 | 4·27 |
| 6 | 3·20 | 3·84 | 4·43 | 6·84 | 5·00 | 2·92 | 4·05 | 5·83 | 2·86 | 4·23 | 4·81 | 4·23 |
| 7 | 4·13 | 3·68 | 4·89 | 3·99 | 4·41 | 2·26 | 3·18 | 4·84 | 4·75 | 5·68 | 5·46 | 4·52 |
| 8 | 3·76 | 5·10 | 5·27 | 4·07 | 3·70 | 2·06 | 2·37 | 4·06 | 4·58 | 5·83 | 4·13 | 3·21 |
| 9 | 3·33 | 7·06 | 7·48 | 4·42 | 3·48 | 2·96 | 2·06 | 4·72 | 3·78 | 6·53 | 5·42 | 3·75 |
| 10 | 2·81 | 5·43 | 10·10 | 3·75 | 4·03 | 3·04 | 2·10 | 3·73 | 2·93 | 4·62 | 6·32 | 3·58 |
| 11 | 2·56 | 6·49 | 6·69 | 4·88 | 4·61 | 2·31 | 2·11 | 5·33 | 3·57 | 4·98 | 4·27 | 4·09 |

TABLE XXXVII.—Mean Difference of a Single Observation of the Bifilar Magnetometer from the Monthly Mean at the corresponding hour, for each hour in each of the Astronomical Quarters, and in the Year 1844.

| Mak. M. T. | Nov. Dec. Jan. | Feb. March. April. | May. June. July. | Aug. Sept. Oct. | Year. | Mak. M. T. | Nov. Dec. Jan. | Feb. March. April. | May. June. July. | Aug. Sept. Oct. | Year. |
|---|---|---|---|---|---|---|---|---|---|---|---|
| h. | Sc. Div. | Sc. Div. | Sc. Div. | Sc. Div. | Sc. Div. | h. | Sc. Div. | Sc. Div. | Sc. Div. | Sc. Div. | Sc. Div. |
| 12 | 3·91 | 5·75 | 3·19 | 4·24 | 4·27 | 0 | 3·10 | 4·34 | 4·07 | 4·65 | 4·04 |
| 13 | 2·62 | 7·00 | 2·98 | 4·35 | 4·24 | 1 | 3·03 | 3·62 | 4·12 | 3·62 | 3·59 |
| 14 | 3·49 | 6·72 | 2·84 | 4·44 | 4·37 | 2 | 2·74 | 3·83 | 4·03 | 4·22 | 3·71 |
| 15 | 3·09 | 5·78 | 3·33 | 3·39 | 3·90 | 3 | 3·55 | 4·50 | 4·48 | 4·52 | 4·26 |
| 16 | 2·77 | 4·47 | 3·39 | 3·60 | 3·56 | 4 | 4·03 | 4·24 | 4·15 | 5·65 | 4·52 |
| 17 | 3·33 | 5·90 | 2·99 | 5·06 | 4·32 | 5 | 4·17 | 6·05 | 3·31 | 4·66 | 4·55 |
| 18 | 3·06 | 3·11 | 3·08 | 4·71 | 3·49 | 6 | 4·08 | 5·04 | 3·99 | 4·31 | 4·35 |
| 19 | 2·61 | 4·16 | 3·20 | 4·56 | 3·63 | 7 | 4·70 | 4·19 | 3·28 | 5·09 | 4·32 |
| 20 | 3·00 | 4·60 | 3·40 | 5·22 | 4·05 | 8 | 3·70 | 4·81 | 2·71 | 4·82 | 4·01 |
| 21 | 3·43 | 5·28 | 3·17 | 5·23 | 4·28 | 9 | 4·17 | 6·32 | 2·83 | 5·01 | 4·58 |
| 22 | 3·68 | 4·90 | 3·95 | 5·44 | 4·49 | 10 | 4·24 | 6·43 | 3·06 | 3·76 | 4·37 |
| 23 | 3·35 | 4·88 | 3·63 | 4·60 | 4·12 | 11 | 3·64 | 6·02 | 3·01 | 4·63 | 4·32 |

*Diurnal Variation of the Mean Difference.*—The mean difference is a maximum twice and a minimum twice in the day, in the variations for the year. The greatest mean occurs at $9^h\ 10^m$ P.M., but the greatest mean of two consecutive hours is that for $4^h$ and $5^h$ P.M.: the interpolated epochs are as follow: maxima at $4^h\ 40^m$

P.M., and at $10^h\ 10^m$ A.M.; minima at $6^h\ 30^m$ A.M., and at $1^h\ 40^m$ P.M. Although the greatest value occurs about $4^h\ 40^m$ P.M., the mean difference varies little from $4^h\ 10^m$ P.M. till $2^h\ 10^m$ A.M. The following are the approximate epochs of maxima and minima of the diurnal variation in each of the astronomical quarters of the year :—

| | | | | |
|---|---|---|---|---|
| Nov., Dec., Jan., | Min. $6^h$ A.M. | Max. $10^h$ A.M. | Min. $2^h$ P.M. | Max. $+6^h\ 30^m$ P.M. |
| Feb., Mar., April, | $6^h$ A.M. | $10^h$ A.M. | $2^h$ P.M. | $+1^h$ A.M. |
| May, June, July, | $-9^h$ P.M. | $+\ 3^h$ P.M. | | |
| Aug., Sept., Oct., | $-4^h$ A.M. | $+\ 9^h$ A.M. | $1^h$ P.M. | $6^h$ P.M. |
| Year, | $6^h$ A.M. | $10^h$ A.M. | $2^h$ P.M. | $5^h$ P.M. |

Where the principal maximum or minimum is distinctly marked the former is indicated above by + and the latter by −

These epochs indicate that the diurnal law of variation of disturbances was different in different quarters of 1844. The laws of variation in three quarters bear a considerable resemblance to each other, and to that for the year, namely, winter, spring, and autumn; in these quarters the minima occur about 5 A.M. and 2 P.M.; one maximum occurs in all about $10^h$ A.M., the other occurs in two about $6^h$ P.M., but in spring it is about $1^h$ A.M. The variation for summer differs most from the others; there is but one maximum and one minimum. Much of these differences may be due to the fewness of the observations upon which the law depends.

*Annual Variation of the number of Positive Differences.*—The following are the numbers of differences in 100 which were positive :—

| Jan. | Feb. | March. | April. | May. | June. | July. | Aug. | Sept. | Oct. | Nov. | Dec. |
|---|---|---|---|---|---|---|---|---|---|---|---|
| 53·1 | 54·8 | 60·1 | 52·1 | 52·5 | 45·7 | 47·1 | 49·8 | 54·3 | 61·2 | 55·6 | 59·6 |

Whence the horizontal component was *oftenest* in excess of its monthly mean for the corresponding hours about October and March, when there were about 60 positive to 40 negative observations; it was least often in excess about June, when there were about 46 positive to 54 negative observations. The number of positive differences was less than the number of negative differences in the months of June, July, and August, but greater in the other nine months; and in the year there were nearly 54 positive to 46 negative observations.

*Diurnal Variation of the number of Positive Differences.*—The number of positive differences in 100 for each hour of Makerstoun mean time in 1844 are as follow :—

| $12^h$ | $1^h$ A.M. | $2^h$ | $3^h$ | $4^h$ | $5^h$ | $6^h$ | $7^h$ | $8^h$ | $9^h$ | $10^h$ | $11^h$ | $0^h$ | $1^h$ P.M. | $2^h$ | $3^h$ | $4^h$ | $5^h$ | $6^h$ | $7^h$ | $8^h$ | $9^h$ | $10^h$ | $11^h$ |
|---|---|---|---|---|---|---|---|---|---|---|---|---|---|---|---|---|---|---|---|---|---|---|---|
| 54·5 | 56·7 | 58·6 | 58·0 | 57·0 | 58·9 | 51·0 | 53·2 | 51·6 | 55·4 | 59·6 | 56·1 | 52·2 | 50·3 | 51·6 | 48·1 | 47·1 | 49·4 | 48·7 | 54·8 | 49·4 | 57·0 | 55·4 | 57·3 |

The number of positive differences is a maximum about $4^h$ A.M. and $10^h$ A.M.; it is a principal minimum about 4 P.M. and a secondary minimum about $7^h$ A.M. The number of positive differences is greater than the number of negative differences in each hour, excepting those from $3^h$ till $7^h$.

### *Mean Disturbance.*

Making use of the means deduced from the five days least disturbed (Table XXIX.) as approximate normal means, as has been already done for the magnetic declination, pages 349 and 350, we obtain the following results.

*Annual Variation of the Mean Disturbance.*—The following are the mean disturbances for a single observation in parts of the horizontal component in each month of 1844 :—

| | Jan. | Feb. | March. | April. | May. | June. | July. | Aug. | Sept. | Oct. | Nov. | Dec. |
|---|---|---|---|---|---|---|---|---|---|---|---|---|
| 0·000 | 358 | 560 | 865 | 774 | 584 | 431 | 490 | 643 | 602 | 700 | 599 | 521 |

These values differ little from those for the mean difference; the law of variation is therefore the same, namely, maxima near the equinoxes and minima near the solstices.

*Diurnal Variation of the Positive and Negative Sums of Disturbances.*—The following are the sums of disturbances in scale divisions for each hour in 1844.

| $12^h$ | 1 A.M. | $2^h$ | $3^h$ | $4^h$ | $5^h$ | $6^h$ | $7^h$ | $8^h$ | $9^h$ | $10^h$ | $11^h$ | $0^h$ | $1^h$ P.M. | $2^h$ | $3^h$ | $4^h$ | $5^h$ | $6^h$ | $7^h$ | $8^h$ | $9^h$ | $10^h$ | $11^h$ |
|---|---|---|---|---|---|---|---|---|---|---|---|---|---|---|---|---|---|---|---|---|---|---|---|
| +495 | 424 | 415 | 450 | 482 | 661 | 665 | 586 | 636 | 625 | 619 | 787 | 879 | 759 | 829 | 951 | 1090 | 1005 | 841 | 726 | 685 | 488 | 504 | 425 |
| −843 | 846 | 924 | 749 | 633 | 729 | 521 | 618 | 694 | 742 | 775 | 612 | 521 | 476 | 426 | 512 | 414 | 478 | 538 | 632 | 636 | 921 | 808 | 940 |

The sums of *positive* disturbances—those which increase the value of the horizontal component—are a maximum at $4^h\ 10^m$ P.M., and they are a minimum about $1^h\ 30^m$ A.M.; there is the appearance of a secondary

maximum about $6^h$ A.M., but it is not well marked. The sums of *negative* disturbances are a minimum about $3^h\ 10^m$ P.M., and a maximum about midnight; they are a secondary minimum at $6^h\ 10^m$ A.M., and a maximum at $10^h\ 10^m$ A.M. On the whole, therefore, the epochs of maximum for the positive disturbances are within an hour of those of minimum for the negative disturbance, and *vice versa*.

*Diurnal Variation of the Mean Disturbance.*—The following are the mean disturbances, in scale divisions for each hour, without regard to sign:—

| 12h | 1h A.M. | 2h | 3h | 4h | 5h | 6h | 7h | 8h | 9h | 10h | 11h | 0h | 1h P.M. | 2h | 3h | 4h | 5h | 6h | 7h | 8h | 9h | 10h | 11h |
|---|---|---|---|---|---|---|---|---|---|---|---|---|---|---|---|---|---|---|---|---|---|---|---|
| 4·26 | 4·05 | 4·41 | 3·82 | 3·55 | 4·43 | 3·78 | 3·83 | 4·24 | 4·35 | 4·44 | 4·30 | 4·46 | 3·93 | 4·00 | 4·66 | 4·79 | 4·72 | 4·39 | 4·32 | 4·21 | 4·49 | 4·18 | 4·35 |

These quantities give nearly the same law of variation as the mean differences; the maximum disturbance of the horizontal component occurs at $4^h\ 10^m$ P.M., the minimum about $5^h$ A.M.; a secondary maximum occurs about $10^h$ A.M., and a minimum about $1^h$ P.M.

*Annual Variation of the* number *of Positive Disturbances.*—The following are the numbers per cent. of hourly observations in each month, which were positive or greater than the normal means at the corresponding hours:—

| Jan. | Feb. | March. | April. | May. | June. | July. | Aug. | Sept. | Oct. | Nov. | Dec. |
|---|---|---|---|---|---|---|---|---|---|---|---|
| 54·0 | 57·7 | 66·0 | 52·1 | 52·6 | 45·0 | 46·6 | 52·8 | 55·2 | 60·6 | 56·9 | 61·1 |

The greatest number of positive disturbances occurs near the equinoxes, and the least number at the summer solstice; on the whole, the number for the sun south of the equator is greater than for the sun north of the equator, the number per cent. for the former being 58·4, and for the latter 50·7. In the year 1844, there were, in 100 observations, 54·5 greater and 45·5 less than the normal means at the corresponding hours.

*Diurnal Variation of the* numbers *of Positive Disturbances.*—The numbers per cent. of hourly observations which were greater than the monthly means at the corresponding hours, are as follow:—

| 12h | 1h A.M. | 2h | 3h | 4h | 5h | 6h | 7h | 8h | 9h | 10h | 11h | 0h | 1h P.M. | 2h | 3h | 4h | 5h | 6h | 7h | 8h | 9h | 10h | 11h |
|---|---|---|---|---|---|---|---|---|---|---|---|---|---|---|---|---|---|---|---|---|---|---|---|
| 47·5 | 47·8 | 44·9 | 50·3 | 51·6 | 58·0 | 55·4 | 55·1 | 55·4 | 53·5 | 54·1 | 59·2 | 60·5 | 57·6 | 63·4 | 59·9 | 67·2 | 64·0 | 58·9 | 57·3 | 53·8 | 46·5 | 52·5 | 46·5 |

The number of positive disturbances is a maximum at $4^h$ P.M., and a minimum about $2^h$ A.M.; there is the appearance of a secondary maximum at $5^h$ A.M., and minimum at $9^h\ 30^m$ A.M. From about $9^h$ P.M. till $2^h$ A.M., the number of positive disturbances is less than the number of negative disturbances; at all the other hours of the day the number of positive disturbances is greatest. There are nearly two positive disturbances for one negative disturbance at $4^h$ P.M.

*Diurnal Variation of the Positive and Negative* means *of Disturbance.*—A comparison of the diurnal laws of variation for the *sums* and *numbers* of positive disturbances, will shew that they give nearly the same epochs of maxima and minima; it is uncertain, therefore, whether the variation of the sums depends solely or chiefly on the variation of the numbers of disturbances which are positive or negative. The following are the mean values, in scale divisions, of the positive and negative disturbances for each hour, obtained by dividing the sums of the positive disturbances by their number, and the sums of the negative disturbances by their number:—

| | 12h | 1h A.M. | 2h | 3h | 4h | 5h | 6h | 7h | 8h | 9h | 10h | 11h | 12h | 1h P.M. | 2h | 3h | 4h | 5h | 6h | 7h | 8h | 9h | 10h | 11h |
|---|---|---|---|---|---|---|---|---|---|---|---|---|---|---|---|---|---|---|---|---|---|---|---|---|
| + | 3·32 | 2·83 | 2·94 | 2·85 | 2·98 | 3·63 | 3·82 | 3·39 | 3·65 | 3·72 | 3·64 | 3·96 | 4·62 | 4·19 | 4·16 | 5·05 | 5·17 | 5·00 | 4·55 | 4·03 | 4·05 | 3·35 | 3·05 | 2·91 |
| − | 5·11 | 5·16 | 5·34 | 4·80 | 4·17 | 5·52 | 3·72 | 4·38 | 4·96 | 5·08 | 5·39 | 4·78 | 4·20 | 3·58 | 3·71 | 4·06 | 4·02 | 4·23 | 4·17 | 4·72 | 4·38 | 5·48 | 5·42 | 5·60 |

These values differ considerably; the law of their variation is almost exactly that already obtained for the *sums* of positive and negative disturbance.

The maximum of the *mean* positive disturbance occurs about $4^h\ 10^m$ P.M.
The minimum ..... $2^h\ 10^m$ A.M.
There is also the appearance of a secondary maximum about $6^h$ A.M.
The maximum of the *mean* negative disturbance occurs about $1^h\ 30^m$ P.M.
The minimum ..... $11^h\ 0^m$ P.M.
There is also a secondary maximum about $6^h$ A.M., and minimum about $10^h$ A.M.

The numbers of positive and negative disturbances seem, on the whole, to obey the same law as their respective sums.

*Note on the least probable error of an observation of the horizontal component of magnetic force.*—Investigations for the probable errors of observation corresponding to those for the magnetic declination, have not been made for the horizontal component; it will not be difficult, however, to approximate to the least probable errors of an observation from the values of the mean difference. The mean difference of an observation is least in the month of January, and in the months of June and July, being 0·00035, 0·00040, and 0·00047, for the three months respectively; which, if the distribution of the errors follows nearly the same law as that found for the magnetic declination, will give probable errors of about 0·00024, 0·00027, and 0·00032, of the horizontal component.

The mean difference, for the year, of an observation of the horizontal component, is a minimum about $6^h$ A.M., and $1^h$ and $2^h$ P.M., being about 0·00050; the probable error is about 0·00034.

In order that an observation of the horizontal component should have the least probable error, it should be made in the months of January, June, or July—and early in the morning. The least probable errors are about $2^h$ A.M. in these three months, being less than two ten-thousandths of the whole horizontal component.

## VERTICAL COMPONENT OF MAGNETIC FORCE.

TABLE XXXVIII.—Mean Values of the Variations of the Vertical Component of Magnetic Force, the whole Vertical Component being Unity, for each Civil Week-Day, Week, and Month of 1844.

| Civil. Day. | Jan. | Feb. | March. | April. | May. | June. | July. | Aug. | Sept. | Oct. | Nov. | Dec. |
|---|---|---|---|---|---|---|---|---|---|---|---|---|
| | 0·00 | 0·00 | 0·00 | 0·00 | 0·00 | 0·00 | 0·00 | 0·00 | 0·00 | 0·00 | 0·00 | 0·00 |
| 1 | 7994 | 7784 | 7531 | 7351 | 7065 | 6888 | 6572 | 6402 | [6297] | 6027 | 6031 | [6084] |
| 2 | 8014 | 7709 | 7277 | 7214 | 7156 | [6976] | 6664 | 6269 | 6386 | 6448 | 6015 | 6092 |
| 3 | 7945 | 7521 | [7299] | 7491 | 7129 | 7044 | 6617 | 6208 | 6315 | 6331 | [6046] | 6057 |
| 4 | 7907 | [7646] | 7178 | 7415 | 7392 | 6993 | 6668 | [6357] | 6353 | 6322 | 6054 | 6087 |
| 5 | 7850 | 7691 | 7264 | 7408 | [7215] | 7030 | 6657 | 6344 | 6295 | 6330 | 6054 | 5897 |
| 6 | 7877 | 7587 | 7186 | 7108 | 7222 | 6978 | 6634 | 6445 | 6389 | [6303] | 6134 | 5996 |
| 7 | [7896] | 7582 | 7292 | [7343] | 7267 | 6986 | [6682] | 6476 | 6274 | 6293 | 6238 | 5980 |
| 8 | 7912 | 7661 | 7189 | 7456 | 7123 | 6916 | 6782 | 6510 | [6320] | 6271 | 6138 | [5940] |
| 9 | 7917 | 7501 | 7433 | 7325 | 6981 | [6921] | 6672 | 6615 | 6410 | 6269 | 6081 | 5945 |
| 10 | 7916 | 7534 | [7413] | 7348 | 7267 | 6861 | 6678 | 6298 | 6230 | 6150 | [6173] | 5924 |
| 11 | 7893 | [7509] | 7450 | 7397 | 7349 | 6893 | 6637 | [6386] | 6321 | 6141 | 6161 | 5896 |
| 12 | 7887 | 7521 | 7603 | 7438 | [7104] | 6893 | 6577 | 6279 | 6282 | 6159 | 6233 | 5856 |
| 13 | 7913 | 7458 | 7509 | 7409 | 7174 | 6791 | 6636 | 6253 | 6294 | [6119] | 6186 | 5875 |
| 14 | [7893] | 7378 | 7524 | [7447] | 7087 | 6894 | [6607] | 6360 | 6328 | 6086 | 6106 | 6167 |
| 15 | 7900 | 7219 | 7491 | 7254 | 6767 | 7014 | 6684 | 6349 | [6248] | 6097 | 6172 | [6001] |
| 16 | 7893 | 7314 | 7555 | 7284 | 7107 | [6872] | 6610 | 6352 | 6178 | 6083 | 6761 | 6124 |
| 17 | 7873 | 7226 | [7440] | 7901 | 7133 | 6768 | 6499 | 6353 | 6136 | 6143 | [6311] | 6037 |
| 18 | 7853 | [7282] | 7392 | 7359 | 7222 | 6831 | 6491 | [6327] | 6271 | 6186 | 6280 | 5947 |
| 19 | 7718 | 7261 | 7360 | 7485 | [7076] | 6935 | 6567 | 6370 | 6306 | 6225 | 6288 | 5932 |
| 20 | 7800 | 7334 | 7318 | 7453 | 7047 | 6936 | 6527 | 6263 | 6096 | [6079] | 6262 | 6050 |
| 21 | [7803] | 7338 | 7300 | [7394] | 6989 | 6893 | [6510] | 6278 | 6412 | 5684 | 6173 | 6009 |
| 22 | 7850 | 7357 | 7398 | 7395 | 6961 | 6862 | 6477 | 6453 | [6249] | 6059 | 6209 | [5972] |
| 23 | 7776 | 7419 | 7391 | 7399 | 6605 | [6771] | 6479 | 6492 | 6337 | 6176 | 5971 | 5969 |
| 24 | 7824 | 7379 | [7378] | 7273 | 7094 | 6744 | 6519 | 6253 | 6211 | 6060 | [6093] | 5931 |
| 25 | 7585 | [7414] | 7395 | 7424 | 6949 | 6628 | 6502 | [6341] | 6130 | 6096 | 6052 | 5942 |
| 26 | 7709 | 7420 | 7348 | 7400 | [6888] | 6564 | 6408 | 6287 | 5955 | 5804 | 6074 | 5949 |
| 27 | ..... | 7414 | 7434 | 7160 | 6843 | 6601 | 6487 | 6299 | 6355 | [6002] | 6077 | 5887 |
| 28 | [7654] | 7496 | 7390 | [7313] | 6890 | 6627 | [6375] | 6263 | 6138 | 5975 | 6082 | 5993 |
| 29 | 7690 | 7358 | 7290 | 7466 | 6947 | 6615 | 6324 | 6288 | [6198] | 6019 | 6080 | [6094] |
| 30 | 7661 | | 6360 | 7362 | 6922 | [6616] | 6323 | 6211 | 6264 | 6059 | 6109 | 6326 |
| 31 | 7623 | | [7183] | | 6980 | | 6204 | 6229 | | 5986 | | 6206 |
| Mean | 7838 | 7458 | 7341 | 7384 | 7062 | 6847 | 6552 | 6341 | 6267 | 6129 | 6155 | 6003 |

Table XXXVIII. has been formed from the daily means in micrometer divisions by the following formula:—

$$f = n\ 0{\cdot}00001,$$

where $f$ is the quantity in the Table, and $n$ is the daily mean in micrometer divisions corrected for temperature.

The balance-needle was removed on the 27th January 1844, for the purpose of determining its temperature coefficient; it was readjusted on the evening of the same day; all the observations before that date have been rendered comparable with those after it by the application of a correction.—*See Introduction.*

In order to render the means in Table XV., p. 238, 1843, comparable with the means in the preceding Table, the following formula must be employed:—

$$V = \frac{v + c}{0{\cdot}9} + 0{\cdot}00223.$$

Where V is the reduced value of the mean for 1843, $v$ is the value in Table XV., 1843; $c$ is the correction for the mean of 9 observations to the mean of 24 observations, as given, line 6 from foot of page 240, 1843; 223 micrometer divisions being the difference of the zeros for 1843 and 1844.

The mean value of the variations of the vertical component, from Table XXXVIII. = 0·006781.

*Secular Change.*—When the monthly means for 1843 are rendered comparable with the monthly means for 1844, we obtain the following comparisons for the secular change of the vertical component:—

| | | Jan. | Feb. | March. | April. | May. | June. | July. | Aug. | Sept. | Oct. | Nov. | Dec. |
|---|---|---|---|---|---|---|---|---|---|---|---|---|---|
| 1843, . | 0·00 | 9922 | 9717 | 9312 | 8989 | 8794 | 8879 | 8733 | 8554 | 8163 | 8120 | 8093 | 7998 |
| 1844, . | 0·00 | 7838 | 7458 | 7341 | 7384 | 7061 | 6847 | 6552 | 6341 | 6267 | 6129 | 6155 | 6003 |
| Secular change, | 0·00 | 2084 | 2259 | 1971 | 1605 | 1733 | 2032 | 2181 | 2213 | 1896 | 1991 | 1938 | 1995 |

The mean secular change corresponding to the year, from July 1, 1843, till July 1, 1844 = −0·001994.

A comparison of the mean for 1844 with that for 1845, gives the secular change for the year from July 1, 1844, till July 1, 1845 = −0·001837, whence

The mean secular change corresponding to the year, from January 1, 1844, till January 1, 1845, = −0·001915.

The mean secular changes for three years are as follow:—

July 1, 1842, till July 1, 1843,..... = −0·002298
..... 1843, ..... 1844,..... = −0·001994
... ..... 1844, ..... 1845,..... = −0·001837

*Annual Period.*—The mean vertical component diminishes with the greatest rapidity from January to February, and in the months from May till August; it increases slightly from March to April, and from October to November. If the secular change be eliminated from the means at the foot of Table XXXVIII. by the application of the corrections $+ n.0{\cdot}00016$, where $n$ is the number of the month after January, we obtain the following quantities:—

| | Jan. | Feb. | March. | April. | May. | June. | July. | Aug. | Sept. | Oct. | Nov. | Dec. |
|---|---|---|---|---|---|---|---|---|---|---|---|---|
| 0·00 | 7838 | 7618 | 7661 | 7864 | 7701 | 7647 | 7512 | 7461 | 7547 | 7569 | 7755 | 7763 |

These quantities give a result considerably different from that obtained from the observations in 1843; whether this difference be real, or merely instrumental, cannot be determined at present. From the above mean values of the variations, the vertical component is a minimum in August, and a maximum in December or January; it is also a secondary minimum about the end of February, and a maximum again in April.

*Differences of the Daily Means from the Monthly Means.*—The following are the average differences of the daily means from their corresponding monthly means:—

| | Jan. | Feb. | March. | April. | May. | June. | July. | Aug. | Sept. | Oct. | Nov. | Dec. |
|---|---|---|---|---|---|---|---|---|---|---|---|---|
| 0·000 | 089 | 123 | 135 | 091 | 138 | 117 | 102 | 081 | 085 | 121 | 097 | 087 |
| 0·000 | 100 | 116 | 116 | 121 | 115 | 119 | 100 | 089 | 096 | 101 | 102 | 091 |

In order to eliminate the accidental irregularities, the mean of each three months has been taken as a mean for the middle month; these are given in the second line above, from whence, the differences of the daily means from their corresponding monthly means are a maximum in April, and a minimum in August; they are a secondary maximum in October or November, and a minimum in December. These epochs are, on the whole,

not much different from those for the anuual period, as deduced from the observations in 1844; and the result might be stated in the manner already done for the horizontal component and magnetic declination. The average difference of the daily means is a maximum when the vertical component is a maximum, and *vice versa*. In the case of the horizontal component, the average difference was a maximum when the horizontal component was a minimum.

The following are the averages of the positive and negative differences:—

| | Jan. | Feb. | March. | April. | May. | June. | July. | Aug. | Sept. | Oct. | Nov. | Dec. |
|---|---|---|---|---|---|---|---|---|---|---|---|---|
| +0·000 | 068 | 140 | 109 | 079 | 124 | 091 | 092 | 084 | 066 | 117 | 115 | 113 |
| −0·000 | 128 | 119 | 175 | 107 | 155 | 162 | 115 | 078 | 118 | 126 | 084 | 070 |

The positive departures from the monthly mean are greatest in the months of November, December, February, and August; they are least in the other months; the negative departures are greatest in the course of the year.

TABLE XXXIX.—Mean Variations of the Vertical Component of Magnetic Force, after eliminating the Secular Change, with reference to the Moon's Age, Declination, and distance from the Earth, for 1844.

| Moon's Age. | Variations of Vertical Component. | Moon's Age. | Variations of Vertical Component. | After Moon farthest North. | Variations of Vertical Component. | After Moon farthest North. | Variations of Vertical Component. | Before and after Perigee. | Variations of Vertical Component. | Before and after Apogee. | Variations of Vertical Component. |
|---|---|---|---|---|---|---|---|---|---|---|---|
| Day. | 0·00 | Day. | 0·00 | Day. | 0·00 | Day. | 0·00 | Day. | 0·00 | Day. | 0·00 |
| 15 | 0000 | 0 | 0132 | 0 | 0113 | 14 | 0081 | 7 | 0121 | 7 | 0064 |
| 16 | 0038 | 1 | 0086 | 1 | 0074 | 15 | 0035 | 6 | 0093 | 6 | 0101 |
| 17 | 0082 | 2 | 0092 | 2 | 0071 | 16 | 0045 | 5 | 0000 | 5 | 0060 |
| 18 | 0078 | 3 | 0086 | 3 | 0076 | 17 | 0093 | 4 | 0065 | 4 | 0049 |
| 19 | 0038 | 4 | 0080 | 4 | 0034 | 18 | 0065 | 3 | 0062 | 3 | 0051 |
| 20 | 0126 | 5 | 0113 | 5 | 0000 | 19 | 0027 | 2 | 0059 | 2 | 0093 |
| 21 | 0113 | 6 | 0102 | 6 | 0035 | 20 | 0074 | 1 | 0052 | 1 | 0058 |
| 22 | 0103 | 7 | 0124 | 7 | 0063 | 21 | 0022 | P | 0045 | A | 0070 |
| 23 | 0146 | 8 | 0110 | 8 | 0050 | 22 | 0018 | 1 | 0052 | 1 | 0114 |
| 24 | 0148 | 9 | 0119 | 9 | 0061 | 23 | 0088 | 2 | 0077 | 2 | 0133 |
| 25 | 0126 | 10 | 0030 | 10 | 0013 | 24 | 0004 | 3 | 0057 | 3 | 0085 |
| 26 | 0115 | 11 | 0074 | 11 | 0027 | 25 | 0063 | 4 | 0063 | 4 | 0092 |
| 27 | 0104 | 12 | 0033 | 12 | 0007 | 26 | 0057 | 5 | 0156 | 5 | 0102 |
| 28 | 0046 | 13 | 0039 | 13 | 0078 | 27 | 0087 | 6 | 0091 | 6 | 0109 |
| 29 | 0075 | 14 | 0026 | | | | | 7 | 0078 | 7 | 0086 |

This Table has been formed in the same manner as Table II., the rate of secular change employed being 0·001915 *per annum*, or = 0·0000052 *per diem*.

*Variations of the Vertical Component with reference to the Moon's Age.*—The means for this component present more irregularities than those for the horizontal component. The following are the means of groups:—

| | | | |
|---|---|---|---|
| 14 days to 16 days, Full Moon, | 0·000021 | 29 days to 1 day, New Moon, | 0·000091 |
| 17 ..... 20 ... | 0·000081 | 2 ..... 5 days, | 0·000093 |
| 21 ..... 24 ... | 0·000127 | 6 ..... 9 ... | 0·000114 |
| 25 ..... 28 ... | 0·000098 | 10 ..... 13 ... | 0·000041 |

The vertical component is a minimum at opposition, it is a maximum near the quadratures, and a secondary minimum at conjunction.

*Variations of the Vertical Component with reference to the Moon's Declination.*—The following are the means of groups of the second portion of Table XXXIX.

| | | | |
|---|---|---|---|
| 27 days to 1 day, Moon farthest North, | 0·000091 | 13 days to 15 days, Moon farthest South, | 0·000065 |
| 2 ..... 5 days, | 0·000045 | 16 ..... 19 ... | 0·000057 |
| 6 ..... 8 ... | 0·000049 | 20 ..... 22 ... | 0·000038 |
| 9 ..... 12 ... | 0·000027 | 23 ..... 26 ... | 0·000053 |

From these means the vertical component is a maximum when the moon has its greatest north declination; it is a secondary maximum when the moon is farthest south, and a minimum between these epochs.

TABLE XL.—Diurnal Range of the Vertical Component of Magnetic Force for each Civil Day, as deduced from the Hourly Observations, with the Mean for each Week in 1844.

| Civil Day. | Jan. | Feb. | March. | April. | May. | June. | July. | Aug. | Sept. | Oct. | Nov. | Dec. |
|---|---|---|---|---|---|---|---|---|---|---|---|---|
| | 0·00 | 0·00 | 0·00 | 0·00 | 0·00 | 0·00 | 0·00 | 0·00 | 0·00 | 0·00 | 0·00 | 0·00 |
| 1 | 0317 | 1111 | 0302 | 2010 | 1535 | 0318 | 0349 | 1553 | [1322] | 6078 | 0424 | [0436] |
| 2 | 0606 | 1571 | 2773 | 2298 | 1036 | [0259] | 0340 | 1860 | 0457 | 1653 | 0511 | 0160 |
| 3 | 0269 | 0820 | [2066] | 1710 | 1637 | 0214 | 0352 | 1555 | 0432 | 0899 | [0504] | 0132 |
| 4 | 0584 | [1002] | 1876 | 1187 | 0239 | 0328 | 0442 | [1048] | 0875 | 0492 | 0597 | 0529 |
| 5 | 1144 | 1030 | 2597 | 0420 | [1008] | 0229 | 0298 | 0678 | 0379 | 0514 | 0367 | 0522 |
| 6 | 0675 | 0973 | 3232 | 1911 | 1095 | 0405 | 0215 | 0410 | 0369 | [0491] | 0630 | 0103 |
| 7 | [0737] | 0505 | 2498 | [0736] | 0494 | 0375 | [0519] | 0231 | 0536 | 0302 | 0150 | 0146 |
| 8 | 0733 | 1295 | 2837 | 0366 | 1549 | 0298 | 1170 | 0344 | [0427] | 0504 | 0261 | [0218] |
| 9 | 0625 | 0704 | 1550 | 0281 | 1902 | [0427] | 0549 | 2309 | 0338 | 0236 | 0260 | 0102 |
| 10 | 0662 | 0576 | [1442] | 0252 | 0676 | 0389 | 0441 | 0712 | 0623 | 0173 | [0634] | 0285 |
| 11 | 0207 | [0523] | 0318 | 0480 | 0394 | 0814 | 0319 | [0735] | 0315 | 0166 | 1200 | 0148 |
| 12 | 0225 | 0232 | 0884 | 0221 | [0973] | 0279 | 0347 | 0523 | 0261 | 0140 | 1604 | 0101 |
| 13 | 0223 | 0206 | 0567 | 0304 | 0420 | 0318 | 0589 | 0353 | 0216 | 0196 | 0332 | 0149 |
| 14 | [0195] | 0124 | 0134 | [1196] | 0409 | 0322 | [0500] | 0169 | 0634 | 0166 | 0581 | 2310 |
| 15 | 0114 | 0381 | 0233 | 0391 | 2039 | 0360 | 0514 | 0318 | [0481] | 0286 | 0180 | [0602] |
| 16 | 0157 | 0136 | 0158 | 0495 | 0777 | [0520] | 0580 | 0355 | 0368 | 0243 | 6560 | 0631 |
| 17 | 0245 | 0376 | [0315] | 5284 | 0422 | 1181 | 0654 | 0579 | 0852 | 0471 | [1591] | 0244 |
| 18 | 0463 | [0248] | 0483 | 0835 | 0265 | 0680 | 0878 | [0342] | 0557 | 0246 | 0743 | 0176 |
| 19 | 0169 | 0127 | 0514 | 0328 | [0527] | 0257 | 0225 | 0267 | 0305 | 0283 | 1219 | 0539 |
| 20 | 0201 | 0326 | 0368 | 0211 | 0249 | 0520 | 0303 | 0286 | 2274 | [1541] | 0266 | 1081 |
| 21 | [0334] | 0142 | 0406 | [0445] | 0512 | 0870 | [0368] | 0249 | 0902 | 6204 | 0256 | 1295 |
| 22 | 0594 | 0624 | 0186 | 0347 | 0940 | 0440 | 0240 | 1600 | [0990] | 1109 | 5668 | [0582] |
| 23 | 0387 | 0341 | 0228 | 0636 | 2794 | [0483] | 0337 | 2366 | 0447 | 0936 | 2555 | 0263 |
| 24 | 0189 | 0107 | [0373] | 0311 | 0467 | 0303 | 0227 | 1248 | 0558 | 0657 | [1533] | 0159 |
| 25 | 2178 | [0392] | 0320 | 2827 | 0593 | 0423 | 1454 | [1093] | 1454 | 1309 | 0418 | 0157 |
| 26 | 0245 | 0214 | 0285 | 2166 | [0893] | 0345 | 0719 | 0554 | 3858 | 2762 | 0151 | 0431 |
| 27 | ..... | 0285 | 0816 | 1860 | 0646 | 0381 | 0987 | 0363 | 1328 | [1164] | 0153 | 0328 |
| 28 | [0746] | 0783 | 0895 | [1753] | 0517 | 0312 | [0789] | 0429 | 1566 | 1354 | 1271 | 0212 |
| 29 | 0481 | 1615 | 1299 | 1005 | 0340 | 0460 | 0816 | 1704 | [2997] | 0641 | 0382 | [0648] |
| 30 | 0385 | | 5495 | 1123 | 0208 | [0366] | 0306 | 2741 | 3505 | 0259 | 0142 | 1465 |
| 31 | 0439 | | [2284] | | 0255 | | 0451 | 1723 | | 0496 | | 1057 |

*Annual Variation of the Diurnal Ranges of the Vertical Component.*—The following are the monthly means of the diurnal ranges :—

| | Jan. | Feb. | March. | April. | May. | June. | July. | Aug. | Sept. | Oct. | Nov. | Dec. |
|---|---|---|---|---|---|---|---|---|---|---|---|---|
| 0·00 | 0481 | 0584 | 1202 | 1164 | 0830 | 0433 | 0522 | 0944 | 0936 | 1058 | 1034 | 0489 |

The diurnal range is a minimum at the solstices and a maximum near the equinoxes.

When the means of the diurnal ranges are compared with the ranges of the mean diurnal variations (see Table XLIII.), we obtain the following quantities, excesses of the former :—

| | Jan. | Feb. | Mar. | April. | May. | June. | July. | Aug. | Sept. | Oct. | Nov. | Dec. |
|---|---|---|---|---|---|---|---|---|---|---|---|---|
| 0·000 | 210 | 311 | 514 | 459 | 314 | 200 | 224 | 357 | 320 | 356 | 446 | 197 |

so that the causes which render the mean diurnal range greater than the range of the mean diurnal variation have their minimum effect at the solstices, and their maximum in March and November. The same result has been obtained for the horizontal component and magnetic declination.

TABLE XLI.—Means of the Diurnal Ranges of the Vertical Component of Magnetic Force, with reference to the Moon's Age, Declination, and Distance from the Earth, for 1844.

| Moon's Age. | Mean Diurnal Range. | Moon's Age. | Mean Diurnal Range. | After Moon farthest North. | Mean Diurnal Range. | After Moon farthest North. | Mean Diurnal Range. | Before and after Perigee. | Mean Diurnal Range. | Before and after Apogee. | Mean Diurnal Range. |
|---|---|---|---|---|---|---|---|---|---|---|---|
| Day. | 0·00 | Day. | 0·00 | Day. | 0·00 | Day. | 0·00 | Day. | 0·00 | Day. | 0·00 |
| 15 | 1150 | 0 | 0748 | 0 | 0591 | 14 | 0591 | 7 | 0806 | 7 | 0880 |
| 16 | 1230 | 1 | 0488 | 1 | 0494 | 15 | 0678 | 6 | 0638 | 6 | 0754 |
| 17 | 1226 | 2 | 0513 | 2 | 0844 | 16 | 0417 | 5 | 1221 | 5 | 0996 |
| 18 | 1250 | 3 | 0366 | 3 | 0634 | 17 | 0963 | 4 | 0790 | 4 | 0765 |
| 19 | 1362 | 4 | 0385 | 4 | 1070 | 18 | 0793 | 3 | 0651 | 3 | 1228 |
| 20 | 0758 | 5 | 0589 | 5 | 1172 | 19 | 0919 | 2 | 0702 | 2 | 1541 |
| 21 | 0744 | 6 | 0448 | 6 | 0898 | 20 | 0835 | 1 | 0905 | 1 | 0945 |
| 22 | 0559 | 7 | 0457 | 7 | 0859 | 21 | 0995 | P | 0688 | A | 0877 |
| 23 | 0440 | 8 | 0867 | 8 | 0794 | 22 | 0785 | 1 | 0915 | 1 | 0441 |
| 24 | 0435 | 9 | 0980 | 9 | 0766 | 23 | 0800 | 2 | 0736 | 2 | 0524 |
| 25 | 0566 | 10 | 1309 | 10 | 0672 | 24 | 1189 | 3 | 0595 | 3 | 0523 |
| 26 | 0342 | 11 | 0888 | 11 | 0484 | 25 | 0868 | 4 | 0561 | 4 | 0577 |
| 27 | 0425 | 12 | 1491 | 12 | 0706 | 26 | 0928 | 5 | 1045 | 5 | 0604 |
| 28 | 0453 | 13 | 1197 | 13 | 0609 | 27 | 0650 | 6 | 0716 | 6 | 0826 |
| 29 | 0384 | 14 | 1334 | | | | | 7 | 0887 | 7 | 0904 |

Table XLI. has been formed from Table XL. in the manner described for Table II.

*Variations of the Diurnal Range of the Vertical Component with reference to the Moon's Age.*—The means in the first portion of Table XLI. shew that the diurnal range of the vertical component is a minimum about conjunction and a maximum about opposition. The following are means of groups:—

| | | | |
|---|---|---|---|
| 14 days to 16 days, Full Moon, | 0·001238 | 29 days to 1 day, New Moon, | 0·000540 |
| 17 ..... 20 ... | 0·001149 | 2 ..... 5 days, | 0·000463 |
| 21 ..... 24 ... | 0·000544 | 6 ..... 9 ... | 0·000688 |
| 25 ..... 28 ... | 0·000446 | 10 ..... 13 ... | 0·001221 |

Here also, as in the case of the horizontal component, there is an appearance of a secondary maximum at New Moon, but it is not by any means distinct.

*Variations of the Diurnal Range of the Vertical Component with reference to the Moon's Declination.*—This result is also well marked in the means in the second portion of Table XLI. The diurnal range of the vertical component is a minimum when the moon has its greatest north and south declination, and it is a maximum when the moon is near, but north of, the equator. The following are means of groups:—

| | | | |
|---|---|---|---|
| 27 days to 1 day, Moon farthest North, | 0·000578 | 13 days to 15 days, Moon farthest South, | 0·000626 |
| 2 ..... 5 days, | 0·000930 | 16 ..... 19 ... | 0·000773 |
| 6 ..... 8 ... | 0·000850 | 20 ..... 22 ... | 0·000872 |
| 9 ..... 12 ... | 0·000657 | 23 ..... 26 ... | 0·000946 |

## TABLE XLII.—Hourly Means of the Micrometer Readings of the Balance Magnetometer, corrected for Temperature, 1844.

| Mean Time. Gött. | Mean Time. Mak. | Jan. | Feb. | March. | April. | May. | June. | July. | Aug. | Sept. | Oct. | Nov. | Dec. | Year. |
|---|---|---|---|---|---|---|---|---|---|---|---|---|---|---|
| h. | h. | Mic. Div. | Mic. Div. | Mic. Div. | Mic. Div. | Mic. Div. | Mic. Div. | Mic. Div. | Mic. Div. | Mic. Div. | Mic. Div. | Mic. Div. | Mic. Div. | Mic. Div. |
| 13 | 12 | 779·1 | 739·7 | 709·4 | 704·8 | 680·3 | 681·0 | 647·8 | 606·7 | 599·3 | 594·1 | 593·2 | 593·6 | 660·7 |
| 14 | 13 | 781·8 | 738·6 | 704·6 | 712·8 | 681·9 | 676·2 | 644·8 | 609·0 | 602·0 | 591·2 | 594·2 | 596·2 | 661·1 |
| 15 | 14 | 779·4 | 738·8 | 700·8 | 715·7 | 680·6 | 676·8 | 645·3 | 606·3 | 603·2 | 586·7 | 599·1 | 591·1 | 660·3 |
| 16 | 15 | 775·3 | 736·8 | 707·5 | 713·9 | 684·8 | 682·1 | 649·6 | 616·1 | 601·7 | 582·4 | 599·3 | 590·7 | 661·7 |
| 17 | 16 | 770·6 | 738·3 | 712·0 | 711·8 | 688·2 | 684·1 | 654·4 | 624·7 | 605·7 | 573·2 | 599·7 | 589·6 | 662·7 |
| 18 | 17 | 768·5 | 737·0 | 710·4 | 712·8 | 694·9 | 687·0 | 657·3 | 631·1 | 610·2 | 582·7 | 600·6 | 589·1 | 665·1 |
| 19 | 18 | 770·2 | 738·3 | 715·3 | 723·3 | 701·7 | 689·0 | 656·6 | 630·9 | 615·4 | 592·8 | 602·0 | 590·0 | 668·8 |
| 20 | 19 | 772·1 | 739·2 | 728·6 | 733·3 | 705·5 | 690·5 | 655·9 | 635·6 | 622·3 | 604·3 | 603·8 | 592·6 | 673·6 |
| 21 | 20 | 776·5 | 739·0 | 737·6 | 739·1 | 708·4 | 690·7 | 653·2 | 637·3 | 627·1 | 612·5 | 605·5 | 594·9 | 676·8 |
| 22 | 21 | 779·4 | 739·7 | 739·6 | 741·2 | 707·7 | 685·5 | 651·2 | 634·2 | 630·4 | 618·6 | 607·8 | 595·1 | 677·5 |
| 23 | 22 | 782·0 | 740·1 | 738·7 | 739·0 | 702·8 | 679·6 | 649·9 | 630·8 | 630·2 | 621·8 | 609·5 | 595·5 | 676·7 |
| 0 | 23 | 785·0 | 743·3 | 741·9 | 741·3 | 701·9 | 673·1 | 644·3 | 627·0 | 626·5 | 622·1 | 614·0 | 597·4 | 676·5 |
| 1 | 0 | 786·9 | 745·6 | 741·3 | 747·1 | 702·5 | 673·5 | 643·6 | 626·4 | 626·3 | 630·3 | 622·9 | 599·1 | 678·8 |
| 2 | 1 | 790·2 | 748·1 | 747·2 | 744·7 | 705·6 | 675·2 | 646·5 | 632·5 | 632·3 | 630·4 | 625·1 | 601·5 | 681·6 |
| 3 | 2 | 793·6 | 751·5 | 758·6 | 752·0 | 709·7 | 678·9 | 650·0 | 640·5 | 639·8 | 635·8 | 628·6 | 605·7 | 687·1 |
| 4 | 3 | 794·2 | 756·5 | 762·7 | 760·2 | 716·7 | 684·7 | 660·2 | 650·9 | 651·3 | 643·4 | 641·1 | 610·9 | 694·4 |
| 5 | 4 | 792·6 | 761·5 | 764·7 | 761·9 | 724·1 | 692·6 | 669·7 | 657·8 | 659·2 | 641·7 | 652·0 | 611·7 | 699·1 |
| 6 | 5 | 794·7 | 761·0 | 769·6 | 772·3 | 731·9 | 694·6 | 673·4 | 662·7 | 660·9 | 641·7 | 651·7 | 612·1 | 702·2 |
| 7 | 6 | 794·9 | 762·1 | 768·6 | 775·3 | 731·2 | 696·4 | 669·2 | 665·0 | 653·9 | 633·2 | 646·9 | 618·3 | 701·2 |
| 8 | 7 | 795·6 | 759·2 | 759·0 | 767·4 | 730·1 | 694·8 | 670·6 | 658·8 | 644·9 | 634·6 | 635·4 | 613·6 | 697·0 |
| 9 | 8 | 793·7 | 756·7 | 748·3 | 753·7 | 728·3 | 693·9 | 667·1 | 653·0 | 637·0 | 622·3 | 623·2 | 609·9 | 690·6 |
| 10 | 9 | 791·6 | 747·5 | 730·8 | 742·6 | 720·6 | 689·9 | 660·0 | 640·2 | 627·5 | 609·9 | 614·8 | 606·4 | 681·8 |
| 11 | 10 | 782·2 | 747·0 | 706·5 | 732·3 | 708·6 | 682·9 | 654·7 | 627·7 | 620·6 | 602·7 | 603·0 | 603·6 | 672·6 |
| 12 | 11 | 780·6 | 734·8 | 714·3 | 722·3 | 698·5 | 680·8 | 648·9 | 612·5 | 612·1 | 600·8 | 597·8 | 598·2 | 666·8 |

The true mean time at Makerstoun is $10^m$ in advance of the hours given in the second column of Table XLII.

## TABLE XLIII.—Diurnal Variations of the Vertical Component of Magnetic Force in 1844.

| Mak. M. T. | Jan. | Feb. | March. | April. | May. | June. | July. | Aug. | Sept. | Oct. | Nov. | Dec. | Year. |
|---|---|---|---|---|---|---|---|---|---|---|---|---|---|
| h. | 0·00 | 0·00 | 0·00 | 0·00 | 0·00 | 0·00 | 0·00 | 0·00 | 0·00 | 0·00 | 0·00 | 0·00 | 0·00 |
| 12 | 0106 | 0049 | 0086 | 0000 | 0000 | 0079 | 0042 | 0004 | 0000 | 0209 | 0000 | 0045 | 0004 |
| 13 | 0133 | 0038 | 0038 | 0080 | 0016 | 0031 | 0012 | 0027 | 0027 | 0180 | 0010 | 0071 | 0008 |
| 14 | 0109 | 0040 | 0000 | 0109 | 0003 | 0037 | 0017 | 0000 | 0039 | 0135 | 0059 | 0020 | 0000 |
| 15 | 0068 | 0020 | 0067 | 0091 | 0045 | 0090 | 0060 | 0098 | 0024 | 0092 | 0061 | 0016 | 0014 |
| 16 | 0021 | 0035 | 0112 | 0070 | 0079 | 0110 | 0108 | 0184 | 0064 | 0000 | 0065 | 0005 | 0024 |
| 17 | 0000 | 0022 | 0096 | 0080 | 0146 | 0139 | 0137 | 0248 | 0109 | 0095 | 0074 | 0000 | 0048 |
| 18 | 0017 | 0035 | 0145 | 0185 | 0214 | 0159 | 0130 | 0246 | 0161 | 0196 | 0088 | 0009 | 0085 |
| 19 | 0036 | 0044 | 0278 | 0285 | 0252 | 0174 | 0123 | 0293 | 0230 | 0311 | 0106 | 0035 | 0133 |
| 20 | 0080 | 0042 | 0368 | 0343 | 0281 | 0176 | 0096 | 0310 | 0278 | 0393 | 0123 | 0058 | 0165 |
| 21 | 0109 | 0049 | 0388 | 0364 | 0274 | 0124 | 0076 | 0279 | 0311 | 0454 | 0146 | 0060 | 0172 |
| 22 | 0135 | 0053 | 0379 | 0342 | 0225 | 0065 | 0063 | 0245 | 0309 | 0486 | 0163 | 0064 | 0163 |
| 23 | 0165 | 0085 | 0411 | 0365 | 0216 | 0000 | 0007 | 0207 | 0272 | 0489 | 0208 | 0083 | 0162 |
| 0 | 0184 | 0108 | 0405 | 0423 | 0222 | 0004 | 0000 | 0201 | 0270 | 0571 | 0297 | 0100 | 0185 |
| 1 | 0217 | 0133 | 0464 | 0399 | 0253 | 0021 | 0029 | 0262 | 0330 | 0572 | 0319 | 0124 | 0213 |
| 2 | 0251 | 0167 | 0578 | 0472 | 0294 | 0058 | 0064 | 0342 | 0405 | 0626 | 0354 | 0166 | 0267 |
| 3 | 0257 | 0217 | 0619 | 0554 | 0364 | 0116 | 0166 | 0446 | 0520 | 0702 | 0479 | 0218 | 0341 |
| 4 | 0241 | 0267 | 0639 | 0571 | 0438 | 0195 | 0261 | 0515 | 0599 | 0685 | 0588 | 0226 | 0388 |
| 5 | 0262 | 0262 | 0688 | 0675 | 0516 | 0215 | 0298 | 0564 | 0616 | 0685 | 0585 | 0230 | 0419 |
| 6 | 0264 | 0273 | 0678 | 0705 | 0509 | 0233 | 0256 | 0587 | 0546 | 0600 | 0537 | 0292 | 0409 |
| 7 | 0271 | 0244 | 0582 | 0626 | 0498 | 0217 | 0270 | 0525 | 0456 | 0614 | 0422 | 0245 | 0367 |
| 8 | 0252 | 0219 | 0475 | 0489 | 0480 | 0208 | 0235 | 0467 | 0377 | 0491 | 0300 | 0208 | 0303 |
| 9 | 0231 | 0127 | 0300 | 0378 | 0403 | 0168 | 0164 | 0339 | 0282 | 0367 | 0216 | 0173 | 0215 |
| 10 | 0137 | 0122 | 0057 | 0275 | 0283 | 0098 | 0111 | 0214 | 0213 | 0295 | 0098 | 0145 | 0123 |
| 11 | 0121 | 0000 | 0135 | 0175 | 0182 | 0077 | 0053 | 0062 | 0128 | 0276 | 0046 | 0091 | 0065 |

*Diurnal Variation of the Vertical Component.*—The following is the mean result for the year 1844:—The vertical component is a maximum at $5^h\ 20^m$ P.M., after which it diminishes with considerable rapidity till midnight, the principal minimum occurring about $1^h\ 30^m$ A.M.; it then increases till $9^h\ 10^m$ A.M, when it is a secondary maximum, becoming a secondary minimum at $10^h\ 40^m$ A.M., after which it increases to the principal maximum at $5^h$ P.M. The secondary maximum and minimum are distinctly marked, but the variation from the former to the latter is inconsiderable, being only 0·000010, while the variation from the principal maximum to the principal minimum is 0·000420, the whole vertical component being unity.

The form of the diurnal variation of the vertical component varies more with season than that of the diurnal variation for either of the elements already discussed. In winter the diurnal variation is single, the minimum occurring about $5^h$ A.M. and the maximum about $6^h$ P.M. In the months near the equinoxes the range of the variation is greatly increased, and its form is similar to that for the year given above; the secondary maximum and minimum become gradually more marked as the epoch approaches the summer solstice, till in the months of June and July the principal minimum occurs about noon, the range of the diurnal variation having diminished at the same time to nearly the same value as at the winter solstice. The following are the approximate times of maxima and minima in each month of the year, the principal maximum being indicated by + and minimum by −

| | Jan. | Feb. | March. | April. | May. | June. | July. | Aug. | Sept. | Oct. | Nov. | Dec. |
|---|---|---|---|---|---|---|---|---|---|---|---|---|
| | h. m. | h. m. | h. m. | h. m. | h. m. | h. m. | h. m. | h. m. | h. m. | h. m. | h. m. | h. m. |
| Max. P.M. + | 7·10 | 6·10 | 5·10 | 6·10 | 5·10 | 6·10 | 5·10 | 6·10 | 5·10 | 3·10 | 4·30 | 6·10 |
| Min. A.M. − | 5·10 | 3·10 | 2·10 | 12·10 | 1·10 | 1·30 | 1·10 − | 1·10 | 12·10 | 4·10 | 12·10 | 5·10 |
| Max. A.M. | ... | ... | ... | 9·10 | 8·10 | 8·0 | 5·10 | 8·10 | 9·40 | ... | ... | ... |
| Min. A.M. | ... | ... | ... | 10·10 | 11·10 − | 11·20 | 0·0 | 0·0 | (0·50) P.M. | | ... | ... |

The principal maximum occurs earliest at the equinoxes: the principal minimum occurs farthest from midnight at the winter solstice and nearest it as we approach the summer solstice. The principal minimum actually occurs near noon at the summer solstice, but the minimum near midnight differs little in value.

Adopting the method already pursued (see page 339) for the purpose of considering the diurnal variation when freed as far as possible from the effects of irregular causes, the following Tables have been formed.

TABLE XLIV.—Hourly Means of the Balance Magnetometer Micrometer Readings for the Ten Days least disturbed in each Month of 1844.

| Mak. M. T. | Jan. | Feb. | March. | April. | May. | June. | July. | Aug. | Sept. | Oct. | Nov. | Dec. | Year. |
|---|---|---|---|---|---|---|---|---|---|---|---|---|---|
| h. | Mic. Div. | Mic. Div. | Mic. Div. | Mic. Div. | Mic. Div. | Mic. Div. | Mic. Div. | Mic. Div. | Mic. Div. | Mic. Div. | Mic. Div. | Mic. Div. | Mic. Div. |
| 12 | 780·9 | 746·7 | 728·3 | 732·8 | 696·0 | 681·9 | 651·0 | 626·3 | 615·3 | 610·8 | 609·8 | 598·4 | 673·2 |
| 13 | 781·6 | 746·3 | 726·7 | 730·2 | 697·9 | 681·3 | 650·9 | 625·6 | 616·4 | 609·2 | 609·7 | 597·5 | 672·8 |
| 14 | 781·4 | 747·9 | 729·8 | 734·1 | 700·3 | 681·5 | 649·8 | 627·2 | 619·3 | 608·5 | 609·0 | 597·6 | 673·9 |
| 15 | 779·0 | 747·6 | 730·3 | 737·1 | 702·8 | 685·0 | 653·9 | 630·4 | 621·5 | 608·4 | 609·3 | 597·7 | 675·3 |
| 16 | 777·8 | 747·6 | 727·8 | 737·1 | 705·6 | 686·1 | 657·6 | 635·2 | 621·2 | 609·0 | 609·6 | 597·5 | 676·0 |
| 17 | 777·9 | 746·4 | 728·5 | 738·5 | 707·9 | 689·6 | 658·8 | 639·7 | 624·9 | 609·1 | 609·6 | 597·4 | 677·3 |
| 18 | 777·1 | 744·8 | 729·7 | 744·3 | 709·5 | 691·6 | 664·6 | 640·6 | 628·3 | 609·6 | 610·0 | 596·1 | 678·8 |
| 19 | 777·0 | 742·2 | 734·3 | 743·3 | 709·0 | 693·3 | 664·0 | 642·8 | 631·3 | 613·5 | 610·6 | 596·6 | 679·9 |
| 20 | 780·3 | 741·8 | 737·8 | 746·0 | 709·7 | 693·1 | 661·1 | 642·3 | 634·3 | 616·8 | 611·5 | 599·4 | 681·2 |
| 21 | 782·4 | 739·9 | 736·8 | 746·3 | 705·7 | 686·3 | 657·9 | 638·1 | 633·3 | 617·3 | 614·5 | 599·6 | 679·8 |
| 22 | 784·4 | 739·6 | 731·1 | 741·6 | 700·2 | 680·4 | 655·1 | 632·7 | 629·1 | 614·1 | 614·3 | 599·3 | 676·8 |
| 23 | 787·1 | 739·6 | 728·9 | 735·4 | 697·1 | 672·6 | 646·9 | 627·0 | 622·5 | 611·2 | 615·5 | 599·9 | 673·6 |
| 0 | 786·1 | 742·8 | 728·0 | 726·2 | 696·1 | 674·6 | 644·3 | 623·5 | 620·6 | 610·0 | 615·3 | 600·5 | 672·3 |
| 1 | 786·0 | 745·9 | 729·8 | 731·3 | 701·3 | 672·2 | 645·3 | 626·5 | 625·2 | 611·4 | 617·6 | 601·1 | 674·5 |
| 2 | 788·2 | 747·3 | 733·2 | 738·6 | 705·0 | 677·0 | 646·3 | 633·1 | 631·9 | 614·6 | 620·8 | 602·9 | 678·2 |
| 3 | 787·6 | 750·3 | 737·0 | 739·1 | 708·6 | 680·7 | 652·3 | 637·0 | 634·7 | 619·3 | 623·0 | 604·5 | 681·2 |
| 4 | 786·5 | 752·0 | 746·2 | 741·7 | 712·2 | 688·2 | 657·9 | 641·5 | 636·5 | 621·7 | 622·6 | 604·1 | 684·3 |
| 5 | 786·2 | 748·2 | 748·9 | 743·4 | 715·0 | 691·4 | 661·0 | 641·6 | 638·0 | 619·2 | 620·3 | 603·0 | 684·7 |
| 6 | 785·8 | 746·3 | 744·5 | 743·7 | 714·4 | 693·3 | 661·8 | 640·8 | 633·5 | 616·8 | 621·3 | 602·6 | 683·7 |
| 7 | 786·6 | 747·7 | 739·7 | 742·4 | 715·5 | 691·3 | 661·6 | 637·0 | 631·1 | 615·9 | 620·9 | 602·1 | 682·7 |
| 8 | 789·1 | 746·3 | 738·3 | 738·9 | 716·1 | 688·7 | 661·6 | 635·7 | 630·3 | 615·4 | 622·1 | 602·8 | 682·1 |
| 9 | 790·7 | 749·5 | 739·6 | 739·1 | 712·0 | 687·9 | 655·9 | 633·3 | 624·4 | 610·6 | 621·5 | 603·1 | 680·6 |
| 10 | 786·9 | 748·5 | 733·1 | 735·8 | 707·3 | 683·5 | 654·3 | 630·6 | 620·9 | 610·8 | 617·8 | 602·9 | 677·7 |
| 11 | 783·9 | 744·7 | 729·7 | 733·9 | 701·5 | 682·2 | 650·0 | 629·2 | 615·1 | 605·8 | 614·4 | 599·8 | 674·2 |

TABLE XLV.—Hourly Means of the Balance Magnetometer Micrometer Readings for the Five Days least disturbed in each Month of 1844.

| Mak. M. T. | Jan. | Feb. | March. | April. | May. | June. | July. | Aug. | Sept. | Oct. | Nov. | Dec. | Year. |
|---|---|---|---|---|---|---|---|---|---|---|---|---|---|
| h. | Mic. Div. | Mic. Div. | Mic. Div. | Mic. Div. | Mic. Div. | Mic. Div. | Mic. Div. | Mic. Div. | Mic. Div. | Mic. Div. | Mic. Div. | Mic. Div. | Mic. Div. |
| 12 | 781·2 | 745·9 | 733·1 | 735·2 | 703·5 | 676·3 | 652·6 | 630·4 | 621·6 | 610·4 | 612·9 | 600·9 | 675·3 |
| 13 | 782·1 | 745·9 | 731·2 | 735·2 | 704·0 | 678·1 | 650·1 | 628·9 | 621·7 | 608·4 | 610·7 | 600·0 | 674·7 |
| 14 | 781·0 | 748·2 | 731·9 | 736·1 | 704·3 | 680·1 | 648·1 | 630·7 | 623·0 | 609·9 | 608·3 | 599·1 | 675·1 |
| 15 | 777·0 | 748·4 | 732·7 | 738·3 | 704·9 | 682·9 | 653·7 | 632·9 | 621·3 | 610·3 | 608·5 | 598·8 | 675·8 |
| 16 | 777·5 | 749·2 | 731·1 | 737·7 | 708·0 | 685·9 | 654·3 | 636·2 | 618·5 | 610·1 | 609·4 | 597·1 | 676·3 |
| 17 | 777·5 | 746·5 | 730·9 | 739·7 | 708·1 | 691·3 | 656·3 | 640·7 | 624·9 | 610·5 | 609·6 | 596·2 | 677·7 |
| 18 | 775·7 | 745·3 | 732·2 | 746·6 | 707·4 | 692·7 | 662·7 | 641·3 | 631·2 | 611·9 | 608·8 | 595·9 | 679·3 |
| 19 | 776·1 | 742·9 | 735·8 | 741·6 | 704·9 | 695·8 | 663·9 | 644·0 | 633·9 | 615·7 | 609·4 | 595·8 | 680·0 |
| 20 | 779·5 | 744·5 | 739·1 | 748·7 | 705·6 | 694·0 | 663·4 | 643·9 | 636·1 | 619·7 | 611·9 | 599·6 | 682·2 |
| 21 | 783·3 | 740·5 | 738·7 | 751·5 | 701·1 | 682·6 | 658·6 | 639·6 | 633·1 | 619·4 | 615·1 | 598·7 | 680·2 |
| 22 | 783·1 | 740·8 | 732·9 | 742·2 | 697·2 | 676·5 | 656·7 | 633·1 | 629·3 | 615·4 | 614·2 | 598·3 | 676·6 |
| 23 | 787·0 | 740·0 | 729·4 | 736·0 | 695·6 | 670·0 | 645·3 | 626·1 | 622·6 | 612·9 | 613·4 | 599·4 | 673·1 |
| 0 | 786·7 | 744·2 | 728·7 | 725·3 | 698·0 | 676·6 | 643·3 | 620·7 | 618·3 | 611·6 | 611·8 | 599·5 | 672·1 |
| 1 | 786·9 | 747·3 | 730·0 | 727·2 | 702·8 | 676·0 | 647·5 | 623·8 | 621·8 | 612·4 | 613·1 | 599·3 | 674·0 |
| 2 | 789·3 | 748·3 | 733·0 | 735·1 | 708·0 | 679·4 | 650·9 | 631·3 | 628·2 | 615·8 | 616·8 | 602·5 | 678·2 |
| 3 | 788·2 | 752·1 | 737·2 | 739·0 | 708·6 | 685·2 | 652·8 | 634·2 | 631·2 | 619·0 | 620·7 | 603·8 | 681·0 |
| 4 | 786·3 | 753·7 | 742·7 | 742·8 | 710·8 | 691·4 | 657·3 | 637·5 | 632·4 | 618·2 | 622·7 | 602·9 | 683·2 |
| 5 | 785·2 | 747·4 | 741·7 | 740·9 | 711·9 | 691·5 | 660·2 | 638·4 | 634·8 | 614·7 | 621·4 | 602·8 | 682·6 |
| 6 | 785·4 | 745·6 | 736·7 | 740·6 | 709·4 | 692·7 | 661·0 | 638·0 | 632·0 | 613·3 | 625·5 | 603·0 | 681·9 |
| 7 | 785·6 | 747·3 | 733·7 | 740·1 | 712·5 | 691·1 | 661·3 | 635·8 | 631·4 | 613·2 | 625·1 | 601·8 | 681·6 |
| 8 | 787·1 | 743·6 | 733·2 | 735·0 | 714·4 | 689·4 | 660·9 | 635·4 | 630·2 | 613·1 | 623·7 | 601·8 | 680·6 |
| 9 | 792·6 | 743·6 | 733·3 | 737·3 | 711·5 | 689·2 | 655·8 | 633·2 | 622·0 | 609·1 | 622·6 | 602·9 | 679·4 |
| 10 | 790·1 | 744·4 | 734·8 | 734·7 | 709·0 | 683·4 | 655·9 | 631·3 | 621·3 | 608·0 | 620·0 | 604·1 | 678·1 |
| 11 | 786·3 | 744·2 | 734·0 | 733·9 | 705·0 | 681·6 | 651·5 | 630·3 | 618·7 | 606·2 | 615·6 | 602·5 | 675·8 |

These Tables give very remarkable results, the means for the 10 days and for the 5 days selected agree very nearly with each other, but they differ very considerably in some cases from the means of the whole observations. Considering at first the mean of the 60 days representing the mean for the year, free or nearly free from intermittent disturbances, we find that the diurnal variation consists of two nearly equal maxima and two nearly equal minima; the principal of the former occurs at $4^h\ 10^m$ P.M. and the other at $8^h\ 10^m$ A.M., while the principal minimum occurs at noon and the secondary minimum at $1^h\ 10^m$ A.M. The mean for the 120 days differs from that for the 60 days, only in placing the principal maximum an hour later, namely, at $5^h\ 10^m$ P.M. The effect of the intermittent disturbances therefore is nearly to efface what is really the principal minimum and to exaggerate what is only a secondary minimum; the range of the mean diurnal variation when freed from the effect of disturbances is little more than *a fourth* of that obtained from the whole series of observations. When the non-disturbed variations for the different months are examined, it is at once apparent that the matters which have been noted as remarkable in the total results are chiefly or altogether due to disturbances; in fact, the diurnal variation consists in the eight months from March till October of two maxima and two minima, and resembles generally the result for the year, the earlier maximum being at times the principal. The variation in the four winter months differs somewhat from that for the other months, being more like a single variation; there are, however, some differences which may be accidental, but which will be considered in connection with the observations for 1845. The following Table contains the approximate epochs of the singular points for each month, the principal are indicated by + and −

TABLE XLVI.—Epochs of Diurnal Maxima and Minima of the Vertical Component of Magnetic Force, obtained from the selected series of observations, 1844.

| Month. | 10-Day Series. | | | | 5-Day Series. | | | |
|---|---|---|---|---|---|---|---|---|
| | Min. | Max. | Min. | Max. | Min. | Max. | Min. | Max. |
| | h. m. | h. m. | h. m. | h. m. | h. m. | h. m. | h. m. | h. m. |
| Jan. | − 6·10 A.M. | 2·10 P.M. | 6·10 P.M. | +9·10 P.M. | − 6·40 A.M. | 2·10 P.M. | 5·40 P.M. | + 9·10 P.M. |
| Feb. | −10·10 ... | +4·10 ... | 6·30 ...<br>11·10 ... | 9·10 ...<br>3·0 A.M. | −11·10 ... | +4·10 ... | 9·0 ... | 4·10 A.M. |
| March | 0·10 P.M. | +5·10 ... | − 1·10 A.M. | 8·10 ... | − 0·10 P.M. | +4·20 ... | 3·10 A.M. | 8·20 ... |
| April | − 0·10 ... | 5·40 ... | 1·10 ... | +8·40 ... | − 0·20 ... | 4·10 ... | 11·10 P.M. | + 9·10 ... |
| May | 0·10 ... | +8·0 ... | −12·10 ... | 7·10 ... | −11·10 A.M. | +8·10 ... | 12·10 ... | 4·40 ... |
| June | − 0·10 ... | +6·10 ... | 1·10 ... | +7·40 ... | −11·10 ... | 6·10 ... | 12·10 ... | + 7·10 ... |
| July | − 0·10 ... | 6·40 ... | 1·10 ... | +6·30 ... | − 0·10 P.M. | 7·10 ... | 2·10 A.M. | + 7·40 ... |
| Aug. | − 0·10 ... | 4·40 ... | 1·10 ... | 7·10 ... | − 0·10 ... | 5·30 ... | 1·10 ... | + 7·40 ... |
| Sept. | 0·10 ... | +5·10 ... | −11·50 P.M. | 8·10 ... | − 0·10 ... | 5·10 ... | −2·10 ... | + 8·10 ... |
| Oct. | − 0·10 ... | +4·10 ... | −11·10 ... | 9·0 ... | 0·10 ... | +3·40 ... | 11·10 P.M. | + 8·40 ... |
| Nov. | − 3·0 A.M. | +3·10 ... | 6·0 ... | 8·30 P.M. | 0·10 ... | +6·30 ... | −3·10 A.M. | 9·10 ... |
| Dec. | − 6·10 ... | +3·40 ... | 7·10 ... | 9·10 ... | − 6·40 A.M. | 3·10 ... | 6·40 P.M. | +10·10 P.M. |

The principal maximum is indicated by + and the principal minimum by − ; the differences, however, between the values of the principal and secondary points are small, excepting perhaps for the months of December, January, and February. The epochs for the 10-day series are the most consistent, 5 days are probably too few for consistent results, especially in the present case, where the days were selected chiefly as being free from irregularities for the magnetic declination.

*Ranges of the Mean Diurnal Variations.*—The following are the ranges of the monthly mean diurnal variations, as deduced from all the hourly observations, and from the hourly observations on the 10 days and on the 5 days selected as least affected by disturbances :—

| | | Jan. | Feb. | March. | April. | May. | June. | July. | Aug. | Sept. | Oct. | Nov. | Dec. | Year. |
|---|---|---|---|---|---|---|---|---|---|---|---|---|---|---|
| All, . | 0·000 | 271 | 273 | 688 | 705 | 516 | 233 | 298 | 587 | 616 | 702 | 588 | 292 | 419 |
| 10 days, | 0·000 | 137 | 124 | 222 | 201 | 201 | 211 | 204 | 194 | 229 | 159 | 140 | 084 | 124 |
| 5 days, | 0·000 | 169 | 137 | 140 | 262 | 188 | 258 | 206 | 233 | 177 | 135 | 171 | 083 | 111 |

The range of the diurnal variation from *all* the observations is a minimum at the solstices, and it is a maximum at the equinoxes, being three times greater at the latter than at the summer solstice. When we consider the range of the diurnal variation nearly unaffected by intermittent disturbances, as deduced from 10 days selected, we find a totally different result, as in the case of the other elements discussed the diurnal range has a nearly constant value during the months for which the sun is north of the equator. The excess, therefore, of the range at the equinoxes from all the observations, is due solely to disturbances, which, as has been shewn in the previous discussions, are a maximum at these epochs. The ranges from the 5 days selected are perhaps less accurate, owing to the fewness of the observations from which they are obtained.

**TABLE XLVII.—Mean Variations of the Vertical Component of Magnetic Force, with reference to the Moon's Hour-Angle for each Lunation, for the Six Winter and Six Summer Lunations, and for the Twelve Lunations, of 1844.**

| Moon's Hour-Angle. | Lunations. | | | | | | | | | | | | | | |
|---|---|---|---|---|---|---|---|---|---|---|---|---|---|---|---|
| | 1st. | 2d. | 3d. | 4th. | 5th. | 6th. | 7th. | 8th. | 9th. | 10th. | 11th. | 12th. | Winter. | Summer. | Year. |
| h. | 0·00 | 0·00 | 0·00 | 0·00 | 0·00 | 0·00 | 0·00 | 0·00 | 0·00 | 0·00 | 0·00 | 0·00 | 0·00 | 0·00 | 0·00 |
| 0 | 0061 | 0004 | 0139 | 0282 | 0035 | 0126 | 0055 | 0089 | 0048 | 0117 | 0079 | 0047 | 0025 | 0062 | 0035 |
| 1 | 0096 | 0029 | 0057 | 0130 | 0060 | 0140 | 0045 | 0071 | 0004 | 0000 | 0095 | 0069 | 0008 | 0031 | 0011 |
| 2 | 0065 | 0057 | 0031 | 0078 | 0087 | 0127 | 0026 | 0069 | 0009 | 0002 | 0043 | 0129 | 0005 | 0022 | 0005 |
| 3 | 0053 | 0084 | 0035 | 0085 | 0106 | 0128 | 0017 | 0060 | 0000 | 0054 | 0000 | 0071 | 0000 | 0022 | 0003 |
| 4 | 0052 | 0097 | 0000 | 0020 | 0110 | 0126 | 0043 | 0065 | 0004 | 0135 | 0020 | 0058 | 0011 | 0018 | 0006 |
| 5 | 0034 | 0119 | 0080 | 0000 | 0094 | 0119 | 0081 | 0038 | 0026 | 0173 | 0023 | 0028 | 0027 | 0016 | 0013 |
| 6 | 0028 | 0105 | 0045 | 0037 | 0081 | 0080 | 0078 | 0018 | 0042 | 0204 | 0050 | 0011 | 0024 | 0012 | 0010 |
| 7 | 0005 | 0038 | 0103 | 0082 | 0078 | 0061 | 0062 | 0000 | 0019 | 0128 | 0080 | 0006 | 0010 | 0007 | 0000 |
| 8 | 0027 | 0046 | 0170 | 0067 | 0000 | 0055 | 0071 | 0033 | 0035 | 0123 | 0069 | 0005 | 0024 | 0000 | 0003 |
| 9 | 0019 | 0075 | 0166 | 0058 | 0042 | 0043 | 0062 | 0046 | 0014 | 0172 | 0083 | 0000 | 0036 | 0001 | 0010 |
| 10 | 0024 | 0090 | 0195 | 0035 | 0085 | 0075 | 0072 | 0081 | 0033 | 0235 | 0110 | 0022 | 0063 | 0020 | 0033 |
| 11 | 0038 | 0127 | 0286 | 0054 | 0110 | 0070 | 0045 | 0095 | 0040 | 0298 | 0103 | 0047 | 0100 | 0025 | 0054 |
| 12 | 0016 | 0132 | 0346 | 0047 | 0071 | 0055 | 0005 | 0090 | 0063 | 0396 | 0124 | 0078 | 0132 | 0012 | 0063 |
| 13 | 0000 | 0163 | 0438 | 0065 | 0090 | 0000 | 0000 | 0106 | 0088 | 0424 | 0152 | 0097 | 0163 | 0015 | 0080 |
| 14 | 0020 | 0159 | 0460 | 0101 | 0119 | 0038 | 0033 | 0077 | 0112 | 0541 | 0176 | 0106 | 0194 | 0036 | 0107 |
| 15 | 0056 | 0172 | 0489 | 0109 | 0101 | 0045 | 0054 | 0101 | 0098 | 0475 | 0196 | 0093 | 0197 | 0041 | 0111 |
| 16 | 0056 | 0182 | 0435 | 0144 | 0078 | 0043 | 0071 | 0144 | 0173 | 0509 | 0177 | 0084 | 0191 | 0065 | 0119 |
| 17 | 0062 | 0169 | 0426 | 0185 | 0049 | 0040 | 0075 | 0150 | 0220 | 0458 | 0163 | 0064 | 0174 | 0076 | 0117 |
| 18 | 0085 | 0080 | 0298 | 0092 | 0063 | 0019 | 0084 | 0140 | 0223 | 0334 | 0159 | 0078 | 0123 | 0060 | 0083 |
| 19 | 0100 | 0109 | 0325 | 0073 | 0037 | 0030 | 0082 | 0053 | 0210 | 0338 | 0254 | 0078 | 0151 | 0037 | 0086 |
| 20 | 0089 | 0078 | 0231 | 0083 | 0033 | 0033 | 0075 | 0045 | 0201 | 0318 | 0258 | 0071 | 0125 | 0035 | 0071 |
| 21 | 0089 | 0085 | 0246 | 0134 | 0065 | 0038 | 0059 | 0049 | 0168 | 0310 | 0337 | 0059 | 0138 | 0042 | 0081 |
| 22 | 0091 | 0019 | 0176 | 0165 | 0046 | 0050 | 0070 | 0067 | 0138 | 0286 | 0334 | 0060 | 0111 | 0046 | 0070 |
| 23 | 0084 | 0000 | 0130 | 0120 | 0082 | 0075 | 0060 | 0111 | 0097 | 0046 | 0327 | 0061 | 0058 | 0047 | 0044 |
| 24 | 0056 | 0009 | 0135 | 0150 | 0078 | 0100 | 0055 | 0127 | 0049 | 0101 | 0351 | 0055 | 0068 | 0050 | 0050 |

*Diurnal Variation with reference to the Moon's Hour-Angle.*—Considering the variations for the six winter lunations, the six summer lunations, and for the year, as given in the last three columns of Table XLVII.

In the winter group, the maximum of the vertical component occurs about 2½ hours after the moon's transit of the inferior meridian, and the minimum about 3 hours after its transit of the superior meridian.

In the summer group, there are two maxima and two minima; the principal minimum occurs 4 hours before the moon's inferior transit, and the principal maximum occurs 4¼ hours after the inferior transit; a secondary minimum occurs about 4½ hours before the superior transit, and a secondary maximum at the superior transit.

In the mean of the 12 lunations in 1844, the maximum occurs 3½ hours after the inferior transit, and the minimum occurs 7 hours after the superior transit. There is a secondary maximum immediately before this epoch, but it is not well marked. The remarks already made for the similar discussion of the horizontal component also apply here. In order to eliminate the effect of disturbances, those observations were rejected in the summations, which were considerably disturbed, differing from the monthly means at the corresponding hours by more than 50 micrometer divisions (=0·000500), quantities interpolated from the preceding and succeeding observations having been substituted. The following are the resulting variations at intervals of $\frac{2}{25}$ of an hour:—

| | 0 | 1 | 2 | 3 | 4 | 5 | 6 | 7 | 8 | 9 | 10 | 11 | 12 | 13 | 14 | 15 | 16 | 17 | 18 | 19 | 20 | 21 | 22 | 23 | 24 |
|---|---|---|---|---|---|---|---|---|---|---|---|---|---|---|---|---|---|---|---|---|---|---|---|---|---|
| 0·0000 | 37 | 31 | 29 | 22 | 17 | 20 | 06 | 00 | 04 | 12 | 24 | 32 | 47 | 59 | 73 | 77 | 83 | 70 | 58 | 43 | 40 | 39 | 34 | 39 | 36 |

The maximum occurs about 2 hours after the moon's passage of the inferior meridian, and the minimum 7 hours after the superior transit; there is an ill-defined minimum about 3 hours before the superior transit, and maximum at the superior transit.

TABLE XLVIII.—Differences between the Hourly Means of Balance Micrometer Readings for the whole series in each Month, and those for the selected Ten Days; or Table XLII. *minus* Table XLIV.

| Mak. M. T. | Jan. | Feb. | March. | April. | May. | June. | July. | Aug. | Sept. | Oct. | Nov. | Dec. | Year. |
|---|---|---|---|---|---|---|---|---|---|---|---|---|---|
| h. | Mic. Div. | Mic. Div. | Mic. Div. | Mic. Div. | Mic. Div. | Mic. Div. | Mic. Div. | Mic. Div. | Mic. Div. | Mic. Div. | Mic. Div. | Mic. Div. | Mic. Div. |
| 12 | −1·8 | − 7·0 | −18·9 | −28·0 | −15·7 | −0·9 | − 3·2 | −19·6 | −16·0 | −16·7 | −16·6 | − 4·8 | −12·5 |
| 13 | +0·2 | − 7·7 | −22·1 | −17·4 | −16·0 | −5·1 | − 6·1 | −16·6 | −14·4 | −18·0 | −15·5 | − 1·3 | −11·7 |
| 14 | −2·0 | − 9·1 | −29·0 | −18·4 | −19·7 | −4·7 | − 4·5 | −20·9 | −16·1 | −21·8 | − 9·9 | − 6·5 | −13·6 |
| 15 | −3·7 | −10·8 | −22·8 | −23·2 | −18·0 | −2·9 | − 4·3 | −14·3 | −19·8 | −26·0 | −10·0 | − 7·0 | −13·6 |
| 16 | −7·2 | − 9·3 | −15·8 | −25·3 | −17·4 | −2·0 | − 3·2 | −10·5 | −15·5 | −35·8 | − 9·9 | − 7·9 | −13·3 |
| 17 | −9·4 | − 9·4 | −18·1 | −25·7 | −13·0 | −2·6 | − 1·5 | − 8·6 | −14·7 | −26·4 | − 9·0 | − 8·3 | −12·2 |
| 18 | −6·9 | − 6·5 | −14·4 | −21·0 | − 7·8 | −2·6 | − 8·0 | − 9·7 | −12·9 | −16·8 | − 8·0 | − 6·1 | −10·0 |
| 19 | −4·9 | − 3·0 | − 5·7 | −10·0 | − 3·5 | −2·8 | − 8·1 | − 7·2 | − 9·0 | − 9·2 | − 6·8 | − 4·0 | − 6·3 |
| 20 | −3·8 | − 2·8 | − 0·2 | − 6·9 | − 1·3 | −2·4 | − 7·9 | − 5·0 | − 7·2 | − 4·3 | − 6·0 | − 4·5 | − 4·4 |
| 21 | −3·0 | − 0·2 | + 2·8 | − 5·1 | + 2·0 | −0·8 | − 6·7 | − 3·9 | − 2·9 | + 1·3 | − 6·7 | − 4·5 | − 2·3 |
| 22 | −2·4 | + 0·5 | + 7·6 | − 2·6 | + 2·6 | −0·8 | − 5·2 | − 1·9 | + 1·1 | + 7·7 | − 4·8 | − 3·8 | − 0·1 |
| 23 | −2·1 | + 3·7 | +13·0 | + 5·9 | + 4·8 | +0·5 | − 2·6 | 0·0 | + 4·0 | +10·9 | − 1·5 | − 2·5 | + 2·9 |
| 0 | +0·8 | + 2·8 | +13·3 | +20·9 | + 6·4 | −1·1 | − 0·7 | + 2·9 | + 5·7 | +20·3 | + 7·6 | − 1·4 | + 6·5 |
| 1 | +4·2 | + 2·2 | +17·4 | +13·4 | + 4·3 | +3·0 | + 1·2 | + 6·0 | + 7·1 | +19·0 | + 7·5 | + 0·4 | + 7·1 |
| 2 | +5·4 | + 4·2 | +25·4 | +13·4 | + 4·7 | +1·9 | + 3·7 | + 7·4 | + 7·9 | +21·2 | + 7·8 | + 2·8 | + 8·9 |
| 3 | +6·6 | + 6·2 | +25·7 | +21·1 | + 8·1 | +4·0 | + 7·9 | +13·9 | +16·6 | +24·1 | +18·1 | + 6·4 | +13·2 |
| 4 | +6·1 | + 9·5 | +18·5 | +20·2 | +11·9 | +4·4 | +11·8 | +16·3 | +22·7 | +20·0 | +29·4 | + 7·6 | +14·8 |
| 5 | +8·5 | +12·8 | +20·7 | +28·9 | +16·9 | +3·2 | +12·4 | +21·1 | +22·9 | +22·5 | +31·4 | + 9·1 | +17·5 |
| 6 | +9·1 | +15·8 | +24·1 | +31·6 | +16·8 | +3·1 | + 7·4 | +24·2 | +20·4 | +16·4 | +25·6 | +15·7 | +17·5 |
| 7 | +9·0 | +11·5 | +19·3 | +25·0 | +14·6 | +3·5 | + 9·0 | +21·8 | +13·8 | +18·7 | +14·5 | +11·5 | +14·3 |
| 8 | +4·6 | +10·4 | +10·0 | +14·8 | +12·2 | +5·2 | + 5·5 | +17·3 | + 6·7 | + 6·9 | + 1·1 | + 7·1 | + 8·5 |
| 9 | +0·9 | − 2·0 | − 8·8 | + 3·5 | + 8·6 | +2·0 | + 4·1 | + 6·9 | + 3·1 | − 0·7 | − 6·7 | + 3·3 | + 1·2 |
| 10 | −4·7 | − 1·5 | −26·6 | − 3·5 | + 1·3 | −0·6 | + 0·4 | − 2·9 | − 0·3 | − 8·1 | −14·8 | + 0·7 | − 5·1 |
| 11 | −3·3 | − 9·9 | −15·4 | −11·6 | − 3·0 | −1·4 | − 1·1 | −16·7 | − 3·0 | − 5·0 | −16·6 | − 1·6 | − 7·4 |

TABLE XLIX.—Differences between the Hourly Means of Balance Micrometer Readings for the whole series in each Month, and those for the selected Five Days; or Table XLII. *minus* Table XLV.

| Mak. M. T. | Jan. | Feb. | March. | April. | May. | June. | July. | Aug. | Sept. | Oct. | Nov. | Dec. | Year. |
|---|---|---|---|---|---|---|---|---|---|---|---|---|---|
| h. | Mic. Div. | Mic. Div. | Mic. Div. | Mic. Div. | Mic. Div. | Mic. Div. | Mic. Div. | Mic. Div. | Mic. Div. | Mic. Div. | Mic. Div. | Mic. Div. | Mic. Div. |
| 12 | − 2·1 | − 6·2 | −23·7 | −30·4 | −23·2 | +4·7 | − 4·8 | −23·7 | −22·3 | −16·3 | −19·7 | − 7·3 | −14·6 |
| 13 | − 0·3 | − 7·3 | −26·6 | −22·8 | −22·1 | −1·9 | − 5·3 | −19·9 | −19·7 | −17·2 | −16·5 | − 3·8 | −13·6 |
| 14 | − 1·6 | − 9·4 | −31·1 | −20·4 | −23·7 | −3·3 | − 2·8 | −24·4 | −19·8 | −23·2 | − 9·2 | − 8·0 | −14·8 |
| 15 | − 1·7 | −11·6 | −25·2 | −24·4 | −20·1 | −0·8 | − 4·1 | −16·8 | −19·6 | −27·9 | − 9·2 | − 8·1 | −14·1 |
| 16 | − 6·9 | −10·9 | −19·1 | −25·9 | −19·8 | −1·8 | + 0·1 | −11·5 | −12·8 | −36·9 | − 9·7 | − 7·5 | −13·6 |
| 17 | − 9·0 | − 9·5 | −20·5 | −26·9 | −13·2 | −4·3 | + 1·0 | − 9·6 | −14·7 | −27·8 | − 9·0 | − 7·1 | −12·6 |
| 18 | − 5·5 | − 7·0 | −16·9 | −23·3 | − 5·7 | −3·7 | − 6·1 | −10·4 | −15·8 | −19·1 | − 6·8 | − 5·9 | −10·5 |
| 19 | − 4·0 | − 3·7 | − 7·2 | − 8·3 | + 0·6 | −5·3 | − 8·0 | − 8·4 | −11·6 | −11·4 | − 5·6 | − 3·2 | − 6·4 |
| 20 | − 3·0 | − 5·5 | − 1·5 | − 9·6 | + 2·8 | −3·3 | −10·2 | − 6·6 | − 9·0 | − 7·2 | − 6·4 | − 4·7 | − 5·4 |
| 21 | − 3·9 | − 0·8 | + 0·9 | −10·3 | + 6·6 | +2·9 | − 7·4 | − 5·4 | − 2·7 | − 0·8 | − 7·3 | − 3·6 | − 2·7 |
| 22 | − 1·1 | − 0·7 | + 5·8 | − 3·2 | + 5·6 | +3·1 | − 6·8 | − 2·3 | + 0·9 | + 6·4 | − 4·7 | − 2·8 | + 0·1 |
| 23 | − 2·0 | + 3·3 | +12·5 | + 5·3 | + 6·3 | +3·1 | − 1·0 | + 0·9 | + 3·9 | + 9·2 | + 0·6 | − 2·0 | + 3·4 |
| 0 | + 0·2 | + 1·4 | +12·6 | +21·8 | + 4·5 | −3·1 | + 0·3 | + 5·7 | + 8·0 | +18·7 | +11·1 | − 0·4 | + 6·7 |
| 1 | + 3·3 | + 0·8 | +17·2 | +17·5 | + 2·8 | −0·8 | − 1·0 | + 8·7 | +10·5 | +18·0 | +12·0 | + 2·2 | + 7·6 |
| 2 | + 4·3 | + 3·2 | +25·6 | +16·9 | + 1·7 | −0·5 | − 0·9 | + 9·2 | +11·6 | +20·0 | +11·8 | + 3·2 | + 8·9 |
| 3 | + 6·0 | + 4·4 | +25·5 | +21·2 | + 8 1 | −0·5 | + 7·4 | +16·7 | +20·1 | +24·4 | +20·4 | + 7·1 | +13·4 |
| 4 | + 6·3 | + 7·8 | +22·0 | +19·1 | +13·3 | +1·2 | +12·4 | +20·3 | +26·8 | +23·5 | +29·3 | + 8·8 | +15·9 |
| 5 | + 9·5 | +13·6 | +27·9 | +31·4 | +20·0 | +3·1 | +13·2 | +24·3 | +26·1 | +27·0 | +30·3 | + 9·3 | +19·6 |
| 6 | + 9·5 | +16·5 | +31·9 | +34·7 | +21·8 | +3·7 | + 8·2 | +27·0 | +21·9 | +19·9 | +21·4 | +15·3 | +19·3 |
| 7 | +10·0 | +11·9 | +25·3 | +27·3 | +17·6 | +3·7 | + 9·3 | +23·0 | +13·5 | +21·4 | +10·3 | +11·8 | +15·4 |
| 8 | + 6·6 | +13·1 | +15·1 | +18·7 | +13·9 | +4·5 | + 6·2 | +17·6 | + 6·8 | + 9·2 | − 0·5 | + 8·1 | +10·0 |
| 9 | − 1·0 | + 3·9 | − 2·5 | + 5·3 | + 9·1 | +0·7 | + 4·2 | + 7·0 | + 5·5 | + 0·8 | − 7·8 | + 3·5 | + 2·4 |
| 10 | − 7·9 | + 2·6 | −28·3 | − 2·4 | − 0·4 | −0·5 | − 1·2 | − 3·6 | − 0·7 | − 5·3 | −17·0 | − 0·5 | − 5·5 |
| 11 | − 5·7 | − 9·4 | −19·7 | −11·6 | − 6·5 | −0·8 | − 2·6 | −17·8 | − 6·6 | − 5·4 | −17·8 | − 4·3 | − 9·0 |

## INTERMITTENT DISTURBANCES.

*Effect of Intermittent Disturbances on the Yearly Mean of the Vertical Component.*—Performing discussions similar to those already made for the magnetic declination and horizontal component, we find the means of the vertical component as deduced from different series of days as follow, the value at 0 micrometer divisions being unity:—

| | |
|---|---|
| Mean vertical component for 1844, as deduced from the 120 days, greater than that from the whole series by | 0·000021 |
| ..... 60 ..... | 0·000015 |

The effect of disturbances, therefore, in 1844, was to diminish the mean value of the vertical component, as well as of the horizontal component.

*Effect of Disturbances on the Monthly Means of the Vertical Component.*—The corrections of the means from the 10-day and 5-day series selected in each month, to those from the complete series, are, in micrometer divisions, as follow:—

| | Jan. | Feb. | March. | April. | May. | June. | July. | Aug. | Sept. | Oct. | Nov. | Dec. |
|---|---|---|---|---|---|---|---|---|---|---|---|---|
| 10 days, | −3·9 | +9·6 | −12·4 | +0·3 | −7·1 | − 3·1 | −3·1 | −2·0 | −4·8 | −4·3 | +0·6 | +5·1 |
| 5 days, | −2·4 | +10·5 | −12·1 | −1·1 | −3·4 | −10·6 | −3·1 | −0·1 | −2·6 | −2·3 | +0·8 | +7·2 |

These quantities oscillate considerably; taking the mean of each three in order to eliminate the irregularities, we have—

| | | | | | | | | | | | | |
|---|---|---|---|---|---|---|---|---|---|---|---|---|
| 10 days, | +3·6 | −2·2 | −0·8 | −6·4 | −3·3 | −4·4 | −2·8 | −3·3 | −3·7 | −2·8 | +0·5 | +1·9 |
| 5 days | +5·1 | −1·3 | −0·9 | −5·5 | −5·0 | −5·7 | −4·6 | −2·0 | −1·7 | −1·4 | +1·9 | +1·9 |

From whence it appears, that the maximum effect of disturbances, to diminish the monthly mean, occurs about May, and the maximum effect, to increase the monthly mean, about January. The differences of the means from the selected and complete series, are evidently partially due to the secular change, the means of the selected series not corresponding to the middle of the month; the error due to this cause, however, does not affect the above result to any marked extent.

*Effect of Disturbances on the Hourly Means of the Vertical Component.*—Considering, first, the differences of the hourly means for the year, as obtained from a comparison of the whole series with the 60-day series of observations (see last column of Table XLIX.), we obtain the following results:—

The mean effect of disturbances upon the hourly means of the vertical component, is a positive maximum at $5^h\ 30^m$ P.M.; it is a negative maximum about $2^h$ A.M., and it is zero at $10^h$ A.M., and near $10^h$ P.M. The comparison of the whole series with the 120-day series (see last column of Table XLVIII.) gives exactly the same result.

The times for the maximum effect of disturbance on the hourly means of the vertical component, are about $1\frac{1}{2}$ hours after those for the horizontal component.

The greatest effects of disturbance in increasing and diminishing the hourly means of the vertical component for the year 1844, as deduced from the comparisons with the 60-day series of observations, are as follow:—

| | |
|---|---|
| Maximum effect in increasing the vertical component ($5^h\ 30^m$ P.M.)..... | =0·000196 |
| ..... diminishing ..... ($2^h$ A.M.)..... | =0·000148 |

As the whole diurnal range in the mean for the year from the whole series of observations is 0·000419, the effect of disturbance is greater on this component than on either of the other elements already discussed, being from about $+\frac{1}{2}$ to $-\frac{1}{3}$ of the whole range.

The differences for each month from both series of comparisons, give, with slight variation, the same times of maximum and minimum effect, the amount being greatest at the equinoxes.

The following are the differences between the hourly means for the 120-day series, and those for the 60-day series, or means for 120 days *minus* means for 60 days. (See last columns of Tables XLIV. and XLV.)

| 12h | 1h A.M. | 2h | 3h | 4h | 5h | 6h | 7h | 8h | 9h | 10h | 11h | 0h | 1h P.M. | 2h | 3h | 4h | 5h | 6h | 7h | 8h | 9h | 10h | 11h |
|---|---|---|---|---|---|---|---|---|---|---|---|---|---|---|---|---|---|---|---|---|---|---|---|
| −2·1 | −1·9 | −1·2 | −0·5 | −0·3 | −0·4 | −0·5 | −0·1 | −1·0 | −0·4 | +0·2 | +0·5 | +0·2 | +0·5 | 0·0 | +0·2 | +1·1 | +2·1 | +1·8 | +1·1 | +1·5 | +1·2 | −0·4 | −1·6 |

These differences give the same law as the differences discussed above. The maximum positive effect occurs about $5\frac{1}{2}^h$ P.M., and the maximum negative about $1^h$ A.M.; whence, as in the analogous discussions for the magnetic declination and horizontal component, we may conclude that the smallest and largest disturbances obey the same diurnal law. (See pp. 345 and 368.)

*Differences of the Individual Observations from the Monthly Means for the Corresponding Hours.*—Adopting the process already indicated for the magnetic declination, p. 346, we obtain the following Table:—

TABLE L.—Mean Difference of a Single Observation of the Balance Magnetometer from the Monthly Mean, at the corresponding hour, for each Civil Day and Week in 1844.

| Civil Day. | Jan. | Feb. | March. | April. | May. | June. | July. | Aug. | Sept. | Oct. | Nov. | Dec. |
|---|---|---|---|---|---|---|---|---|---|---|---|---|
| | Mic. Div. | Mic. Div. | Mic. Div. | Mic. Div. | Mic. Div. | Mic. Div. | Mic. Div. | Mic. Div. | Mic. Div. | Mic. Div. | Mic. Div. | Mic. Div. |
| 1 | 15·6 | 32·6 | 24·3 | 24·9 | 23·1 | 6·6 | 6·5 | 31·5 | [18·9] | 132·9 | 13·2 | [12·4] |
| 2 | 17·7 | 30·5 | 40·5 | 30·6 | 15·4 | [15·1] | 11·2 | 19·2 | 14·5 | 35·2 | 14·5 | 9·2 |
| 3 | 12·6 | 19·2 | [32·6] | 19·3 | 27·0 | 19·6 | 9·5 | 18·4 | 13·1 | 21·8 | [14·5] | 7·7 |
| 4 | 12·1 | [23·0] | 24·2 | 12·9 | 33·0 | 14·6 | 11·6 | [17·9] | 14·9 | 21·8 | 13·0 | 11·5 |
| 5 | 18·2 | 23·5 | 28·2 | 9·4 | [23·9] | 18·2 | 10·6 | 9·9 | 10·9 | 21·4 | 12·5 | 11·3 |
| 6 | 10·6 | 18·7 | 55·9 | 29·9 | 18·9 | 14·6 | 8·6 | 11·1 | 16·9 | [19·3] | 14·7 | 5·4 |
| 7 | [12·8] | 13·3 | 50·5 | [18·1] | 21·0 | 13·9 | [14·1] | 17·2 | 18·2 | 19·1 | 16·4 | 6·7 |
| 8 | 14·0 | 22·5 | 35·5 | 19·8 | 28·2 | 11·0 | 23·7 | 17·2 | [16·0] | 14·3 | 17·9 | [8·2] |
| 9 | 11·3 | 12·5 | 17·4 | 18·3 | 29·6 | [10·5] | 16·5 | 34·0 | 17·2 | 17·6 | 10·9 | 7·5 |
| 10 | 10·9 | 11·7 | [27·7] | 18·2 | 20·6 | 5·5 | 13·5 | 10·1 | 14·1 | 19·7 | [15·2] | 7·9 |
| 11 | 8·3 | [11·6] | 18·5 | 12·0 | 28·8 | 12·7 | 12·2 | [16·5] | 19·0 | 18·7 | 20·5 | 10·6 |
| 12 | 7·2 | 7·1 | 26·4 | 14·9 | [23·2] | 5·2 | 6·6 | 10·7 | 14·5 | 16·3 | 14·0 | 14·7 |
| 13 | 7·5 | 5·8 | 17·8 | 25·2 | 16·2 | 8·6 | 11·5 | 14·5 | 14·0 | [17·0] | 11·5 | 12·8 |
| 14 | [7·9] | 10·0 | 24·7 | [32·3] | 12·5 | 6·6 | [11·1] | 12·3 | 9·1 | 17·9 | 9·5 | 34·9 |
| 15 | 9·3 | 24·0 | 20·0 | 16·8 | 31·8 | 16·7 | 13·4 | 16·0 | [12·7] | 13·6 | 14·4 | [14·8] |
| 16 | 7·4 | 14·5 | 25·0 | 15·3 | 9·7 | [11·2] | 12·0 | 12·7 | 15·3 | 15·7 | 97·2 | 12·4 |
| 17 | 7·7 | 23·2 | [21·3] | 109·8 | 11·1 | 13·0 | 10·7 | 8·0 | 14·5 | 11·8 | [29·3] | 7·5 |
| 18 | 6·1 | [17·8] | 20·0 | 23·3 | 19·8 | 13·8 | 10·2 | [12·5] | 8·8 | 15·4 | 17·0 | 6·8 |
| 19 | 12·0 | 19·7 | 17·1 | 16·2 | [14·0] | 8·8 | 4·2 | 13·7 | 11·4 | 14·4 | 19·5 | 10·1 |
| 20 | 6·6 | 13·0 | 21·2 | 16·9 | 16·2 | 12·1 | 10·6 | 13·4 | 36·4 | [25·8] | 18·5 | 15·0 |
| 21 | [7·4] | 12·4 | 15·1 | [18·4] | 13·5 | 19·0 | [8·3] | 11·5 | 14·7 | 93·1 | 11·8 | 25·0 |
| 22 | 7·3 | 12·9 | 18·7 | 15·3 | 13·8 | 7·9 | 9·0 | 23·2 | [17·1] | 9·3 | 44·5 | [11·7] |
| 23 | 8·4 | 9·1 | 17·3 | 19·2 | 47·7 | [16·6] | 9·9 | 34·1 | 10·8 | 10·7 | 40·6 | 5·9 |
| 24 | 3·8 | 9·7 | [19·0] | 19·5 | 11·5 | 10·3 | 5·8 | 15·6 | 12·9 | 11·7 | [22·5] | 7·5 |
| 25 | 37·2 | [9·2] | 18·7 | 22·7 | 11·8 | 21·9 | 27·0 | [18·5] | 16·5 | 12·8 | 11·5 | 6·4 |
| 26 | 12·9 | 6·9 | 19·7 | 16·5 | [21·0] | 28·4 | 14·7 | 11·2 | 77·6 | 39·6 | 12·3 | 7·6 |
| 27 | ..... | 7·6 | 24·7 | 26·6 | 22·0 | 24·6 | 18·5 | 10·0 | 18·3 | [17·9] | 14·5 | 12·7 |
| 28 | [20·8] | 8·8 | 17·2 | [19·6] | 17·1 | 22·1 | [23·5] | 16·5 | 20·6 | 15·8 | 19·0 | 5·6 |
| 29 | 14·7 | 22·6 | 28·4 | 14·6 | 16·2 | 23·2 | 22·8 | 19·8 | [54·7] | 13·0 | 11·7 | [16·7] |
| 30 | 17·7 | | 137·4 | 13·9 | 16·4 | [16·2] | 22·9 | 33·9 | 43·5 | 14·2 | 15·0 | 33·3 |
| 31 | 21·5 | | [43·0] | | 15·1 | | 34·8 | 17·4 | | 18·9 | | 24·3 |

*Annual Variation of the Mean Difference for the Vertical Component.*—The average difference of an observation in each month, from the monthly mean at the corresponding hour, is as follows, in parts of the vertical component.

| | Jan. | Feb. | March. | April. | May. | June. | July. | Aug. | Sept. | Oct. | Nov. | Dec. |
|---|---|---|---|---|---|---|---|---|---|---|---|---|
| 0·000 | 123 | 157 | 294 | 224 | 203 | 144 | 137 | 172 | 191 | 247 | 199 | 123 |

These quantities give the same annual law as the similar discussions of the two other elements. The maximum disturbance of the vertical component occurs near the equinoxes, and the minimum near the solstices. The effect of disturbance is greatest on the means for this component; the amount of disturbance of the individual observations (independently of sign), is also much the greatest for the vertical component; the average difference of a single observation from the monthly mean for the corresponding hour is from $\frac{1}{2}$ to $\frac{1}{3}$ of the mean diurnal range as deduced from the whole series of observations for each month of the year.

The mean difference of an observation of the vertical component for the year 1844 = 0·000184.

TABLE LI.—Mean Difference of a Single Observation of the Balance Magnetometer from the Monthly Mean, at the corresponding hour, with reference to the Moon's Age, Declination, and Distance from the Earth, for 1844.

| Moon's Age. | Mean Difference. | Moon's Age. | Mean Difference. | After Moon farthest North. | Mean Difference. | After Moon farthest North. | Mean Difference. | Before and after Perigee. | Mean Difference. | Before and after Apogee. | Mean Difference. |
|---|---|---|---|---|---|---|---|---|---|---|---|
| Day. | Mic. Div. | Day. | Mic. Div. | Day. | Mic. Div. | Day. | Mic. Div. | Day. | Mic. Div. | Day. | Mic. Div. |
| 15 | 18·9 | 0 | 22·0 | 0 | 16·8 | 14 | 16·7 | 7 | 17·3 | 7 | 20·4 |
| 16 | 21·8 | 1 | 15·5 | 1 | 15·3 | 15 | 16·1 | 6 | 15·3 | 6 | 17·2 |
| 17 | 24·9 | 2 | 13·3 | 2 | 18·7 | 16 | 17·1 | 5 | 27·4 | 5 | 22·9 |
| 18 | 21·3 | 3 | 12·6 | 3 | 16·7 | 17 | 22·0 | 4 | 18·2 | 4 | 14·4 |
| 19 | 27·7 | 4 | 12·7 | 4 | 21·0 | 18 | 19·8 | 3 | 16·0 | 3 | 18·9 |
| 20 | 17·8 | 5 | 15·2 | 5 | 25·3 | 19 | 23·6 | 2 | 15·6 | 2 | 29·7 |
| 21 | 16·6 | 6 | 24·6 | 6 | 18·5 | 20 | 18·5 | 1 | 20·2 | 1 | 18·1 |
| 22 | 15·7 | 7 | 14·8 | 7 | 15·6 | 21 | 20·0 | P | 17·2 | A | 22·1 |
| 23 | 15·7 | 8 | 16·4 | 8 | 18·6 | 22 | 15·9 | 1 | 16·7 | 1 | 14·8 |
| 24 | 14·3 | 9 | 18·3 | 9 | 16·8 | 23 | 25·0 | 2 | 17·9 | 2 | 16·5 |
| 25 | 16·2 | 10 | 24·9 | 10 | 15·2 | 24 | 22·8 | 3 | 15·3 | 3 | 14·4 |
| 26 | 12·9 | 11 | 17·5 | 11 | 14·2 | 25 | 17·6 | 4 | 16·7 | 4 | 16·0 |
| 27 | 16·1 | 12 | 29·9 | 12 | 17·2 | 26 | 22·6 | 5 | 24·5 | 5 | 16·5 |
| 28 | 15·4 | 13 | 23·6 | 13 | 15·9 | 27 | 19·1 | 6 | 18·4 | 6 | 17·7 |
| 29 | 14·4 | 14 | 25·0 | | | | | 7 | 19·9 | 7 | 20·0 |

This Table has been formed from Table L., in the manner already described for Table II.

*Variation of the Mean Difference with respect to the Moon's Age.*—From the first portion of Table LI., it appears that the mean difference is a maximum about opposition, and a minimum about conjunction. The following are means of groups:—

| | Mic. Div. | | Mic. Div. |
|---|---|---|---|
| 14 days to 16 days, Full Moon, ..... | 21·9 | 29 days to 1 day, New Moon, ..... | 17·3 |
| 17 ..... 20 ..... | 22·9 | 2 ..... 5 days, | 13·4 |
| 21 ..... 24 ..... | 15·6 | 6 ..... 9 ..... | 18·5 |
| 25 ..... 28 ..... | 15·1 | 10 ..... 13 ..... | 24·0 |

The law is the same as that already found for the horizontal component; there is a secondary maximum at conjunction, minima occurring immediately before and after it; and there is a secondary minimum at opposition, the maxima occurring immediately before and after it: these secondary points are perhaps accidental.

The average difference for the 11 days (10 — 20), including Full Moon, . = 23·0 Mic. Div.
..... (25 — 5), ..... New Moon, . = 15·1 .....

*Variation of the Mean Difference with reference to the Moon's Declination.*—The average difference is a minimum when the moon has its greatest north and south declination, and it is a maximum between these epochs when the moon is near the equator. The following are means of groups:—

| | Mic. Div. | | Mic. Div. |
|---|---|---|---|
| 27 days to 1 day, Moon farthest North,... | 17·1 | 13 days to 15 days, Moon farthest South,... | 16·2 |
| 2 ..... 5 days, | 20·4 | 16 ..... 19 ..... | 20·6 |
| 6 ..... 8 ..... | 17·6 | 20 ..... 22 ..... | 18·1 |
| 9 .....12 ..... | 15·8 | 23 ..... 26 ..... | 22·0 |

These means still present some irregularities; the principal minimum occurs when the moon is farthest south.

TABLE LII.—Mean Difference of a Single Observation of the Balance Magnetometer from the Monthly Mean, at the corresponding hour, for each Hour in each Month of 1844.

| Mak. M. T. | Jan. | Feb. | March. | April. | May. | June. | July. | Aug. | Sept. | Oct. | Nov. | Dec. | Year. |
|---|---|---|---|---|---|---|---|---|---|---|---|---|---|
| h. | Mic. Div. | Mic. Div. | Mic. Div. | Mic. Div. | Mic. Div. | Mic. Div. | Mic. Div. | Mic. Div. | Mic. Div. | Mic. Div. | Mic. Div. | Mic. Div. | Mic. Div. |
| 12 | 13·6 | 12·6 | 46·5 | 33·8 | 33·7 | 13·2 | 12·3 | 29·7 | 31·8 | 27·3 | 22·6 | 13·7 | 24·2 |
| 13 | 12·9 | 10·9 | 50·9 | 23·6 | 31·7 | 18·2 | 15·7 | 24·8 | 29·5 | 27·3 | 19·7 | 13·8 | 23·2 |
| 14 | 11·2 | 10·5 | 60·8 | 24·3 | 30·3 | 18·4 | 13·1 | 27·4 | 28·0 | 33·3 | 13·7 | 8·4 | 23·3 |
| 15 | 12·0 | 14·3 | 50·3 | 29·8 | 31·0 | 15·8 | 11·6 | 20·4 | 30·9 | 39·0 | 13·6 | 8·9 | 23·1 |
| 16 | 15·1 | 13·6 | 41·5 | 31·3 | 30·3 | 13·0 | 11·5 | 14·2 | 26·7 | 56·3 | 13·0 | 9·0 | 23·0 |
| 17 | 18·5 | 15·0 | 43·5 | 32·1 | 25·3 | 16·7 | 11·7 | 12·0 | 23·9 | 43·8 | 11·7 | 9·4 | 22·0 |
| 18 | 16·3 | 14·0 | 36·5 | 24·7 | 21·1 | 15·9 | 15·9 | 13·4 | 22·1 | 30·8 | 11·5 | 10·6 | 19·4 |
| 19 | 14·0 | 11·9 | 23·8 | 15·1 | 18·6 | 14·6 | 14·7 | 10·2 | 18·2 | 21·6 | 10·5 | 10·1 | 15·3 |
| 20 | 11·9 | 10·7 | 15·1 | 13·0 | 17·5 | 14·3 | 15·3 | 8·1 | 14·7 | 16·0 | 10·4 | 9·6 | 13·0 |
| 21 | 11·5 | 12·4 | 11·3 | 11·4 | 17·3 | 13·3 | 14·3 | 6·4 | 12·0 | 11·7 | 11·7 | 9·6 | 11·9 |
| 22 | 12·3 | 13·6 | 9·8 | 9·6 | 16·0 | 12·5 | 12·8 | 7·7 | 11·0 | 13·3 | 11·1 | 9·4 | 11·6 |
| 23 | 11·1 | 16·0 | 12·3 | 13·4 | 15·0 | 14·8 | 13·9 | 10·9 | 8·3 | 13·4 | 12·3 | 9·1 | 12·5 |
| 0 | 8·4 | 15·1 | 13·5 | 29·2 | 14·2 | 13·9 | 12·8 | 12·1 | 9·7 | 23·8 | 20·5 | 9·3 | 15·2 |
| 1 | 9·6 | 14·3 | 17·2 | 19·0 | 13·4 | 12·8 | 12·7 | 13·3 | 10·6 | 21·7 | 19·3 | 10·4 | 14·5 |
| 2 | 11·0 | 16·3 | 24·7 | 19·6 | 14·0 | 13·1 | 10·9 | 12·2 | 11·3 | 22·2 | 17·6 | 11·7 | 15·4 |
| 3 | 12·0 | 18·1 | 24·9 | 27·4 | 14·5 | 13·8 | 15·8 | 19·5 | 19·8 | 26·3 | 31·3 | 16·9 | 20·0 |
| 4 | 10·4 | 22·9 | 21·5 | 25·0 | 19·9 | 15·2 | 17·4 | 26·8 | 27·1 | 22·5 | 43·7 | 18·4 | 22·6 |
| 5 | 12·4 | 25·6 | 23·0 | 34·9 | 22·9 | 15·7 | 18·4 | 26·9 | 30·3 | 27·3 | 45·9 | 17·8 | 25·1 |
| 6 | 11·9 | 27·5 | 22·5 | 37·9 | 21·9 | 14·8 | 15·4 | 29·4 | 25·0 | 16·6 | 36·3 | 27·6 | 23·9 |
| 7 | 13·2 | 22·2 | 15·7 | 27·6 | 17·1 | 12·2 | 16·2 | 23·6 | 17·1 | 21·0 | 23·4 | 20·9 | 19·2 |
| 8 | 11·6 | 20·2 | 15·4 | 16·4 | 14·7 | 13·1 | 12·8 | 17·7 | 8·9 | 16·9 | 11·8 | 15·7 | 14·6 |
| 9 | 12·2 | 12·8 | 30·2 | 11·6 | 14·5 | 13·0 | 10·2 | 11·6 | 10·3 | 19·0 | 15·0 | 11·2 | 14·3 |
| 10 | 10·6 | 12·1 | 55·4 | 9·7 | 14·5 | 13·2 | 10·4 | 10·5 | 11·6 | 23·6 | 23·5 | 7·1 | 16·8 |
| 11 | 10·5 | 13·7 | 39·2 | 16·8 | 17·6 | 13·1 | 11·9 | 23·0 | 19·8 | 18·1 | 26·6 | 7·2 | 18·1 |

TABLE LIII.—Mean Difference of a Single Observation from the Monthly Mean, at the corresponding hour, for each Hour in each of the Astronomical Quarters, and in the Year 1844.

| Mak. M. T. | Nov. Dec. Jan. | Feb. March. April. | May. June. July. | Aug. Sept. Oct. | Year. | Mak. M. T. | Nov. Dec. Jan. | Feb. March. April. | May. June. July. | Aug. Sept. Oct. | Year. |
|---|---|---|---|---|---|---|---|---|---|---|---|
| h. | Mic. Div. | Mic. Div. | Mic. Div. | Mic. Div. | Mic. Div. | h. | Mic. Div. | Mic. Div. | Mic. Div. | Mic. Div. | Mic. Div. |
| 12 | 16·6 | 31·0 | 19·7 | 29·6 | 24·2 | 0 | 12·7 | 19·3 | 13·6 | 15·2 | 15·2 |
| 13 | 15·5 | 28·5 | 21·9 | 27·2 | 23·2 | 1 | 13·1 | 16·8 | 13·0 | 15·2 | 14·5 |
| 14 | 11·1 | 31·9 | 20·6 | 29·6 | 23·3 | 2 | 13·4 | 20·2 | 12·7 | 15·2 | 15·4 |
| 15 | 11·5 | 31·5 | 19·5 | 30·1 | 23·1 | 3 | 20·1 | 23·5 | 14·7 | 21·9 | 20·0 |
| 16 | 12·4 | 28·8 | 18·3 | 32·4 | 23·0 | 4 | 24·2 | 23·1 | 17·5 | 25·5 | 22·6 |
| 17 | 13·2 | 30·2 | 17·9 | 26·6 | 22·0 | 5 | 25·4 | 27·8 | 19·0 | 28·2 | 25·1 |
| 18 | 12·8 | 25·1 | 17·6 | 22·1 | 19·4 | 6 | 25·3 | 29·3 | 17·4 | 23·7 | 23·9 |
| 19 | 11·5 | 16·9 | 16·0 | 16·7 | 15·3 | 7 | 19·2 | 21·8 | 15·2 | 20·6 | 19·2 |
| 20 | 10·6 | 12·9 | 15·7 | 12·9 | 13·0 | 8 | 13·0 | 17·3 | 13·5 | 14·5 | 14·6 |
| 21 | 10·9 | 11·7 | 15·0 | 10·0 | 11·9 | 9 | 12·8 | 18·2 | 12·6 | 13·6 | 14·3 |
| 22 | 10·9 | 11·0 | 13·8 | 10·7 | 11·6 | 10 | 13·7 | 25·7 | 12·7 | 15·2 | 16·8 |
| 23 | 10·8 | 13·9 | 14·6 | 10·9 | 12·5 | 11 | 14·8 | 23·2 | 14·2 | 20·3 | 18·1 |

*Diurnal Variation of the Mean Difference.*—The mean difference for the vertical component has a well-marked maximum twice, and minimum twice, in the day. In the means for the year, the principal minimum occurs about $10^h$ A.M., the principal maximum about $5^h$ P.M.; a secondary minimum occurs about $9^h$ P.M., and a secondary maximum about $2^h$ A.M. The values of the maxima differ little from each other, and the principal

minimum is but slightly less than the secondary minimum. The mean difference has nearly a constant value from midnight till $5^h$ A.M. The following are the approximate times of maximum and minimum for each of the astronomical quarters of the year; the principal maximum, when it is distinctly marked, is indicated by +, and the principal minimum by –

| | | | | |
|---|---|---|---|---|
| Nov., Dec., Jan., . | Min. $-10^h$ A.M. | Max. $+5^h\ 30^m$ P.M. | Min. $9^h$ P.M. | Max. $12^h\ 10^m$ A.M. |
| Feb., March, April, | $-10$ A.M. | 6 10 P.M. | 8 30 P.M. | + 2 30 A.M. |
| May, June, July, | – 2 P.M. | 5 10 P.M. | 9 30 P.M. | + 1 10 A.M. |
| Aug., Sept. Oct., . | – 9 A.M. | 5 10 P.M. | 9 0 P.M. | + 5 0 A.M. |
| Year, . . | $-10$ A.M. | $+5$ 20 P.M. | 8 50 P.M. | 2 30 A.M. |

The law of variation of the diurnal disturbance of the vertical component has a considerable constancy in each quarter of the year; the differences are even less considerable than appears from the foregoing Table of epochs of maxima and minima.

*Annual Variation of the* number *of Positive Differences.*—The following are the numbers of differences in 100, which are positive for each month:—

| Jan. | Feb. | March. | April. | May. | June. | July. | Aug. | Sept. | Oct. | Nov. | Dec. |
|---|---|---|---|---|---|---|---|---|---|---|---|
| 53·0 | 49·5 | 57·7 | 49·8 | 52·5 | 55·7 | 55·4 | 52·0 | 55·0 | 50·0 | 46·5 | 40·7 |

These quantities do not vary regularly; on the whole, the vertical component was oftenest in excess of the monthly mean for the corresponding hours in the months from March till September, and least often in excess in the months of November and December. There were about 52 positive to 48 negative differences in the year 1844.

*Diurnal Variation of the* number *of Positive Differences.*—The numbers of positive differences in 100 for each hour of Makerstoun mean time in 1844, are as follow:—

| $12^h$ | $1^h$ A.M. | $2^h$ | $3^h$ | $4^h$ | $5^h$ | $6^h$ | $7^h$ | $8^h$ | $9^h$ | $10^h$ | $11^h$ | $0^h$ | $1^h$ P.M. | $2^h$ | $3^h$ | $4^h$ | $5^h$ | $6^h$ | $7^h$ | $8^h$ | $9^h$ | $10^h$ | $11^h$ |
|---|---|---|---|---|---|---|---|---|---|---|---|---|---|---|---|---|---|---|---|---|---|---|---|
| 65·2 | 63·3 | 66·5 | 63·9 | 63·9 | 63·9 | 63·0 | 54·6 | 52·7 | 52·7 | 52·1 | 47·6 | 40·9 | 42·8 | 40·9 | 37·1 | 36·7 | 35·1 | 37·7 | 37·1 | 45·7 | 54·0 | 56·9 | 61·3 |

The number of positive differences is greatest about $2^h$ A.M., and is least about $5^h$ P.M. These are the epochs already obtained for the greatest negative and positive effects of disturbance on the vertical component (see p. 384).

*Mean Disturbance.*

Deducing the differences by using the means obtained from the 5 days least disturbed, Table XLV., in the manner already done for the declination, pages 349 and 350, we obtain the following results:—

*Annual Variation of the Mean Disturbance.*—The following are the mean disturbances, in micrometer divisions, for a single observation of the vertical component in each month of 1844:—

| Jan. | Feb. | March. | April. | May. | June. | July. | Aug. | Sept. | Oct. | Nov. | Dec. |
|---|---|---|---|---|---|---|---|---|---|---|---|
| 12·3 | 15·9 | 27·8 | 23·1 | 21·1 | 14·5 | 13·8 | 17·9 | 18·5 | 23·7 | 18·7 | 12·1 |

These quantities differ little from the mean differences, page 385, and they follow the same law. The disturbance of the vertical component is a maximum near the equinoxes, and a minimum near the solstices.

The mean disturbance of an observation of the vertical component for the year 1844 = 18·3 Mic. div.

*Diurnal Variation of the Positive and Negative Sums of Disturbance.*—The following are the sums of the positive and of the negative disturbances, in micrometer divisions, for each hour of the day in 1844:—

| $12^h$ | $1^h$ A.M. | $2^h$ | $3^h$ | $4^h$ | $5^h$ | $6^h$ | $7^h$ | $8^h$ | $9^h$ | $10^h$ | $11^h$ | $0^h$ | $1^h$ P.M. | $2^h$ | $3^h$ | $4^h$ | $5^h$ | $6^h$ | $7^h$ | $8^h$ | $9^h$ | $10^h$ | $11^h$ |
|---|---|---|---|---|---|---|---|---|---|---|---|---|---|---|---|---|---|---|---|---|---|---|---|
| +1169 | 1330 | 1132 | 1193 | 1235 | 1323 | 1308 | 1398 | 1259 | 1536 | 1843 | 2560 | 3413 | 3552 | 3998 | 5262 | 6002 | 6974 | 6926 | 5672 | 4142 | 2683 | 1635 | 1297 |
| –5764 | 5614 | 5774 | 5636 | 5508 | 5260 | 4604 | 3383 | 2931 | 2369 | 1838 | 1512 | 1289 | 1164 | 1226 | 1048 | 1010 | 806 | 858 | 817 | 1018 | 1926 | 3342 | 4125 |

The sums of the *positive* disturbances—those which increase the value of the vertical component—are a maximum at $5^h\ 30^m$ P.M., and they are a minimum from $11^h$ P.M. till $8^h$ A.M.; during which interval, the positive disturbance has nearly a constant value. The sums of the negative disturbances are a minimum

about $6^h$ P.M.; the values, however, do not differ greatly from noon till $8^h$ P.M.; they are a maximum about $2^h$ A.M. These epochs differ little from those obtained for the horizontal component.

*Diurnal Variation of the Mean Disturbance.*—The following are the mean disturbances in micrometer divisions for each hour, without regard to sign:—

| 12h | 1h A.M. | 2h | 3h | 4h | 5h | 6h | 7h | 8h | 9h | 10h | 11h | 0h | 1h P.M. | 2h | 3h | 4h | 5h | 6h | 7h | 8h | 9h | 10h | 11h |
|---|---|---|---|---|---|---|---|---|---|---|---|---|---|---|---|---|---|---|---|---|---|---|---|
| 22·2 | 22·2 | 22·1 | 21·8 | 21·5 | 21·0 | 18·9 | 15·3 | 13·4 | 12·5 | 11·8 | 13·0 | 15·0 | 15·1 | 16·7 | 20·2 | 22·4 | 24·9 | 24·9 | 20·7 | 16·5 | 14·7 | 15·9 | 17·3 |

These quantities give the same law as that already obtained for the mean *differences*, p. 387. The mean disturbance of the vertical component is a minimum at $10^h$ A.M.; it is a maximum at $5^h\ 40^m$ P.M.; a secondary minimum occurs at $9^h\ 10^m$ P.M., and a secondary maximum about $2^h$ A.M.,—the value of the disturbance varying little from midnight till $5^h$ A.M.

*Annual Variation of the* number *of Positive Disturbances.*—The numbers per cent. of hourly observations in each month, which were greater than the normal means for the corresponding hours, are as follow:—

| Jan. | Feb. | March. | April. | May. | June. | July. | Aug. | Sept. | Oct. | Nov. | Dec. |
|---|---|---|---|---|---|---|---|---|---|---|---|
| 54·5 | 41·7 | 71·0 | 50·0 | 52·3 | 55·8 | 55·4 | 46·3 | 62·3 | 57·3 | 40·7 | 35·4 |

Taking the mean of each three months as the mean for the middle month—

| | | | | | | | | | | | |
|---|---|---|---|---|---|---|---|---|---|---|---|
| 43·9 | 55·7 | 54·2 | 57·8 | 52·7 | 54·5 | 52·5 | 54·7 | 55·3 | 53·4 | 44·5 | 43·5 |

The *number* of positive disturbances of the vertical component is a minimum at the winter solstice, it is a maximum at the equinoxes; but the numbers differ little, in the means of the three months, from February till October. In the year 1844, there were, in 100 observations, 52 greater and 48 less than the normal means at the corresponding hours.

*Diurnal Variation of the* number *of Positive Disturbances.*—The numbers per cent. of hourly observations which were greater than the monthly means at the corresponding hours, as deduced from the 5-day series, are as follow:—

| 12h | 1h A.M. | 2h | 3h | 4h | 5h | 6h | 7h | 8h | 9h | 10h | 11h | 0h | 1h P.M. | 2h | 3h | 4h | 5h | 6h | 7h | 8h | 9h | 10h | 11h |
|---|---|---|---|---|---|---|---|---|---|---|---|---|---|---|---|---|---|---|---|---|---|---|---|
| 38·3 | 37·7 | 39·0 | 40·3 | 39·3 | 40·6 | 40·6 | 42·8 | 40·3 | 40·6 | 50·8 | 55·3 | 57·2 | 61·7 | 64·5 | 63·9 | 67·1 | 70·6 | 68·7 | 69·3 | 67·4 | 60·1 | 47·9 | 41·5 |

The number of positive disturbances is a maximum about $5^h$ P.M., and a minimum about $1^h$ A.M. The reverse, of course, holds for the numbers of negative disturbances; they are a maximum about $1^h$ A.M., and a minimum about $5^h$ P.M. Since the numbers of positive and negative disturbances have the same epochs of maximum and minimum as their sums, it may be still a question whether the *mean* positive and negative disturbance obeys the same law.

*Diurnal Variation of the Positive and Negative* Means *of Disturbance.*—Dividing the sums of positive and negative disturbances by their respective numbers, we have the following means:—

| | 12h | 1h A.M. | 2h | 3h | 4h | 5h | 6h | 7h | 8h | 9h | 10h | 11h | 12h | 1h P.M. | 2h | 3h | 4h | 5h | 6h | 7h | 8h | 9h | 10h | 11h |
|---|---|---|---|---|---|---|---|---|---|---|---|---|---|---|---|---|---|---|---|---|---|---|---|---|
| + | 9·7 | 11·3 | 9·3 | 9·5 | 10·0 | 10·4 | 10·3 | 10·4 | 10·0 | 12·1 | 11·6 | 14·8 | 19·1 | 18·4 | 19·8 | 26·3 | 28·7 | 31·6 | 32·2 | 26·1 | 19·6 | 14·3 | 10·9 | 10·0 |
| − | 29·9 | 28·8 | 30·2 | 30·1 | 29·0 | 28·3 | 24·7 | 18·9 | 15·7 | 12·7 | 11·9 | 10·8 | 9·6 | 9·7 | 11·0 | 9·3 | 9·8 | 8·8 | 8·8 | 8·5 | 10·0 | 15·4 | 20·5 | 22·5 |

These quantities give nearly the same results as have already been obtained for the *sums* of disturbances.
The maximum of the *mean* positive disturbance occurs about $6^h$ P.M.
The minimum ..... between $11^h$ P.M. and $8^h$ A.M.
The maximum ..... negative..... about $2^h$ A.M.
The minimum ..... about $6^h$ P.M.

The mean positive disturbance is about three times as great at $5^h$ and $6^h$ P.M. as at the hours from $10^h$ P.M. till $8^h$ A.M.; and the mean negative disturbance is three-and-a-half times as great at the hours from midnight till $4^h$ A.M., as at the hours 5, 6, or 7 P.M.

*Note on the least probable error of an Observation of the Vertical Component.*—Investigations similar to those for the probable error of magnetic declination have not been made for this component. The mean difference, however, for an observation of the vertical component is least for the months of December and January, when it is 12·3 micrometer divisions, and for the months of June and July, when it is 14·0 micrometer divisions.

The probable error of an observation of the vertical component from the monthly mean for the corresponding hour will therefore be in $\left\{\begin{array}{ll}\text{December and February about} & 0{\cdot}00008 \\ \text{June and July} \quad \ldots\ldots & 0{\cdot}00010\end{array}\right\}$ of the whole component. These values are estimated from a consideration of the results for the declination, p. 352.

The mean difference of an observation is least at $10^h$ A.M., being 11·6 micrometer divisions, when the mean for the whole year is considered. The probable error of an observation from the monthly mean for the corresponding hour, without reference to which month, will be less than 0·00008 of the whole vertical component.

## MAGNETIC DIP.

The following results are deduced from the variations of the horizontal and vertical components of magnetic force by means of the formula

$$\Delta\,\theta = \frac{\frac{1}{2}\sin 2\,\theta}{0{\cdot}0002909}\left(\frac{\Delta\,Y}{Y} - \frac{\Delta\,X}{X}\right)$$

where $\frac{\Delta\,Y}{Y}$ and $\frac{\Delta\,X}{X}$ are the variations respectively of the vertical and horizontal components, as given in the previous Tables, $\theta$ is the magnetic dip, assumed to be 71° 18′, $\Delta\,\theta$ is the variation of dip, as given in the following Tables, and 0·0002909 is the value of 1′ in parts of radius.

*Secular Change of Magnetic Dip.*—This deduced from the mean secular changes for the two components, pages 356 and 374, = −6′·1. It is very probable that this change is considerably too great, and therefore that the secular change for one or both components is also in error, or is due to instrumental causes.

*Annual Period of Magnetic Dip.*—The following monthly means are obtained from the means for the two components, pages 356 and 374, where the secular change is eliminated:—

| Jan. | Feb. | March. | April. | May. | June. | July. | Aug. | Sept. | Oct. | Nov. | Dec. |
|---|---|---|---|---|---|---|---|---|---|---|---|
| 0′·95 | 0′·76 | 1′·23 | 1′·35 | 0′·68 | 0′·07 | 0′·00 | 0′·39 | 0′·73 | 1′·00 | 1′·01 | 0′·76 |

From these quantities the magnetic dip appears to be a maximum about the beginning of April and the beginning of November; it is a principal minimum about the beginning of July, and a secondary minimum about January. This result differs somewhat from the result obtained from the observations for 1843 (p. 248); this is obviously due to the difference in the results for the vertical component in the two years.

TABLE LIV.—Variations of Magnetic Dip with reference to the Moon's Age, Declination, and Distance, as deduced from Tables XXIII. and XXXIX.

| Moon's Age. | Variations of Magnetic Dip. | Moon's Age. | Variations of Magnetic Dip. | After Moon farthest North. | Variations of Magnetic Dip. | After Moon farthest North. | Variations of Magnetic Dip. | Before and after Perigee. | Variations of Magnetic Dip. | Before and after Apogee. | Variations of Magnetic Dip. |
|---|---|---|---|---|---|---|---|---|---|---|---|
| Day. | ′ | Day. | ′ | Day. | ′ | Day. | ′ | Day. | ′ | Day. | ′ |
| 15 | 0·411 | 0 | 0·055 | 0 | 0·138 | 14 | 0·155 | 7 | 0·278 | 7 | 0·176 |
| 16 | 0·410 | 1 | 0·133 | 1 | 0·113 | 15 | 0·045 | 6 | 0·330 | 6 | 0·182 |
| 17 | 0·597 | 2 | 0·077 | 2 | 0·000 | 16 | 0·043 | 5 | 0·404 | 5 | 0·338 |
| 18 | 0·505 | 3 | 0·098 | 3 | 0·194 | 17 | 0·169 | 4 | 0·335 | 4 | 0·401 |
| 19 | 0·589 | 4 | 0·000 | 4 | 0·305 | 18 | 0·198 | 3 | 0·273 | 3 | 0·361 |
| 20 | 0·469 | 5 | 0·072 | 5 | 0·480 | 19 | 0·215 | 2 | 0·251 | 2 | 0·433 |
| 21 | 0·370 | 6 | 0·147 | 6 | 0·421 | 20 | 0·270 | 1 | 0·248 | 1 | 0·382 |
| 22 | 0·323 | 7 | 0·152 | 7 | 0·423 | 21 | 0·405 | P | 0·096 | A | 0·306 |
| 23 | 0·388 | 8 | 0·133 | 8 | 0·326 | 22 | 0·350 | 1 | 0·077 | 1 | 0·231 |
| 24 | 0·233 | 9 | 0·428 | 9 | 0·333 | 23 | 0·412 | 2 | 0·167 | 2 | 0·069 |
| 25 | 0·133 | 10 | 0·511 | 10 | 0·298 | 24 | 0·543 | 3 | 0·181 | 3 | 0·000 |
| 26 | 0·157 | 11 | 0·491 | 11 | 0·114 | 25 | 0·398 | 4 | 0·071 | 4 | 0·024 |
| 27 | 0·027 | 12 | 0·575 | 12 | 0·144 | 26 | 0·464 | 5 | 0·187 | 5 | 0·060 |
| 28 | 0·025 | 13 | 0·466 | 13 | 0·130 | 27 | 0·277 | 6 | 0·042 | 6 | 0·291 |
| 29 | 0·003 | 14 | 0·547 | | | | | 7 | 0·274 | 7 | 0·421 |

*Variations of Magnetic Dip with reference to the Moon's Age.*—An examination of the mean variations in the first portion of Table LIV. will shew that the magnetic dip is a maximum when the moon is in opposition, and a minimum when in conjunction. This result is also evident in the following means of groups :—

| | | | |
|---|---|---|---|
| 14 days to 16 days, Full Moon, | 0′·456 | 29 days to 1 day, New Moon, | 0′·064 |
| 17 ..... 20 ... | 0′·540 | 2 ..... 5 days, | 0′·062 |
| 21 ..... 24 ... | 0′·328 | 6 ..... 9 ... | 0′·215 |
| 25 ..... 28 ... | 0′·085 | 10 ..... 13 ... | 0′·511 |

This result agrees generally with that obtained from the incomplete series of observations for 1843. In 1843 there was the appearance of a secondary maximum at conjunction ; in 1844 there is the appearance of a secondary minimum at opposition.

*Variations of Magnetic Dip with reference to the Moon's Position in Declination.*—The general appearance of the quantities in the second portion of Table LIV. is that of a maximum of magnetic dip when the moon is near the equator, and a minimum when it is farthest north and farthest south. The following are means of groups :—

| | | | |
|---|---|---|---|
| 27 days to 1 day, Moon farthest North, | 0′·176 | 13 days to 15 days, Moon farthest South, | 0′·110 |
| 2 ..... 5 days, | 0′·245 | 16 ..... 19 ... | 0′·156 |
| 6 ..... 8 ... | 0′·390 | 20 ..... 22 ... | 0′·342 |
| 9 ..... 12 ... | 0′·222 | 23 ..... 26 ... | 0′·404 |

Both maxima occur when the moon is from one to three days north of the equator. This result was only partially obtained from the incomplete series of observations for 1843.

TABLE LV.—Diurnal Variations of Magnetic Dip for each Month in 1844, as deduced from Tables XXVII. and XLIII.

| Mak. M. T. | Jan. | Feb. | March. | April. | May. | June. | July. | Aug. | Sept. | Oct. | Nov. | Dec. | Year. |
|---|---|---|---|---|---|---|---|---|---|---|---|---|---|
| h. | ′ | ′ | ′ | ′ | ′ | ′ | ′ | ′ | ′ | ′ | ′ | ′ | ′ |
| 12 | 0·578 | 0·311 | 0·592 | 0·943 | 1·561 | 1·137 | 1·230 | 0·924 | 0·257 | 0·294 | 0·589 | 0·662 | 0·489 |
| 13 | 0·606 | 0·547 | 1·278 | 0·811 | 1·608 | 1·234 | 1·310 | 1·172 | 0·245 | 0·355 | 0·589 | 0·540 | 0·591 |
| 14 | 0·663 | 0·655 | 1·111 | 1·096 | 1·748 | 1·346 | 1·457 | 1·193 | 0·536 | 0·340 | 0·679 | 0·683 | 0·692 |
| 15 | 0·439 | 0·535 | 0·836 | 1·486 | 1·959 | 1·471 | 1·633 | 1·354 | 0·336 | 0·011 | 0·421 | 0·597 | 0·656 |
| 16 | 0·219 | 0·535 | 0·692 | 1·155 | 2·178 | 1·667 | 1·793 | 1·395 | 0·365 | 0·000 | 0·266 | 0·280 | 0·611 |
| 17 | 0·000 | 0·016 | 0·923 | 0·969 | 2·015 | 1·742 | 1·943 | 1·775 | 0·281 | 0·213 | 0·207 | 0·126 | 0·583 |
| 18 | 0·012 | 0·169 | 0·283 | 1·223 | 2·238 | 2·149 | 2·074 | 1·836 | 0·674 | 0·407 | 0·000 | 0·000 | 0·655 |
| 19 | 0·032 | 0·173 | 0·708 | 1·829 | 2·579 | 2·406 | 2·494 | 2·474 | 1·402 | 0·623 | 0·133 | 0·017 | 0·972 |
| 20 | 0·250 | 0·155 | 1·431 | 2·670 | 3·181 | 2·917 | 2·934 | 3·227 | 1·840 | 1·453 | 0·345 | 0·296 | 1·458 |
| 21 | 0·427 | 0·455 | 1·905 | 3·190 | 3·435 | 3·209 | 3·486 | 3·344 | 2·452 | 2·124 | 0·978 | 0·561 | 1·863 |
| 22 | 0·781 | 0·660 | 2·120 | 3·100 | 3·494 | 3·147 | 3·603 | 3·251 | 2·856 | 2·438 | 1·337 | 0·838 | 2·035 |
| 23 | 0·766 | 0·824 | 1·880 | 2·962 | 3·124 | 2·643 | 3·056 | 2·564 | 2·222 | 1·891 | 1·365 | 0·818 | 1·742 |
| 0 | 0·635 | 0·568 | 1·549 | 2·053 | 2·366 | 1·880 | 2·213 | 1·960 | 1·641 | 1·332 | 0·799 | 0·646 | 1·203 |
| 1 | 0·349 | 0·227 | 0·719 | 1·493 | 1·955 | 1·322 | 1·496 | 1·118 | 0·851 | 0·836 | 0·785 | 0·579 | 0·710 |
| 2 | 0·184 | 0·000 | 0·704 | 1·037 | 1·418 | 0·751 | 0·971 | 0·688 | 0·539 | 0·648 | 0·604 | 0·477 | 0·401 |
| 3 | 0·371 | 0·131 | 0·292 | 0·745 | 1·287 | 0·572 | 0·710 | 0·406 | 0·538 | 0·319 | 0·694 | 0·477 | 0·278 |
| 4 | 0·206 | 0·279 | 0·149 | 0·581 | 0·397 | 0·349 | 0·584 | 0·507 | 0·092 | 0·301 | 0·978 | 0·490 | 0·142 |
| 5 | 0·341 | 0·429 | 0·159 | 0·000 | 0·230 | 0·121 | 0·434 | 0·000 | 0·296 | 0·240 | 0·418 | 0·540 | 0·000 |
| 6 | 0·515 | 0·400 | 0·549 | 0·146 | 0·000 | 0·062 | 0·000 | 0·174 | 0·202 | 0·401 | 0·498 | 0·595 | 0·028 |
| 7 | 0·723 | 0·421 | 0·052 | 0·510 | 0·186 | 0·000 | 0·047 | 0·172 | 0·119 | 0·498 | 0·805 | 0·617 | 0·078 |
| 8 | 0·459 | 0·242 | 0·000 | 0·485 | 0·632 | 0·264 | 0·548 | 0·354 | 0·116 | 0·329 | 0·565 | 0·344 | 0·094 |
| 9 | 0·546 | 0·252 | 0·729 | 0·733 | 1·023 | 0·519 | 0·811 | 0·712 | 0·000 | 0·336 | 0·801 | 0·707 | 0·330 |
| 10 | 0·480 | 0·641 | 0·665 | 0·395 | 1·173 | 0·630 | 0·959 | 0·584 | 0·048 | 0·166 | 0·654 | 0·777 | 0·330 |
| 11 | 0·457 | 0·597 | 0·279 | 0·765 | 1·520 | 1·017 | 1·103 | 0·975 | 0·075 | 0·385 | 0·774 | 0·622 | 0·447 |

*Diurnal Variation of Magnetic Dip.*—In the mean for the year the magnetic dip is a maximum at $10^h$ $10^m$ A.M.; it has its least value at $5^h$ $10^m$ P.M., but the value differs little from $5^h$ till $8^h$ P.M.; it has a secondary maximum at $2^h$ $10^m$ A.M., and a secondary minimum at $5^h$ $10^m$ A.M. The increase is most rapid from $6^h$ A.M. till $10^h$ A.M., and the diminution is most rapid from $10^h$ A.M. till $5^h$ P.M.

In the four months of May, June, July, and August, the secondary maximum and minimum are not at all visible; in the four equinoctial months the variation is very irregular from about $5^h$ P.M. till about $5^h$ A.M., the dip oscillating about a nearly constant value; in the four winter months the secondary becomes the principal maximum, the maximum at $5^h$ nearly disappearing in December. The principal minimum always occurs about $10^h$ A.M.

The range of the mean diurnal variation of magnetic dip for the year $= 2'\cdot04$

We might proceed to consider the diurnal variation, as obtained from the selected series of 10 days and 5 days in each month, but this will be done with more accuracy in connection with another year's observations; at present it will be enough to give the variation for the year, as deduced from the 120-day and 60-day series. The variations for these series, deduced from the last columns of Tables XXVIII., XXIX., XLIV., and XLV., and reduced so that the mean is equal to the mean of the last column of Table LV., are as follow:—

| | 12h | 1h A.M. | 2h | 3h | 4h | 5h | 6h | 7h | 8h | 9h | 10h | 11h | 0h | 1h P.M. | 2h | 3h | 4h | 5h | 6h | 7h | 8h | 9h | 10h | 11h |
|---|---|---|---|---|---|---|---|---|---|---|---|---|---|---|---|---|---|---|---|---|---|---|---|---|
| Series. | ′ | ′ | ′ | ′ | ′ | ′ | ′ | ′ | ′ | ′ | ′ | ′ | ′ | ′ | ′ | ′ | ′ | ′ | ′ | ′ | ′ | ′ | ′ | ′ |
| 120-day, | 0·54 | 0·60 | 0·66 | 0·71 | 0·69 | 0.68 | 0·81 | 1·02 | 1·46 | 1·83 | 1·98 | 1·71 | 1·28 | 0·74 | 0·47 | 0·28 | 0·24 | 0·07 | −0·04 | −0·05 | 0·05 | 0·15 | 0·21 | 0·29 |
| 60-day, | 0·48 | 0·54 | 0·61 | 0·66 | 0·68 | 0·69 | 0·83 | 1·02 | 1·49 | 1·84 | 1·96 | 1·76 | 1·30 | 0·76 | 0·49 | 0·34 | 0·29 | 0·04 | −0·03 | −0·04 | 0·01 | 0·11 | 0·24 | 0·30 |

The means for both series give the same result; the maximum of dip occurs at $10^h$ A.M., and the minimum at $6^h$ $40^m$ P.M.: the secondary maximum and minimum are not exhibited in these variations; the dip, however, has nearly a constant value from $2^h$ till $5^h$ A.M. The results for the selected series, which are nearly unaffected by intermittent disturbances, place the principal minimum an hour and a half later than the result for the whole series, and the removal of the disturbances seems nearly to obliterate the secondary maximum and minimum in the diurnal variation. The range of the mean diurnal variation for the year from all the three series is slightly above 2′, which is equivalent to a variation of 6′ of magnetic declination; the range of the diurnal variation of magnetic declination for the year being 7′·7, the motion in declination is rather greater than that in dip at Makerstoun.

*Ranges of the Mean Diurnal Variation of Magnetic Dip.*—The ranges of the mean diurnal variation for each month, as deduced from the whole series of observations, are as follow:—

| Jan. | Feb. | March. | April. | May. | June. | July. | Aug. | Sept. | Oct. | Nov. | Dec. |
|---|---|---|---|---|---|---|---|---|---|---|---|
| 0′·78 | 0′·82 | 2′·12 | 3′·19 | 3′·49 | 3′·21 | 3′·60 | 3′·34 | 2′·86 | 2′·44 | 1′·36 | 0′·84 |

These quantities follow the same law as that already obtained for the horizontal component. The range of magnetic dip is a minimum, and has a nearly constant value, in the three winter months, December, January, and February; the range for November is exaggerated by intermittent disturbances. The range is a maximum, and is nearly constant in the months of April, May, June, July, and August. When the ranges of magnetic declination are reduced to their equivalent motions, as shewn by a needle freely suspended in the direction of magnetic dip, it will be found that the vertical motion is greater than the horizontal motion in May and July, that the amounts of the two motions differ little in the months for which the sun is north of the equator, and that in the months for which it is south of the equator the horizontal motions are considerably greater than the vertical motions.

*Diurnal Variation of Magnetic Dip with reference to the Moon's Hour-Angle.*—The following Table contains the variations of magnetic dip, as deduced from the last three columns of Tables XXXI. and XLVII.:—

TABLE LVI.—Variations of Magnetic Dip, with reference to the Moon's Hour-Angle, as deduced from Tables XXXI. and XLVII.

| Moon's Hour-Angle. | Lunations. | | | Moon's Hour-Angle. | Lunations. | | | Moon's Hour-Angle. | Lunations. | | |
|---|---|---|---|---|---|---|---|---|---|---|---|
| | Winter. | Summer. | Year. | | Winter. | Summer. | Year. | | Winter. | Summer. | Year. |
| h. | ′ | ′ | ′ | h. | ′ | ′ | ′ | h. | ′ | ′ | ′ |
| 0 | 0·202 | 0·192 | 0·134 | 8 | 0·000 | 0·356 | 0·115 | 16 | 0·247 | 0·233 | 0·176 |
| 1 | 0·138 | 0·241 | 0·126 | 9 | 0·143 | 0·219 | 0·118 | 17 | 0·226 | 0·300 | 0·200 |
| 2 | 0·228 | 0·196 | 0·149 | 10 | 0·147 | 0·272 | 0·146 | 18 | 0·171 | 0·369 | 0·207 |
| 3 | 0·141 | 0·255 | 0·135 | 11 | 0·187 | 0·248 | 0·152 | 19 | 0·032 | 0·291 | 0·099 |
| 4 | 0·056 | 0·206 | 0·068 | 12 | 0·023 | 0·216 | 0·056 | 20 | 0·151 | 0·404 | 0·215 |
| 5 | 0·196 | 0·240 | 0·155 | 13 | 0·119 | 0·081 | 0·036 | 21 | 0·076 | 0·386 | 0·168 |
| 6 | 0·107 | 0·278 | 0·129 | 14 | 0·127 | 0·000 | 0·000 | 22 | 0·213 | 0·358 | 0·222 |
| 7 | 0·114 | 0·249 | 0·119 | 15 | 0·164 | 0·202 | 0·120 | 23 | 0·112 | 0·304 | 0·145 |
| | | | | | | | | 24 | 0·107 | 0·297 | 0·139 |

The following are the means at nearly two-hourly intervals :—

| Groups, | 0h 0m | 2h 25m | 4h 20m | 6h 15m | 8h 10m | 10h 5m | 12h 0m | 13h 55m | 15h 50m | 17h 45m | 19h 40m | 21h 35m |
|---|---|---|---|---|---|---|---|---|---|---|---|---|
| Winter,..... | 0′·15 | 0′·18 | 0′·13 | 0′·11 | 0′·07 | 0′·17 | 0′·07 | 0′·14 | 0′·24 | 0′·10 | 0′·11 | 0′·16 |
| Summer,... | 0′·24 | 0′·22 | 0′·22 | 0′·26 | 0′·29 | 0′·26 | 0′·15 | 0′·10 | 0′·27 | 0′·33 | 0′·39 | 0′·33 |
| Year 1844, | 0′·13 | 0′·14 | 0′·11 | 0′·12 | 0′·12 | 0′·15 | 0′·05 | 0′·06 | 0′·19 | 0′·15 | 0′·19 | 0′·18 |

In the winter group—

The principal maximum of dip occurs about 4 hours after the moon's inferior transit.
The principal minimum occurs 4 hours before and at the inferior transit.
A secondary maximum occurs about 2 hours after the superior transit.
A secondary minimum occurs about 6 hours before the superior transit.

There is a secondary maximum 2 hours before the inferior transit, which is perhaps accidental.

In the summer group the law of variation is most distinct—

The principal maximum occurs 4 hours before the moon's superior transit.
The principal minimum occurs about 2 hours after the inferior transit.
The secondary maximum occurs about 4 hours before the inferior transit.
The secondary minimum occurs about 3 hours after the superior transit.

In the mean for the year the secondary maximum and minimum are not well marked—

The principal maximum occurs about 6 hours after the inferior transit.
The principal minimum occurs about 1 hour after the inferior transit.
The secondary maximum occurs about 2 hours before the inferior transit.
The secondary minimum occurs about 6 hours before the inferior transit.

The whole range of these variations is very small, the greatest range is that for the summer group, which is 0′·4, this however is equivalent to a range of 1′·2 for the declination: if we examine the similar discussion for the magnetic declination, p. 342, it will be seen that the greatest range is that for the winter group, which is 1′·5; so that the diurnal range of the variation due to the moon is nearly the same for the magnetic declination in winter as it is for the magnetic dip in summer.

If we determine the variations from those for the horizontal and vertical components after Tables XXXI. and XLVII., from which the large disturbances have been removed, we have for the variations of dip for the year—

| 0h 0m | 2h 25m | 4h 20m | 6h 15m | 8h 10m | 10h 5m | 12h 0m | 13h 55m | 15h 50m | 17h 45m | 19h 40m | 21h 35m |
|---|---|---|---|---|---|---|---|---|---|---|---|
| 0′·104 | 0′·087 | 0′·030 | 0′·062 | 0′·045 | 0′·068 | 0′·001 | 0′·000 | 0′·134 | 0′·087 | 0′·157 | 0′·080 |

These quantities give nearly the same law as that obtained above.

## INTERMITTENT DISTURBANCES.

*Effect of Intermittent Disturbances upon the Yearly Mean of Magnetic Dip.*—We obtain the following results for the mean magnetic dip from the values of the horizontal and vertical components, pages 365 and 384:—

| | |
|---|---|
| The Mean Magnetic Dip, as deduced from the whole series of Hourly Observations, is greater than that deduced from the..... | 120-day series, by 0′·175<br>60-day series, by 0′·245 |

It has been found, p. 343, that the intermittent disturbances have no effect on the mean declination; it appears, however, from the above results, that they affect the mean dip, the result deduced from the 60-day series, that least affected by disturbance, shewing a less dip than that deduced from the whole series, by 0′·25, which is equivalent to about 0′·8 for the magnetic declination.

*Effect on the Monthly Mean of Magnetic Dip.*—Making use of the quantities for the two components of force, pages 365 and 384, we obtain the following corrections of the means of magnetic dip from the 10-day and 5-day series, to those from the complete series of observations in each month:—

| | Jan. | Feb. | March. | April. | May. | June. | July. | Aug. | Sept. | Oct. | Nov. | Dec. |
|---|---|---|---|---|---|---|---|---|---|---|---|---|
| 10 days, | +0′·07 | +0′·46 | +0′·29 | +0′·33 | −0′·04 | −0′·05 | −0′·01 | +0′·09 | +0′·01 | +0′·48 | +0′·18 | +0′·30 |
| 5 days, | +0′·13 | +0′·54 | +0′·42 | +0′·42 | +0′·10 | −0′·23 | −0′·03 | +0′·14 | +0′·13 | +0′·56 | +0′·36 | +0′·38 |

These quantities obey the same law as that deduced from the mean variations of dip for each month; upon applying them with an opposite sign, as corrections to the mean variations of dip, p. 390, we obtain the following monthly mean variations of magnetic dip, as deduced from the 10-day and 5-day series of observations selected in each month as least affected by disturbance:—

| | Jan. | Feb. | March. | April. | May. | June. | July. | Aug. | Sept. | Oct. | Nov. | Dec. |
|---|---|---|---|---|---|---|---|---|---|---|---|---|
| 10 days, | 0′·88 | 0′·30 | 0′·94 | 1′·02 | 0′·72 | 0′·12 | 0′·01 | 0′·30 | 0′·71 | 0′·52 | 0′·83 | 0′·46 |
| 5 days, | 0′·82 | 0′·22 | 0′·81 | 0′·94 | 0′·58 | 0′·30 | 0′·03 | 0′·25 | 0′·60 | 0′·44 | 0′·65 | 0′·38 |

The variations follow the same law, with some irregularities, as the variations from the complete series; the ranges, however, are smaller; the conclusion already stated, with respect to the horizontal component, is therefore equally applicable here, see p. 356.

*Effect of Disturbances on the Hourly Means of Magnetic Dip.*—The following are the differences of the hourly means of magnetic dip for the year, or the means as deduced from the whole series, *minus* the means as deduced from the 120-day and 60-day series of observations (see Table LV. and p. 392), each series having the same mean value.

| Whole Series *Minus.* | A.M. 12h | 1h | 2h | 3h | 4h | 5h | 6h | 7h | 8h | 9h | 10h | 11h |
|---|---|---|---|---|---|---|---|---|---|---|---|---|
| 120-day series, | −0·05 | −0·01 | +0·03 | −0·05 | −0·08 | −0·10 | −0·16 | −0·05 | −0·01 | +0·03 | +0·06 | +0·03 |
| 60-day series, | +0·01 | +0·05 | +0·08 | −0·01 | −0·07 | −0·10 | −0·17 | −0·05 | −0·03 | +0·02 | +0·07 | −0·02 |
| | P.M. 0h | 1h | 2h | 3h | 4h | 5h | 6h | 7h | 8h | 9h | 10h | 11h |
| 120-day series, | −0·08 | −0·03 | −0·07 | 0·00 | −0·10 | −0·07 | +0·06 | +0·13 | +0·05 | +0·18 | +0·12 | +0·16 |
| 60-day series, | −0·09 | −0·05 | −0·09 | −0·06 | −0·15 | −0·04 | +0·06 | +0·12 | +0·08 | +0·22 | +0·08 | +0·14 |

Both series of differences give the same law; considering the differences for the 60-day series, we find that the mean effect of disturbance upon the diurnal variation of magnetic dip is a positive maximum twice and a negative maximum twice; it is a principal positive maximum about $9^h$ P.M. and a secondary positive maximum at $10^h$ A.M.: it is a negative maximum at $6^h$ A.M. and about $5^h$ P.M. The effect of disturbance in diminishing the westerly declination, and in increasing the dip, is a maximum about $9^h$ P.M.; the effect of disturbances in increasing the westerly declination is a maximum about $10^h$ A.M., when their effect in increasing the dip is a secondary maximum. The effect of disturbances in diminishing the dip is a maximum when the effect upon the magnetic declination is zero.

## TOTAL MAGNETIC FORCE.

The following results are deduced from the variations of the horizontal and vertical components by means of the formula

$$\frac{\Delta R}{R} = \frac{\Delta Y}{Y} - \cos^2\theta\left(\frac{\Delta Y}{Y} - \frac{\Delta X}{X}\right)$$

where $\frac{\Delta R}{R}$ is the variation of the total force, $\frac{\Delta Y}{Y}$ and $\frac{\Delta X}{X}$ the quantities in the tables for the vertical and horizontal components respectively, and $\theta$ the magnetic dip assumed $= 71° 18'$.

*Secular Change of the Total Force.*—This deduced from the secular changes for the two components, pages 356 and 374, = − 0·001388.

*Annual Period of the Total Magnetic Force.*—The following quantities have been obtained from the means, pages 356 and 374, exhibiting the annual periods for the two components freed from secular change :—

| | Jan. | Feb. | March. | April. | May. | June. | July. | Aug. | Sept. | Oct. | Nov. | Dec. |
|---|---|---|---|---|---|---|---|---|---|---|---|---|
| 0·000 | 322 | 121 | 117 | 309 | 212 | 218 | 090 | 000 | 053 | 048 | 233 | 266 |

The accuracy of this result depends chiefly on that for the vertical component, which it resembles in every respect. The total magnetic force is a minimum in August and a maximum in January or December; it is also a secondary minimum in the beginning of March and a maximum in April.*

TABLE LVII.—Variations of the Total Magnetic Force, with reference to the Moon's Age, Declination, and Distance, as deduced from Tables XXIII. and XXXIX.

| Moon's Age. | Variations of Total Force. | Moon's Age. | Variations of Total Force. | After Moon farthest North. | Variations of Total Force. | After Moon farthest North. | Variations of Total Force. | Before and after Perigee. | Variations of Total Force. | Before and after Apogee. | Variations of Total Force. |
|---|---|---|---|---|---|---|---|---|---|---|---|
| Day. | 0·00 | Day. | 0·00 | Day. | 0·00 | Day. | 0·00 | Day. | 0·00 | Day. | 0·00 |
| 15 | 0000 | 0 | 0167 | 0 | 0149 | 14 | 0115 | 7 | 0133 | 7 | 0087 |
| 16 | 0038 | 1 | 0113 | 1 | 0112 | 15 | 0080 | 6 | 0100 | 6 | 0123 |
| 17 | 0063 | 2 | 0125 | 2 | 0120 | 16 | 0090 | 5 | 0000 | 5 | 0066 |
| 18 | 0068 | 3 | 0115 | 3 | 0106 | 17 | 0126 | 4 | 0072 | 4 | 0049 |
| 19 | 0020 | 4 | 0120 | 4 | 0053 | 18 | 0095 | 3 | 0075 | 3 | 0055 |
| 20 | 0120 | 5 | 0146 | 5 | 0002 | 19 | 0055 | 2 | 0074 | 2 | 0090 |
| 21 | 0117 | 6 | 0128 | 6 | 0043 | 20 | 0097 | 1 | 0067 | 1 | 0060 |
| 22 | 0111 | 7 | 0149 | 7 | 0071 | 21 | 0031 | P | 0075 | A | 0080 |
| 23 | 0148 | 8 | 0137 | 8 | 0067 | 22 | 0033 | 1 | 0084 | 1 | 0131 |
| 24 | 0165 | 9 | 0117 | 9 | 0077 | 23 | 0097 | 2 | 0101 | 2 | 0166 |
| 25 | 0153 | 10 | 0020 | 10 | 0033 | 24 | 0000 | 3 | 0079 | 3 | 0125 |
| 26 | 0140 | 11 | 0066 | 11 | 0065 | 25 | 0073 | 4 | 0096 | 4 | 0130 |
| 27 | 0142 | 12 | 0016 | 12 | 0042 | 26 | 0060 | 5 | 0178 | 5 | 0136 |
| 28 | 0084 | 13 | 0033 | 13 | 0114 | 27 | 0109 | 6 | 0127 | 6 | 0120 |
| 29 | 0115 | 14 | 0012 | | | | | 7 | 0091 | 7 | 0084 |

* *Note on the Annual Variation of the Total Magnetic Force.*—In the note, p. 357, it has been mentioned that the observations of the bifilar magnetometer, made at Toronto in 1842, had been discussed, and that the same law had resulted as from the Makerstoun observations. The observations of the bifilar magnetometer made at St Helena, in the four years, 1842–3–4–5, have been examined in a similar manner. The temperature coefficient has been deduced from the bifilar observations, and the observations have been corrected by it. The variations of the horizontal component at St Helena may be considered as the variations of the total magnetic force, as much at least as they are the representatives of the varying magnetic inclination at Toronto and Makerstoun. The mean of the results for the four years (three years only for the first ten weeks) indicates that the horizontal component at St Helena is a maximum in the beginning of June, and a minimum in the beginning of December: this result differs from that obtained by Colonel SABINE from two years of the same observations (chiefly, perhaps, because the results for the separate years are not very consistent among themselves.) In Colonel SABINE's result there appears to be a connection between the intensity and temperature of the air; the magnetic force appearing greatest when the temperature is greatest. Such a result would be in opposition to the well-known connection between the magnetic intensity and mean temperature at different parts of the earth's surface; in that case, the intensity seems greatest where the mean temperature is least. Perhaps, however, the St Helena Observatory is not well situated for the determination of such a connection as a general annual law, since, in the first place, the range of temperature is small (the difference between the mean temperatures of the hottest and coldest months being only 8° Fahr., about ⅓ of the difference at Makerstoun); and, in the second place, the Observatory is placed above extremely magnetic rocks; the whole island indeed is one large magnetic mass. But perhaps the result obtained from the four years' observations is the strongest objection, since it places the maximum and minimum of magnetic intensity at the two times of yearly *mean* temperature.

*Variations of Total Magnetic Force with reference to the Moon's Age.*—It is evident, from the first portion of Table LVII., that the total force is a minimum about opposition and a maximum about conjunction; this will also appear in the following means of groups:—

| | | | |
|---|---|---|---|
| 14 days to 16 days, Full Moon, | 0·000017 | 29 days to 1 day, New Moon, | 0·000132 |
| 17 ..... 20 ... | 0·000068 | 2 ..... 5 days, | 0·000126 |
| 21 ..... 24 ... | 0·000135 | 6 ..... 9 ... | 0·000133 |
| 25 ..... 28 ... | 0·000130 | 10 ..... 13 ... | 0·000034 |

The value of the force does not vary greatly for the 10 days before and the 10 days after conjunction, the mean value being 0·000131; the mean for the remaining 10 days, including opposition, being 0·000034. There is a slight appearance of a secondary minimum at conjunction, the maxima occurring before and after that epoch. The incomplete series of observations for 1843 gave nearly the same result, the secondary minimum at conjunction being better marked.

*Variations of the Total Magnetic Force with reference to the Moon's Declination.*—The following are means of groups of the second portion of Table LVII.:—

| | | | |
|---|---|---|---|
| 27 days to 1 day, Moon farthest North, | 0·000123 | 13 days to 15 days, Moon farthest South, | 0·000103 |
| 2 ..... 5 days, | 0·000070 | 16 ..... 19 ... | 0·000091 |
| 6 ..... 8 ... | 0·000060 | 20 ..... 22 ... | 0·000054 |
| 9 ..... 12 ... | 0·000054 | 23 ..... 26 ... | 0·000058 |

The simple means and the means of groups indicate that the total magnetic force is a maximum when the moon has its greatest north and greatest south declination; it is a minimum between these epochs. This result also was obtained from the incomplete series of observations for 1843.

TABLE LVIII.—Diurnal Variations of the Total Magnetic Force in 1844, as deduced from Tables XXVII. and XLIII.

| Mak. M. T. | Jan. | Feb. | March. | April. | May. | June. | July. | Aug. | Sept. | Oct. | Nov. | Dec. | Year. |
|---|---|---|---|---|---|---|---|---|---|---|---|---|---|
| h. | 0·00 | 0·00 | 0·00 | 0·00 | 0·00 | 0·00 | 0·00 | 0·00 | 0·00 | 0·00 | 0·00 | 0·00 | 0·00 |
| 12 | 0049 | 0077 | 0137 | 0000 | 0015 | 0228 | 0215 | 0031 | 0000 | 0180 | 0000 | 0027 | 0025 |
| 13 | 0074 | 0043 | 0021 | 0093 | 0027 | 0171 | 0178 | 0029 | 0028 | 0145 | 0010 | 0065 | 0019 |
| 14 | 0044 | 0034 | 0000 | 0094 | 0000 | 0166 | 0168 | 0000 | 0011 | 0102 | 0040 | 0000 | 0000 |
| 15 | 0025 | 0026 | 0094 | 0037 | 0021 | 0206 | 0194 | 0082 | 0016 | 0091 | 0078 | 0004 | 0018 |
| 16 | 0000 | 0041 | 0153 | 0049 | 0033 | 0207 | 0226 | 0164 | 0053 | 0000 | 0097 | 0025 | 0032 |
| 17 | 0000 | 0079 | 0115 | 0077 | 0116 | 0228 | 0240 | 0191 | 0106 | 0074 | 0112 | 0035 | 0059 |
| 18 | 0016 | 0077 | 0227 | 0157 | 0162 | 0208 | 0220 | 0183 | 0119 | 0156 | 0147 | 0056 | 0089 |
| 19 | 0033 | 0086 | 0318 | 0197 | 0166 | 0198 | 0171 | 0166 | 0116 | 0250 | 0151 | 0081 | 0106 |
| 20 | 0056 | 0086 | 0336 | 0172 | 0136 | 0149 | 0103 | 0109 | 0121 | 0250 | 0147 | 0076 | 0090 |
| 21 | 0067 | 0063 | 0309 | 0142 | 0104 | 0068 | 0026 | 0066 | 0093 | 0244 | 0108 | 0052 | 0057 |
| 22 | 0058 | 0047 | 0279 | 0128 | 0049 | 0015 | 0002 | 0042 | 0051 | 0245 | 0089 | 0028 | 0031 |
| 23 | 0090 | 0062 | 0335 | 0165 | 0076 | 0000 | 0000 | 0072 | 0077 | 0302 | 0131 | 0049 | 0058 |
| 0 | 0122 | 0111 | 0362 | 0313 | 0158 | 0080 | 0076 | 0125 | 0133 | 0439 | 0276 | 0083 | 0135 |
| 1 | 0183 | 0169 | 0503 | 0344 | 0229 | 0152 | 0176 | 0270 | 0271 | 0490 | 0300 | 0114 | 0212 |
| 2 | 0233 | 0226 | 0618 | 0463 | 0323 | 0246 | 0263 | 0392 | 0377 | 0562 | 0353 | 0166 | 0297 |
| 3 | 0221 | 0263 | 0700 | 0574 | 0406 | 0321 | 0391 | 0524 | 0492 | 0671 | 0469 | 0218 | 0383 |
| 4 | 0221 | 0298 | 0734 | 0607 | 0569 | 0422 | 0498 | 0583 | 0615 | 0656 | 0550 | 0225 | 0443 |
| 5 | 0229 | 0278 | 0782 | 0768 | 0663 | 0465 | 0550 | 0683 | 0612 | 0662 | 0602 | 0224 | 0488 |
| 6 | 0213 | 0292 | 0734 | 0784 | 0679 | 0489 | 0551 | 0688 | 0551 | 0561 | 0546 | 0280 | 0476 |
| 7 | 0200 | 0261 | 0687 | 0669 | 0649 | 0479 | 0561 | 0626 | 0469 | 0565 | 0401 | 0231 | 0428 |
| 8 | 0207 | 0254 | 0585 | 0534 | 0587 | 0444 | 0476 | 0550 | 0391 | 0459 | 0303 | 0221 | 0363 |
| 9 | 0177 | 0161 | 0338 | 0399 | 0472 | 0379 | 0379 | 0387 | 0307 | 0334 | 0195 | 0150 | 0252 |
| 10 | 0090 | 0117 | 0101 | 0329 | 0337 | 0298 | 0311 | 0275 | 0233 | 0279 | 0092 | 0115 | 0160 |
| 11 | 0076 | 0000 | 0217 | 0193 | 0201 | 0238 | 0239 | 0084 | 0146 | 0238 | 0028 | 0077 | 0090 |

*Diurnal Variation of the Total Magnetic Force.*—In the mean for the year the total force is a principal maximum at $5^h\ 20^m$ P.M. and a principal minimum at $2^h\ 10^m$ A.M.; it is a secondary maximum at $7^h\ 10^m$ A.M. and a secondary minimum at $10^h\ 10^m$ A.M. The range from the principal maximum to the principal minimum is 0·000490; the range from the secondary maximum to the secondary minimum is 0·000075, the total force being unity.

In the months of June and July the principal minimum occurs between $10^h$ and $11^h$ A.M. and the secondary minimum about $2^h$ A.M.; the two minima have nearly equal values in the months of May and August; the minimum about $2^h$ A.M. is best marked in all the remaining months of the year. The principal maximum occurs between $4^h$ P.M and $7^h$ P.M. in each month of the year, and earlier, on the whole, in the equinoctial than in the solstitial months.

Leaving the more minute considerations with respect to the variation of the diurnal law with season to be made in connection with another year's observations, we shall only farther at present consider the diurnal variation for the year as obtained from the observations upon the selected 120 and 60 days free from disturbances. The variations for these series deduced from the last columns of Tables XXVIII., XXIX., XLIV., and XLV., and reduced so that the mean for each series equals the mean for the whole series in the last column of Table LVIII., are as follow:—

| Series. | A.M. | $12^h$ | $1^h$ | $2^h$ | $3^h$ | $4^h$ | $5^h$ | $6^h$ | $7^h$ | $8^h$ | $9^h$ | $10^h$ | $11^h$ | $0^h$ | $1^h$ | $2^h$ | $3^h$ | $4^h$ | $5^h$ | $6^h$ | $7^h$ | $8^h$ | $9^h$ | $10^h$ | $11^h$ | P.M. |
|---|---|---|---|---|---|---|---|---|---|---|---|---|---|---|---|---|---|---|---|---|---|---|---|---|---|---|
| 120-day, | 0·000 | 144 | 135 | 140 | 149 | 158 | 172 | 174 | 164 | 133 | 083 | 038 | 033 | 062 | 138 | 201 | 250 | 285 | 306 | 307 | 298 | 283 | 256 | 222 | 180 | |
| 60-day, | 0·000 | 171 | 159 | 156 | 158 | 161 | 175 | 176 | 164 | 140 | 086 | 037 | 022 | 058 | 130 | 199 | 242 | 269 | 288 | 288 | 286 | 270 | 249 | 222 | 194 | |

Both series give nearly the same result; the epochs of maxima and minima are as follow:—

| | | | | |
|---|---|---|---|---|
| 120-day series, | Principal Max. $5^h\ 50^m$ P.M. | Secondary Min. $1^h\ 30^m$ A.M. | Secondary Max. $5^h\ 50^m$ A.M. | Principal Min. $10^h\ 50^m$ A.M. |
| 60-day series, | ..... $5^h\ 50^m$ P.M. | ..... $2^h\ 10^m$ A.M. | ..... $5^h\ 50^m$ A.M. | ..... ..... $10^h\ 50^m$ A.M. |

The principal difference between the results for the complete and undisturbed series consists in the transference of the epochs of principal and secondary minimum; in the complete series the principal minimum occurs at $2^h$ A.M., in the undisturbed series a slightly-marked secondary minimum occurs at that hour, but the principal minimum occurs about $11^h$ A.M., nearly the time of the secondary minimum for the complete series. The range of the variations is much diminished in the selected series, the whole range for the 120-day series being 0·000274, and for the 60-day series only 0·000266, little more than half the range for the whole series. The range from the secondary minimum to the secondary maximum in the 60-day series is only 0·000020, so that the selection of days nearly altogether free from disturbance has the effect here also of nearly obliterating the secondary minimum and maximum.

*Ranges of the Mean Diurnal Variation of the Total Magnetic Force.*—The ranges of the diurnal variation for each month, as deduced from the whole series of observations, are as follow:—

| | Jan. | Feb. | March. | April. | May. | June. | July. | Aug. | Sept. | Oct. | Nov. | Dec. |
|---|---|---|---|---|---|---|---|---|---|---|---|---|
| 0·000 | 233 | 298 | 782 | 784 | 679 | 489 | 561 | 688 | 615 | 671 | 602 | 280 |

The diurnal range of the total force is a principal minimum in January, and a secondary minimum in June; it is a maximum at the equinoxes. There is no doubt, however, that if the diurnal variations for each month were deduced from the selected series of observations, the ranges would be found to obey the same law as that already obtained for the vertical component from the same series. See p. 381.

*Diurnal Variation of the Total Magnetic Force with reference to the Moon's Hour-Angle.*—The following Table contains the variations of the total force, as deduced from the last three columns of Tables XXXI. and XLVII.

TABLE LIX.—Variations of the Total Magnetic Force with reference to the Moon's Hour-Angle, as deduced from Tables XXXI. and XLVII.

| Moon's Hour-Angle. | Lunations. | | | Moon's Hour-Angle. | Lunations. | | | Moon's Hour-Angle. | Lunations. | | |
|---|---|---|---|---|---|---|---|---|---|---|---|
| | Winter. | Summer. | Year. | | Winter. | Summer. | Year. | | Winter. | Summer. | Year. |
| h. | 0·00 | 0·00 | 0·00 | h. | 0·00 | 0·00 | 0·00 | h. | 0·00 | 0·00 | 0·00 |
| 0 | 0022 | 0078 | 0033 | 8 | 0041 | 0000 | 0003 | 16 | 0184 | 0077 | 0113 |
| 1 | 0011 | 0043 | 0010 | 9 | 0039 | 0015 | 0010 | 17 | 0169 | 0082 | 0109 |
| 2 | 0000 | 0038 | 0002 | 10 | 0065 | 0028 | 0030 | 18 | 0123 | 0059 | 0074 |
| 3 | 0003 | 0032 | 0001 | 11 | 0099 | 0036 | 0051 | 19 | 0165 | 0044 | 0088 |
| 4 | 0023 | 0033 | 0011 | 12 | 0147 | 0026 | 0069 | 20 | 0127 | 0030 | 0062 |
| 5 | 0025 | 0028 | 0009 | 13 | 0168 | 0042 | 0088 | 21 | 0147 | 0039 | 0076 |
| 6 | 0030 | 0020 | 0009 | 14 | 0198 | 0071 | 0119 | 22 | 0107 | 0046 | 0060 |
| 7 | 0016 | 0018 | 0000 | 15 | 0198 | 0056 | 0111 | 23 | 0064 | 0052 | 0041 |
| | | | | | | | | 24 | 0074 | 0056 | 0048 |

The variations in Table LIX. give the following epochs of maxima and minima. In the winter group, containing those lunations for which the moon is full when north of the equator—

The maximum occurs about 2 hours after the moon's inferior transit.
The minimum ..... 2 hours after ..... superior transit.

There are appearances of a secondary maximum and minimum, but they are not distinct: the whole range of the mean variations for the group is 0·000200, which is only one-fourth less than the range of the solar diurnal variations in the mean for the year.

In the summer group, there are two nearly equal maxima and two minima—

A maximum occurs about 4 hours after the moon's transit of the inferior meridian.
A minimum ..... 5 ..... before ..... superior .....
A maximum .....when the moon transits the superior meridian.
The minimum ..... about 4 hours before the moon's transit of the inferior meridian.

The range of the variations is only 0·000082.

In the mean for the year, there are only one maximum and one minimum well marked—

The maximum occurs about 2 hours after the moon's transit of the inferior meridian.
The minimum ..... 5 ..... superior .....

Minima actually occur 3 hours and 7 hours after the superior transit, but the intervening maximum is very slightly marked. The range of the variations is 0·000120.

The following mean variations for the year have been obtained from those for the two components, pages 365 and 382, for which the large disturbances were rejected:—

| | $0^h\ 0^m$ | $2^h\ 25^m$ | $4^h\ 20^m$ | $6^h\ 15^m$ | $8^h\ 10^m$ | $10^h\ 5^m$ | $12^h\ 0^m$ | $13^h\ 55^m$ | $15^h\ 50^m$ | $17^h\ 45^m$ | $19^h\ 40^m$ | $21^h\ 35^m$ |
|---|---|---|---|---|---|---|---|---|---|---|---|---|
| 0·0000 \| | 28 | 20 | 19 | 00 | 07 | 25 | 56 | 79 | 66 | 45 | 27 | 32 |

These quantities give the following epochs:—

The principal maximum occurs about 2 hours after the moon's transit of the inferior meridian.
A secondary minimum ..... 5 hours before ..... superior .....
A secondary maximum ..... the time of ..... superior .....
The principal minimum ..... 6 hours after ..... superior .....

The secondary maximum is not well marked; the whole range of the variations is less than 0·000100, the total magnetic force being unity. The elimination of the larger disturbances renders the variation for the year nearly similar in its epochs to that for the summer group; it is probable, therefore, that the differences between the variations for the summer and winter groups is chiefly due to disturbances.

## INTERMITTENT DISTURBANCES.

*Effect of Disturbances on the Yearly Mean for the Total Magnetic Force.*—We obtain the following results from the mean values of the horizontal and vertical components for the year, pages 365 and 384 :—

| | |
|---|---|
| The mean total force, as deduced from the whole series of hourly observations for the year, is less than that deduced from the..... | 120-day series, by 0·000038<br>60-day series, by 0·000039 |

*Effect of Disturbances on the Monthly Mean of the Total Force.*—Using the corrections for the two components of force, pages 365 and 384, we obtain the following quantities, corrections of the means of total force for each month obtained from the 10-day and 5-day series, to the means from the complete series :—

| | Jan. | Feb. | March. | April. | May | June. | July. | Aug. | Sept. | Oct. | Nov. | Dec. |
|---|---|---|---|---|---|---|---|---|---|---|---|---|
| 10 days, | −0·000046 | +0·000050 | −0·000 \| 152 | 030 | 067 | 026 | 030 | 029 | 049 | 091 | 012 | +0·000022 |
| 5 days, | −0·000037 | +0·000052 | −0·000 \| 163 | 052 | 044 | 083 | 028 | 015 | 039 | 079 | 028 | +0·000034 |

From these quantities the effect of disturbance is in general to diminish the value of the force, the greatest diminutions occurring in March and October; the diminution is least near the summer solstice, and the effect is to increase the force in December and February. Portion of these effects is due to consecutive disturbance, such as secular change, but the elimination of that portion would not affect the generality of this conclusion. By subtracting the previous quantities from the monthly mean variations for the total force, p. 395, we would obtain the monthly means as deduced from the 10-day and 5-day series; the resulting means give the same law as that obtained from the means for the whole series.

*Effect of Disturbances on the Hourly Means of the Total Magnetic Force.*—The following are the differences of the hourly means of the total force, or the means as deduced from the whole series *minus* the means as deduced from the 120-day and 60-day series of observations; each series having the same mean value. See Table LVIII., and page 396.

| Whole series *Minus.* | A.M. 12h | 1h | 2h | 3h | 4h | 5h | 6h | 7h | 8h | 9h | 10h | 11h |
|---|---|---|---|---|---|---|---|---|---|---|---|---|
| 120-day series, | −0·000 \| 121 | 116 | 140 | 131 | 126 | 113 | 085 | 058 | 043 | 026 | 007 | +0·000025 |
| 60-day series, | −0·000 \| 146 | 140 | 156 | 140 | 129 | 116 | 087 | 058 | 050 | 029 | 006 | +0·000036 |

| | P.M. 0h | 1h | 2h | 3h | 4h | 5h | 6h | 7h | 8h | 9h | | 10h | 11h |
|---|---|---|---|---|---|---|---|---|---|---|---|---|---|
| 120-day series, | +0·000 \| 073 | 074 | 096 | 133 | 158 | 182 | 169 | 130 | 080 | −0·000004 | −0·000 | 062 | 090 |
| 60-day series, | +0·000 \| 077 | 082 | 098 | 141 | 174 | 200 | 188 | 142 | 093 | +0·000003 | −0·000 | 062 | 104 |

These quantities give the same law of variation. The positive effect of disturbance upon the mean of the total force, is a maximum at $5^h\ 10^m$ P.M.; the negative effect is a maximum at $2^h\ 10^m$ A.M. The effect is zero at $10^h\ 20^m$ A.M., and at $9^h\ 10^m$ P.M.

The effect of disturbance in diminishing the westerly declination, and in increasing the dip, is a maximum at $9^h$ P.M., when the effect on the total force is zero; the effect of disturbance in increasing the westerly declination is a maximum at $10^h$ A.M.; at the same hour there is a secondary maximum of effect in increasing the dip, and at the same hour the effect on the total force is zero. On the contrary, when the effect of disturbances upon the mean total force is a positive maximum,—namely, at $5^h$ P.M., the effect upon the magnetic declination and dip is zero; and when the effect upon the total force is a negative maximum at $2^h$ A.M., the effect upon the magnetic declination and dip is nearly zero; so that, *when the effect of disturbance upon the* direction *of the magnetic force is a maximum, the effect upon its* intensity *is zero, and* vice versa.

It is remarkable, even merely as a coincidence, that the effect of disturbance upon the *direction* of the magnetic force is a maximum when the sun is on or near the magnetic meridian, and zero when nearly at right angles to that plane; while the effect of disturbances upon the *intensity* of the magnetic force is zero when the sun is near the plane of the magnetic meridian, and a maximum when in the plane nearly at right angles to it, for the effect of disturbance differs little at $4^h$ A.M. from that at $2^h$ A.M. when it is a maximum.

TABLE LX.—Ranges for each Civil Day of Magnetic Declination, and of the Horizontal and Vertical Components of Magnetic Force, as obtained from all the Observations (Hourly, Term-Day, or Extra) made in 1844.

| Civil Day. | Declination. | Hor. Comp. | Vert. Comp. | Declination. | Hor. Comp. | Vert. Comp. | Declination. | Hor. Comp. | Vert. Comp. | Declination. | Hor. Comp. | Vert. Comp. | Declination. | Hor. Comp. | Vert. Comp. | Declination. | Hor. Comp. | Vert. Comp. |
|---|---|---|---|---|---|---|---|---|---|---|---|---|---|---|---|---|---|---|
| | ′ | 0·0 | 0·0 | ′ | 0·0 | 0·0 | ′ | 0·0 | 0·0 | ′ | 0·0 | 0·0 | ′ | 0·0 | 0·0 | ′ | 0·0 | 0·0 |
| | JANUARY. | | | MARCH. | | | MAY. | | | JULY. | | | SEPTEMBER. | | | NOVEMBER. | | |
| 1 | 10·88 | 0214 | 0032 | 10·07 | 0232 | 0034 | 19·10 | 0904 | 0167 | 12·78 | 0405 | 0035 | ... | ... | ... | 15·03 | 0266 | 0051 |
| 2 | 18·41 | 0323 | 0061 | 34·22 | 1579 | 0325 | 17·04 | 0526 | 0118 | 13·51 | 0335 | 0035 | 11·57 | 0414 | 0046 | 22·17 | 0552 | 0052 |
| 3 | 5·00 | 0262 | 0027 | ... | ... | ... | 18·72 | 0619 | 0175 | 10·83 | 0361 | 0035 | 12·09 | 0372 | 0043 | ... | ... | ... |
| 4 | 12·26 | 0221 | 0059 | 34·94 | 0797 | 0226 | 8·43 | 0396 | 0024 | 13·81 | 0347 | 0044 | 12·33 | 0412 | 0089 | 18·53 | 0224 | 0062 |
| 5 | 33·79 | 0473 | 0114 | 33·76 | 1397 | 0262 | ... | ... | ... | 10·94 | 0350 | 0030 | 10·16 | 0260 | 0038 | 9·67 | 0144 | 0038 |
| 6 | 25·29 | 0694 | 0072 | 29·12 | 0690 | 0336 | 13·58 | 0350 | 0123 | 12·48 | 0424 | 0021 | 7·56 | 0342 | 0037 | 6·14 | 0228 | 0063 |
| 7 | ... | ... | ... | 36·23 | 1249 | 0304 | 9·52 | 0336 | 0049 | ... | ... | ... | 12·87 | 0423 | 0054 | 8·22 | 0151 | 0015 |
| 8 | 13·02 | 0729 | 0075 | 27·29 | 0762 | 0301 | 21·58 | 0811 | 0197 | 23·08 | 0694 | 0157 | ... | ... | ... | 8·58 | 0213 | 0026 |
| 9 | 9·54 | 0560 | 0071 | 24·06 | 0606 | 0183 | 15·29 | 0444 | 0198 | 7·47 | 0494 | 0056 | 15·47 | 0329 | 0065 | 6·88 | 0186 | 0026 |
| 10 | 13·11 | 0599 | 0066 | ... | ... | ... | 8·46 | 0297 | 0068 | 9·27 | 0363 | 0044 | 9·54 | 0253 | 0073 | ... | ... | ... |
| 11 | 8·34 | 0210 | 0021 | 13·48 | 0230 | 0032 | 10·62 | 0364 | 0039 | 9·99 | 0430 | 0032 | 10·64 | 0343 | 0031 | 28·31 | 0973 | 0128 |
| 12 | 16·34 | 0336 | 0022 | 12·60 | 0344 | 0088 | ... | ... | ... | 8·63 | 0403 | 0035 | 11·50 | 0325 | 0026 | 20·62 | 0448 | 0174 |
| 13 | 5·33 | 0091 | 0022 | 9·48 | 0260 | 0057 | 10·05 | 0326 | 0042 | 14·36 | 0602 | 0060 | 12·92 | 0384 | 0022 | 13·57 | 0168 | 0033 |
| 14 | ... | ... | ... | 6·91 | 0297 | 0013 | 18·38 | 0459 | 0056 | ... | ... | ... | 18·77 | 0419 | 0063 | 12·17 | 0210 | 0058 |
| 15 | 5·54 | 0123 | 0011 | 8·76 | 0150 | 0023 | 23·11 | 0701 | 0212 | 14·18 | 0489 | 0051 | ... | ... | ... | 6·03 | 0169 | 0018 |
| 16 | 6·45 | 0148 | 0016 | 9·22 | 0199 | 0016 | 10·83 | 0400 | 0078 | 13·58 | 0410 | 0058 | 16·91 | 0344 | 0040 | 68·49 | 4529 | 0896 |
| 17 | 9·41 | 0178 | 0027 | ... | ... | ... | 9·01 | 0295 | 0042 | 15·17 | 0511 | 0068 | 18·29 | 0553 | 0090 | ... | ... | ... |
| 18 | 17·37 | 0249 | 0056 | 20·95 | 0311 | 0060 | 9·40 | 0361 | 0026 | 18·65 | 0454 | 0088 | 14·95 | 0382 | 0056 | 33·19 | 0923 | 0074 |
| 19 | 3·73 | 0143 | 0044 | 16·85 | 0794 | 0061 | ... | ... | ... | 12·54 | 0518 | 0022 | 24·80 | 0438 | 0032 | 17·37 | 0400 | 0122 |
| 20 | 8·77 | 0209 | 0020 | 12·60 | 0358 | 0037 | 8·41 | 0295 | 0025 | 12·28 | 0389 | 0030 | 38·86 | 0739 | 0245 | 14·91 | 0186 | 0027 |
| 21 | .. | ... | ... | 9·48 | 0263 | 0044 | 23·34 | 0392 | 0051 | ... | ... | ... | 12·23 | 0330 | 0090 | 5·65 | 0179 | 0026 |
| 22 | 6·33 | 0218 | 0060 | 12·04 | 0297 | 0019 | 18·14 | 0876 | 0296 | 7·93 | 0321 | 0024 | ... | ... | ... | 76·14 | 4480 | 0674 |
| 23 | 8·22 | 0162 | 0044 | 9·53 | 0325 | 0023 | 43·13 | 1294 | 0283 | 10·48 | 0227 | 0034 | 13·25 | 0459 | 0045 | 53·69 | 1047 | 0255 |
| 24 | 3·32 | 0116 | 0023 | ... | ... | ... | 8·68 | 0627 | 0067 | 10·60 | 0294 | 0023 | 11·59 | 0242 | 0056 | ... | ... | ... |
| 25 | 20·29 | 0500 | 0221 | 9·91 | 0259 | 0032 | 17·50 | 0634 | 0068 | 23·90 | 0644 | 0153 | 29·69 | 0629 | 0176 | 9·32 | 0192 | 0042 |
| 26 | 7·63 | 0136 | 0024 | 8·44 | 0301 | 0028 | ... | ... | ... | 9·39 | 0486 | 0074 | 49·56 | 1040 | 0524 | 4·27 | 0113 | 0015 |
| 27 | 11·32 | 0263 | ..... | 8·07 | 0228 | 0082 | 12·53 | 0556 | 0067 | 21·16 | 0673 | 0101 | 22·84 | 0848 | 0142 | 14·30 | 0367 | 0015 |
| 28 | ... | ... | ... | 17·02 | 0417 | 0106 | 13·06 | 0421 | 0052 | ... | ... | ... | 17·58 | 0315 | 0161 | 18·76 | 0385 | 0127 |
| 29 | 7·47 | 0153 | 0054 | 39·01 | 1184 | 0293 | 11·48 | 0368 | 0034 | 11·94 | 0428 | 0082 | ... | ... | ... | 14·33 | 0188 | 0038 |
| 30 | 8·33 | 0211 | 0043 | 49·40 | 2573 | 0585 | 9·48 | 0336 | 0021 | 10·41 | 0427 | 0031 | 27·61 | 0750 | 0381 | 4·95 | 0125 | 0018 |
| 31 | 18·55 | 0426 | 0054 | ... | ... | ... | 11·66 | 0350 | 0025 | 21·45 | 0774 | 0048 | | | | | | |
| | FEBRUARY. | | | APRIL. | | | JUNE. | | | AUGUST. | | | OCTOBER. | | | DECEMBER. | | |
| 1 | 24·89 | 0847 | 0123 | 16·14 | 0739 | 0207 | 14·82 | 0413 | 0032 | 21·05 | 1833 | 0254 | 80·61 | 2337 | 0639 | ... | ... | ... |
| 2 | 23·90 | 0725 | 0197 | 23·14 | 0630 | 0236 | ... | ... | ... | 22·39 | 0692 | 0196 | 25·19 | 0738 | 0247 | 12·07 | 0144 | 0016 |
| 3 | 19·89 | 0830 | 0128 | 30·11 | 1163 | 0229 | 10·20 | 0350 | 0021 | 17·69 | 0599 | 0156 | 16·67 | 0321 | 0090 | 4·53 | 0162 | 0018 |
| 4 | ... | ... | ... | 16·73 | 0428 | 0128 | 8·41 | 0260 | 0033 | ... | ... | ... | 11·83 | 0293 | 0049 | 29·13 | 0412 | 0053 |
| 5 | 34·09 | 0774 | 0181 | 31·08 | 0343 | 0060 | 11·93 | 0417 | 0023 | 9·94 | 0395 | 0068 | 13·61 | 0297 | 0051 | 10·04 | 0231 | 0066 |
| 6 | 16·55 | 0736 | 0114 | 32·13 | 0521 | 0220 | 12·49 | 0360 | 0040 | 9·12 | 0354 | 0041 | ... | ... | ... | 4·71 | 0179 | 0010 |
| 7 | 25·33 | 0531 | 0068 | ... | ... | ... | 12·99 | 0307 | 0037 | 10·09 | 0214 | 0023 | 11·06 | 0440 | 0030 | 5·92 | 0105 | 0015 |
| 8 | 17·04 | 0508 | 0134 | 13·53 | 0315 | 0037 | 11·65 | 0396 | 0030 | 12·11 | 0276 | 0034 | 12·41 | 0448 | 0050 | ... | ... | ... |
| 9 | 10·36 | 0245 | 0084 | 9·87 | 0353 | 0028 | ... | ... | ... | 22·26 | 0993 | 0250 | 8·75 | 0204 | 0024 | 3·54 | 0109 | 0010 |
| 10 | 17·62 | 0272 | 0098 | 14·75 | 0381 | 0025 | 11·33 | 0428 | 0039 | 13·67 | 0606 | 0071 | 7·04 | 0211 | 0017 | 8·20 | 0157 | 0028 |
| 11 | ... | ... | ... | 16·04 | 0224 | 0050 | 10·78 | 0402 | 0082 | ... | ... | ... | 6·73 | 0245 | 0017 | 7·60 | 0120 | 0015 |
| 12 | 8·10 | 0209 | 0024 | 9·68 | 0214 | 0022 | 11·53 | 0291 | 0028 | 12·24 | 0323 | 0053 | 8·50 | 0256 | 0014 | 3·55 | 0105 | 0010 |
| 13 | 5·20 | 0168 | 0021 | 10·49 | 0230 | 0030 | 13·56 | 0288 | 0032 | 14·63 | 0262 | 0043 | ... | ... | ... | 4·14 | 0123 | 0015 |
| 14 | 3·10 | 0104 | 0012 | ... | ... | ... | 12·48 | 0245 | 0032 | 10·10 | 0239 | 0017 | 11·21 | 0223 | 0017 | 17·54 | 0596 | 0245 |
| 15 | 8·52 | 0155 | 0040 | 15·83 | 0427 | 0041 | 10·56 | 0400 | 0036 | 9·64 | 0351 | 0032 | 9·42 | 0192 | 0029 | ... | ... | ... |
| 16 | 10·36 | 0123 | 0016 | 8·61 | 0197 | 0049 | ... | ... | ... | 28·49 | 0484 | 0035 | 9·39 | 0256 | 0024 | 15·80 | 0431 | 0071 |
| 17 | 13·90 | 0351 | 0039 | 42·23 | 2272 | 0587 | 20·67 | 0581 | 0124 | 14·41 | 0482 | 0058 | 10·89 | 0244 | 0049 | 4·91 | 0105 | 0024 |
| 18 | ... | ... | ... | 16·47 | 0767 | 0151 | 14·18 | 0554 | 0080 | ... | ... | ... | 11·28 | 0256 | 0025 | 9·32 | 0301 | 0018 |
| 19 | 3·36 | 0115 | 0013 | 8·81 | 0392 | 0033 | 12·62 | 0329 | 0026 | 11·28 | 0347 | 0027 | 7·88 | 0304 | 0028 | 21·46 | 0365 | 0062 |
| 20 | 4·89 | 0099 | 0033 | 10·50 | 0342 | 0021 | 11·23 | 0510 | 0054 | 9·88 | 0399 | 0029 | ... | ... | ... | 32·83 | 0703 | 0108 |
| 21 | 5·56 | 0139 | 0014 | ... | ... | ... | 19·99 | 0448 | 0090 | 11·26 | 0385 | 0025 | 56·05 | 2414 | 0682 | 24·98 | 0458 | 0135 |
| 22 | 9·41 | 0449 | 0064 | 10·67 | 0351 | 0035 | 9·46 | 0270 | 0044 | 23·00 | 0591 | 0207 | 17·51 | 0256 | 0049 | ... | ... | ... |
| 23 | 7·45 | 0130 | 0034 | 11·26 | 0347 | 0064 | ... | ... | ... | 34·41 | 1158 | 0315 | 15·72 | 0252 | 0098 | 6·66 | 0130 | 0026 |
| 24 | 5·77 | 0160 | 0013 | 10·97 | 0361 | 0035 | 9·26 | 0284 | 0030 | 18·28 | 0409 | 0125 | 14·09 | 0214 | 0067 | 4·84 | 0111 | 0016 |
| 25 | ... | ... | ... | 47·93 | 1842 | 0461 | 12·53 | 0314 | 0042 | ... | ... | ... | 50·94 | 0805 | 0286 | 5·18 | 0130 | 0016 |
| 26 | 7·70 | 0122 | 0022 | 25·28 | 1070 | 0244 | 13·37 | 0388 | 0034 | 12·46 | 0316 | 0055 | 49·78 | 1306 | 0304 | 18·14 | 0293 | 0044 |
| 27 | 7·27 | 0154 | 0028 | 32·16 | 1186 | 0223 | 9·78 | 0307 | 0038 | 12·05 | 0350 | 0036 | ... | ... | ... | 9·31 | 0388 | 0034 |
| 28 | 21·35 | 0699 | 0084 | ... | ... | ... | 10·55 | 0367 | 0031 | 12·47 | 0379 | 0043 | 13·33 | 0284 | 0135 | 13·76 | 0326 | 0021 |
| 29 | 29·16 | 0882 | 0239 | 18·70 | 0704 | 0121 | 18·53 | 0596 | 0046 | 19·11 | 0491 | 0170 | 17·11 | 0489 | 0064 | ... | ... | ... |
| 30 | | | | 13·48 | 0409 | 0112 | ... | ... | ... | 28·20 | 0918 | 0295 | 11·42 | 0252 | 0026 | 42·23 | 1112 | 0174 |
| 31 | | | | | | | | | | 27·45 | 0515 | 0214 | 11·61 | 0325 | 0050 | 16·37 | 0413 | 0106 |

As a very careful watch was maintained over the smallest irregularities of motion in the declination, bifilar, and balance magnets, throughout the whole of the year 1844, it is believed that the preceding Table contains a near approximation to the absolute ranges of the three magnetic elements for each civil observation-day of the year 1844.

TABLE LXI.—List of Auroræ seen at Makerstoun in the year 1844.

| Moon's Age. | Date, 1844. | Character. | Moon's Age. | Date, 1844. | Character. |
|---|---|---|---|---|---|
| d. | d. h. h. | | d. | d. h. h. | |
| 23 | Feb. 11 13—14 | Faint. | 25 | Aug. 9 11 | Faint. |
| 4 | 22 8 | Id. | 20 | Oct. 2 8—10 | Low belt of light. |
| 13 | March 2 9 | Id. | 23 | 5 10—11 | Faint. |
| 18 | 7 8—10 | Arch with Streamers. | 10 | 20 14—18 | Vivid. |
| 20 | 9 13 | Rather bright light. | 1 | Nov. 11 6—13 | Arch and Streamers. |
| 23 | 12 11 | Faint. | 2 | 12 14 | Faint. |
| 12 | 29 11—16 | Vivid. | 3 | 13 10 | Id. |
| 19 | April 5 12—14 | Arch with Streamers. | 6 | 16 10—12 | Arch, Streamers, &c. |
| 0 | 17 11—12 | Streamers and homogeneous light. | 8 | 18 9 | Faint. |
| 21 | May 8 11—12 | Faint. | 14 | 24 13 | Portion of an arch. |
| 4 | 21 12 | Id. | 24 | Dec. 4 8 | Faint. |
| 5 | 22 11 | Id. | 20 | 29 10—14 | Vivid. |
| 18 | Aug. 2 14 | Id. | 22 | 31 15 | Faint. |

Several of the auroræ noted faint were marked as somewhat uncertain, on account of remaining twilight or clouds; there can be little doubt, however, that in every case they were real auroræ, as they were accompanied by more or less marked magnetic disturbances.

## THE AURORA BOREALIS.

The previous Table contains a list of all the auroræ observed at Makerstoun in the year 1844. The number is too small to expect from it alone any general results; but as it is believed that a discussion of the number seen gives nearly the same results as will be obtained from more extensive series, the conclusions are stated here.

The number of auroræ boreales seen at Makerstoun in 1844 was 26. The numbers seen in each month were as follow:—

| Jan. | Feb. | March. | April. | May. | June. | July. | Aug. | Sept. | Oct. | Nov. | Dec. |
|---|---|---|---|---|---|---|---|---|---|---|---|
| 0 | 2 | 5 | 2 | 3 | 0 | 0 | 2 | 0 | 3 | 6 | 3 |

The number is zero in June and July; the shortness of the night and brightness of the twilight would of themselves diminish the number observed in these months; for the opposite reason we should expect a greater number about the winter solstice: this, however, is not the case,—the greatest number occurs in the months of March and November. Between the summer solstices of 1843 and 1848, 5 years, 85 auroræ were seen at Makerstoun, which, considering the year in 4 quarters each of which has a solstice or equinox at its centre, occurred as follow:—

Vernal equinox, 32; Summer solstice, 6; Autumnal equinox, 23; Winter solstice, 24.

Although the quarter at the winter solstice is so much more favourable for seeing auroræ, on account of the greater length of the night, the average number at the equinoxes is greatest.

This result was long ago obtained by Mairan in his Traité de l'Aurore Boréale, and has lately been obtained by M. Hansteen from observations of nearly 300 auroræ seen in the years 1837–1846 at Christiania.* It is, of course, partly accidental, that there is an approximation to the law distinctly evident in the single year's observations for 1844: the fact is stated chiefly in order to point out its connection with a result of the previous discussions. The law of the frequency of auroræ is the same as that of the intensity

* Mémoires de l'Académie Royale de Belgique, tome xx. Kämtz, also, in his Complete Course of Meteorology (translation by Walker, p. 458), gives a Table, comprehending 3253 auroræ. The following are the numbers by Kämtz and Hansteen:—

| | Jan. | Feb. | March. | April. | May. | June. | July. | Aug. | Sept. | Oct. | Nov. | Dec. |
|---|---|---|---|---|---|---|---|---|---|---|---|---|
| Kämtz, ..... | 229 | 307 | 440 | 312 | 184 | 65 | 87 | 217 | 405 | 497 | 285 | 225 |
| Hansteen, ... | 29 | 31 | 47 | 34 | 2 | 0 | 0 | 17 | 35 | 33 | 34 | 23 |

of magnetic disturbances; the latter have their greatest value near the equinoxes, and their least value near the solstices.

When the numbers for 1844 are combined with reference to the moon's age into four quarters, two of which have the epochs of new and full moon in the middle, we obtain the average for each day of the moon's age as follows:—

$27^d - 3^d$ New Moon,... 0·40. $4^d - 11^d$... 0·75. $12^d - 18^d$ Full Moon,... 0·86. $19^d - 26^d$... 1·38.

The same law of variation is obtained from the 91 auroræ seen between January 1843 and June 1848; these give the following mean numbers:—

$27^d - 3^d$ New Moon,... 1·90. $4^d - 11^d$...2·62. $12^d - 18^d$ Full Moon,... 3·43. $19^d - 26^d$... 4·00.

If we suppose that the number of auroræ should be the same at all ages of the moon, then we would expect, that on account of the great number of faint auroræ rendered invisible by the moonlight, the greatest number would be seen about new moon. This is not the case; the greatest number has been seen in the quarter intermediate between full moon and new moon; and this conclusion, it is believed, will be obtained from larger series of observations. Since, then, the greatest number of auroræ are seen between full and new moon, it is certain that the greatest number occur nearer full moon than the epoch of visible maximum; and it is probable that the greatest number actually occurs at full moon, though the moonlight will always render a direct determination of the fact impossible.* It appears also from Table LXI., that the greatest numbers of auroræ occur before midnight. As actual measures of the intensity cannot be easily taken, it can only be stated as a generally observed fact, that the maximum brilliancy of auroræ occurs between $8^h$ and $11^h$ P.M. Both the probable result for the moon's age and the other result for the diurnal law, agree with the laws deduced for the magnetic disturbance in the preceding pages; the magnetic disturbance is a maximum at full moon, and the disturbance of the *direction* of the magnetic force is a maximum about $9^h\ 10^m$ P.M., the time of maximum frequency and intensity of the aurora; there can be little hesitation, therefore, in saying, that the laws of the aurora borealis may be concluded from those for the magnetic disturbance, and *vice versa*. In every case of *observed* disturbance, including disturbances of the most minute character, in the year 1844, when the sky was sufficiently free from clouds and moonlight, and twilight absent, the aurora was seen; this remark, I believe, will apply to the observations in other years. It is difficult, indeed, to understand the cause of the doubt which remained so long with respect to the fact of this simultaneity; some farther evidences of its generality may be noticed at another time.

* It is worth referring to the past year, as giving an illustration of the law of aurora and disturbance, as related to the moon's age. The following is a list of all the auroræ seen at Makerstoun, in the year between the solstices of 1847 and 1848:—

| | | | | | |
|---|---|---|---|---|---|
| 1847. | Aug. 22. | Faint Aurora,..... | 3 | days before | Full Moon. |
| | Sept. 27. | Brilliant Aurora,..... | 3 | ... after | ..... |
| | ... 29. | Idem. | 5 | ... after | ..... |
| | Oct. 24. | Idem. | 1 | ... after | ..... |
| | Nov. 19. | Idem. | 3 | ... before | ..... |
| | Dec. 20. | Idem. | 1 | ... before | ..... |
| 1848. | Feb. 20. | Idem. | 1 | ... after | ..... |
| | ... 21. | Idem. | 2 | ... after | ..... |
| | ... 22. | Idem. | 3 | ... after | ..... |
| | Mar. 17. | Faint Aurora,..... | 2 | ... before | ..... |
| | ... 19. | Brilliant Aurora, ..... | 0 | ... ..... | ..... |
| | ... 21. | Idem. | 2 | ... after | ..... |
| | ... 24. | Faint Aurora,..... | 5 | ... after | ..... |
| | Apr. 17. | Brilliant Aurora, ..... | 1 | ... before | ..... .... |
| | 29. | Rather Faint Aurora,..... | 11 | ... after | ..... |
| | May 10. | Faint Aurora, ..... | 8 | ... before | ..... |
| | 18. | Brilliant Aurora, ..... | 0 | ... ..... | ..... |

The auroræ marked brilliant were the most beautiful and vivid, despite the moonlight, ever observed at Makerstoun, and they were accompanied by magnetic disturbances of the same character,—the largest, it is believed, ever observed.

Neglecting the faint auroræ, it will be seen that in 8 lunations brilliant auroræ were observed within three days of full moon, only one brilliant aurora having been seen at Makerstoun farther from full moon,—namely, that of September 29. It is conceived that these observations of themselves give a great *probability* to the conclusion, that the maximum for the aurora and magnetic disturbance is at full moon. It is not, of course, supposed that brilliant auroræ occur only near full moon, but that they occur more frequently at that than at any other epoch; it should be remembered that what may be considered a vivid aurora in the absence of moonlight, would become faint in its presence, and *vice versa*.

# ABSTRACTS OF THE RESULTS

OF THE

# METEOROLOGICAL OBSERVATIONS,

MADE AT THE OBSERVATORY OF

GENERAL SIR T. M. BRISBANE, BART.,

MAKERSTOUN.

1844.

The observations of the dry and wet bulb thermometers were usually made about $1^m$ before the hour of Göttingen mean time, that is about $9^m$ after the Makerstoun hour; the observations of the barometer were made about $1^m$ or $2^m$ after the hour of Göttingen mean time, that is about $11^m$ or $12^m$ after the hour at Makerstoun. The hour, astronomical reckoning, without the additional minutes, of Makerstoun mean time is given in the Tables: in the remarks, the observation has been supposed to be made $10^m$ after the Makerstoun hour, and civil reckoning is used.

TABLE I.—Daily, Weekly, and Monthly Means of the Temperature of the Air, as deduced from the readings of the Dry Bulb Thermometer, for 1844.

| Civil. Day. | Jan. | Feb. | March. | April. | May. | June. | July. | Aug. | Sept. | Oct. | Nov. | Dec. |
|---|---|---|---|---|---|---|---|---|---|---|---|---|
| | ° | ° | ° | ° | ° | ° | ° | ° | ° | ° | ° | ° |
| 1 | 29·8 | 29·3 | 38·0 | 44·2 | 52·1 | 48·2 | 51·9 | 55·3 | [57·3] | 52·8 | 45·6 | [38·5] |
| 2 | 25·8 | 31·0 | 36·4 | 46·5 | 54·5 | [50·8] | 54·1 | 55·0 | 58·8 | 53·0 | 43·9 | 37·0 |
| 3 | 33·8 | 30·2 | [34·8] | 44·5 | 51·3 | 51·6 | 53·4 | 51·0 | 54·4 | 54·1 | [41·2] | 36·2 |
| 4 | 34·7 | [28·5] | 34·5 | 40·0 | 45·8 | 53·4 | 49·9 | [54·9] | 58·6 | 49·5 | 42·5 | 32·1 |
| 5 | 45·4 | 26·0 | 30·8 | 38·9 | [51·2] | 56·1 | 53·0 | 57·6 | 58·3 | 45·1 | 42·7 | 26·0 |
| 6 | 42·5 | 23·1 | 32·5 | 39·2 | 55·1 | 60·1 | 52·6 | 55·7 | 58·1 | [47·0] | 43·0 | 22·3 |
| 7 | [38·5] | 31·4 | 32·7 | [44·3] | 51·2 | 58·2 | [53·4] | 54·6 | 60·7 | 41·1 | 41·2 | 24·0 |
| 8 | 36·8 | 32·8 | 34·9 | 48·2 | 49·2 | 59·2 | 54·6 | 55·5 | [56·1] | 52·8 | 43·8 | [27·7] |
| 9 | 33·6 | 34·8 | 44·7 | 51·9 | 50·1 | [57·2] | 54·5 | 54·2 | 54·4 | 49·2 | 44·7 | 30·6 |
| 10 | 38·2 | 32·2 | [36·8] | 47·8 | 47·2 | 54·3 | 56·0 | 52·2 | 52·5 | 52·3 | [41·8] | 32·8 |
| 11 | 40·3 | [34·6] | 40·1 | 45·2 | 49·3 | 54·6 | 56·2 | [54·5] | 52·6 | 49·4 | 39·1 | 30·8 |
| 12 | 41·6 | 31·2 | 34·3 | 43·8 | [50·4] | 57·1 | 54·1 | 55·6 | 51·8 | 49·8 | 39·6 | 30·5 |
| 13 | 34·5 | 34·8 | 34·4 | 48·4 | 55·9 | 58·3 | 52·5 | 54·3 | 50·4 | [49·7] | 42·7 | 29·6 |
| 14 | [35·2] | 41·6 | 36·0 | [46·8] | 51·0 | 54·6 | [53·2] | 55·5 | 52·0 | 49·3 | 41·5 | 34·4 |
| 15 | 27·9 | 42·8 | 33·2 | 49·8 | 48·7 | 53·0 | 50·3 | 55·0 | [51·4] | 48·7 | 49·5 | [34·2] |
| 16 | 31·1 | 40·0 | 33·0 | 44·6 | 49·3 | [52·8] | 53·7 | 54·5 | 57·3 | 48·6 | 50·4 | 35·7 |
| 17 | 36·0 | 40·8 | [35·2] | 48·8 | 41·9 | 50·5 | 52·7 | 52·3 | 50·1 | 47·8 | [48·1] | 37·5 |
| 18 | 41·6 | [35·6] | 31·7 | 47·2 | 39·9 | 51·2 | 54·5 | [54·1] | 47·0 | 43·5 | 50·2 | 37·7 |
| 19 | 39·7 | 35·5 | 39·9 | 51·0 | [45·2] | 49·3 | 53·0 | 53·7 | 48·7 | 38·0 | 49·8 | 32·3 |
| 20 | 34·3 | 29·1 | 37·5 | 52·8 | 46·1 | 51·8 | 53·7 | 55·9 | 47·4 | [40·3] | 47·4 | 23·8 |
| 21 | [37·1] | 25·7 | 35·9 | [48·8] | 47·7 | 57·4 | [58·3] | 53·0 | 42·9 | 37·8 | 38·3 | 28·5 |
| 22 | 37·2 | 23·3 | 42·2 | 47·0 | 46·1 | 58·4 | 62·8 | 51·9 | [46·6] | 39·2 | 31·8 | [30·5] |
| 23 | 35·7 | 28·9 | 40·6 | 48·1 | 46·1 | [54·2] | 63·8 | 54·5 | 43·8 | 35·7 | 39·4 | 34·7 |
| 24 | 34·4 | 31·0 | [42·6] | 46·7 | 48·4 | 58·6 | 61·8 | 53·0 | 49·1 | 35·5 | [37·6] | 32·3 |
| 25 | 42·3 | [29·5] | 42·3 | 49·0 | 48·6 | 50·6 | 63·8 | [52·3] | 47·6 | 44·3 | 30·6 | 31·2 |
| 26 | 41·0 | 29·1 | 45·4 | 47·5 | [46·8] | 48·7 | 60·6 | 52·7 | 55·9 | 46·4 | 37·4 | 32·1 |
| 27 | 47·5 | 29·2 | 49·1 | 45·7 | 46·2 | 51·1 | 63·4 | 49·1 | 57·3 | [43·1] | 48·2 | 31·3 |
| 28 | [40·3] | 35·2 | 42·5 | [48·2] | 45·1 | 55·2 | [58·5] | 52·6 | 53·9 | 40·5 | 46·1 | 29·5 |
| 29 | 42·2 | 36·5 | 47·5 | 48·8 | 46·2 | 53·6 | 56·4 | 54·5 | [53·4] | 44·3 | 42·1 | [32·1] |
| 30 | 38·5 | | 43·8 | 46·0 | 47·8 | [53·2] | 52·0 | 57·1 | 47·8 | 47·6 | 37·7 | 35·2 |
| 31 | 30·5 | | [44·8] | | 47·6 | | 54·8 | 60·3 | | 47·8 | | 34·4 |
| Mean | 36·92 | 32·22 | 38·23 | 46·60 | 48·46 | 54·20 | 55·56 | 54·32 | 52·46 | 45·71 | 42·66 | 31·63 |

The *observations* of the dry and wet bulb thermometers, from pages 172–308, are not corrected for the errors of the thermometers; the corrections have been applied for the above and following Tables.

*Annual Variation of Temperature.*—The monthly means at the foot of Table I. are slightly different from the true monthly means, on account of the want of observations on the Sundays; the difference, however, may be obtained with sufficient accuracy from the observations of the register maximum and minimum thermometers. The monthly mean temperatures deduced from all the observations of the register thermometers are as follow:—

| Jan. | Feb. | March. | April. | May. | June. | July. | Aug. | Sept. | Oct. | Nov. | Dec. |
|---|---|---|---|---|---|---|---|---|---|---|---|
| 36°·06 | 32°·73 | 38°·73 | 47°·25 | 48°·27 | 55°·20 | 56°·06 | 55°·63 | 52°·86 | 46°·36 | 42°·07 | 32°.14 |

when the observations of the register thermometers on Sundays are omitted, the means are—

| | | | | | | | | | | | |
|---|---|---|---|---|---|---|---|---|---|---|---|
| 36°·63 | 32°·47 | 38°·60 | 47°·08 | 48°·69 | 55°·26 | 56°·07 | 55°·87 | 53°·02 | 46°·33 | 41°·88 | 31°·73 |

The differences between the two series are—

| | | | | | | | | | | | |
|---|---|---|---|---|---|---|---|---|---|---|---|
| +0°·43 | +0°·26 | +0°·13 | +0°·17 | +0°·03 | −0°·06 | −0°·01 | −0°·24 | −0°·16 | +0°·03 | +0°·19 | +0°·41 |

When these differences which are due to the temperatures on Sundays are applied as corrections to the means at the foot of Table I., we obtain the following as the mean temperatures for each month of 1844 :—

| Jan. | Feb. | March. | April. | May. | June. | July. | Aug. | Sept. | Oct. | Nov. | Dec. |
|---|---|---|---|---|---|---|---|---|---|---|---|
| 37°·35 | 32°·48 | 38°·36 | 46°·77 | 48°·49 | 54°·14 | 55°·55 | 54°·08 | 52°·30 | 45°·74 | 42°·85 | 32°·04 |

The temperature of the air in 1844 was a maximum in July and a minimum in December and February. The variation of temperature for 1844 has the mean form; the three months having the highest mean temperature are June, July, and August, and the three having the lowest mean temperature are December, January, and February; the means for the meteorological quarters are—

| | | | | | |
|---|---|---|---|---|---|
| Winter, | Dec., Jan., Feb., ... | 33°·99 | Summer, | June, July, Aug., | 54°·59 |
| Spring, | March, April, May, | 44°·52 | Autumn, | Sept., Oct., Nov., | 45°·04 |

*The mean temperature for the year* 1844 = 45°·04

*Differences of the Daily Mean Temperatures from the Monthly Means.*—The following are the average differences for each month of 1844 :—

| Jan. | Feb. | March. | April. | May. | June. | July. | Aug. | Sept. | Oct. | Nov. | Dec. |
|---|---|---|---|---|---|---|---|---|---|---|---|
| 4°·30 | 4°·20 | 4°·43 | 2°·62 | 2°·69 | 3°·00 | 3°·33 | 1°·62 | 2°·07 | 4°·50 | 3°·90 | 3°·20 |

The difference is least in the months during which the sun is north of the equator: the mean for the six winter months, October–March, being 4°·09, and for the six summer months, April–September, being 2°·55. The oscillations of the daily mean temperature do not appear to be at all related to the variations of the diurnal range.

*Approximations to the Daily Mean Temperature.*—The following are the mean errors, for each month of 1844, of the mean temperature for a civil day, as obtained from the observations of the self-registering thermometers by the formulæ

$$t = \frac{m_1 + M}{2} + c \quad \text{and } t = \frac{\frac{m_1 + m_2}{2} + M}{2} + c$$

where $t$ is the approximate mean temperature for the civil day for which $m_1$ is the minimum temperature of the morning, $m_2$ is the minimum temperature on the morning following; M is the maximum temperature, and $c$ is the correction of the *monthly* mean, obtained by the previous portions of the formulæ, to the true mean, (see Table IV.)

| | Jan. | Feb. | March. | April. | May. | June. | July. | Aug. | Sept. | Oct. | Nov. | Dec. |
|---|---|---|---|---|---|---|---|---|---|---|---|---|
| 1st formula, | 1°·40 | 1°·34 | 1°·05 | 1°·13 | 1°·29 | 1°·06 | 0°·75 | 0°·97 | 1°·17 | 1°·22 | 1°·69 | 1°·01 |
| 2d formula, | 0°·97 | 0°·99 | 1°·22 | 0°·82 | 1°·04 | 0°·98 | 0°·61 | 0°·92 | 1°·10 | 0°·91 | 1°·05 | 0°·60 |

The average of the errors by the first formula is 1°·17, and by the second it is 0°·93; the second formula is therefore superior to the first; the probable error by the second formula does not exceed one degree in any month. The values of the corrections $c$ may be determined from two or three years' observation. It is probable that better approximations to the mean temperature of the *astronomical* day would be obtained by means of the formula

$$t = \frac{\frac{M_1 + M_2}{2} + m}{2} + c$$

where $M_1$ and $M_2$ are the maxima near the commencement and near the termination of the day, $m$ being the intermediate minimum.

TABLE II.—Hourly Means of the Temperature of the Air for each Month in 1844.

| Mak. M. T. | Jan. | Feb. | March. | April. | May. | June. | July. | Aug. | Sept. | Oct. | Nov. | Dec. |
|---|---|---|---|---|---|---|---|---|---|---|---|---|
| h. | ° | ° | ° | ° | ° | ° | ° | ° | ° | ° | ° | ° |
| 12 | 35·4 | 29·9 | 35·3 | 42·0 | 42·7 | 49·6 | 50·4 | 50·0 | 48·5 | 42·9 | 41·8 | 31·4 |
| 13 | 35·4 | 30·0 | 35·2 | 41·5 | 42·6 | 49·2 | 49·5 | 49·3 | 48·1 | 42·9 | 42·1 | 31·3 |
| 14 | 35·3 | 29·6 | 35·3 | 40·8 | 41·7 | 48·8 | 49·2 | 49·0 | 47·7 | 42·3 | 41·9 | 31·2 |
| 15 | 35·1 | 29·7 | 34·9 | 40·5 | 41·3 | 48·5 | 48·8 | 48·4 | 47·2 | 42·3 | 41·8 | 31·0 |
| 16 | 35·1 | 29·7 | 34·5 | 40·2 | 41·3 | 49·1 | 48·9 | 48·0 | 46·8 | 42·2 | 41·6 | 30·9 |
| 17 | 34·7 | 30·2 | 34·2 | 40·3 | 42·4 | 50·0 | 50·2 | 48·2 | 46·9 | 41·8 | 41·7 | 30·9 |
| 18 | 35·2 | 30·1 | 34·0 | 41·7 | 44·6 | 51·7 | 52·4 | 50·0 | 47·5 | 42·1 | 41·7 | 30·8 |
| 19 | 35·7 | 30·0 | 35·1 | 43·6 | 46·8 | 53·5 | 54·7 | 52·0 | 49·8 | 42·4 | 41·7 | 30·9 |
| 20 | 36·0 | 30·5 | 36·9 | 46·1 | 48·6 | 55·1 | 56·9 | 54·3 | 52·5 | 44·3 | 41·8 | 30·8 |
| 21 | 36·5 | 32·3 | 38·9 | 48·9 | 50·4 | 56·0 | 58·1 | 56·6 | 54·8 | 46·3 | 42·9 | 30·8 |
| 22 | 37·6 | 34·2 | 40·6 | 51·6 | 51·9 | 57·9 | 59·3 | 58·4 | 56·6 | 48·3 | 43·6 | 31·7 |
| 23 | 38·9 | 35·5 | 41·8 | 52·9 | 53·7 | 59·8 | 60·7 | 59·8 | 57·9 | 50·0 | 44·3 | 32·6 |
| 0 | 40·1 | 36·1 | 42·9 | 53·7 | 55·0 | 59·9 | 61·1 | 60·9 | 58·7 | 51·1 | 44·9 | 33·5 |
| 1 | 40·6 | 37·0 | 43·4 | 53·9 | 55·8 | 60·5 | 61·2 | 61·2 | 59·1 | 51·5 | 45·3 | 34·3 |
| 2 | 40·5 | 37·0 | 43·7 | 54·1 | 56·0 | 59·8 | 61·4 | 61·1 | 59·0 | 51·6 | 45·1 | 33·9 |
| 3 | 39·7 | 35·8 | 43·6 | 53·7 | 55·9 | 58·9 | 61·7 | 61·0 | 58·5 | 50·6 | 44·2 | 32·9 |
| 4 | 38·4 | 34·6 | 42·6 | 52·3 | 55·0 | 58·4 | 60·8 | 60·5 | 57·3 | 49·2 | 43·3 | 31·9 |
| 5 | 37·6 | 32·9 | 40·9 | 50·8 | 53·6 | 57·4 | 60·0 | 58·5 | 55·4 | 47·1 | 42·5 | 31·6 |
| 6 | 36·7 | 32·2 | 39·1 | 49·0 | 51·8 | 56·0 | 58·7 | 56·9 | 53·9 | 46·1 | 42·4 | 31·2 |
| 7 | 36·6 | 31·9 | 38·1 | 46·6 | 49·6 | 54·7 | 57·1 | 54·6 | 52·6 | 45·3 | 42·4 | 31·2 |
| 8 | 36·4 | 31·4 | 37·2 | 45·4 | 47·4 | 53·1 | 54·8 | 53·1 | 51·2 | 44·8 | 41·9 | 31·0 |
| 9 | 36·4 | 31·1 | 36·5 | 43·8 | 45·9 | 51·9 | 53·5 | 51·7 | 50·5 | 43·9 | 41·6 | 31·1 |
| 10 | 36·1 | 30·7 | 36·2 | 42·9 | 44·8 | 51·0 | 52·2 | 50·7 | 49·6 | 43·7 | 41·5 | 30·9 |
| 11 | 36·3 | 30·8 | 36·0 | 42·1 | 43·8 | 50·3 | 51·7 | 50·0 | 49·1 | 43·7 | 41·7 | 31·0 |

It should be remarked, that the changes of temperature between $11^h\ 10^m$ P.M., and $12^h\ 10^m$ A.M., are slightly inaccurate in Table II.; this is due to the variations of temperature between $11^h\ 10^m$ P.M. of the Saturdays, and $12^h\ 10^m$ A.M. of the Mondays, and to the difference between the temperature at $12^h\ 10^m$ A.M., the first hour of the month,—and $11^h\ 10^m$ P.M., the last hour. The changes of temperature between $11^h\ 10^m$ P.M., and $12^h\ 10^m$ A.M., as determined by the observations for each month, where the interval was only one hour, are as follow, namely, temperature at $12^h\ 10^m$ A.M., *minus* temperature at $11^h\ 10^m$ P.M.:—

| Jan. | Feb. | March. | April. | May. | June. | July. | Aug. | Sept. | Oct. | Nov. | Dec. | Year. |
|---|---|---|---|---|---|---|---|---|---|---|---|---|
| 0°·00 | −0°·15 | −0°·20 | −0°·24 | −0°·85 | −0°·39 | −0°·77 | −0°·33 | −0°·47 | −0°·36 | +0°·18 | +0°·05 | −0°·30 |

The changes actually exhibited in Table II. are—

| | | | | | | | | | | | | |
|---|---|---|---|---|---|---|---|---|---|---|---|---|
| −0°·9 | −0°·9 | −0°·7 | −0°·1 | −1°·1 | −0°·7 | −1°·3 | 0°·0 | −0°·6 | −0°·8 | +0°·1 | +0°·4 | −0°·55 |

*Diurnal Variation of Temperature.*—When the true changes of temperature at midnight are remembered, it will be seen that in the three months of November, December, and January, the temperature varies little more than 0°·5 for five or six hours before and after midnight; the minimum in these months, therefore, is not very distinctly marked. The following are the approximate epochs for each month of 1844:—

| | | Jan. | Feb. | March. | April. | May. | June. | July. | Aug. | Sept. | Oct. | Nov. | Dec. |
|---|---|---|---|---|---|---|---|---|---|---|---|---|---|
| Min. | A.M. | $5^h\ 10^m$ | $2^h$—$4^h$ | $6^h\ 10^m$ | $4^h\ 30^m$ | $3^h\ 40^m$ | $3^h\ 10^m$ | $3^h\ 30^m$ | $4^h\ 30^m$ | $4^h\ 30^m$ | $5^h\ 10^m$ | $10^h$—$4^h$ | $10^h$—$9^h$ |
| Max. | P.M. | $1^h\ 30^m$ | $1^h\ 40^m$ | $2^h\ 20^m$ | $2^h\ 10^m$ | $2^h\ 10^m$ | $1^h\ 10^m$ | $3^h\ 10^m$ | $1^h\ 30^m$ | $1^h\ 30^m$ | $2^h\ 0^m$ | $1^h\ 20^m$ | $1^h\ 20^m$ |

The following Table contains the means for the astronomical quarters (November, December, and January being winter), and for the year.

TABLE III.—Hourly Means of the Temperature of the Air for each Astronomical Quarter, and for the Year 1844.

| Mak. M. T. | Nov. Dec. Jan. | Feb. March April. | May June July. | Aug. Sept. Oct. | Year. | Mak. M. T. | Nov. Dec. Jan. | Feb. March April. | May June July. | Aug. Sept. Oct. | Year. |
|---|---|---|---|---|---|---|---|---|---|---|---|
| h. | ° | ° | ° | ° | ° | h. | ° | ° | ° | ° | ° |
| 12 | 36·20 | 35·73 | 47·57 | 47·13 | 41·66 | 0 | 39·50 | 44·23 | 58·67 | 56·90 | 49·82 |
| 13 | 36·27 | 35·57 | 47·10 | 46·77 | 41·42 | 1 | 40·07 | 44·77 | 59·17 | 57·27 | 50·32 |
| 14 | 36·13 | 35·23 | 46·57 | 46·33 | 41·07 | 2 | 39·83 | 44·93 | 59·07 | 57·23 | 50·27 |
| 15 | 35·97 | 35·03 | 46·20 | 45·97 | 40·79 | 3 | 38·93 | 44·37 | 58·83 | 56·70 | 49·71 |
| 16 | 35·87 | 34·80 | 46·43 | 45·67 | 40·69 | 4 | 37·87 | 43·17 | 58·07 | 55·67 | 48·69 |
| 17 | 35·77 | 34·90 | 47·53 | 45·63 | 40·96 | 5 | 37·23 | 41·53 | 57·00 | 53·67 | 47·36 |
| 18 | 35·90 | 35·27 | 49·57 | 46·53 | 41·82 | 6 | 36·77 | 40·10 | 55·50 | 52·30 | 46·17 |
| 19 | 36·10 | 36·23 | 51·67 | 48·07 | 43·02 | 7 | 36·73 | 38·87 | 53·80 | 50·83 | 45·06 |
| 20 | 36·20 | 37·83 | 53·53 | 50·37 | 44·48 | 8 | 36·43 | 38·00 | 51·77 | 49·70 | 43·97 |
| 21 | 36·73 | 40·03 | 54·83 | 52·57 | 46·04 | 9 | 36·37 | 37·13 | 50·43 | 48·70 | 43·16 |
| 22 | 37·63 | 42·13 | 56·37 | 54·43 | 47·64 | 10 | 36·17 | 36·60 | 49·33 | 48·00 | 42·52 |
| 23 | 38·60 | 43·40 | 58·07 | 55·90 | 48·99 | 11 | 36·33 | 36·30 | 48·60 | 47·60 | 42·21 |

These means give the following epochs of minimum and maximum :—

| | Winter. | Spring. | Summer. | Autumn. | Year 1844. |
|---|---|---|---|---|---|
| Min. | $5^h\ 10^m$ A.M. | $4^h\ 30^m$ A.M. | $3^h\ 20^m$ A.M. | $4^h\ 50^m$ A.M. | $4^h\ 0^m$ A.M. |
| Max. | $1^h\ 20^m$ P.M. | $2^h\ 0^m$ P.M. | $1^h\ 25^m$ P.M. | $1^h\ 40^m$ P.M. | $1^h\ 30^m$ P.M. |

The minimum temperature occurs earliest in summer, and latest in winter; it occurs about 3 hours before sunrise in winter, 2 hours before it in spring, ¼ hour in summer, and about 1 hour before sunrise in autumn. The maximum temperature occurs nearest noon in winter, and nearer noon in summer than at the equinoxes. This result was obtained from the two hourly observations for 1843, p. 265.

In order to examine the variations of temperature about midnight in the winter group, we may connect the mean at $12^h$ with that at $11^h$, by means of the corrections given above; from these, the mean at $12^h$ in winter is greater than the mean at $11^h$, by 0°·08; from this, and the above means for the winter group, we find the *variations* of temperature from $9^h\ 10^m$ P.M., till $3^h\ 10^m$, to be as follow :—

| $9^h$ | $10^h$ | $11^h$ | $12^h$ | $1^h$ | $2^h$ | $3^h$ |
|---|---|---|---|---|---|---|
| 0°·20 | 0°·00 | 0°·16 | 0°·24 | 0°·31 | 0°·17 | 0°·01 |

From these, there appears to have been a secondary maximum of temperature in winter at $1^h\ 10^m$ A.M., the secondary minimum occurring at $10^h\ 10^m$ P.M. This result is exhibited in the means for each of the months November and December, and also in those for January, the true change from $11^h$ to $12^h$ being considered.

The maximum temperature for the year 1844 occurs at the same hour as for 1843,—namely, $1^h\ 30^m$ P.M. The mean temperature for each month occurs at the following times :—

| | Jan. | Feb. | March. | April. | May. | June. | July. | Aug. | Sept. | Oct. | Nov. | Dec. |
|---|---|---|---|---|---|---|---|---|---|---|---|---|
| A.M., | $9^h\ 34^m$ | $9^h\ 7^m$ | $8^h\ 49^m$ | $8^h\ 22^m$ | $8^h\ 5^m$ | $7^h\ 34^m$ | $7^h\ 33^m$ | $8^h\ 11^m$ | $8^h\ 10^m$ | $8^h\ 51^m$ | $8^h\ 56^m$ | $10^h\ 5^m$ |
| P.M., | 5 55 | 6 8 | 7 4 | 7 8 | 7 42 | 7 28 | 7 50 | 7 18 | 7 16 | 6 41 | 5 0 | 5 6 |
| Intervals, | 8 21 | 9 1 | 10 15 | 10 46 | 11 37 | 11 54 | 12 17 | 11 7 | 11 6 | 9 50 | 8 4 | 7 1 |

The intervals are greatest in the three months constituting the astronomical summer, and least in the three months constituting the astronomical winter. December has the least, and July has the greatest, critical interval. The following are the epochs of *mean temperature* for the astronomical quarters :—

| | Winter. | Spring. | Summer. | Autumn. | Year 1844. |
|---|---|---|---|---|---|
| A.M., | $9^h\ 33^m$ | $8^h\ 38^m$ | $7^h\ 44^m$ | $8^h\ 23^m$ | $8^h\ 26{\cdot}5^m$ |
| P.M., | 5 31 | 7 3 | 7 42 | 7 10 | 7 18·3 |
| Intervals, | 7 58 | 10 25 | 11 58 | 10 47 | 10 51·8 |

TABLE IV.—Errors of the Approximate Mean Temperatures, deduced from one or two Daily Observations, for each Month, and the Year 1844.

| Months and Year. | True Mean. | Approximate Means (+) greater, or (−) less than true Means. | | | | | | | | |
|---|---|---|---|---|---|---|---|---|---|---|
| | | Max. and Min. | 17h 10m and 4h 10m. | 21h 40m and 10h 10m. | 21h 40m and 9h 40m. | 22h 10m and 11h 10m. | 22h 10m and 10h 10m. | 17h 10m and 23h 10m. | 21h 10m and 9h 10m. | 7h 10m. |
| January | 36°·92 | −0°·29 | −0°·37 | −0°·35 | −0°·27 | +0°·02 | −0°·07 | −0°·12 | −0°·47 | −0°·33 |
| February | 32·22 | +0·25 | +0·18 | −0·25 | −0·13 | +0·28 | +0·23 | +0·63 | −0·52 | −0·32 |
| March | 38·23 | +0·37 | +0·17 | −0·26 | −0·18 | +0·10 | +0·17 | −0·23 | −0·53 | −0·10 |
| April | 46·60 | +0·48 | −0·30 | −0·03 | +0·20 | +0·25 | +0·65 | 0·00 | −0·25 | 0·00 |
| May | 48·46 | +0·23 | +0·24 | −0·49 | −0·21 | −0·59 | −0·11 | −0·41 | −0·31 | +1·16 |
| June | 54·20 | +1·06 | 0·00 | −0·23 | 0·00 | −0·11 | +0·25 | +0·70 | −0·25 | +0·49 |
| July | 55·56 | +0·51 | −0·05 | −0·11 | +0·21 | −0·05 | +0·19 | −0·11 | +0·24 | +1·55 |
| August | 54·32 | +1·55 | +0·03 | −0·22 | +0·03 | −0·14 | +0·23 | −0·32 | −0·17 | +0·26 |
| September | 52·46 | +0·56 | −0·36 | +0·19 | +0·41 | +0·36 | +0·64 | −0·06 | +0·19 | +0·13 |
| October | 45·71 | +0·62 | −0·21 | −0·21 | −0·16 | +0·32 | +0·29 | +0·19 | −0·61 | −0·38 |
| November | 42·66 | −0·78 | −0·16 | −0·29 | −0·26 | 0·00 | −0·11 | +0·34 | −0·35 | −0·25 |
| December | 31·63 | +0·10 | −0·23 | −0·56 | −0·51 | −0·27 | −0·33 | +0·12 | −0·68 | −0·42 |
| Year | 44·91 | +0·39 | −0·09 | −0·23 | −0·07 | +0·01 | +0·17 | +0·06 | −0·31 | +0·15 |
| The 12 Months. | | | | | | | | | | |
| Mean of Errors | | 0·57 | 0·18 | 0·26 | 0·21 | 0·21 | 0·27 | 0·27 | 0·38 | 0·45 |
| Range of Errors | | 2·33 | 0·61 | 0·75 | 0·92 | 0·95 | 0·98 | 1·11 | 0·92 | 1·99 |

*Approximations to the Monthly Mean Temperatures.*—The values of the approximations to the monthly mean temperature, from observations at two hours each day, may be considered inversely proportional to the *mean* of the errors; they may also be considered inversely proportional to the *range* of the errors, whence the values will be inversely proportional to their product. By means of this measure, we find the values of the approximations to be in the following order, commencing with the highest:—

1st. 5h 10m A.M., and 4h 10m P.M. 2d. 9h 40m A.M., and 10h 10m P.M. 3d. 9h 40m A.M., and 9h 40m P.M.
4th. 10h 10m A.M., and 11h 10m P.M. 5th. 10h 10m A.M., and 10h 10m P.M. 6th. 5h 10m A.M., and 11h 10m A.M.
7th. 9h 10m A.M., and 9h 10m P.M. 8th. 7h 10m P.M. 9th. Max. and Min.

The best approximation to the mean for the year is given by the observations at 10h 10m A.M. and 11h 10m P.M., which differs only 0°·01 from it. If the approximations to the mean for the year should be nearly constant from year to year, then the best approximations to the monthly means should be determined by employing the mean error *after* correcting by the yearly difference. Thus, if the monthly means for 9h 40m A.M. and 10h 10m P.M., are corrected by +0·23—the correction for the yearly mean from the observations at the same hours—the average error of the monthly means is only 0°·13.

The following are the errors of the yearly means, as deduced from each couple of homonymous hours:—

| A.M. and P.M. | 12h 10m | 1h 10m | 2h 10m | 3h 10m | 4h 10m | 5h 10m | 6h 10m | 7h 10m | 8h 10m | 9h 10m | 10h 10m | 11h 10m |
|---|---|---|---|---|---|---|---|---|---|---|---|---|
| | +0°·83 | +0°·96 | +0°·76 | +0°·34 | −0°·22 | −0°·75 | −0°·92 | −0°·87 | −0°·69 | −0°·31 | +0°·17 | +0°·69 |

The following are the errors of the yearly means, as deduced from two observations made at intervals of 11h, nearly the critical interval for the year:—

| 11h 10m P.M. 10 10 A.M. | 12h 10m A.M. 11 10 A.M. | 1h 10m A.M. 12 10 P.M. | 2h 10m 1 10 | 3h 10m 2 10 | 4h 10m 3 10 | 5h 10m 4 10 | 6h 10m 5 10 | 7h 10m 6 10 | 8h 10m 7 10 | 9h 10m 8 10 | 10h 10m 9 10 |
|---|---|---|---|---|---|---|---|---|---|---|---|
| +0°·01 | +0°·41 | +0°·71 | +0°·78 | +0°·62 | +0°·29 | −0°·09 | −0°·32 | −0°·32 | −0°·14 | +0°·09 | +0°·49 |

The average of the errors for the 12 homonymous hours is 0°·63, and the range of errors is 1°·88.
..... 12 couples at the critical interval is 0°·36, and the range of errors is 1°·10.

Observations at each of the following three couples of hours which are at the critical interval, give the mean for the year to 0°·01,—namely, 11h 20m P.M. and 10h 10m A.M., 5h 20m A.M. and 4h 10m P.M., and 8h 20m A.M. and 7h 10m P.M.

TABLE V.—Diurnal Ranges of Temperature, as deduced from the Hourly Observations of the Dry Bulb Thermometer, on each Civil Day of 1844.

| Civil Day. | Jan. | Feb. | March. | April. | May. | June. | July. | Aug. | Sept. | Oct. | Nov. | Dec. |
|---|---|---|---|---|---|---|---|---|---|---|---|---|
| | ° | ° | ° | ° | ° | ° | ° | ° | ° | ° | ° | ° |
| 1 | 8·9 | 11·6 | 8·8 | 25·9 | 37·8 | 13·1 | 18·0 | 10·1 | (26·0) | 7·0 | 3·8 | (6·0) |
| 2 | 16·5 | 6·9 | 8·7 | 10·8 | 28·9 | (10·0) | 15·7 | 17·4 | 31·8 | 8·9 | 3·1 | 3·3 |
| 3 | 12·0 | 13·4 | (7·0) | 9·8 | 34·4 | 23·0 | 14·3 | 21·3 | 22·6 | 12·4 | (3·4) | 5·5 |
| 4 | 6·2 | (14·0) | 8·8 | 11·0 | 6·0 | 25·7 | 13·5 | (24·0) | 11·5 | 10·7 | 3·6 | 9·8 |
| 5 | 11·7 | 15·8 | 14·1 | 23·0 | (15·0) | 12·0 | 12·7 | 9·8 | 11·5 | 15·7 | 2·8 | 11·1 |
| 6 | 6·8 | 20·1 | 9·3 | 23·7 | 24·6 | 14·9 | 10·7 | 13·7 | 5·8 | (18·0) | 3·1 | 11·8 |
| 7 | (10·0) | 15·0 | 12·1 | (20·0) | 24·6 | 10·6 | (20·0) | 7·9 | 13·7 | 17·4 | 11·8 | 16·9 |
| 8 | 7·4 | 10·2 | 10·2 | 15·7 | 27·7 | 13·8 | 24·4 | 10·4 | (5·0) | 22·1 | 12·0 | (10·0) |
| 9 | 4·6 | 4·9 | 10·0 | 13·1 | 35·1 | (21·0) | 11·6 | 9·7 | 8·8 | 6·5 | 8·2 | 5·2 |
| 10 | 10·6 | 8·9 | (6·0) | 21·0 | 8·0 | 17·9 | 18·0 | 19·7 | 14·6 | 16·2 | (6·0) | 4·6 |
| 11 | 7·9 | (14·0) | 13·5 | 15·6 | 5·9 | 23·0 | 11·1 | (22·0) | 21·3 | 12·5 | 8·6 | 3·1 |
| 12 | 9·8 | 16·7 | 12·1 | 12·1 | (20·0) | 15·4 | 14·1 | 14·7 | 16·6 | 18·7 | 6·6 | 4·2 |
| 13 | 11·0 | 9·7 | 12·8 | 14·8 | 27·3 | 15·1 | 13·4 | 18·5 | 20·4 | (8·0) | 6·1 | 8·3 |
| 14 | (14·0) | 6·7 | 17·3 | (18·0) | 12·7 | 10·6 | (7·0) | 17·8 | 5·5 | 12·2 | 11·0 | 2·1 |
| 15 | 14·3 | 13·1 | 3·5 | 14·2 | 19·0 | 12·3 | 19·6 | 8·4 | (9·0) | 8·5 | 16·6 | (3·0) |
| 16 | 6·3 | 10·3 | 3·5 | 21·6 | 26·4 | (22·0) | 21·9 | 16·1 | 14·3 | 11·0 | 5·4 | 4·7 |
| 17 | 12·6 | 6·5 | (17·0) | 15·0 | 14·3 | 23·3 | 24·5 | 7·4 | 4·9 | 5·2 | (5·0) | 4·7 |
| 18 | 15·7 | (7·0) | 26·3 | 11·7 | 16·3 | 6·9 | 15·3 | (16·0) | 11·7 | 16·7 | 3·2 | 3·6 |
| 19 | 14·4 | 13·0 | 14·3 | 15·6 | (15·0) | 10·0 | 15·2 | 14·1 | 9·6 | 19·3 | 6·2 | 13·5 |
| 20 | 7·1 | 7·5 | 14·3 | 17·0 | 9·7 | 21·8 | 18·0 | 11·8 | 16·6 | (17·0) | 10·4 | 7·9 |
| 21 | (12·0) | 15·6 | 16·8 | (14·0) | 13·6 | 13·4 | (16·0) | 12·5 | 20·4 | 22·1 | 17·8 | 11·1 |
| 22 | 15·5 | 20·8 | 14·6 | 13·0 | 18·7 | 15·8 | 20·1 | 6·6 | (22·0) | 19·0 | 11·2 | (4·0) |
| 23 | 14·4 | 13·4 | 11·2 | 14·9 | 21·7 | (25·0) | 31·8 | 15·7 | 17·9 | 26·3 | 9·2 | 3·4 |
| 24 | 15·2 | 5·9 | (9·0) | 11·7 | 13·5 | 14·8 | 7·1 | 19·1 | 21·0 | 21·5 | (14·0) | 3·6 |
| 25 | 11·5 | (10·0) | 10·2 | 21·3 | 14·7 | 8·0 | 16·5 | (21·0) | 24·4 | 10·2 | 11·9 | 1·6 |
| 26 | 10·6 | 9·9 | 18·2 | 17·5 | (14·0) | 7·4 | 13·1 | 15·8 | 8·8 | 5·9 | 17·5 | 3·7 |
| 27 | 5·0 | 25·2 | 17·9 | 17·3 | 12·0 | 11·3 | 17·6 | 22·9 | 12·6 | (13·0) | 2·9 | 9·3 |
| 28 | (7·0) | 10·3 | 21·1 | (30·0) | 13·3 | 16·9 | (19·0) | 23·8 | 15·5 | 16·1 | 3·2 | 10·0 |
| 29 | 18·4 | 7·2 | 19·0 | 33·3 | 8·7 | 14·7 | 14·1 | 32·2 | (18·0) | 12·0 | 10·1 | (10·0) |
| 30 | 13·0 | | 32·0 | 35·6 | 9·4 | (26·0) | 12·4 | 28·6 | 22·9 | 2·7 | 9·8 | 8·5 |
| 31 | 7·2 | | (15·0) | | 9·6 | | 9·2 | 21·7 | | 3·4 | | 12·2 |
| Mean | 10·9 | 11·8 | 13·4 | 17·9 | 18·0 | 15·9 | 16·0 | 16·5 | 15·5 | 13·4 | 8·2 | 7·0 |

The quantities within parentheses are approximate ranges for the Sundays, deduced from the last observation of Saturday, the first of Monday, and the maximum of the register thermometer, or from the latter and the minimum of the register thermometer.

*Diurnal Range of Temperature.*—From the means at the foot of Table V., it appears that the mean of the diurnal ranges of temperature is less for the months about the summer solstice than for the months before and after them. The greatest mean ranges are those for April, May, and August; the least mean range is that for December. The mean of the ranges for the astronomical quarters, and for the year 1844, are as follow:—

Winter, 8°·68 Spring, 14°·40 Summer, 16°·63 Autumn, 15°·13 Year, 13°·71

The mean ranges, as deduced from the minima and *succeeding* maxima of the register thermometers, are for each month as follow:—

| Jan. | Feb. | March. | April. | May. | June. | July. | Aug. | Sept. | Oct. | Nov. | Dec. |
|---|---|---|---|---|---|---|---|---|---|---|---|
| 10°·9 | 11°·7 | 13°·1 | 18°·4 | 19°·4 | 18°·2 | 18°·7 | 19°·5 | 15°·9 | 13°·4 | 8°·4 | 6°·8 |

These means are rather larger in the summer months than those deduced from the hourly observations, but they follow the same law; the means for the astronomical quarters are—

Winter, 8°·74 Spring, 14°·43 Summer, 18°·75 Autumn, 16°·24 Year, 14°·54

From Table II. we find the diurnal range of the mean hourly temperatures for each month to be—

| Jan. | Feb. | March. | April. | May. | June. | July. | Aug. | Sept. | Oct. | Nov. | Dec. |
|---|---|---|---|---|---|---|---|---|---|---|---|
| 5°·9 | 7°·4 | 9°·7 | 13°·9 | 14°·7 | 12°·0 | 12°·9 | 13·2 | 12°·3 | 9°·8 | 3°·8 | 3°·5 |

These ranges also follow the same law of *variation* as the means of the ranges; the ranges of the hourly mean temperature for each of the astronomical quarters, and for the year 1844, are—

Winter, 4°·30 Spring, 10°·13 Summer, 12°·97 Autumn, 11°·64 Year, 9°·63

TABLE VI.—Extremes of Temperature for each Month from the Register Thermometers; Extremes of Daily Mean Temperature, and of Diurnal Ranges, obtained from the Hourly Observations for 1844.

| Month. | Extreme Temperatures. | | | | | | Extremes of Daily Mean Temperature. | | | | | | Extreme Diurnal Ranges. | | | |
|---|---|---|---|---|---|---|---|---|---|---|---|---|---|---|---|---|
| | Highest. | | Lowest. | | Range. | Mean. | Highest. | | Lowest. | | Range. | Mean. | Greatest. | | Least. | |
| | d. | ° | d. | ° | ° | ° | d. | ° | d. | ° | ° | ° | d. | ° | d. | ° |
| Jan. | 29 | 51·7 | 3 | 13·2 | 38·5 | 32·4 | 27 | 47·5 | 2 | 25·8 | 21·7 | 36·6 | 2 | 16·5 | 9 | 4·6 |
| Feb. | 15 | 48·2 | 22 | 11·5 | 36·7 | 29·8 | 15 | 42·8 | 6<br>22 | 23·1<br>23·3 | 19·7 | 32·9 | 27 | 25·2 | 9 | 4·9 |
| March | 30 | 61·2 | 18 | 18·2 | 43·0 | 39·7 | 27 | 49·1 | 5 | 30·8 | 18·3 | 39·9 | 30 | 32·0 | 15<br>16 | 3·5 |
| April | 29 | 66·9 | 6 | 26·4 | 40·5 | 46·6 | 20 | 52·8 | 5 | 38·9 | 13·9 | 45·8 | 30 | 35·6 | 3 | 9·8 |
| May | 13 | 71·3 | 18 | 29·6 | 41·7 | 50·4 | 13 | 55·9 | 18 | 39·9 | 16·0 | 47·9 | 1 | 37·8 | 11 | 5·9 |
| June | 23 | 75·4 | 17 | 36·2 | 39·2 | 55·8 | 6 | 60·1 | 1 | 48·2 | 11·9 | 54·1 | 4 | 25·7 | 18 | 6·9 |
| July | 23 | 81·8 | 17 | 38·3 | 43·5 | 60·0 | 23<br>25 | 63·8 | 4 | 49·9 | 13·9 | 56·8 | 23 | 31·8 | 24 | 7·1 |
| Aug. | 30 | 75·5 | 27 | 36·2 | 39·3 | 55·8 | 31 | 60·3 | 27 | 49·1 | 11·2 | 54·7 | 29 | 32·2 | 22 | 6·6 |
| Sept. | 2 | 76·3 | 22 | 29·7 | 46·6 | 53·0 | 7 | 60·7 | 21 | 42·9 | 17·8 | 51·8 | 2 | 31·8 | 17 | 4·9 |
| Oct. | 3 | 62·1 | 23 | 23·9 | 38·2 | 43·0 | 3 | 54·1 | 24 | 35·5 | 18·6 | 44·8 | 23 | 26·3 | 30 | 2·7 |
| Nov. | 17 | 54·2 | 25 | 23·6 | 30·6 | 38·9 | 16 | 50·4 | 25 | 30·6 | 19·8 | 40·5 | 21 | 17·8 | 5 | 2·8 |
| Dec. | 29 | 43·0 | 7 | 15·7 | 27·3 | 29·3 | 18 | 37·7 | 6 | 22·3 | 15·4 | 30·0 | 7 | 16·9 | 25 | 1·6 |

The means of the highest and lowest temperatures in each month are less than the monthly mean temperatures in the winter months, and higher in the summer months. The maximum temperature of the month is therefore more above the mean temperature in the summer months than the minimum for the month is below it; the reverse is the case for winter; the minimum then is farther below the mean temperature for the month than the maximum is above it.

*Extreme Values and Ranges of Temperature for* 1844.

The highest temperature of 1844 occurred ..... July 23. =81°·8
The lowest ..... Feb. 22. =11°·5 } Range=70°·3. Mean=46°·6

The highest daily mean temperature occurred July {23. 25.} =63°·8
The lowest ..... Dec. 6. =22°·3 } Range=41°·1. Mean=43°·0

The highest weekly mean temperature occurred July 22–27. =62°·7
The lowest ..... Dec. 5–11. =27°·7 } Range=35°·0. Mean=45°·2

The highest monthly mean temperature occurred July =55°·6
The lowest ..... Dec. =32°·0 } Range=23°·6. Mean=43°·8

The highest quarterly mean temperature is that for June, July, Aug. =54°·59
The lowest ..... Dec., Jan., Feb. =33°·99 } Range=20°·60. Mean=44°·29.

The greatest range of temperature in a civil day occurred ..... May 1. =37°·8.
..... an astronomical day occurred..... April 29—30. =39°·2.
The least range of temperature in a civil day occurred..... December 25. = 1°·6.
..... an astronomical day occurred..... December 26–27. = 1°·4.
The greatest range of temperature, within 30 days, occurred ..... Sept. 2—Sept. 22. Range, =46°·6.
..... daily mean temperature, within 30 days, occurred Nov. 16—Dec. 6. =27°·9.

TABLE VII.—Daily, Weekly, and Monthly Means of the Temperature of Evaporation, as deduced from the Readings of the Wet Bulb Thermometer, in 1844.

| Civil Day. | Jan. | Feb. | March. | April. | May. | June. | July. | Aug. | Sept. | Oct. | Nov. | Dec. |
|---|---|---|---|---|---|---|---|---|---|---|---|---|
| | ° | ° | ° | ° | ° | ° | ° | ° | ° | ° | ° | ° |
| 1 | 28·8 | 27·4 | 36·2 | 42·2 | 45·8 | 46·1 | 49·4 | 52·3 | [53·9] | 49·5 | 41·8 | [37·4] |
| 2 | 25·0 | 30·6 | 34·5 | 44·6 | 49·3 | [48·1] | 49·7 | 51·3 | 54·5 | 49·0 | 39·9 | 36·4 |
| 3 | 32·3 | 29·2 | [32·7] | 42·5 | 46·3 | 47·0 | 50·5 | 48·9 | 52·7 | 49·9 | [41·8] | 35·7 |
| 4 | 34·5 | [27·6] | 32·5 | 38·9 | 44·6 | 50·2 | 47·6 | [52·0] | 55·8 | 45·8 | 40·1 | 31·1 |
| 5 | 45·0 | 25·4 | 28·4 | 37·7 | [47·0] | 54·4 | 50·2 | 54·2 | 56·3 | 43·5 | 41·5 | 25·7 |
| 6 | 42·0 | 22·7 | 29·9 | 37·5 | 50·4 | 56·8 | 50·5 | 53·0 | 57·4 | [43·9] | 42·3 | 22·0 |
| 7 | [38·0] | 30·3 | 30·4 | [42·2] | 46·8 | 55·6 | [50·7] | 52·3 | 58·7 | 38·2 | 40·5 | 23·2 |
| 8 | 36·2 | 31·5 | 33·7 | 46·1 | 44·6 | 54·5 | 50·5 | 51·9 | [53·7] | 40·1 | 43·2 | [27·3] |
| 9 | 32·7 | 33·9 | 42·2 | 50·1 | 46·0 | [53·3] | 52·2 | 49·8 | 51·1 | 46·1 | 43·3 | 30·4 |
| 10 | 37·5 | 30·2 | [34·6] | 43·1 | 45·6 | 50·0 | 53·1 | 48·3 | 48·7 | 49·5 | [40·7] | 32·1 |
| 11 | 39·6 | [33·5] | 38·0 | 40·5 | 48·1 | 50·0 | 51·7 | [51·3] | 50·0 | 47·8 | 37·2 | 30·2 |
| 12 | 40·7 | 30·4 | 31·9 | 41·7 | [47·0] | 52·8 | 49·8 | 52·8 | 47·5 | 48·3 | 37·9 | 29·0 |
| 13 | 33·4 | 34·3 | 31·3 | 44·4 | 50·7 | 54·8 | 50·8 | 52·4 | 47·7 | [47·5] | 42·0 | 28·2 |
| 14 | [34·6] | 40·8 | 33·1 | [43·1] | 47·4 | 50·4 | [49·7] | 52·5 | 51·5 | 47·4 | 39·7 | 33·3 |
| 15 | 27·5 | 40·5 | 32·6 | 46·9 | 44·1 | 48·7 | 47·6 | 52·9 | [49·1] | 46·2 | 47·0 | [33·3] |
| 16 | 30·8 | 36·9 | 30·9 | 40·4 | 44·7 | [50·1] | 48·8 | 51·8 | 54·1 | 45·6 | 48·2 | 34·8 |
| 17 | 35·5 | 38·9 | [33·3] | 44·9 | 38·0 | 48·5 | 49·6 | 50·2 | 49·4 | 44·4 | [46·0] | 37·2 |
| 18 | 39·2 | [33·5] | 30·3 | 42·3 | 36·1 | 50·4 | 51·0 | [51·2] | 44·2 | 40·3 | 47·7 | 37·1 |
| 19 | 36·5 | 33·7 | 37·8 | 47·6 | [41·3] | 48·0 | 49·2 | 51·5 | 46·4 | 36·6 | 48·5 | 31·8 |
| 20 | 31·4 | 26·7 | 34·9 | 50·1 | 41·0 | 48·9 | 49·1 | 51·3 | 44·9 | [38·4] | 45·1 | 23·7 |
| 21 | [35·2] | 24·1 | 33·1 | [44·8] | 44·4 | 54·9 | [54·2] | 49·3 | 41·0 | 36·7 | 37·3 | 28·1 |
| 22 | 35·7 | 22·0 | 40·5 | 43·9 | 43·7 | 54·0 | 58·4 | 50·6 | [44·3] | 38·1 | 31·3 | [29·7] |
| 23 | 35·1 | 27·5 | 38·7 | 44·2 | 43·6 | [51·7] | 58·2 | 51·9 | 42·3 | 34·6 | 37·8 | 32·6 |
| 24 | 33·6 | 30·3 | [40·2] | 40·6 | 44·7 | 57·4 | 59·5 | 50·5 | 45·9 | 34·6 | [36·5] | 31·3 |
| 25 | 40·8 | [28·1] | 40·6 | 45·3 | 43·6 | 48·6 | 58·2 | [49·1] | 45·2 | 43·2 | 30·3 | 30·5 |
| 26 | 38·5 | 28·0 | 42·2 | 42·9 | [43·5] | 46·4 | 57·4 | 48·0 | 53·1 | 43·9 | 36·5 | 31·2 |
| 27 | 44·9 | 27·4 | 46·3 | 40·4 | 43·0 | 46·9 | 59·5 | 45·1 | 55·0 | [41·6] | 45·6 | 31·1 |
| 28 | [38·2] | 33·7 | 39·4 | [43·0] | 42·8 | 51·1 | [55·1] | 48·6 | 51·8 | 39·7 | 44·0 | 29·4 |
| 29 | 39·9 | 34·7 | 45·2 | 43·6 | 43·2 | 50·1 | 51·7 | 50·9 | [50·5] | 42·9 | 40·6 | [31·7] |
| 30 | 35·9 | | 41·6 | 40·0 | 45·7 | [49·6] | 51·0 | 53·2 | 44·9 | 45·2 | 36·4 | 34·7 |
| 31 | 29·0 | | [42·0] | | 45·5 | | 53·0 | 56·4 | | 45·0 | | 34·0 |
| Mean | 35·63 | 30·84 | 36·00 | 43·17 | 44·80 | 51·06 | 52·16 | 51·18 | 50·00 | 43·41 | 40·99 | 30·95 |

*Annual Variation of the Temperature of Evaporation.*—This follows the same law as the temperature of the air. The maximum occurs in July and the minimum in December and February. The means for the thermal seasons are as follow :—

| | | | | | |
|---|---|---|---|---|---|
| Winter, | Dec., Jan., Feb., | 32°·54 | Summer, | June, July, Aug., | 51°·48 |
| Spring, | March, April, May, | 41°·37 | Autumn, | Sept., Oct., Nov., | 44°·72 |

The mean temperature of evaporation for 1844 = 42°·55

*Diurnal Variation of the Temperature of Evaporation.*—This, on the whole, also follows the same law as the temperature of the air. The hours of maximum and minimum for the astronomical seasons and for the year, are as follow :—

| | Winter. | Spring. | Summer. | Autumn. | Year 1844. |
|---|---|---|---|---|---|
| Min. | $5^h\ 10^m$ A.M. | $4^h\ 30^m$ A.M. | $3^h\ 30^m$ A.M. | $5^h\ 0^m$ A.M. | $4^h\ 0^m$ A.M. |
| Max. | $1^h\ 15^m$ P.M. | $1^h\ 55^m$ P.M. | $1^h\ 40^m$ P.M. | $1^h\ 40^m$ P.M. | $1^h\ 30^m$ P.M. |

The epochs for the year for the temperature of the air and of evaporation are the same, and they are nearly the same for the quarters. The secondary maximum in winter at midnight is also shewn in the means for the temperature of evaporation.

The mean temperature of evaporation for the year occurs at $8^h\ 19^m$ A.M.
..... $7^h\ 32^m$ P.M.

The interval between the two periods of mean temperature is $11^h\ 13^m$

TABLE VIII.—Hourly Means of the Temperature of Evaporation for each Month in 1844.

| Mak. M. T. | Jan. | Feb. | March. | April. | May. | June. | July. | Aug. | Sept. | Oct. | Nov. | Dec. |
|---|---|---|---|---|---|---|---|---|---|---|---|---|
| h. | ° | ° | ° | ° | ° | ° | ° | ° | ° | ° | ° | ° |
| 12 | 34·2 | 28·8 | 33·9 | 40·4 | 41·4 | 48·2 | 49·1 | 48·6 | 47·5 | 41·5 | 40·4 | 30·8 |
| 13 | 34·2 | 28·9 | 33·8 | 40·2 | 41·1 | 47·8 | 48·5 | 48·1 | 47·1 | 41·5 | 40·5 | 30·7 |
| 14 | 34·1 | 28·6 | 34·0 | 39·4 | 40·4 | 47·6 | 48·2 | 47·8 | 46·7 | 41·0 | 40·5 | 30·6 |
| 15 | 34·1 | 28·8 | 33·6 | 39·0 | 40·0 | 47·4 | 47·9 | 47·3 | 46·3 | 41·0 | 40·4 | 30·4 |
| 16 | 34·1 | 28·8 | 33·2 | 38·9 | 40·0 | 47·6 | 47·9 | 47·0 | 45·9 | 40·9 | 40·3 | 30·4 |
| 17 | 33·9 | 29·3 | 33·0 | 39·0 | 40·8 | 48·3 | 48·9 | 47·1 | 45·9 | 40·4 | 40·3 | 30·4 |
| 18 | 34·3 | 29·1 | 32·8 | 40·0 | 42·4 | 49·6 | 50·5 | 48·4 | 46·4 | 40·7 | 40·4 | 30·3 |
| 19 | 34·7 | 29·0 | 34·0 | 41·6 | 43·9 | 50·6 | 52·0 | 50·0 | 48·5 | 40·9 | 40·4 | 30·3 |
| 20 | 35·1 | 29·6 | 35·4 | 43·3 | 45·2 | 51·5 | 53·0 | 51·6 | 50·4 | 42·5 | 40·5 | 30·2 |
| 21 | 35·6 | 31·1 | 36·7 | 45·0 | 46·1 | 52·0 | 53·6 | 52·8 | 51·9 | 44·0 | 41·3 | 30·2 |
| 22 | 36·3 | 32·5 | 37·9 | 46·7 | 47·1 | 53·2 | 54·2 | 53·7 | 53·0 | 45·4 | 41·8 | 31·1 |
| 23 | 37·4 | 33·4 | 38·6 | 47·5 | 48·0 | 54·4 | 54·9 | 54·3 | 53·6 | 46·5 | 42·3 | 31·8 |
| 0 | 38·2 | 33·8 | 39·4 | 47·8 | 48·6 | 54·8 | 55·3 | 54·6 | 53·6 | 47·0 | 42·5 | 32·6 |
| 1 | 38·7 | 34·3 | 39·5 | 47·8 | 48·9 | 55·0 | 55·3 | 54·8 | 53·7 | 47·3 | 42·8 | 33·2 |
| 2 | 38·5 | 34·4 | 39·7 | 47·8 | 49·3 | 54·4 | 55·6 | 54·9 | 53·8 | 47·2 | 42·5 | 32·9 |
| 3 | 37·9 | 33·6 | 39·6 | 47·3 | 49·3 | 54·0 | 55·6 | 55·1 | 53·7 | 46·6 | 42·0 | 32·1 |
| 4 | 36·8 | 32·7 | 38·9 | 46·6 | 48·7 | 53·6 | 55·0 | 54·7 | 53·0 | 45·8 | 41·3 | 31·2 |
| 5 | 36·2 | 31·6 | 37·9 | 45·7 | 48·0 | 53·2 | 54·8 | 53·7 | 52·2 | 44·5 | 40·7 | 30·8 |
| 6 | 35·4 | 30·9 | 36·7 | 44·4 | 47·0 | 52·5 | 53·9 | 53·2 | 51·3 | 43·8 | 40·7 | 30·5 |
| 7 | 35·3 | 30·7 | 36·1 | 43·0 | 45·8 | 51·6 | 53·3 | 51·9 | 50·6 | 43·4 | 40·7 | 30·5 |
| 8 | 35·1 | 30·4 | 35·5 | 42·2 | 44·7 | 50·5 | 52·2 | 51·3 | 49·7 | 42·9 | 40·4 | 30·3 |
| 9 | 35·2 | 29·9 | 34·9 | 41·3 | 43·7 | 49·8 | 51·3 | 50·0 | 49·2 | 42·3 | 40·2 | 30·4 |
| 10 | 34·9 | 29·7 | 34·8 | 40·7 | 42·9 | 49·2 | 50·5 | 49·3 | 48·4 | 42·1 | 40·1 | 30·3 |
| 11 | 35·1 | 29·8 | 34·6 | 40·4 | 42·2 | 48·7 | 50·1 | 48·3 | 48·0 | 42·1 | 40·2 | 30·3 |

*Diurnal Range of the Mean Temperature of Evaporation.*—The ranges of the means, Table VIII., are as follow :—

| Jan. | Feb. | March. | April. | May. | June. | July. | Aug. | Sept. | Oct. | Nov. | Dec. |
|---|---|---|---|---|---|---|---|---|---|---|---|
| 4°·8 | 5°·8 | 6°·9 | 8°·9 | 9°·3 | 7°·6 | 7°·7 | 8°·1 | 7°·9 | 6°9 | 2°·7 | 3°·0 |

TABLE IX.—Hourly Means of the Temperature of Evaporation for each Astronomical Quarter, and for the Year 1844.

| Mak. M. T. | Nov. Dec. Jan. | Feb. March April. | May June July. | Aug. Sept. Oct. | Year 1844. | Mak. M. T. | Nov. Dec. Jan. | Feb. March April. | May June July. | Aug. Sept. Oct. | Year 1844. |
|---|---|---|---|---|---|---|---|---|---|---|---|
| h. | ° | ° | ° | ° | ° | h. | ° | ° | ° | ° | ° |
| 12 | 35·13 | 34·37 | 46·23 | 45·87 | 40·40 | 0 | 37·77 | 40·33 | 52·90 | 51·73 | 45·68 |
| 13 | 35·13 | 34·30 | 45·80 | 45·57 | 40·20 | 1 | 38·23 | 40·53 | 53·07 | 51·93 | 45·94 |
| 14 | 35·07 | 34·00 | 45·40 | 45·17 | 39·91 | 2 | 37·97 | 40·63 | 53·10 | 51·97 | 45·92 |
| 15 | 34·97 | 33·80 | 45·10 | 44·87 | 39·68 | 3 | 37·33 | 40·17 | 52·97 | 51·80 | 45·57 |
| 16 | 34·93 | 33·63 | 45·17 | 44·60 | 39·58 | 4 | 36·43 | 39·40 | 52·43 | 51·17 | 44·86 |
| 17 | 34·87 | 33·77 | 46·00 | 44·47 | 39·77 | 5 | 35·90 | 38·40 | 52·00 | 50·13 | 44·11 |
| 18 | 35·00 | 33·97 | 47·50 | 45·17 | 40·41 | 6 | 35·53 | 37·33 | 51·13 | 49·43 | 43·36 |
| 19 | 35·13 | 34·87 | 48·83 | 46·47 | 41·32 | 7 | 35·50 | 36·60 | 50·23 | 48·63 | 42·74 |
| 20 | 35·27 | 36·10 | 49·90 | 48·17 | 42·36 | 8 | 35·27 | 36·03 | 49·13 | 47·97 | 42·10 |
| 21 | 35·70 | 37·60 | 50·57 | 49·57 | 43·36 | 9 | 35·27 | 35·37 | 48·27 | 47·17 | 41·52 |
| 22 | 36·40 | 39·03 | 51·50 | 50·70 | 44·41 | 10 | 35·10 | 35·07 | 47·53 | 46·60 | 41·07 |
| 23 | 37·17 | 39·83 | 52·43 | 51·47 | 45·22 | 11 | 35·20 | 34·93 | 47·00 | 46·13 | 40·82 |

The ranges of the means for the astronomical quarters and for the year are

Winter, 3°·36 Spring, 7°·00 Summer, 8°·00 Autumn, 7°·50 Year, 6°·36

The ranges of the temperature of evaporation follow nearly the same law as the ranges of the temperature of the air. The ranges for June and July are less than those for April, May, August, and September.

## PRESSURE OF AQUEOUS VAPOUR.

TABLE X.—Daily, Weekly, and Monthly Means of the Pressure of Aqueous Vapour, in inches of Mercury, as deduced from Tables I. and VII.

| Civil Day. | Jan. | Feb. | March. | April. | May. | June. | July. | Aug. | Sept. | Oct. | Nov. | Dec. |
|---|---|---|---|---|---|---|---|---|---|---|---|---|
| | in. | in. | in. | in. | in. | in. | in. | in. | in. | in. | in. | in. |
| 1 | 0·168 | 0·150 | 0·211 | 0·263 | 0·252 | 0·303 | 0·338 | 0·370 | [0·390] | 0·330 | 0·239 | [0·230] |
| 2 | ·147 | ·186 | ·197 | ·289 | ·307 | [ ·323] | ·321 | ·349 | ·387 | ·316 | ·218 | ·226 |
| 3 | ·184 | ·170 | [ ·183] | ·266 | ·273 | ·285 | ·347 | ·336 | ·390 | ·325 | [ ·254] | ·221 |
| 4 | ·216 | [ ·162] | ·181 | ·242 | ·296 | ·340 | ·318 | [ ·368] | ·424 | ·282 | ·238 | ·183 |
| 5 | ·311 | ·151 | ·151 | ·230 | [ ·291] | ·415 | ·345 | ·393 | ·440 | ·281 | ·265 | ·156 |
| 6 | ·277 | ·139 | ·159 | ·223 | ·326 | ·433 | ·356 | ·384 | ·472 | [ ·272] | ·278 | ·136 |
| 7 | [ ·243] | ·177 | ·165 | [ ·266] | ·286 | ·423 | [ ·352] | ·378 | ·479 | ·215 | ·261 | ·137 |
| 8 | ·224 | ·183 | ·198 | ·303 | ·258 | ·382 | ·334 | ·358 | [ ·400] | ·235 | ·289 | [ ·165] |
| 9 | ·194 | ·203 | ·257 | ·355 | ·280 | [ ·374] | ·376 | ·322 | ·351 | ·292 | ·281 | ·186 |
| 10 | ·234 | ·167 | [ ·196] | ·242 | ·303 | ·325 | ·382 | ·308 | ·314 | ·336 | [ ·259] | ·192 |
| 11 | ·253 | [ ·201] | ·222 | ·216 | ·336 | ·321 | ·346 | [ ·354] | ·344 | ·328 | ·219 | ·181 |
| 12 | ·261 | ·180 | ·174 | ·257 | [ ·300] | ·363 | ·323 | ·380 | ·295 | ·335 | ·227 | ·164 |
| 13 | ·198 | ·210 | ·163 | ·263 | ·324 | ·401 | ·364 | ·384 | ·315 | [ ·318] | ·275 | ·160 |
| 14 | [ ·214] | ·263 | ·174 | [ ·255] | ·302 | ·332 | [ ·330] | ·373 | ·387 | ·321 | ·242 | ·197 |
| 15 | ·166 | ·243 | ·197 | ·303 | ·253 | ·309 | ·314 | ·388 | [ ·337] | ·300 | ·309 | [ ·200] |
| 16 | ·188 | ·202 | ·171 | ·221 | ·259 | [ ·346] | ·303 | ·367 | ·393 | ·287 | ·326 | ·210 |
| 17 | ·220 | ·233 | [ ·188] | ·269 | ·202 | ·333 | ·333 | ·352 | ·358 | ·270 | [ ·304] | ·237 |
| 18 | ·230 | [ ·191] | ·174 | ·231 | ·188 | ·370 | ·347 | [ ·356] | ·275 | ·231 | ·317 | ·232 |
| 19 | ·198 | ·192 | ·221 | ·306 | [ ·235] | ·334 | ·320 | ·368 | ·305 | ·219 | ·340 | ·193 |
| 20 | ·166 | ·141 | ·192 | ·345 | ·217 | ·327 | ·310 | ·338 | ·285 | [ ·231] | ·290 | ·147 |
| 21 | [ ·204] | ·134 | ·176 | [ ·269] | ·271 | ·413 | [ ·390] | ·324 | ·253 | ·223 | ·229 | ·169 |
| 22 | ·210 | ·126 | ·250 | ·268 | ·274 | ·379 | ·447 | ·366 | [ ·282] | ·235 | ·189 | [ ·176] |
| 23 | ·216 | ·156 | ·232 | ·262 | ·272 | [ ·370] | ·430 | ·369 | ·269 | ·207 | ·227 | ·180 |
| 24 | ·202 | ·181 | [ ·243] | ·202 | ·270 | ·466 | ·489 | ·352 | ·288 | ·209 | [ ·224] | ·184 |
| 25 | ·255 | [ ·162] | ·251 | ·277 | ·244 | ·334 | ·430 | [ ·327] | ·290 | ·284 | ·185 | ·182 |
| 26 | ·223 | ·162 | ·249 | ·240 | [ ·262] | ·304 | ·444 | ·296 | ·384 | ·275 | ·224 | ·185 |
| 27 | ·284 | ·151 | ·298 | ·209 | ·257 | ·289 | ·471 | ·271 | ·416 | [ ·264] | ·292 | ·191 |
| 28 | [ ·227] | ·195 | ·224 | [ ·236] | ·265 | ·342 | [ ·409] | ·311 | ·373 | ·253 | ·280 | ·181 |
| 29 | ·237 | ·199 | ·291 | ·242 | ·262 | ·336 | ·343 | ·345 | [ ·350] | ·276 | ·253 | [ ·194] |
| 30 | ·200 | | ·253 | ·197 | ·298 | [ ·329] | ·375 | ·372 | ·280 | ·290 | ·218 | ·213 |
| 31 | ·164 | | [ ·264] | | ·296 | | ·394 | ·420 | | ·284 | | ·210 |
| Mean | 0·216 | 0·180 | 0·209 | 0·258 | 0·273 | 0·354 | 0·367 | 0·355 | 0·351 | 0·276 | 0·258 | 0·187 |

*Annual Variation of the Pressure of Aqueous Vapour.*—This variation follows the same law as that of the temperature of the air. The pressure is a maximum in July and a minimum in February and December. The means for the meteorological seasons are—

| | | in. | | | in. |
|---|---|---|---|---|---|
| Winter, | Dec., Jan., Feb., | 0·195 | Summer, | June, July, Aug. | 0·359 |
| Spring, | March, April, May, | 0·247 | Autumn, | Sept., Oct., Nov. | 0·294 |

The mean pressure of aqueous vapour for the year 1844 = 0·274 in.

TABLE XI.—Pressure of Aqueous Vapour, with reference to the Moon's Age and Declination, for 1844.

| Moon's Age. | Mean Pressure of Vapour. | Moon's Age. | Mean Pressure of Vapour. | After Moon farthest North. | Mean Pressure of Vapour. | After Moon farthest North. | Mean Pressure of Vapour. |
|---|---|---|---|---|---|---|---|
| Day. | in. | Day. | in. | Day. | in. | Day. | in. |
| 15 | 0·283 | 0 | 0·261 | 0 | 0·270 | 14 | 0·287 |
| 16 | ·286 | 1 | ·257 | 1 | ·285 | 15 | ·289 |
| 17 | ·287 | 2 | ·272 | 2 | ·291 | 16 | ·270 |
| 18 | ·275 | 3 | ·268 | 3 | ·276 | 17 | ·262 |
| 19 | ·292 | 4 | ·269 | 4 | ·274 | 18 | ·275 |
| 20 | ·296 | 5 | ·281 | 5 | ·259 | 19 | ·279 |
| 21 | ·298 | 6 | ·283 | 6 | ·266 | 20 | ·284 |
| 22 | ·295 | 7 | ·275 | 7 | ·264 | 21 | ·287 |
| 23 | ·295 | 8 | ·295 | 8 | ·270 | 22 | ·280 |
| 24 | ·277 | 9 | ·285 | 9 | ·285 | 23 | ·273 |
| 25 | ·265 | 10 | ·266 | 10 | ·276 | 24 | ·284 |
| 26 | ·267 | 11 | ·261 | 11 | ·281 | 25 | ·285 |
| 27 | ·273 | 12 | ·258 | 12 | ·271 | 26 | ·278 |
| 28 | ·278 | 13 | ·252 | 13 | ·275 | 27 | ·273 |
| 29 | ·271 | 14 | ·270 | | | | |

This Table has been formed from Table X., in the manner already described for Table II. of the Magnetical Results.

*Pressure of Aqueous Vapour with reference to the Moon's Age.*—The following are means of groups :—

| | in. | | in. |
|---|---|---|---|
| 12 days till 18 days, Full Moon, | 0·273 | 27 days till 3 days, New Moon, | 0·269 |
| 15 ..... 22 ... | 0·289 | 0 ..... 7 ... | 0·271 |
| 19 ..... 26 ... | 0·286 | 4 ..... 11 ... | 0·277 |
| 23 ..... 29 ... | 0·275 | 8 ..... 14 ... | 0·270 |

These means, on the whole, give nearly the same result as was obtained from the observations for 1843 (p. 271.) The maximum pressure occurs about four days after full moon, and the minimum occurs after new moon.

*Pressure of Aqueous Vapour with reference to the Moon's Declination.*—The following are means of groups :—

| | in. | | in. |
|---|---|---|---|
| 25 days till 3 days, Moon farthest North, | 0·280 | 11 days till 17 days, Moon farthest South, | 0·276 |
| 0 ..... 6 ... | 0·274 | 14 ..... 20 ... | 0·278 |
| 4 ..... 10 ... | 0·271 | 18 ..... 24 ... | 0·280 |
| 7 ..... 13 ... | 0·275 | 21 ..... 27 ... | 0·280 |

From these means the pressure of aqueous vapour was a minimum about six days after the moon was farthest north, and a maximum about four days before it was farthest north.

*Diurnal Variation of the Pressure of Aqueous Vapour.*—The diurnal variation is somewhat irregular in several months of the year, presenting secondary maxima and minima at different hours. The principal maximum pressure occurs as early as $10^h\ 30^m$ A.M. in September, and as late as $3^h\ 10^m$ P.M. in August and May. The following are the epochs of maxima and minima for each of the astronomical quarters, as obtained from Table XIII. :—

| | Winter. | Spring. | Summer. | Autumn. | Year. |
|---|---|---|---|---|---|
| Min. | $7^h$ P.M.—$6^h$ A.M | $4^h\ 10^m$ A.M. | $4^h\ 10^m$ A.M. | $5^h\ 10^m$ A.M | $4^h\ 10^m$ A.M. |
| Max. | $1^h\ 10^m$ P.M. | $0^h\ 10^m$ P.M. | $0^h$ and $2^h$ P.M. | $11^h\ 10^m$ A.M. and $3^h\ 10^m$ P.M. | $1^h\ 10^m$ P.M. |

The pressure is constant in the winter quarter from $7^h$ P.M. till $6^h$ A.M.; and in the mean for the year the pressure is nearly constant from $11^h$ A.M. till $3^h$ P.M.

The mean tension of aqueous vapour for the year occurs at $7^h\ 50^m$ A.M.
..... $8^h\ 30^m$ P.M.

The interval between the two epochs of mean tension is $12^h\ 40^m$

TABLE XII.—Hourly Means of the Pressure of Aqueous Vapour for each Month in 1844, as deduced from Tables II. and VIII.

| Mak. M. T. | Jan. | Feb. | March. | April. | May. | June. | July. | Aug. | Sept. | Oct. | Nov. | Dec. |
|---|---|---|---|---|---|---|---|---|---|---|---|---|
| h. | in. | in. | in. | in. | in. | in. | in. | in. | in. | in. | in. | in. |
| 12 | 0·202 | 0·167 | 0·197 | 0·250 | 0·263 | 0·335 | 0·347 | 0·340 | 0·332 | 0·263 | 0·252 | 0·185 |
| 13 | ·202 | ·167 | ·197 | ·251 | ·258 | ·330 | ·344 | ·336 | ·327 | ·263 | ·251 | ·184 |
| 14 | ·201 | ·167 | ·199 | ·243 | ·253 | ·330 | ·340 | ·332 | ·322 | ·259 | ·253 | ·184 |
| 15 | ·204 | ·169 | ·196 | ·238 | ·249 | ·330 | ·338 | ·328 | ·319 | ·259 | ·252 | ·182 |
| 16 | ·204 | ·169 | ·193 | ·239 | ·249 | ·327 | ·337 | ·326 | ·314 | ·258 | ·252 | ·183 |
| 17 | ·204 | ·172 | ·193 | ·240 | ·254 | ·333 | ·345 | ·326 | ·313 | ·252 | ·251 | ·183 |
| 18 | ·206 | ·170 | ·191 | ·245 | ·262 | ·344 | ·359 | ·336 | ·318 | ·255 | ·253 | ·183 |
| 19 | ·208 | ·169 | ·202 | ·258 | ·270 | ·348 | ·370 | ·351 | ·340 | ·256 | ·253 | ·182 |
| 20 | ·213 | ·174 | ·208 | ·266 | ·279 | ·353 | ·370 | ·364 | ·355 | ·268 | ·254 | ·181 |
| 21 | ·217 | ·181 | ·210 | ·271 | ·279 | ·355 | ·372 | ·368 | ·365 | ·278 | ·259 | ·181 |
| 22 | ·217 | ·184 | ·216 | ·278 | ·284 | ·364 | ·374 | ·370 | ·374 | ·286 | ·262 | ·187 |
| 23 | ·224 | ·186 | ·216 | ·282 | ·285 | ·373 | ·376 | ·370 | ·374 | ·292 | ·264 | ·190 |
| 0 | ·227 | ·187 | ·220 | ·280 | ·284 | ·383 | ·382 | ·366 | ·365 | ·291 | ·261 | ·194 |
| 1 | ·232 | ·186 | ·216 | ·278 | ·283 | ·380 | ·381 | ·368 | ·362 | ·293 | ·263 | ·196 |
| 2 | ·229 | ·188 | ·217 | ·275 | ·290 | ·373 | ·387 | ·371 | ·367 | ·290 | ·259 | ·195 |
| 3 | ·226 | ·186 | ·216 | ·268 | ·291 | ·373 | ·384 | ·378 | ·369 | ·287 | ·258 | ·191 |
| 4 | ·218 | ·183 | ·213 | ·268 | ·286 | ·368 | ·377 | ·373 | ·366 | ·285 | ·255 | ·187 |
| 5 | ·215 | ·184 | ·212 | ·265 | ·286 | ·369 | ·382 | ·369 | ·366 | ·280 | ·251 | ·183 |
| 6 | ·210 | ·179 | ·208 | ·256 | ·283 | ·368 | ·372 | ·375 | ·361 | ·276 | ·252 | ·182 |
| 7 | ·209 | ·178 | ·209 | ·253 | ·280 | ·359 | ·375 | ·368 | ·359 | ·277 | ·252 | ·182 |
| 8 | ·208 | ·178 | ·207 | ·249 | ·281 | ·351 | ·373 | ·370 | ·353 | ·271 | ·251 | ·181 |
| 9 | ·209 | ·173 | ·203 | ·249 | ·276 | ·347 | ·365 | ·354 | ·348 | ·268 | ·250 | ·181 |
| 10 | ·207 | ·174 | ·204 | ·246 | ·271 | ·343 | ·361 | ·349 | ·340 | ·266 | ·249 | ·182 |
| 11 | ·209 | ·174 | ·203 | ·249 | ·267 | ·339 | ·357 | ·333 | ·337 | ·266 | ·249 | ·181 |

TABLE XIII.—Hourly Means of the Pressure of Aqueous Vapour for each Astronomical Quarter, and for the Year 1844.

| Mak. M. T. | Nov. Dec. Jan. | Feb. March April. | May June July. | Aug. Sept. Oct. | Year 1844. | Mak. M. T. | Nov. Dec. Jan. | Feb. March April. | May June July. | Aug. Sept. Oct. | Year 1844. |
|---|---|---|---|---|---|---|---|---|---|---|---|
| h. | in. | in. | in. | in. | in. | h. | in. | in. | in. | in. | in. |
| 12 | 0·213 | 0·205 | 0·315 | 0·312 | 0·261 | 0 | 0·227 | 0·229 | 0·350 | 0·341 | 0·287 |
| 13 | ·212 | ·205 | ·311 | ·309 | ·259 | 1 | ·230 | ·227 | ·348 | ·341 | ·287 |
| 14 | ·213 | ·203 | ·308 | ·304 | ·257 | 2 | ·228 | ·227 | ·350 | ·343 | ·287 |
| 15 | ·213 | ·201 | ·306 | ·302 | ·255 | 3 | ·225 | ·223 | ·349 | ·345 | ·286 |
| 16 | ·213 | ·200 | ·304 | ·299 | ·254 | 4 | ·220 | ·221 | ·344 | ·341 | ·282 |
| 17 | ·213 | ·202 | ·311 | ·297 | ·255 | 5 | ·216 | ·220 | ·346 | ·338 | ·280 |
| 18 | ·214 | ·202 | ·322 | ·303 | ·260 | 6 | ·215 | ·214 | ·341 | ·337 | ·277 |
| 19 | ·214 | ·210 | ·329 | ·316 | ·267 | 7 | ·214 | ·213 | ·338 | ·335 | ·275 |
| 20 | ·216 | ·216 | ·334 | ·329 | ·274 | 8 | ·213 | ·211 | ·335 | ·331 | ·273 |
| 21 | ·219 | ·221 | ·335 | ·337 | ·278 | 9 | ·213 | ·208 | ·329 | ·323 | ·269 |
| 22 | ·222 | ·226 | ·341 | ·343 | ·283 | 10 | ·213 | ·208 | ·325 | ·318 | ·266 |
| 23 | ·226 | ·228 | ·345 | ·345 | ·286 | 11 | ·213 | ·209 | ·321 | ·312 | ·264 |

*Diurnal Range of the Hourly Means of the Tension of Aqueous Vapour.*—The following are the ranges of the hourly means for each month of 1844 :—

| Jan. | Feb. | March. | April. | May. | June. | July. | Aug. | Sept. | Oct. | Nov. | Dec. |
|---|---|---|---|---|---|---|---|---|---|---|---|
| in. | in. | in. | in. | in. | in. | in. | in. | in. | in. | in. | in. |
| 0·031 | 0·021 | 0·029 | 0·044 | 0·042 | 0·056 | 0·050 | 0·052 | 0·061 | 0·041 | 0·015 | 0·015 |

The diurnal range is greatest in September and least in November and December. The diurnal ranges for each of the astronomical quarters and for the year are—

| | in. | | in. | | in. | | in. | | in. |
|---|---|---|---|---|---|---|---|---|---|
| Winter, | 0·018 | Spring, | 0·029 | Summer, | 0·046 | Autumn, | 0·048 | Year, | 0·033 |

*The Extremes of Daily Mean Pressure and their Ranges* for each month are as follow :—

| | Jan. | Feb. | March. | April. | May. | June. | July. | Aug. | Sept. | Oct. | Nov. | Dec. |
|---|---|---|---|---|---|---|---|---|---|---|---|---|
| | in. | in. | in. | in. | in. | in. | in. | in. | in. | in. | in. | in. |
| Greatest, | 0·311 | 0·263 | 0·298 | 0·355 | 0·336 | 0·466 | +0·489 | 0·420 | 0·479 | 0·336 | 0·340 | 0·237 |
| Least, | 0·147 | −0·126 | 0·151 | 0·197 | 0·188 | 0·285 | 0·303 | 0·271 | 0·253 | 0·215 | 0·185 | 0·136 |
| Range, | 0·164 | 0·137 | 0·147 | 0·158 | 0·148 | 0·181 | 0·186 | 0·149 | +0·226 | 0·121 | 0·155 | −0·101 |

The maximum and minimum of daily mean pressure for the year are indicated by + and − and the greatest and least monthly ranges of the daily means are similarly marked.

## RELATIVE HUMIDITY.

TABLE XIV.—Mean Relative Humidity for each Civil Day, Week, and Month of 1844, Saturation being = 1.

| Civil Day. | Jan. | Feb. | March. | April. | May. | June. | July. | Aug. | Sept. | Oct. | Nov. | Dec. |
|---|---|---|---|---|---|---|---|---|---|---|---|---|
| 1 | 0·913 | 0·829 | 0·858 | 0·859 | 0·628 | 0·863 | 0·849 | 0·828 | [0·815] | 0·803 | 0·745 | [0·910] |
| 2 | ·919 | ·969 | ·845 | ·873 | ·706 | [ ·837] | ·748 | ·790 | ·769 | ·763 | ·719 | ·950 |
| 3 | ·864 | ·909 | [ ·826] | ·861 | ·700 | ·723 | ·828 | ·870 | ·899 | ·758 | [ ·829] | ·957 |
| 4 | ·986 | [ ·919] | ·830 | ·917 | ·916 | ·811 | ·855 | [ ·836] | ·850 | ·768 | ·826 | ·915 |
| 5 | ·975 | ·938 | ·791 | ·906 | [ ·750] | ·904 | ·833 | ·814 | ·891 | ·889 | ·914 | ·969 |
| 6 | ·962 | ·959 | ·783 | ·868 | ·734 | ·825 | ·873 | ·848 | ·961 | [ ·801] | ·949 | ·965 |
| 7 | [ ·956] | ·908 | ·809 | [ ·857] | ·735 | ·858 | [ ·837] | ·865 | ·894 | ·782 | ·946 | ·913 |
| 8 | ·949 | ·893 | ·896 | ·863 | ·711 | ·750 | ·764 | ·796 | [ ·861] | ·808 | ·957 | [ ·952] |
| 9 | ·919 | ·923 | ·826 | ·892 | ·747 | [ ·781] | ·864 | ·747 | ·809 | ·804 | ·904 | ·979 |
| 10 | ·944 | ·831 | [ ·821] | ·699 | ·894 | ·752 | ·834 | ·766 | ·771 | ·832 | [ ·913] | ·937 |
| 11 | ·948 | [ ·911] | ·838 | ·681 | ·921 | ·735 | ·751 | [ ·811] | ·843 | ·896 | ·855 | ·948 |
| 12 | ·932 | ·928 | ·806 | ·851 | [ ·794] | ·764 | ·753 | ·841 | ·743 | ·903 | ·869 | ·868 |
| 13 | ·908 | ·955 | ·751 | ·743 | ·711 | ·812 | ·894 | ·889 | .831 | [ ·859] | ·948 | ·874 |
| 14 | [ ·947] | ·939 | ·757 | [ ·759] | ·782 | ·760 | [ ·793] | ·829 | ·967 | ·879 | ·867 | ·908 |
| 15 | ·965 | ·835 | ·947 | ·817 | ·709 | ·746 | ·833 | ·878 | [ ·856] | ·840 | ·842 | [ ·917] |
| 16 | ·974 | ·765 | ·826 | ·713 | ·710 | [ ·843] | ·716 | ·844 | ·822 | ·806 | ·860 | ·925 |
| 17 | ·957 | ·857 | [ ·841] | ·751 | ·716 | ·876 | ·814 | ·871 | ·955 | ·780 | [ ·863] | ·979 |
| 18 | ·821 | [ ·822] | ·883 | ·681 | ·715 | ·951 | ·798 | [ ·831] | ·816 | ·773 | ·843 | ·951 |
| 19 | ·756 | ·850 | ·840 | ·793 | [ ·738] | ·915 | ·773 | ·870 | ·854 | ·890 | ·916 | ·960 |
| 20 | ·769 | ·783 | ·793 | ·839 | ·664 | ·824 | ·733 | ·741 | ·833 | [ ·863] | ·848 | ·993 |
| 21 | [ ·851] | ·843 | ·769 | [ ·744] | ·786 | ·860 | [ ·781] | ·783 | ·866 | ·910 | ·920 | ·960 |
| 22 | ·875 | ·863 | ·877 | ·795 | ·838 | ·764 | ·779 | ·920 | [ ·847] | ·914 | ·955 | [ ·931] |
| 23 | ·952 | ·876 | ·859 | ·749 | ·832 | [ ·852] | ·725 | ·848 | ·891 | ·912 | ·876 | ·822 |
| 24 | ·931 | ·943 | [ ·831] | ·607 | ·763 | ·934 | ·881 | ·850 | ·796 | ·925 | ·914] | ·915 |
| 25 | ·892 | [ ·882] | ·878 | ·767 | ·685 | ·877 | ·725 | [ ·809] | ·843 | ·925 | ·974 | ·938 |
| 26 | ·814 | ·900 | ·781 | ·700 | [ ·784] | ·852 | ·831 | ·724 | ·842 | ·833 | ·929 | ·925 |
| 27 | ·828 | ·839 | ·823 | ·649 | ·784 | ·745 | ·804 | ·749 | ·870 | [ ·894] | ·832 | ·985 |
| 28 | [ ·838] | ·874 | ·778 | [ ·671] | ·839 | ·769 | [ ·822] | ·762 | ·876 | ·941 | ·856 | ·995 |
| 29 | ·832 | ·850 | ·848 | ·676 | ·799 | ·796 | ·739 | ·793 | [ ·827] | ·899 | ·891 | [ ·968] |
| 30 | ·797 | | ·838 | ·604 | ·861 | [ ·789] | ·937 | ·783 | ·809 | ·843 | ·893 | ·955 |
| 31 | 868 | | [ ·843] | | ·860 | | ·895 | ·795 | | ·821 | | ·968 |
| Mean | 0·935 | 0·882 | 0.828 | 0·775 | 0·768 | 0·819 | 0·808 | 0·818 | 0·852 | 0·848 | 0·882 | 0·941 |

*Annual Variation of the Relative Humidity.*—The relative humidity is a minimum in April and May, and a maximum in December and January. The following are the means for the meteorological seasons :—

| | | | | | |
|---|---|---|---|---|---|
| Winter, | Dec., Jan., Feb., | 0·919 | Summer, | June, July, Aug., | 0·815 |
| Spring, | March, April, May, | 0·790 | Autumn, | Sept., Oct., Nov., | 0·861 |

The mean relative humidity for 1844 = 0·846.

TABLE XV.—Mean Relative Humidity, Saturation being = 1, with reference to the Moon's Age and Declination.

| Moon's Age. | Mean Relative Humidity. | Moon's Age. | Mean Relative Humidity. | After Moon farthest North. | Mean Relative Humidity. | After Moon farthest North. | Mean Relative Humidity. |
|---|---|---|---|---|---|---|---|
| Day. | | Day. | | Day. | | Day. | |
| 15 | 0·869 | 0 | 0·830 | 0 | 0·810 | 14 | 0·861 |
| 16 | ·851 | 1 | ·821 | 1 | ·834 | 15 | ·825 |
| 17 | ·857 | 2 | ·851 | 2 | ·827 | 16 | ·802 |
| 18 | ·851 | 3 | ·844 | 3 | ·846 | 17 | ·805 |
| 19 | ·856 | 4 | ·838 | 4 | ·847 | 18 | ·846 |
| 20 | ·845 | 5 | ·856 | 5 | ·827 | 19 | ·847 |
| 21 | ·836 | 6 | ·825 | 6 | ·840 | 20 | ·859 |
| 22 | ·829 | 7 | ·814 | 7 | ·834 | 21 | ·844 |
| 23 | ·866 | 8 | ·840 | 8 | ·842 | 22 | ·836 |
| 24 | ·834 | 9 | ·849 | 9 | ·867 | 23 | ·834 |
| 25 | ·839 | 10 | ·826 | 10 | ·863 | 24 | ·824 |
| 26 | ·843 | 11 | ·842 | 11 | ·839 | 25 | ·855 |
| 27 | ·844 | 12 | ·830 | 12 | ·860 | 26 | ·844 |
| 28 | ·839 | 13 | ·827 | 13 | ·869 | 27 | ·827 |
| 29 | ·828 | 14 | ·828 | | | | |

*Humidity with reference to the Moon's Age.*—The following means of groups indicate that the humidity was greatest a few days after full moon, and least between new moon and full moon :—

| | | | | | |
|---|---|---|---|---|---|
| 12 days till 18 days, Full Moon, | 0·845 | | 27 days till 3 days, New Moon, | 0·837 |
| 15 ..... 22 ... | 0·849 | | 0 ..... 7 ... | 0·835 |
| 19 ..... 26 ... | 0·844 | | 4 ..... 11 ... | 0·836 |
| 23 ..... 29 ... | 0·842 | | 8 ..... 14 ... | 0·835 |

The results for 1843 and 1844 agree in making the humidity greatest about the third, and least about the first quarter.

*Humidity with reference to the Moon's Declination.*—The means of groups are—

| | | | | |
|---|---|---|---|---|
| 25 days till 3 days, Moon farthest North, | 0·835 | | 11 days till 17 days, Moon farthest South, | 0·837 |
| 0 ..... 6 ... | 0·833 | | 14 ..... 20 ... | 0·835 |
| 4 ..... 10 ... | 0·846 | | 18 ..... 24 ... | 0·841 |
| 7 ..... 13 ... | 0·853 | | 21 ..... 27 ... | 0·838 |

These means indicate a maximum before the moon is farthest south, and a minimum after it is farthest south. The result does not agree with that for 1843.

TABLE XVI.—Hourly Means of the Relative Humidity for each Month in 1843, Saturation being = 1.

| Mak. M. T. | Jan. | Feb. | March. | April. | May. | June. | July. | Aug. | Sept. | Oct. | Nov. | Dec. |
|---|---|---|---|---|---|---|---|---|---|---|---|---|
| h. | | | | | | | | | | | | |
| 12 | 0·898 | 0·903 | 0·879 | 0·883 | 0·907 | 0·910 | 0·916 | 0·912 | 0·935 | 0·901 | 0·894 | 0·949 |
| 13 | ·898 | ·898 | ·883 | ·900 | ·893 | ·909 | ·937 | ·921 | ·934 | ·901 | ·884 | ·948 |
| 14 | ·897 | ·913 | ·888 | ·893 | ·900 | ·922 | ·937 | ·920 | ·933 | ·906 | ·897 | ·948 |
| 15 | ·915 | ·918 | ·887 | ·885 | ·899 | ·930 | ·944 | ·927 | ·941 | ·906 | ·894 | ·948 |
| 16 | ·915 | ·918 | ·885 | ·898 | ·899 | ·903 | ·936 | ·934 | ·937 | ·905 | ·900 | ·953 |
| 17 | ·932 | ·920 | ·894 | ·899 | ·885 | ·893 | ·918 | ·929 | ·932 | ·894 | ·893 | ·953 |
| 18 | ·924 | ·914 | ·893 | ·872 | ·845 | ·869 | ·886 | ·901 | ·927 | ·898 | ·900 | ·958 |
| 19 | ·916 | ·909 | ·906 | ·860 | ·806 | ·827 | ·845 | ·877 | ·916 | ·892 | ·900 | ·948 |
| 20 | ·926 | ·921 | ·878 | ·813 | ·784 | ·795 | ·784 | ·843 | ·872 | ·873 | ·901 | ·948 |
| 21 | ·927 | ·900 | ·826 | ·753 | ·736 | ·775 | ·758 | ·788 | ·830 | ·845 | ·887 | ·948 |
| 22 | ·893 | ·852 | ·800 | ·706 | ·714 | ·746 | ·732 | ·746 | ·801 | ·812 | ·873 | ·949 |
| 23 | ·882 | ·823 | ·766 | ·684 | ·674 | ·717 | ·701 | ·712 | ·766 | ·783 | ·860 | ·931 |
| 0 | ·857 | ·810 | ·753 | ·662 | ·643 | ·735 | ·703 | ·679 | ·729 | ·750 | ·834 | ·924 |
| 1 | ·859 | ·782 | ·725 | ·653 | ·622 | ·714 | ·700 | ·676 | ·713 | ·746 | ·827 | ·907 |
| 2 | ·851 | ·790 | ·721 | ·641 | ·633 | ·717 | ·706 | ·683 | ·725 | ·736 | ·820 | ·915 |
| 3 | ·863 | ·816 | ·720 | ·634 | ·638 | ·740 | ·693 | ·699 | ·741 | ·753 | ·843 | ·927 |
| 4 | ·872 | ·836 | ·737 | ·663 | ·647 | ·742 | ·702 | ·701 | ·766 | ·785 | ·859 | ·944 |
| 5 | ·885 | ·893 | ·777 | ·692 | ·678 | ·769 | ·730 | ·741 | ·815 | ·828 | ·872 | ·929 |
| 6 | ·894 | ·891 | ·812 | ·709 | ·713 | ·803 | ·743 | ·794 | ·847 | ·844 | ·878 | ·938 |
| 7 | ·889 | ·899 | ·846 | ·762 | ·761 | ·820 | ·789 | ·842 | ·880 | ·871 | ·878 | ·938 |
| 8 | ·893 | ·913 | ·862 | ·781 | ·822 | ·846 | ·848 | ·892 | ·907 | ·869 | ·890 | ·943 |
| 9 | ·897 | ·896 | ·868 | ·825 | ·852 | ·872 | ·867 | ·894 | ·916 | ·884 | ·893 | ·938 |
| 10 | ·896 | ·916 | ·883 | ·842 | ·869 | ·889 | ·898 | ·914 | ·924 | ·884 | ·892 | ·948 |
| 11 | ·901 | ·911 | ·883 | ·877 | ·884 | ·899 | ·902 | ·893 | ·931 | ·884 | ·886 | ·943 |

TABLE XVII.—Hourly Means of the Relative Humidity for each Astronomical Quarter, and for the Year 1844.

| Mak. M. T. | Nov. Dec. Jan. | Feb. March April. | May June July. | Aug. Sept. Oct. | Year 1844. | Mak. M. T. | Nov. Dec. Jan. | Feb. March April. | May June July. | Aug. Sept. Oct. | Year 1844. |
|---|---|---|---|---|---|---|---|---|---|---|---|
| h. | | | | | | h. | | | | | |
| 12 | 0·914 | 0·888 | 0·911 | 0·916 | 0·907 | 0 | 0·872 | 0·742 | 0·694 | 0·719 | 0·757 |
| 13 | ·910 | ·894 | ·913 | ·919 | ·909 | 1 | ·864 | ·720 | ·679 | ·712 | ·744 |
| 14 | ·914 | ·898 | ·920 | ·920 | ·913 | 2 | ·862 | ·717 | ·685 | ·715 | ·745 |
| 15 | ·919 | ·897 | ·928 | ·925 | ·916 | 3 | ·878 | ·723 | ·690 | ·731 | ·756 |
| 16 | ·923 | ·900 | ·913 | ·925 | ·915 | 4 | ·892 | ·745 | ·697 | ·751 | ·771 |
| 17 | ·926 | ·904 | ·899 | ·918 | ·912 | 5 | ·895 | ·787 | ·726 | ·795 | ·801 |
| 18 | ·927 | ·893 | ·867 | ·909 | ·899 | 6 | ·903 | ·804 | ·753 | ·828 | ·822 |
| 19 | ·921 | ·892 | ·826 | ·895 | ·883 | 7 | ·902 | ·836 | ·790 | ·864 | ·848 |
| 20 | ·925 | ·871 | ·788 | ·863 | ·861 | 8 | ·909 | ·852 | ·839 | ·889 | ·872 |
| 21 | ·921 | ·826 | ·756 | ·821 | ·831 | 9 | ·909 | ·863 | ·864 | ·898 | ·883 |
| 22 | ·905 | ·786 | ·731 | ·786 | ·802 | 10 | ·912 | ·880 | ·885 | ·907 | ·896 |
| 23 | ·891 | ·758 | ·697 | ·754 | ·775 | 11 | ·910 | ·890 | ·895 | ·903 | ·899 |

*Diurnal Variation of the Relative Humidity.*—The relative humidity is a minimum from noon to 3 P.M. in the different months of the year, occurring as early as $0^h\ 40^m$ P.M. in August, and as late as $3^h\ 10^m$ P.M. in November and April: it is a maximum in general about sunrise, though it varies little from sunset to sunrise in the winter months. The following are the epochs of maxima and minima for each of the astronomical quarters and for the year 1844:—

| | Winter. | Spring. | Summer. | Autumn. | Year. |
|---|---|---|---|---|---|
| Max. | $5^h\ 40^m$ A.M. | $5^h\ 10^m$ A.M. | $3^h\ 10^m$ A.M. | $3^h\ 40^m$ A.M. | $3^h\ 30^m$ A.M. |
| Min. | $1^h\ 45^m$ P.M. | $2^h\ 0^m$ P.M. | $1^h\ 10^m$ P.M. | $1^h\ 30^m$ P.M. | $1^h\ 35^m$ P.M. |

The mean value of the relative humidity occurs at $8^h\ 40^m$ A.M.
..... $7^h\ 12^m$ P.M.

The interval between the periods of mean humidity = $10^h\ 32^m$

*Diurnal Ranges of the Hourly Variations of Humidity for each Month.*—The ranges for each month from Table XVI. are—

| Jan. | Feb. | March. | April. | May. | June. | July. | Aug. | Sept. | Oct. | Nov. | Dec. |
|---|---|---|---|---|---|---|---|---|---|---|---|
| 0·081 | 0·138 | 0·186 | 0·266 | 0·285 | 0·216 | 0·251 | 0·258 | 0·228 | 0·170 | 0·080 | 0·051 |

The diurnal range is least in December and is greatest in April and August. The mean range of the diurnal variation of humidity is less for the midsummer months, June and July, than for the two preceding or two succeeding months.

*The Extremes of Daily Mean Humidity and their Ranges* are as follow for each month of 1844 :—

| | Jan. | Feb. | March. | April. | May. | June. | July. | Aug. | Sept. | Oct. | Nov. | Dec. |
|---|---|---|---|---|---|---|---|---|---|---|---|---|
| Greatest | 0·986 | 0·969 | 0·947 | 0·917 | 0·921 | 0·951 | 0·937 | 0·920 | 0·967 | 0·941 | 0·974 | 0·995 |
| Least, | 0·756 | 0·765 | 0·751 | 0·604 | 0·628 | 0·723 | 0·716 | 0·724 | 0·743 | 0·758 | 0·719 | 0·822 |
| Ranges, | 0·230 | 0·204 | 0·196 | 0·313 | 0·293 | 0·228 | 0·221 | 0·196 | 0·224 | 0·183 | 0·255 | 0·173 |

The greatest daily mean of relative humidity occurred on the 19th December when the air was nearly saturated, and the least occurred on the 30th April when the air contained only $\frac{6}{10}$ of its capacity. The greatest range of diurnal means for a month, is that for April, and the least is that for December.

## ATMOSPHERIC PRESSURE.

### TABLE XVIII.—Daily, Weekly, and Monthly Means of the Height of the Barometer in 1844.

| Civil Day. | Jan. | Feb. | March. | April. | May. | June. | July. | Aug. | Sept. | Oct. | Nov. | Dec. |
|---|---|---|---|---|---|---|---|---|---|---|---|---|
| | in. | in. | in. | in. | in. | in. | in. | in. | in. | in. | in. | in. |
| 1 | 29·224 | 29·725 | 28·828 | 29·936 | 30·208 | 29·886 | 29·645 | 29·302 | [30·011] | 29·592 | 29·508 | [29·941] |
| 2 | 29·433 | 29·429 | 28·818 | 29·638 | 30·226 | [29·812] | 29·670 | 29·502 | 30·098 | 29·169 | 29·433 | 29·890 |
| 3 | 29·432 | 29·804 | [29·220] | 29·445 | 30·094 | 29·856 | 29·640 | 29·314 | 30·070 | 29·266 | [29·405] | 30·047 |
| 4 | 29·389 | [29·377] | 29·266 | 29·427 | 30·146 | 29·750 | 29·556 | [29·292] | 30·040 | 29·553 | 29·342 | 30·142 |
| 5 | 29·038 | 29·235 | 29·542 | 29·472 | [29·924] | 29·531 | 29·490 | 29·539 | 29·898 | 29·426 | 29·270 | 30·015 |
| 6 | 28·851 | 29·238 | 29·688 | 29·818 | 29·678 | 29·367 | 29·617 | 29·102 | 29·716 | [29·388] | 29·224 | 30·019 |
| 7 | [29·492] | 28·833 | 29·983 | [29·828] | 29·647 | 29·352 | [29·593] | 28·992 | 29·595 | 29·647 | 29·234 | 30·112 |
| 8 | 29·774 | 28·761 | 29·798 | 30·077 | 29·751 | 29·600 | 29·652 | 29·100 | [29·663] | 29·486 | 29·049 | [30·016] |
| 9 | 29·982 | 28·918 | 29·393 | 30·170 | 29·733 | [29·586] | 29·654 | 29·350 | 29·520 | 28·948 | 28·739 | 30·060 |
| 10 | 29·921 | 29·424 | [29·503] | 30·003 | 29·718 | 29·640 | 29·589 | 29·418 | 29·564 | 28·853 | [29·032] | 30·074 |
| 11 | 30·084 | [29·371] | 28·993 | 29·600 | 29·879 | 29·838 | 29·477 | [29·277] | 29·685 | 29·254 | 28·878 | 29·814 |
| 12 | 29·852 | 29·731 | 29·175 | 29·478 | [29·971] | 29·720 | 29·558 | 29·362 | 29·744 | 29·309 | 29·066 | 29·763 |
| 13 | 29·940 | 29·769 | 29·675 | 29·357 | 30·117 | 29·399 | 29·347 | 29·308 | 29·862 | [28·937] | 29·228 | 29·472 |
| 14 | [30·018] | 29·625 | 29·566 | [29·637] | 30·168 | 29·493 | [29·546] | 29·125 | 29·731 | 28·824 | 29·769 | 29·434 |
| 15 | 30·168 | 29·537 | 29·325 | 29·653 | 30·210 | 29·639 | 29·524 | 29·425 | [29·704] | 28·619 | 29·533 | [29·472] |
| 16 | 30·067 | 29·740 | 29·688 | 29·874 | 29·904 | [29·610] | 29·687 | 29·564 | 29·437 | 28·763 | 29·830 | 29·338 |
| 17 | 30·000 | 29·671 | [29·629] | 29·860 | 29·842 | 29·841 | 29·683 | 29·423 | 29·859 | 29·035 | [29·754] | 29·261 |
| 18 | 29·830 | [29·461] | 29·982 | 29·910 | 29·924 | 29·595 | 29·481 | [29·523] | 29·589 | 29·410 | 29·819 | 29·567 |
| 19 | 29·625 | 29·088 | 29·739 | 30·015 | [29·976] | 29·696 | 29·571 | 29·792 | 29·928 | 29·241 | 29·796 | 30·081 |
| 20 | 29·777 | 29·483 | 29·476 | 29·966 | 29·985 | 29·627 | 29·886 | 29·501 | 30·013 | [29·387] | 29·777 | 30·286 |
| 21 | [29·786] | 29·245 | 29·675 | [29·876] | 30·049 | 29·500 | [29·717] | 29·432 | 30·078 | 29·377 | 30·079 | 30·314 |
| 22 | 29·713 | 29·332 | 29·279 | 29·869 | 30·154 | 29·447 | 29·861 | 29·390 | [29·943] | 29·630 | 30·018 | [30·166] |
| 23 | 29·858 | 29·197 | 29·328 | 29·759 | 30·101 | [29·536] | 29·759 | 29·386 | 29·810 | 29·631 | 29·875 | 30·118 |
| 24 | 29·913 | 29·028 | [29·378] | 29·736 | 29·981 | 29·499 | 29·745 | 29·539 | 29·876 | 29·655 | [29·927] | 30·128 |
| 25 | 29·831 | [29·097] | 29·079 | 29·859 | 30·015 | 29·542 | 29·750 | [29·633] | 29·955 | 29·770 | 29·831 | 30·068 |
| 26 | 29·979 | 28·764 | 29·355 | 29·783 | [30·030] | 29·604 | 29·800 | 29·750 | 29·906 | 29·943 | 29·925 | 29·906 |
| 27 | 29·859 | 29·109 | 29·554 | 29·997 | 30·147 | 29·665 | 29·948 | 29·833 | 29·816 | [29·838] | 29·835 | 29·830 |
| 28 | [29·641] | 29·152 | 30·081 | [30·011] | 30·018 | 29·746 | [29·631] | 29·903 | 29·701 | 30·070 | 29·685 | 29·706 |
| 29 | 29·410 | 29·177 | 30·243 | 30·078 | 29·920 | 29·835 | 29·691 | 29·901 | [29·685] | 29·910 | 29·861 | [29·868] |
| 30 | 29·290 | | 30·216 | 30·140 | 29·911 | [29·700] | 29·320 | 29·912 | 29·926 | 29·682 | 30·021 | 29·817 |
| 31 | 29·475 | | [29·926] | | 29·938 | | 29·275 | 30·046 | | 29·652 | | 29·918 |
| Mean | 29·693 | 29·321 | 29·529 | 29·805 | 29·980 | 29·627 | 29·625 | 29·489 | 29·817 | 29·397 | 29·563 | 29·892 |

*Annual Variation of Atmospheric Pressure.*—In 1844, the monthly mean of the height of the barometer was lowest in February, being 29·321 in.; and it was highest in May, being 29·980 in.: the range of the monthly means, therefore, was 0·659 in. The following are the mean pressures, in inches, of mercury at 32° for each of the meteorological quarters of 1844:—

| | | in. | | | in. |
|---|---|---|---|---|---|
| Winter,..... | Dec., Jan., Feb., | 29·635 | Summer,..... | June, July, Aug., | 29·580 |
| Spring,..... | March, April, May, | 29·771 | Autumn,..... | Sept., Oct., Nov., | 29·592 |

The mean pressure for the year 1844, = 29·645 in.

The pressure of the atmosphere was least in summer, and greatest in spring. The three consecutive months with the lowest mean pressure, are January, February, and March, the mean being 29·514 in.; and the three with the highest mean pressure are April, May, and June, the mean being = 29·804 in.

TABLE XIX.—Diurnal Range of the Barometer for each Civil Day, with the Weekly and Monthly Means, for 1844.

| Civil Day. | Jan. | Feb. | March. | April. | May. | June. | July. | Aug. | Sept. | Oct. | Nov. | Dec. |
|---|---|---|---|---|---|---|---|---|---|---|---|---|
| | in. | in. | in. | in | in. | in. | in. | in. | in. | in. | in. | in. |
| 1 | 0·111 | 0·320 | 0·200 | 0·098 | 0·070 | 0·082 | 0·042 | 0·163 | [0·074] | 0·209 | 0·134 | [0·163] |
| 2 | ·392 | ·449 | ·106 | ·407 | ·130 | [ ·107] | ·031 | ·107 | ·064 | ·382 | ·124 | ·158 |
| 3 | ·226 | ·199 | [ ·272] | ·070 | ·130 | ·063 | ·062 | ·296 | ·037 | ·255 | [ ·160] | ·262 |
| 4 | ·211 | [ ·257] | ·460 | ·077 | ·081 | ·141 | ·090 | [ ·256] | ·070 | ·187 | ·315 | ·118 |
| 5 | ·461 | ·063 | ·052 | ·228 | [ ·144] | ·254 | ·044 | ·095 | ·179 | ·182 | ·128 | ·059 |
| 6 | ·268 | ·161 | ·361 | ·260 | ·258 | ·098 | ·209 | ·653 | ·168 | [ ·297] | ·156 | ·068 |
| 7 | [ ·330] | ·349 | ·139 | [ ·202] | ·183 | ·159 | [ ·133] | ·224 | ·058 | ·220 | ·090 | ·088 |
| 8 | ·535 | ·053 | ·498 | ·169 | ·081 | ·327 | ·111 | ·210 | [ ·143] | ·501 | ·421 | [ ·120] |
| 9 | ·259 | ·555 | ·420 | ·055 | ·083 | [ ·187] | ·099 | ·165 | ·112 | ·438 | ·106 | ·138 |
| 10 | ·246 | ·308 | [ ·363] | ·421 | ·138 | ·161 | ·244 | ·113 | ·262 | ·390 | [ ·217] | ·168 |
| 11 | ·113 | [ ·216] | ·355 | ·160 | ·117 | ·099 | ·061 | [ ·172] | ·080 | ·286 | ·178 | ·199 |
| 12 | ·206 | ·098 | ·659 | ·345 | [ ·117] | ·276 | ·127 | ·139 | ·214 | ·269 | ·156 | ·160 |
| 13 | ·219 | ·072 | ·110 | ·074 | ·077 | ·166 | ·654 | ·228 | ·058 | [ ·235] | ·350 | ·226 |
| 14 | [ ·137] | ·213 | ·269 | [ ·179] | ·164 | ·184 | [ ·218] | ·180 | ·185 | ·181 | ·463 | ·069 |
| 15 | ·106 | ·296 | ·172 | ·176 | ·126 | ·271 | ·161 | ·331 | [ ·169] | ·054 | ·417 | [ ·197] |
| 16 | ·099 | ·048 | ·466 | ·149 | ·371 | [ ·182] | ·127 | ·240 | ·141 | ·230 | ·270 | ·100 |
| 17 | ·082 | ·140 | [ ·341] | ·170 | ·137 | ·242 | ·181 | ·358 | ·227 | ·345 | [ ·303] | ·100 |
| 18 | ·333 | [ ·223] | ·119 | ·252 | ·200 | ·122 | ·121 | [ ·243] | ·191 | ·256 | ·131 | ·525 |
| 19 | ·189 | ·478 | ·518 | ·059 | [ ·173] | ·108 | ·247 | ·312 | ·043 | ·395 | ·147 | ·366 |
| 20 | ·133 | ·174 | ·505 | ·061 | ·091 | ·195 | ·242 | ·143 | ·100 | [ ·255] | ·393 | ·082 |
| 21 | [ ·153] | ·203 | ·293 | [ ·214] | ·201 | ·103 | [ ·150] | ·072 | ·045 | ·433 | ·112 | ·041 |
| 22 | ·125 | ·199 | ·269 | ·105 | ·040 | ·136 | ·068 | ·089 | [ ·084] | ·065 | ·173 | [ ·109] |
| 23 | ·105 | ·738 | ·134 | ·396 | ·090 | [ ·125] | ·125 | ·131 | ·150 | ·037 | ·077 | ·036 |
| 24 | ·036 | ·706 | [ ·321] | ·409 | ·101 | ·096 | ·098 | ·142 | ·134 | ·116 | [ ·111] | ·032 |
| 25 | ·297 | [ ·403] | ·324 | ·123 | ·134 | ·104 | ·078 | [ ·097] | ·031 | ·097 | ·125 | ·097 |
| 26 | ·082 | ·546 | ·416 | ·198 | [ ·096] | ·118 | ·191 | ·077 | ·071 | ·241 | ·056 | ·166 |
| 27 | ·263 | ·119 | ·489 | ·171 | ·041 | ·047 | ·059 | ·085 | ·111 | [ ·151] | ·125 | ·043 |
| 28 | [· 266] | ·112 | ·267 | [ ·124] | ·176 | ·115 | [ ·179] | ·060 | ·193 | ·107 | ·121 | ·181 |
| 29 | ·438 | ·455 | ·061 | ·075 | ·034 | ·045 | ·043 | ·076 | [ ·231] | ·236 | ·242 | [ ·122] |
| 30 | ·195 | | ·093 | ·106 | ·055 | [ ·057] | ·540 | ·097 | ·419 | ·112 | ·075 | ·143 |
| 31 | ·323 | | [ ·166] | | ·050 | | ·164 | ·102 | | ·103 | | ·146 |
| Mean | 0·224 | 0·282 | 0·298 | 0·185 | 0·124 | 0·148 | 0·156 | 0·181 | 0·134 | 0·234 | 0·196 | 0·145 |

*Annual Variation of the Mean Diurnal Ranges of Atmospheric Pressure.*—The mean of the diurnal ranges is greatest for the month of March, being 0·298 in.; and it is least for the month of May, being 0·124 in. The annual variation of the diurnal ranges, is exactly the reverse of the annual variation of the pressures; when

the mean pressure increases, the range diminishes, and *vice versa*. The means for the meteorological quarters are as follow:—

| | | in. | | | in. |
|---|---|---|---|---|---|
| Winter,..... | Dec., Jan., Feb., | 0·217 | Summer,..... | June, July, Aug., | 0·162 |
| Spring,..... | March, April, May, | 0·202 | Autumn,..... | Sept., Oct., Nov., | 0·188 |

The mean of the ranges for the year 1844, = 0·192 in.

The range was greatest in winter, and least in summer. The three consecutive months with the greatest mean of ranges are January, February, and March, the mean being 0·268 in.; and the three with the least mean of ranges are May, June, and July, the mean being 0·143 in.

TABLE XX.—Diurnal Range of the Barometer, with reference to the Moon's Age and Declination, for 1844.

| Moon's Age. | Mean Diurnal Range. | Moon's Age. | Mean Diurnal Range. | After Moon farthest North. | Mean Diurnal Range. | After Moon farthest North. | Mean Diurnal Range. |
|---|---|---|---|---|---|---|---|
| Day. | in. | Day. | in. | Day. | in. | Day. | in. |
| 15 | 0·219 | 0 | 0·185 | 0 | 0·196 | 14 | 0·184 |
| 16 | ·147 | 1 | ·246 | 1 | ·220 | 15 | ·184 |
| 17 | ·142 | 2 | ·198 | 2 | ·266 | 16 | ·207 |
| 18 | ·182 | 3 | ·185 | 3 | ·211 | 17 | ·152 |
| 19 | ·260 | 4 | ·213 | 4 | ·155 | 18 | ·211 |
| 20 | ·190 | 5 | ·221 | 5 | ·229 | 19 | ·175 |
| 21 | ·202 | 6 | ·270 | 6 | ·206 | 20 | ·150 |
| 22 | ·221 | 7 | ·190 | 7 | ·190 | 21 | ·171 |
| 23 | ·243 | 8 | ·210 | 8 | ·210 | 22 | ·214 |
| 24 | ·176 | 9 | ·206 | 9 | ·168 | 23 | ·175 |
| 25 | ·151 | 10 | ·220 | 10 | ·196 | 24 | ·216 |
| 26 | ·166 | 11 | ·146 | 11 | ·180 | 25 | ·258 |
| 27 | ·256 | 12 | ·113 | 12 | ·158 | 26 | ·188 |
| 28 | ·194 | 13 | ·116 | 13 | ·134 | 27 | ·221 |
| 29 | ·219 | 14 | ·118 | | | | |

Table XX. has been formed from Table XIX. in the manner already described for Table II. of the magnetical results.

*Variation of the Diurnal Range of Atmospheric Pressure with the Moon's Age.*—The following are means of groups from the first portion of Table XX.:—

| | in. | | in. |
|---|---|---|---|
| 12 days till 18 days, Full Moon, ..... | 0·148 | 27 days till 3 days, New Moon, ..... | 0·212 |
| 15 ..... 22 ... | 0·195 | 0 ..... 7 ... | 0·213 |
| 19 ..... 26 ... | 0·201 | 4 ..... 11 ... | 0·209 |
| 23 ..... 29 ... | 0·201 | 8 ..... 14 ... | 0·161 |

The diurnal range of atmospheric pressure is least at full moon, and is greatest about new moon. The difference is well marked.

*Variation of the Diurnal Range of Atmospheric Pressure with reference to the Moon's Declination.*—The means of groups from the second portion of Table XX. are as follow:—

| | in. | | in. |
|---|---|---|---|
| 25 days till 3 days, Moon farthest North,... | 0·223 | 11 days till 17 days, Moon farthest South,... | 0·171 |
| 0 ..... 6 ... | 0·212 | 14 ..... 20 ... | 0·180 |
| 4 ..... 10 ... | 0·193 | 18 ..... 24 ... | 0·187 |
| 7 ..... 13 ... | 0·177 | 21 ..... 27 ... | 0·206 |

These means vary with great regularity. The diurnal range of atmospheric pressure was greatest when the moon was farthest north, and it was least when the moon was farthest south. The mean of 84 diurnal ranges about the time of the moon's greatest northerly position was 0·052 in. greater than the mean of the same number of ranges about the time of the moon's greatest southerly position.

TABLE XXI.—Hourly Means of the Height of the Barometer for each Month, and the Year 1844.

| Mak. M. T. | Jan. | Feb. | March. | April. | May. | June. | July. | Aug. | Sept. | Oct. | Nov. | Dec. | Year. |
|---|---|---|---|---|---|---|---|---|---|---|---|---|---|
| h. | in. | in. | in. | in. | in. | in. | in. | in. | in. | in. | in. | in. | in. |
| 12 | 29·695 | 29·307 | 29·511 | 29·811 | 29·988 | 29·631 | 29·641 | 29·493 | 29·828 | 29·397 | 29·553 | 29·892 | 29·6456 |
| 13 | ·691 | ·300 | ·511 | ·805 | ·982 | ·629 | ·638 | ·489 | ·825 | ·392 | ·549 | ·887 | ·6415 |
| 14 | ·690 | ·295 | ·506 | ·802 | ·981 | ·623 | ·633 | ·483 | ·819 | ·385 | ·548 | ·888 | ·6377 |
| 15 | ·690 | ·290 | ·504 | ·800 | ·978 | ·621 | ·629 | ·478 | ·814 | ·378 | ·544 | ·885 | ·6342 |
| 16 | ·686 | ·287 | ·506 | ·796 | ·981 | ·624 | ·632 | ·475 | ·811 | ·375 | ·545 | ·879 | ·6331 |
| 17 | ·684 | ·289 | ·507 | ·802 | ·987 | ·628 | ·635 | ·479 | ·812 | ·374 | ·544 | ·876 | ·6347 |
| 18 | ·684 | ·290 | ·511 | ·807 | ·991 | ·631 | ·638 | ·485 | ·820 | ·376 | ·544 | ·878 | ·6379 |
| 19 | ·687 | ·299 | ·513 | ·811 | ·995 | ·632 | ·638 | ·488 | ·825 | ·387 | ·550 | ·883 | ·6423 |
| 20 | ·695 | ·312 | ·517 | ·812 | ·997 | ·635 | ·637 | ·489 | ·827 | ·395 | ·559 | ·891 | ·6472 |
| 21 | ·701 | ·318 | ·523 | ·811 | ·996 | ·635 | ·635 | 490 | ·830 | ·400 | ·565 | ·899 | ·6502 |
| 22 | ·706 | ·325 | ·526 | ·809 | ·993 | ·634 | ·629 | ·489 | ·826 | ·401 | ·572 | ·904 | ·6512 |
| 23 | ·698 | ·334 | ·529 | ·805 | ·988 | ·629 | ·630 | ·490 | ·821 | ·401 | ·572 | ·899 | ·6497 |
| 0 | ·692 | ·336 | ·528 | ·802 | ·982 | ·630 | ·629 | ·487 | ·817 | ·397 | ·567 | ·889 | ·6463 |
| 1 | ·686 | ·336 | ·526 | ·801 | ·977 | ·627 | ·629 | ·486 | ·813 | ·396 | ·564 | ·884 | ·6437 |
| 2 | ·685 | ·333 | ·527 | ·795 | ·970 | ·625 | ·621 | ·486 | ·806 | ·397 | ·562 | ·884 | ·6409 |
| 3 | ·689 | ·333 | ·528 | ·793 | ·962 | ·624 | ·616 | ·485 | ·803 | ·394 | ·564 | ·887 | ·6398 |
| 4 | ·692 | ·334 | ·533 | ·794 | ·959 | ·621 | ·609 | ·485 | ·801 | ·399 | ·565 | ·888 | ·6400 |
| 5 | ·694 | ·337 | ·542 | ·794 | ·959 | ·617 | ·603 | ·484 | ·803 | ·404 | ·569 | ·890 | ·6413 |
| 6 | ·697 | ·340 | ·549 | ·799 | ·962 | ·620 | ·603 | ·489 | ·808 | ·412 | ·573 | ·893 | ·6454 |
| 7 | ·700 | ·344 | ·557 | ·806 | ·970 | ·622 | ·607 | ·494 | ·815 | ·414 | ·575 | ·899 | ·6502 |
| 8 | ·698 | ·343 | ·556 | ·812 | ·978 | ·625 | ·611 | ·500 | ·819 | ·418 | ·577 | ·903 | ·6533 |
| 9 | ·700 | ·340 | ·558 | ·814 | ·983 | ·627 | ·616 | ·504 | ·818 | ·416 | ·579 | ·905 | ·6550 |
| 10 | ·700 | ·337 | ·559 | ·814 | ·983 | ·625 | ·621 | ·507 | ·821 | ·412 | ·580 | ·907 | ·6555 |
| 11 | ·694 | ·336 | ·561 | ·814 | ·983 | ·626 | ·622 | ·507 | ·819 | ·406 | ·582 | ·907 | ·6547 |

*Diurnal Variation of Atmospheric Pressure.*—The means for each month indicate two maxima and two minima; the epochs, however, vary considerably; this is chiefly due to rapid variations of mean pressure, and especially to those which occur between Saturday night and Monday morning; these render the mean at $11^h$ (the hour of the last observation on Saturday) considerably different from that at $12^h$ (the hour of the first observation on Monday morning). Assuming that the change in the means from $11^h$ to $12^h$ is the same as from $10^h$ to $11^h$, the differences between the means for $12^h$ so obtained, and the means for $12^h$ at the commencement of each series, will be due to the causes noticed above, and they may be considered as differences which have gradually increased from the first to the following $12^h$. By correcting the observations for such gradual changes, the epochs of maxima and minima will be determined with more accuracy. Table XXII. has been formed in this way. The hourly means of the astronomical quarters having been obtained, the change from the preceding to the following $12^h$ was found—

| | in. | | in. | | in. | | in. |
|---|---|---|---|---|---|---|---|
| For Winter, | = +0·0131. | Correction, | = −0·00055 an hour. | For Summer, | = −0·0090. | Correction, | = +0·00037 an hour. |
| For Spring, | = +0·0270. | ..... | = −0·00112 ..... | For Autumn, | = 0·0000. | | |

For the means for the year, = +0·0083 in. Correction, = −0·00035 in. an hour.

The number of the hour after $12^h$ being $n$, the hourly means for the quarters were corrected by the quantities $n \times c$, where $c$ is the correction given above for the respective quarters; the numbers for each quarter and the year, in excess of the lowest mean thus corrected, are given in Table XXII.

TABLE XXII.—Hourly Variations of the Height of the Barometer for each Astronomical Quarter, and for the year 1844.

| Mak. M. T. | Nov. Dec. Jan. | Feb. March April. | May June July. | Aug. Sept. Oct. | Year 1844. | Mak. M. T. | Nov. Dec. Jan. | Feb. March April. | May June July. | Aug. Sept. Oct. | Year 1844. |
|---|---|---|---|---|---|---|---|---|---|---|---|
| h. | in. | in. | in. | in. | in. | h. | in. | in. | in. | in. | in. |
| 12 | 0·0147 | 0·0178 | 0·0207 | 0·0190 | 0·0139 | 0 | 0·0108 | 0·0166 | 0·0188 | 0·0133 | 0·0104 |
| 13 | ·0099 | ·0124 | ·0175 | ·0150 | ·0094 | 1 | ·0056 | ·0145 | ·0165 | ·0113 | ·0074 |
| 14 | ·0090 | ·0068 | ·0138 | ·0086 | ·0053 | 2 | ·0040 | ·0108 | ·0113 | ·0093 | ·0043 |
| 15 | ·0061 | ·0027 | ·0112 | ·0030 | ·0014 | 3 | ·0065 | ·0093 | ·0069 | ·0070 | ·0028 |
| 16 | ·0025 | ·0000 | ·0146 | ·0000 | ·0000 | 4 | ·0076 | ·0106 | ·0030 | ·0080 | ·0027 |
| 17 | ·0000 | ·0019 | ·0192 | ·0013 | ·0012 | 5 | ·0098 | ·0134 | ·0000 | ·0100 | ·0036 |
| 18 | ·0001 | ·0041 | ·0229 | ·0066 | ·0041 | 6 | ·0125 | ·0173 | ·0024 | ·0160 | ·0074 |
| 19 | ·0043 | ·0079 | ·0250 | ·0130 | ·0081 | 7 | ·0157 | ·0225 | ·0074 | ·0206 | ·0118 |
| 20 | ·0120 | ·0128 | ·0267 | ·0166 | ·0127 | 8 | ·0164 | ·0227 | ·0128 | ·0253 | ·0146 |
| 21 | ·0182 | ·0154 | ·0260 | ·0196 | ·0153 | 9 | ·0179 | ·0220 | ·0172 | ·0256 | ·0159 |
| 22 | ·0232 | ·0169 | ·0231 | ·0183 | ·0160 | 10 | ·0183 | ·0201 | ·0185 | ·0263 | ·0160 |
| 23 | ·0184 | ·0185 | ·0205 | ·0170 | ·0141 | 11 | ·0165 | ·0193 | ·0196 | ·0236 | ·0149 |

The epochs of maxima and minima, distinguishing the principal by + and −, for the astronomical quarters, and for the year, are as follow:—

| | | Min. | Max. | Min. | Max. |
|---|---|---|---|---|---|
| Winter. | Nov., Dec., Jan.,..... | $-5^h\ 40^m$ A.M. | $+10^h\ 10^m$ A.M. | $2^h\ 0^m$ P.M. | $9^h\ 50^m$ P.M. |
| Spring. | Feb., March, April,... | −4 10 A.M. | 11 10 A.M. | 3 10 P.M. | + 7 40 P.M. |
| Summer. | May, June, July,..... | 3 10 A.M. | + 8 20 A.M. | −5 20 P.M. | 12 0 P.M. |
| Autumn. | Aug., Sept., Oct., ... | −4 20 A.M. | 9 30 A.M. | 3 30 P.M. | +10 0 P.M. |
| Year | | −4 10 A.M. | +10 0 A.M. | 3 40 P.M. | + 9 40 P.M. |

The morning minimum occurs earliest in summer, and latest in winter.
The morning maximum occurs earliest in summer, and latest in spring and winter.
The afternoon minimum occurs latest in summer, and earliest in winter.
The evening maximum occurs latest in summer, and earliest in spring.
The differences in the epochs appear to be related to the varying times of sunrise and sunset.
The true times of mean pressure for the year from Table XXI. are, $12^h\ 0^m$, $7^h\ 40^m$ A.M., $0^h\ 40^m$ P.M., $6^h\ 10^m$ P.M.
The times from Table XXII. are, ..... $1^h\ 17^m$ A.M., $7^h\ 20^m$ A.M., $0^h\ 40^m$ P.M., $6^h\ 30^m$ P.M.
The intervals between the times of mean pressure for the last case are, $6^h\ 3^m$, $5^h\ 20^m$, $5^h\ 50^m$.

*Range of the Mean Diurnal Variation.*—The ranges of the mean diurnal variation from Table XXI. are

| Jan. | Feb. | March. | April. | May. | June. | July. | Aug. | Sept. | Oct. | Nov. | Dec. |
|---|---|---|---|---|---|---|---|---|---|---|---|
| in. | in. | in. | in. | in. | in. | in. | in. | in. | in. | in. | in. |
| 0·022 | 0·057 | 0·057 | 0·021 | 0·038 | 0·018 | 0·038 | 0·032 | 0·029 | 0·044 | 0·038 | 0·031 |

The range of the mean variations was greatest in February, March, and October, and least in June and January. The ranges of the means for the astronomical quarters, and the year, were

| | | | | |
|---|---|---|---|---|
| in. | in. | in. | in. | in. |
| Winter, 0·028. | Spring, 0·041. | Summer, 0·030. | Autumn, 0·026. | The Year, 0·022. |

These ranges, however, are affected by the changes of mean pressure from day to day; the following ranges of the mean variations from Table XXII. are probably much nearer the truth:—

| | | | | |
|---|---|---|---|---|
| in. | in. | in. | in. | in. |
| Winter, 0·023. | Spring, 0·023. | Summer, 0·027. | Autumn, 0·026. | The Year, 0·016. |

TABLE XXIII.—Extreme Readings of the Barometer for each Month; Extreme Mean Daily Heights for each Month; and Extreme Diurnal Ranges for each Month, together with the Ranges and Means of the Extremes.

| Month. | Extreme Readings. | | | | | | | | Extreme Daily Means. | | | | | | Extreme Diurnal Ranges. | | | |
|---|---|---|---|---|---|---|---|---|---|---|---|---|---|---|---|---|---|---|
| | Highest. | | | Lowest. | | | Range. | Mean. | Highest. | | Lowest. | | Range. | Mean. | Greatest. | | Least. | |
| | d. | h. | in. | d. | h. | in. | in. | in. | d. | in. | d. | in. | in. | in. | d. | in. | d. | in. |
| Jan. | 14 | 13 | 30·234 | 5 | 19, 20 | 28·754 | 1·480 | 29·494 | 15 | 30·168 | 6 | 28·851 | 1·317 | 29·509 | 8 | 0·535 | 24 | 0·036 |
| Feb. | 3 | 0 | 29·869 | 25 | 18 | 28·559 | 1·310 | 29·214 | 3 | 29·804 | 8 | 28·761 | 1·043 | 29·282 | 23 | 0·738 | 16 | 0·048 |
| March | 28 | 23 | 30·267 | 0 | 15 | 28·716 | 1·551 | 29·491 | 29 | 30·243 | 2 | 28·818 | 1·425 | 29·530 | 12 | 0·659 | 5 | 0·052 |
| April | 30 | 12 | 30·195 | 12 | 11 | 29·298 | 0·897 | 29·746 | 9 | 30·170 | 13 | 29·357 | 0·813 | 29·763 | 10 | 0·421 | 9 | 0·055 |
| May | 1 | 20, 21 | 30·281 | 6 | 15 | 29·569 | 0·712 | 29·925 | 2 | 30·226 | 7 | 29·647 | 0·579 | 29·936 | 16 | 0·371 | 29 | 0·034 |
| June | 16 | 13 | 29·950 | 7 | 9, 10 | 29·263 | 0·687 | 29·606 | 1 | 29·886 | 7 | 29·352 | 0·534 | 29·619 | 8 | 0·327 | 29 | 0·045 |
| July | 20 | 12 | 29·982 | 13 | 12 | 28·959 | 1·023 | 29·470 | 27 | 29·948 | 31 | 29·275 | 0·673 | 29·611 | 13 | 0·654 | 2 | 0·031 |
| Aug. | 31 | 12 | 30·089 | 6 | 9 | 28·811 | 1·278 | 29·450 | 31 | 30·046 | 7 | 28·992 | 1·054 | 29·519 | 6 | 0·653 | 28 | 0·060 |
| Sept. | 1 | 16 | 30·125 | 15 | 15 | 29·373 | 0·752 | 29·749 | 2 | 30·098 | 16 | 29·437 | 0·661 | 29·767 | 30 | 0·419 | 25 | 0·031 |
| Oct. | 27 | 13 | 30·127 | 14 | 18, 19 | 28·596 | 1·531 | 29·361 | 28 | 30·070 | 15 | 28·619 | 1·451 | 29·344 | 8 | 0·501 | 23 | 0·037 |
| Nov. | 21 | 0 | 30 112 | 9 | 2 | 28·697 | 1·415 | 29·404 | 21 | 30·079 | 9 | 28·739 | 1·340 | 29·409 | 14 | 0·463 | 26 | 0·056 |
| Dec. | 21 | 8 | 30·333 | 17 | 2 | 29·230 | 1·103 | 29·781 | 21 | 30·314 | 17 | 29·261 | 1·053 | 29·787 | 18 | 0·525 | 24 | 0·032 |

*Extremes of Atmospheric Pressure for* 1844.

The highest barometer occurred..... Dec. 21d 8h = 30·333 in.
The lowest ..... ..... Feb. 25d 18h = 28·559 } Range = 6·774 in. Mean = 29·446 in.
The highest daily mean pressure occurred..... Dec. 21d = 30·314
The lowest ..... ..... Oct. 15d = 28·619 } Range = 1·695. Mean = 29·466.
The highest monthly mean pressure occurred in May = 29·980
The lowest..... Feb. = 29·321 } Range = 0·659. Mean = 29·650.
The greatest range of pressure in a civil day occurred February 23d = 0·738.
The least ..... July 2d and September 25d = 0·031.

## PRESSURE OF DRY AIR.

*Annual Variation of the Pressure of Dry Air.*—If we assume that the means at the foot of Table X. accurately represent the pressures of the vapour of water in the atmosphere, the mean pressures of the dry air will be obtained by subtracting them from the means for the total atmospheric pressure, Table XVIII. The resulting mean pressures of dry air are as follow:—

| in. | Jan. | Feb. | March. | April. | May. | June. | July. | Aug. | Sept. | Oct. | Nov. | Dec. |
|---|---|---|---|---|---|---|---|---|---|---|---|---|
| 29 | ·477 | ·141 | ·320 | ·547 | ·707 | ·273 | ·258 | ·134 | .466 | ·121 | .305 | ·705 |

The least mean pressures of dry air are those for October, August, and February, and the greatest are those for May and December. The means vary in the same manner as those for the total atmospheric pressure.

*Diurnal Variation of the Pressure of Dry Air.*—The following Table contains the diurnal variations of the pressure of dry air, obtained from a comparison of Tables XIII. and XXII.

The variation of the pressure of the dry air thus determined is double in winter, like that of the total pressure; there is a secondary maximum and minimum in autumn, and the variation is single, with some irregularities, in the other quarters, and for the year. The epochs of maxima and minima are as follow:—

| | | Max. | Min. | Max. | Min. |
|---|---|---|---|---|---|
| Winter. | Nov., Dec., Jan.,..... | + 9h 40m P.M. | 6h 50m A.M. | 10h 0m A.M. | − 1h 40m P.M. |
| Spring. | Feb., March, April,... | 9h 10m P.M. | | | 2h 10m P.M. |
| Summer. | May, June, July,..... | | | 4h 10m A.M. | 5h 10m P.M. |
| Autumn. | Aug., Sept., Oct., ... | + 11h 10m P.M. | 3h 40m A.M. | 5h 40m A.M. | − 3h 10m P.M. |
| The year 1844,..... | | 12h 10m A.M. | | | 2h 40m P.M. |

The law of variation is so different in the different quarters of the year, that no confidence should be placed in these results, as exhibiting the diurnal variation of the pressure of dry air: it appears extremely probable that the true pressure of aqueous vapour in the atmosphere is not to be determined by means of the psychrometer.

TABLE XXIV.—Hourly Variations of the Pressure of Dry Air for each Astronomical Quarter, and for the year 1844.

| Mak. M. T. | Nov. Dec. Jan. | Feb. March April. | May June July. | Aug. Sept. Oct. | Year 1844. | Mak. M. T. | Nov. Dec. Jan. | Feb. March April. | May June July. | Aug. Sept. Oct. | Year 1844. |
|---|---|---|---|---|---|---|---|---|---|---|---|
| h. | in. | in. | in. | in. | in. | h. | in. | in. | in. | in. | in. |
| 12 | 0·026 | 0·029 | 0·052 | 0·045 | 0·036 | 0 | 0·008 | 0·004 | 0·015 | 0·010 | 0·006 |
| 13 | ·022 | ·023 | ·052 | ·044 | ·033 | 1 | ·000 | ·003 | ·014 | ·008 | ·003 |
| 14 | ·020 | ·020 | ·052 | ·043 | ·031 | 2 | ·000 | ·000 | ·007 | ·004 | ·000 |
| 15 | ·017 | ·018 | ·051 | ·039 | ·029 | 3 | ·005 | ·002 | ·004 | ·000 | ·000 |
| 16 | ·013 | ·016 | ·057 | ·039 | ·029 | 4 | ·012 | ·006 | ·005 | ·005 | ·004 |
| 17 | ·011 | ·016 | ·054 | ·042 | ·029 | 5 | ·008 | ·009 | ·000 | ·010 | ·007 |
| 18 | ·010 | ·018 | ·047 | ·042 | ·027 | 6 | ·021 | ·019 | ·007 | ·017 | ·013 |
| 19 | ·014 | ·014 | ·042 | ·035 | ·024 | 7 | ·026 | ·025 | ·015 | ·024 | ·020 |
| 20 | ·020 | ·013 | ·039 | ·026 | ·022 | 8 | ·027 | ·028 | ·024 | ·032 | ·025 |
| 21 | ·023 | ·010 | ·037 | ·021 | ·020 | 9 | ·029 | ·030 | ·034 | ·041 | ·030 |
| 22 | ·025 | ·007 | ·028 | ·013 | ·016 | 10 | ·029 | ·028 | ·039 | ·046 | ·033 |
| 23 | ·016 | ·006 | ·021 | ·010 | ·011 | 11 | ·027 | ·026 | ·040 | ·050 | ·034 |

## PRESSURE OF THE WIND.

TABLE XXV.—Daily, Weekly, and Monthly Means of the Pressure of Wind, in Pounds on the Square Foot of Surface, deduced from the greatest pressures occurring *between* the Hourly Observations, in 1844.

| Civil Day. | Jan. | Feb. | March. | April. | May. | June. | July. | Aug. | Sept. | Oct. | Nov. | Dec. |
|---|---|---|---|---|---|---|---|---|---|---|---|---|
| | lb. | lb. | lb. | lb. | lb. | lb. | lb. | lb. | lb. | lb. | lb. | lb. |
| 1 | 0·05 | 0·10 | 1·22 | 0·37 | 0·10 | 0·08 | 0·21 | 0·66 | [0·27] | 1·48 | 2·44 | [0·32] |
| 2 | 0·15 | 0·07 | 1·56 | 1·58 | 0·00 | [0·31] | 0·04 | 0·50 | 0·15 | 3·41 | 3·35 | 0·02 |
| 3 | 0·86 | 0·13 | [0·81] | 0·27 | 0·15 | 0·02 | 0·09 | 0·57 | 0·37 | 2·66 | [1·97] | 0·03 |
| 4 | 0·02 | [0·17] | 1·14 | 0·00 | 0·20 | 0·79 | 0·14 | [0·98] | 0·61 | 0·84 | 1·22 | 0·20 |
| 5 | 0·35 | 0·00 | 0·20 | 0·15 | [0·12] | 0·65 | 0·01 | 0·12 | 0·67 | 0·20 | 1·17 | 0·13 |
| 6 | 0·00 | 0·00 | 0·64 | 0·11 | 0·32 | 0·49 | 0·10 | 1·96 | 0·27 | [1·28] | 2·10 | 0·05 |
| 7 | [0·23] | 0·73 | 0·05 | [0·30] | 0·01 | 1·04 | [0·23] | 2·09 | 0·21 | 0·38 | 0·13 | 0·78 |
| 8 | 0·00 | 1·42 | 0·89 | 0·64 | 0·07 | 1·16 | 0·22 | 1·54 | [0·38] | 0·79 | 0·50 | [0·19] |
| 9 | 1·04 | 1·43 | 3·42 | 0·40 | 0·07 | [0·94] | 0·15 | 1·08 | 0·37 | 2·84 | 0·23 | 0·12 |
| 10 | 0·00 | 1·05 | [1·32] | 0·51 | 0·59 | 1·11 | 0·76 | 0·15 | 0·31 | 1·42 | [0·40] | 0·07 |
| 11 | 0·00 | [0·79] | 1·80 | 1·00 | 0·26 | 0·79 | 1·35 | [0·57] | 0·47 | 0·62 | 0·79 | 0·01 |
| 12 | 0·07 | 0·05 | 1·43 | 0·62 | [0·22] | 1·04 | 0·34 | 0·40 | 0·68 | 0·34 | 0·52 | 0·26 |
| 13 | 0·10 | 0·30 | 0·31 | 0·50 | 0·19 | 3·05 | 0·18 | 0·06 | 0·10 | [0·65] | 0·25 | 0·57 |
| 14 | [0·03] | 0·47 | 0·18 | [0·74] | 0·18 | 3·32 | [0·43] | 0·19 | 0·63 | 0·54 | 0·29 | 0·87 |
| 15 | 0·00 | 0·65 | 0·82 | 1·02 | 0·01 | 1·94 | 0·28 | 0·60 | [0·50] | 0·42 | 2·01 | [0·36] |
| 16 | 0·00 | 1·62 | 2·25 | 0·76 | 0·02 | [1·41] | 0·26 | 0·25 | 0·89 | 0·56 | 1·24 | 0·30 |
| 17 | 0·00 | 0·24 | [0·78] | 0·52 | 1·94 | 0·06 | 0·15 | 0·67 | 0·34 | 1·47 | [1·21] | 0·09 |
| 18 | 1·38 | [0·78] | 0·04 | 0·60 | 0·69 | 0·02 | 0·15 | [0·66] | 0·37 | 0·47 | 2·14 | 0·09 |
| 19 | 1·67 | 1·44 | 0·32 | 0·69 | [0·91] | 0·09 | 0·18 | 0·55 | 0·29 | 0·49 | 0·74 | 0·04 |
| 20 | 0·17 | 0·64 | 1·09 | 0·61 | 1·12 | 0·24 | 0·18 | 1·41 | 0·53 | [0·45] | 0·82 | 0·02 |
| 21 | [0·56] | 0·08 | 0·42 | [1·03] | 1·62 | 0·53 | [0·20] | 0·47 | 0·08 | 0·11 | 0·17 | 0·01 |
| 22 | 0·05 | 0·06 | 0·35 | 0·32 | 0·06 | 0·84 | 0·50 | 0·05 | [0·24] | 0·09 | 0·15 | [0·03] |
| 23 | 0·00 | 0·29 | 0·20 | 1·74 | 0·08 | [0·55] | 0·12 | 0·17 | 0·15 | 0·10 | 0·37 | 0·03 |
| 24 | 0·10 | 0·63 | [0·43] | 2·23 | 0·11 | 0·26 | 0·08 | 0·11 | 0·09 | 0·02 | [0·52] | 0·03 |
| 25 | 1·01 | [0·67] | 0·71 | 0·52 | 0·41 | 0·96 | 0·21 | [0·19] | 0·29 | 0·22 | 0·07 | 0·08 |
| 26 | 0·59 | 2·35 | 0·38 | 0·85 | [0·23] | 0·45 | 0·11 | 0·52 | 0·91 | 0·40 | 0·31 | 0·28 |
| 27 | 0·42 | 0·48 | 0·51 | 0·92 | 0·60 | 0·20 | 0·08 | 0·23 | 0·96 | [0·29] | 2·07 | 0·02 |
| 28 | [1·36] | 0·19 | 0·52 | [0·42] | 0·02 | 0·23 | [0·26] | 0·09 | 0·82 | 0·21 | 1·16 | 0·02 |
| 29 | 2·32 | 0·08 | 0·20 | 0·08 | 0·19 | 0·19 | 0·71 | 0·17 | [1·51] | 0·24 | 0·45 | [0·07] |
| 30 | 2·45 | | 0·00 | 0·05 | 0·24 | [0·16] | 0·20 | 0·11 | 1·46 | 0·64 | 0·05 | 0·03 |
| 31 | 1·40 | | [0·49] | | 0·10 | | 0·28 | 0·20 | | 1·57 | | 0·04 |
| Mean | 0·53 | 0·58 | 0·79 | 0·66 | 0·35 | 0·78 | 0·26 | 0·55 | 0·48 | 0·83 | 0·95 | 0·16 |

Table XXV. contains the means of the maximum pressures of wind recorded by the anemometer *between* the hours of observation: Table XXVI., which follows, contains the means of the maximum pressures recorded within about $10^m$ *at* the hour of observation. The latter, therefore, will represent more nearly the *mean* pressure of the wind; they would require, however, to be multiplied by a constant coefficient to obtain the true mean; this coefficient has not been yet ascertained.

*Annual Variation of the* maximum *Pressures of Wind.*—From Table XXV. the mean of the maximum pressures between the hours of observation was greatest in November and least in July. The following are the means for the meteorological quarters:—

| | | lb. | | | lb. |
|---|---|---|---|---|---|
| Winter, | Dec., Jan., Feb., | 0·42 | Summer, | June, July, Aug., | 0·53 |
| Spring, | March, April, May, | 0·60 | Autumn, | Sept., Oct., Nov., | 0·75 |

The year 1844,.....0·58 lb.

The pressure is greatest in autumn, is least in winter, and is less in summer than in spring. The mean for July, August, and September is as small as that for winter.

TABLE XXVI.—Daily, Weekly, and Monthly Means of the Pressure of Wind, in Pounds on the Square Foot of Surface, deduced from the greatest pressures observed within $10^m$ *at* the hours of observation, in 1844.

| Civil. Day. | Jan. | Feb. | March. | April. | May. | June. | July. | Aug. | Sept. | Oct. | Nov. | Dec. |
|---|---|---|---|---|---|---|---|---|---|---|---|---|
| | lb. | lb. | lb. | lb. | lb. | lb. | lb. | lb. | lb. | lb. | lb. | lb. |
| 1 | 0·00 | 0·04 | 0·65 | 0·18 | 0·05 | 0·04 | 0·14 | 0·47 | [0·16] | 1·00 | 1·94 | [0·22] |
| 2 | 0.07 | 0·05 | 1·03 | 1·11 | 0·00 | [0·20] | 0·02 | 0·30 | 0·08 | 2·65 | 2·39 | 0·01 |
| 3 | 0·55 | 0·10 | [0·48] | 0·15 | 0·10 | 0·00 | 0·06 | 0·38 | 0·23 | 1·78 | [1·39] | 0·01 |
| 4 | 0·00 | [0·10] | 0·67 | 0·00 | 0·08 | 0·57 | 0·09 | [0·69] | 0·41 | 0·54 | 0·88 | 0·16 |
| 5 | 0·21 | 0·00 | 0·12 | 0·07 | [0·06] | 0·39 | 0·01 | 0·05 | 0·52 | 0·13 | 0·76 | 0·06 |
| 6 | 0·00 | 0·00 | 0·39 | 0·07 | 0·14 | 0·29 | 0·05 | 1·45 | 0·22 | [0·87] | 1·30 | 0·03 |
| 7 | [0·13] | 0·42 | 0·02 | [0·17] | 0·00 | 0·55 | [0·14] | 1·49 | 0·16 | 0·16 | 0·08 | 0·51 |
| 8 | 0·00 | 1·11 | 0·48 | 0·37 | 0·02 | 0·84 | 0·13 | 1·07 | [0·28] | 0·48 | 0·32 | [0·11] |
| 9 | 0·59 | 0·92 | 2·70 | 0·22 | 0·03 | [0·58] | 0·09 | 0·70 | 0·23 | 2·11 | 0·10 | 0·04 |
| 10 | 0·00 | 0·78 | [0·97] | 0·30 | 0·39 | 0·67 | 0·46 | 0·07 | 0·22 | 1·04 | [0·26] | 0·02 |
| 11 | 0·00 | [0·54] | 1·30 | 0·64 | 0·11 | 0·50 | 0·84 | [0·38] | 0·32 | 0·39 | 0·57 | 0·00 |
| 12 | 0·01 | 0·00 | 1·15 | 0·35 | [0·11] | 0·65 | 0·27 | 0·27 | 0·49 | 0·28 | 0·32 | 0·11 |
| 13 | 0·08 | 0·16 | 0·19 | 0·27 | 0·08 | 1·91 | 0·09 | 0·03 | 0·06 | [0·44] | 0·20 | 0·34 |
| 14 | [0·02] | 0·25 | 0·09 | [0·47] | 0·04 | 2·45 | [0·26] | 0·15 | 0·45 | 0·27 | 0·12 | 0·61 |
| 15 | 0·00 | 0·38 | 0·60 | 0·65 | 0·00 | 1·27 | 0·09 | 0·46 | [0·35] | 0·28 | 1·24 | [0·22] |
| 16 | 0·00 | 1·11 | 1·56 | 0·60 | 0·02 | [0·95] | 0·17 | 0·19 | 0·58 | 0·36 | 0·80 | 0·18 |
| 17 | 0·00 | 0·15 | [0·50] | 0·32 | 1·14 | 0.00 | 0·08 | 0·43 | 0·25 | 1·09 | [0·78] | 0·05 |
| 18 | 0·93 | [0·49] | 0·00 | 0·36 | 0·31 | 0·00 | 0·07 | [0·45] | 0·25 | 0·29 | 1·51 | 0·03 |
| 19 | 1·18 | 0·89 | 0·17 | 0·39 | [0·55] | 0·07 | 0·12 | 0·35 | 0·16 | 0·20 | 0·52 | 0·00 |
| 20 | 0·08 | 0·40 | 0·60 | 0·37 | 0·57 | 0·11 | 0·11 | 0·88 | 0·31 | [0·28] | 0·47 | 0·00 |
| 21 | [0·38] | 0·04 | 0·27 | [0·63] | 1·19 | 0·31 | [0·11] | 0·37 | 0·06 | 0·01 | 0·08 | 0·01 |
| 22 | 0·00 | 0·05 | 0·16 | 0·22 | 0·05 | 0·60 | 0·24 | 0·02 | [0·14] | 0·05 | 0·05 | [0·01] |
| 23 | 0·00 | 0·14 | 0·14 | 1·06 | 0·05 | [0·34] | 0·13 | 0·10 | 0·10 | 0·05 | 0·18 | 0·02 |
| 24 | 0·09 | 0·44 | [0·24] | 1·40 | 0·07 | 0·13 | 0·02 | 0·05 | 0·05 | 0·01 | [0·31] | 0·02 |
| 25 | 0·70 | [0·42] | 0·49 | 0·29 | 0·28 | 0·58 | 0·13 | [0·11] | 0·17 | 0·12 | 0·03 | 0·04 |
| 26 | 0·32 | 1·51 | 0·17 | 0·55 | [0·13] | 0·33 | 0·07 | 0·27 | 0·75 | 0·26 | 0·22 | 0·14 |
| 27 | 0·22 | 0·32 | 0·23 | 0·64 | 0·25 | 0·08 | 0·04 | 0·18 | 0·75 | [0·18] | 1·29 | 0·00 |
| 28 | [0·92] | 0·07 | 0·22 | [0·26] | 0·02 | 0·12 | [0·15] | 0·05 | 0·54 | 0·11 | 0·82 | 0·00 |
| 29 | 1·81 | 0·04 | 0·08 | 0·03 | 0·11 | 0·10 | 0·39 | 0.10 | [1·12] | 0·15 | 0·28 | [0·02] |
| 30 | 1·60 | | 0·00 | 0·03 | 0·15 | [0·09] | 0·11 | 0·07 | 1·03 | 0·44 | 0·02 | 0·00 |
| 31 | 0·87 | | [0·29] | | 0·05 | | 0·17 | 0·10 | | 1·06 | | 0·01 |
| Mean | 0·34 | 0·37 | 0·52 | 0·41 | 0·20 | 0·50 | 0·16 | 0·37 | 0·34 | 0·57 | 0·63 | 0·09 |

*Annual Variation of the* mean *Pressures of Wind.*—It will be seen that the means at the foot of Table XXVI. vary in the same way as the means at the foot of Table XXV. The means for each of the meteorological quarters and for the year are as follow :—

| | | lb. | | | lb. |
|---|---|---|---|---|---|
| Winter, | Dec., Jan., Feb., | 0·27 | Summer, | June, July, Aug., | 0·34 |
| Spring, | March, April, May, | 0·38 | Autumn, | Sept., Oct., Nov., | 0·51 |

The mean pressure for the year 1844,.....0·37 lb.

The mean pressure of the wind is greatest in autumn and is least in winter, as before.

The monthly means of the maximum pressures (foot of Table XXV.) bear to the monthly means of the approximate mean pressures (foot of Table XXVI.) the following ratios :—

| Jan. | Feb. | March. | April. | May. | June. | July. | Aug. | Sept. | Oct. | Nov. | Dec. |
|---|---|---|---|---|---|---|---|---|---|---|---|
| 1·56 | 1·57 | 1·52 | 1·61 | 1·67 | 1·56 | 1·63 | 1·49 | 1·41 | 1·46 | 1·51 | 1·78 |

TABLE XXVII.—Mean Pressure of Wind with reference to the Moon's Age and Declination in 1844.

| Moon's Age. | Pressure of Wind. | Moon's Age. | Pressure of Wind. | After Moon farthest North. | Pressure of Wind. | After Moon farthest North. | Pressure of Wind. |
|---|---|---|---|---|---|---|---|
| Day. | lb. | Day. | lb. | Day. | lb. | Day. | lb. |
| 15 | 0·28 | 0 | 0·46 | 0 | 0·79 | 14 | 0·23 |
| 16 | 0·17 | 1 | 0·28 | 1 | 0·57 | 15 | 0·26 |
| 17 | 0·30 | 2 | 0·32 | 2 | 0·53 | 16 | 0·36 |
| 18 | 0·28 | 3 | 0·23 | 3 | 0·45 | 17 | 0·38 |
| 19 | 0·31 | 4 | 0·34 | 4 | 0·34 | 18 | 0·38 |
| 20 | 0·80 | 5 | 0·32 | 5 | 0·23 | 19 | 0·33 |
| 21 | 0·61 | 6 | 0·54 | 6 | 0·38 | 20 | 0·29 |
| 22 | 0·68 | 7 | 0·42 | 7 | 0·42 | 21 | 0·29 |
| 23 | 0·52 | 8 | 0·40 | 8 | 0·34 | 22 | 0·32 |
| 24 | 0·44 | 9 | 0·31 | 9 | 0·25 | 23 | 0·25 |
| 25 | 0·34 | 10 | 0·34 | 10 | 0·27 | 24 | 0·25 |
| 26 | 0·35 | 11 | 0·21 | 11 | 0·53 | 25 | 0·58 |
| 27 | 0·65 | 12 | 0·19 | 12 | 0·26 | 26 | 0·79 |
| 28 | 0·59 | 13 | 0·19 | 13 | 0·21 | 27 | 0·80 |
| 29 | 0·39 | 14 | 0·21 | | | | |

Table XXVII. has been formed from Table XXVI. in the manner already described for Table II. of the magnetical results.

*Pressure of Wind with reference to the Moon's Age.*—The means of groups for the first portion of Table XXVII. are as follow.

| | lb. | | lb. |
|---|---|---|---|
| 12 days to 18 days, Full Moon, | 0·23 | 27 days to 3 days, New Moon, | 0·42 |
| 15 ..... 22 ... | 0·43 | 0 ..... 7 ... | 0·36 |
| 19 ..... 26 ... | 0·51 | 4 ..... 11 ... | 0·36 |
| 23 ..... 29 ... | 0·47 | 8 ..... 14 ... | 0·26 |

The pressure of the wind in 1844 was a minimum at full moon, and it was a maximum about 5 days before new moon.

*Pressure of Wind with reference to the Moon's Declination.*—The following are the means of groups for the second part of Table XXVII.

| | lb. | | lb. |
|---|---|---|---|
| 25 days to 3 days, Moon farthest North, | 0·64 | 11 days to 17 days, Moon farthest South, | 0·32 |
| 0 ..... 6 ... | 0·47 | 14 ..... 20 ... | 0·32 |
| 4 ..... 10 ... | 0·32 | 18 ..... 24 ... | 0·30 |
| 7 ..... 13 ... | 0·33 | 21 ..... 27 ... | 0·47 |

The result for the year 1844 is very marked. The pressure of the wind is a maximum when the moon is farthest north, and it is constant for each of the groups from four days *after* the moon was farthest north till four days *before* it was farthest north; the pressure of the most northerly group is twice as great as that for the southerly groups.

TABLE XXVIII.—Maximum Pressure of Wind in each Civil Day in 1844, with the Monthly Means.

| Civil Day. | Jan. | Feb. | March. | April. | May. | June. | July. | Aug. | Sept. | Oct. | Nov. | Dec. |
|---|---|---|---|---|---|---|---|---|---|---|---|---|
| | lb. | lb. | lb. | lb. | lb. | lb. | lb. | lb. | lb. | lb. | lb. | lb. |
| 1 | 0·6 | 0·5 | 3·8 | 2·1 | 0·4 | 0·4 | 0·7 | 1·7 | 1·0 | 3·3 | 3·7 | 0·2 |
| 2 | 0·5 | 0·6 | 4·0 | 4·3 | 0·0 | 0·1 | 0·2 | 1·1 | 0·4 | 6·8 | 4·8 | 0·1 |
| 3 | 3·0 | 0·4 | 4·8 | 0·8 | 1·0 | 0·3 | 0·5 | 1·6 | 1·2 | 7·0 | 3·1 | 0·2 |
| 4 | 0·2 | 0·0 | 3·5 | 0·0 | 0·6 | 2·7 | 0·3 | 0·6 | 1·5 | 2·3 | 1·8 | 0·8 |
| 5 | 1·8 | 0·0 | 0·6 | 1·5 | 0·9 | 2·5 | 0·1 | 0·4 | 1·9 | 0·5 | 2·3 | 0·7 |
| 6 | 0·1 | 0·0 | 2·5 | 0·5 | 1·2 | 1·1 | 0·5 | 3·8 | 0·5 | 3·4 | 4·5 | 0·2 |
| 7 | 0·0 | 2·6 | 0·2 | 0·2 | 0·1 | 2·4 | 0·8 | 4·4 | 0·9 | 0·6 | 0·7 | 3·5 |
| 8 | 0·0 | 3·5 | 3·1 | 2·0 | 0·6 | 2·5 | 0·8 | 3·0 | 0·8 | 2·8 | 1·4 | 0·2 |
| 9 | 2·3 | 4·2 | 9·3 | 1·3 | 0·4 | 2·5 | 0·7 | 2·6 | 0·9 | 5·5 | 1·0 | 0·7 |
| 10 | 0·0 | 2·1 | 3·8 | 1·8 | 1·7 | 2·4 | 1·8 | 0·4 | 0·7 | 3·0 | 0·1 | 0·1 |
| 11 | 0·1 | 1·9 | 5·5 | 3·0 | 1·1 | 2·2 | 2·6 | 1·0 | 1·0 | 1·7 | 3·3 | 0·1 |
| 12 | 1·0 | 0·0 | 3·8 | 2·5 | 0·8 | 2·3 | 1·2 | 0·9 | 1·9 | 1·3 | 2·6 | 2·7 |
| 13 | 0·8 | 1·3 | 1·7 | 1·9 | 1·1 | 5·5 | 0·5 | 0·2 | 0·3 | 1·9 | 1·0 | 1·3 |
| 14 | 1·9 | 2·0 | 1·0 | 1·2 | 0·9 | 6·4 | 2·9 | 0·8 | 1·7 | 1·4 | 1·7 | 1·6 |
| 15 | 0·0 | 1·7 | 2·7 | 4·0 | 0·1 | 4·5 | 0·7 | 1·9 | 0·7 | 1·5 | 4·5 | 0·4 |
| 16 | 0·0 | 4·1 | 4·2 | 3·1 | 0·4 | 0·7 | 0·7 | 0·9 | 1·8 | 1·3 | 1·8 | 0·8 |
| 17 | 0·0 | 1·2 | 0·8 | 1·8 | 4·0 | 0·2 | 0·5 | 1·7 | 0·8 | 2·2 | 2·8 | 0·6 |
| 18 | 4·4 | 1·9 | 0·1 | 2·0 | 2·1 | 0·2 | 0·5 | 3·3 | 1·2 | 1·2 | 4·3 | 0·3 |
| 19 | 6·2 | 3·3 | 1·4 | 1·8 | 1·8 | 0·4 | 1·0 | 1·7 | 1·3 | 2·1 | 4·0 | 0·1 |
| 20 | 0·8 | 3·1 | 3·7 | 1·5 | 2·2 | 1·0 | 0·4 | 3·0 | 1·5 | 0·9 | 2·0 | 0·1 |
| 21 | 0·8 | 0·4 | 1·2 | 0·6 | 3·0 | 1·7 | 1·2 | 1·2 | 0·3 | 0·2 | 0·5 | 0·1 |
| 22 | 0·2 | 0·7 | 1·5 | 1·9 | 0·3 | 2·2 | 1·4 | 0·2 | 0·2 | 0·5 | 1·0 | 0·1 |
| 23 | 0·0 | 2·3 | 0·5 | 4·8 | 0·4 | 0·9 | 0·9 | 0·4 | 0·4 | 0·4 | 1·4 | 0·1 |
| 24 | 1·2 | 3·0 | 3·3 | 4·5 | 0·5 | 0·6 | 1·0 | 0·4 | 0·2 | 0·2 | 0·3 | 0·2 |
| 25 | 3·5 | 1·4 | 2·1 | 2·4 | 1·0 | 1·7 | 1·2 | 0·6 | 1·1 | 1·2 | 0·2 | 0·4 |
| 26 | 2·8 | 5·2 | 3·0 | 2·3 | 3·1 | 1·4 | 0·4 | 2·2 | 1·7 | 0·9 | 1·5 | 1·3 |
| 27 | 0·9 | 2·3 | 1·9 | 2·4 | 1·4 | 0·5 | 0·4 | 0·7 | 1·7 | 0·7 | 3·4 | 0·1 |
| 28 | 4·8 | 1·2 | 2·9 | 0·5 | 0·2 | 0·8 | 1·6 | 0·3 | 1·6 | 0·8 | 2·0 | 0·1 |
| 29 | 5·7 | 0·9 | 0·8 | 0·6 | 0·5 | 0·6 | 1·7 | 0·7 | 0·7 | 0·7 | 1·7 | 0·3 |
| 30 | 5·7 | | 0·0 | 0·3 | 0·7 | 0·7 | 1·0 | 0·3 | 3·8 | 1·7 | 0·2 | 0·1 |
| 31 | 4·1 | | 1·4 | | 0·3 | | 0·7 | 0·6 | | 2·5 | | 0·1 |
| Mean | 1·7 | 1·8 | 2·5 | 1·9 | 1·1 | 1·7 | 0·9 | 1·4 | 1·1 | 2·0 | 2·1 | 0·6 |

The mean of the daily maximum pressures of wind was greatest in March, November, and October, and was least in December and July. The greatest pressure of wind occurred March 9, 1844.

TABLE XXIX.—Means of the Maximum Pressure of Wind between the Hours of Observation for each Month in 1844.

| Mak. M. T. | Jan. | Feb. | March. | April. | May. | June. | July. | Aug. | Sept. | Oct. | Nov. | Dec. |
|---|---|---|---|---|---|---|---|---|---|---|---|---|
| h. h. | lb. | lb. | lb. | lb. | lb. | lb. | lb. | lb. | lb. | lb. | lb. | lb. |
| 11—12 | 0·66 | 0·35 | 0·48 | 0·28 | 0·18 | 0·40 | 0·10 | 0·35 | 0·26 | 0·64 | 0·94 | 0·14 |
| 12—13 | 0·52 | 0·35 | 0·48 | 0·21 | 0·19 | 0·58 | 0·09 | 0·31 | 0·26 | 0·71 | 0·87 | 0·14 |
| 13—14 | 0·32 | 0·43 | 0·51 | 0·25 | 0·20 | 0·48 | 0·09 | 0·28 | 0·25 | 0·70 | 0·83 | 0·14 |
| 14—15 | 0·46 | 0·48 | 0·43 | 0·28 | 0·13 | 0·42 | 0·06 | 0·28 | 0·19 | 0·71 | 0·78 | 0·10 |
| 15—16 | 0·49 | 0·44 | 0·40 | 0·39 | 0·20 | 0·42 | 0·06 | 0·25 | 0·19 | 0·76 | 0·82 | 0·10 |
| 16—17 | 0·36 | 0·32 | 0·33 | 0·33 | 0·23 | 0·46 | 0·04 | 0·33 | 0·27 | 0·68 | 0·79 | 0·10 |
| 17—18 | 0·26 | 0·42 | 0·40 | 0·33 | 0·23 | 0·58 | 0·09 | 0·35 | 0·32 | 0·71 | 0·86 | 0·12 |
| 18—19 | 0·39 | 0·43 | 0·37 | 0·47 | 0·27 | 0·78 | 0·14 | 0·42 | 0·34 | 0·73 | 0·88 | 0·10 |
| 19—20 | 0·41 | 0·39 | 0·55 | 0·70 | 0·36 | 0·99 | 0·24 | 0·53 | 0·47 | 0·62 | 0·83 | 0·12 |
| 20—21 | 0·66 | 0·45 | 0·94 | 0·83 | 0·46 | 1·04 | 0·34 | 0·48 | 0·56 | 0·68 | 1·01 | 0·09 |
| 21—22 | 0·57 | 0·52 | 1·10 | 1·11 | 0·46 | 0·98 | 0·40 | 0·66 | 0·61 | 1·00 | 1·12 | 0·08 |
| 22—23 | 0·73 | 0·76 | 1·08 | 1·10 | 0·50 | 1·02 | 0·43 | 0·72 | 0·67 | 1·12 | 1·05 | 0·10 |
| 23— 0 | 0·65 | 0·67 | 1·37 | 1·24 | 0·50 | 1·07 | 0·49 | 0·82 | 0·71 | 1·29 | 1·05 | 0·16 |
| 0— 1 | 0·89 | 0·69 | 1·42 | 1·27 | 0·54 | 1·18 | 0·53 | 0·91 | 0·84 | 1·26 | 1·22 | 0·15 |
| 1— 2 | 0·80 | 0·81 | 1·60 | 1·43 | 0·52 | 1·20 | 0·53 | 0·91 | 0·80 | 1·31 | 1·13 | 0·14 |
| 2— 3 | 0·72 | 0·92 | 1·50 | 1·33 | 0·54 | 1·24 | 0·41 | 0·94 | 0·83 | 0·95 | 0·98 | 0·16 |
| 3— 4 | 0·54 | 0·83 | 1·20 | 1·25 | 0·54 | 1·11 | 0·39 | 0·84 | 0·79 | 0·95 | 1·00 | 0·14 |
| 4— 5 | 0·56 | 0·66 | 0·87 | 0·82 | 0·55 | 1·04 | 0·37 | 0·85 | 0·65 | 0·85 | 1·22 | 0·23 |
| 5— 6 | 0·34 | 0·70 | 0·89 | 0·72 | 0·41 | 0·96 | 0·41 | 0·82 | 0·51 | 0·79 | 1·02 | 0·24 |
| 6— 7 | 0·36 | 0·65 | 0·62 | 0·47 | 0·33 | 0·72 | 0·31 | 0·56 | 0·43 | 0·62 | 1·03 | 0·20 |
| 7— 8 | 0·37 | 0·81 | 0·60 | 0·28 | 0·23 | 0·61 | 0·17 | 0·40 | 0·40 | 0·70 | 0·88 | 0·26 |
| 8— 9 | 0·50 | 0·61 | 0·47 | 0·23 | 0·18 | 0·46 | 0·13 | 0·36 | 0·39 | 0·69 | 0·83 | 0·26 |
| 9—10 | 0·45 | 0·52 | 0·57 | 0·17 | 0·16 | 0·36 | 0·16 | 0·39 | 0·38 | 0·65 | 0·74 | 0·28 |
| 10—11 | 0·53 | 0·57 | 0·48 | 0·23 | 0·19 | 0·50 | 0·10 | 0·34 | 0·35 | 0·68 | 0·83 | 0·28 |

In obtaining the means for the maximum pressures between $11^h$ and $12^h$, the observations at $12^h$ on Monday morning were rejected (excepting when the maximum between $12^h$ and $1^h$ was greater), being the maxima from Saturday night or Sunday about noon, the maximum between $12^h$ and $1^h$ being used instead.

TABLE XXX.—Means of the Maximum Pressure of Wind between the Hours of Observation for each of the Astronomical Quarters, and for the Year 1844.

| Mak. M. T. | Nov. Dec. Jan. | Feb. March April. | May June July. | Aug. Sept. Oct. | Year 1844. | Mak. M. T. | Nov. Dec. Jan. | Feb. March April. | May June July. | Aug. Sept. Oct. | Year 1844. |
|---|---|---|---|---|---|---|---|---|---|---|---|
| h. h. | lb. | lb. | lb. | lb. | lb. | h. h. | lb. | lb. | lb. | lb. | lb. |
| 11—12 | 0·58 | 0·37 | 0·23 | 0·42 | 0·43 | 23—0 | 0·62 | 1·09 | 0·69 | 0·94 | 0·83 |
| 12—13 | 0·51 | 0·35 | 0·29 | 0·43 | 0·39 | 0—1 | 0·75 | 1·13 | 0·75 | 1·00 | 0·91 |
| 13—14 | 0·43 | 0·40 | 0·26 | 0·41 | 0·37 | 1—2 | 0·69 | 1·28 | 0·75 | 1·01 | 0·93 |
| 14—15 | 0·45 | 0·40 | 0·20 | 0·39 | 0·36 | 2—3 | 0·62 | 1·25 | 0·73 | 0·91 | 0·88 |
| 15—16 | 0·47 | 0·41 | 0·23 | 0·40 | 0·38 | 3—4 | 0·56 | 1·09 | 0·68 | 0·86 | 0·80 |
| 16—17 | 0·42 | 0·43 | 0·24 | 0·43 | 0·35 | 4—5 | 0·67 | 0·78 | 0·65 | 0·78 | 0·72 |
| 17—18 | 0·41 | 0·38 | 0·30 | 0·46 | 0·39 | 5—6 | 0·53 | 0·77 | 0·59 | 0·71 | 0·65 |
| 18—19 | 0·46 | 0·42 | 0·40 | 0·50 | 0·44 | 6—7 | 0·53 | 0·58 | 0·45 | 0·54 | 0·52 |
| 19—20 | 0·45 | 0·55 | 0·53 | 0·54 | 0·52 | 7—8 | 0·50 | 0·56 | 0·34 | 0·50 | 0·48 |
| 20—21 | 0·59 | 0·74 | 0·61 | 0·57 | 0·63 | 8—9 | 0·53 | 0·44 | 0·26 | 0·48 | 0·43 |
| 21—22 | 0·59 | 0·91 | 0·61 | 0·76 | 0·72 | 9—10 | 0·49 | 0·42 | 0·23 | 0·47 | 0·40 |
| 22—23 | 0·63 | 0·98 | 0·65 | 0·84 | 0·77 | 10—11 | 0·55 | 0·43 | 0·26 | 0·46 | 0·42 |

TABLE XXXI.—Hourly Means of the Maximum Pressure of Wind within $10^m$ *at* the Observation Hours for each Month in 1844.

| Mak. M. T. | Jan. | Feb. | March. | April. | May. | June. | July. | Aug. | Sept. | Oct. | Nov. | Dec. | Year. |
|---|---|---|---|---|---|---|---|---|---|---|---|---|---|
| h. | lb. | lb. | lb. | lb. | lb. | lb. | lb. | lb. | lb. | lb. | lb. | lb. | lb. |
| 12 | 0·38 | 0·22 | 0·24 | 0·08 | 0·09 | 0·28 | 0·04 | 0·20 | 0·17 | 0·48 | 0·53 | 0·08 | 0·23 |
| 13 | 0·23 | 0·22 | 0·29 | 0·08 | 0·14 | 0·25 | 0·04 | 0·19 | 0·17 | 0·51 | 0·61 | 0·06 | 0·23 |
| 14 | 0·32 | 0·27 | 0·31 | 0·21 | 0·06 | 0·30 | 0·06 | 0·15 | 0·14 | 0·57 | 0·51 | 0·06 | 0·25 |
| 15 | 0·33 | 0·33 | 0·31 | 0·18 | 0·06 | 0·24 | 0·04 | 0·21 | 0·12 | 0·55 | 0·60 | 0·06 | 0·25 |
| 16 | 0·31 | 0·22 | 0·19 | 0·21 | 0·12 | 0·36 | 0·02 | 0·20 | 0·12 | 0·51 | 0·57 | 0·05 | 0·24 |
| 17 | 0·20 | 0·22 | 0·22 | 0·20 | 0·15 | 0·38 | 0·03 | 0·20 | 0·20 | 0·41 | 0·57 | 0·06 | 0·24 |
| 18 | 0·21 | 0·20 | 0·22 | 0·19 | 0·13 | 0·46 | 0·05 | 0·23 | 0·19 | 0·52 | 0·58 | 0·06 | 0·25 |
| 19 | 0·24 | 0·36 | 0·30 | 0·27 | 0·17 | 0·62 | 0·09 | 0·32 | 0·25 | 0·41 | 0·55 | 0·08 | 0·30 |
| 20 | 0·27 | 0·23 | 0·50 | 0·58 | 0·30 | 0·66 | 0·19 | 0·37 | 0·38 | 0·44 | 0·57 | 0·08 | 0·38 |
| 21 | 0·32 | 0·27 | 0·68 | 0·83 | 0·30 | 0·73 | 0·20 | 0·47 | 0·42 | 0·66 | 0·72 | 0·04 | 0·47 |
| 22 | 0·39 | 0·33 | 0·71 | 0·76 | 0·29 | 0·72 | 0·32 | 0·46 | 0·52 | 0·74 | 0·63 | 0·04 | 0·49 |
| 23 | 0·48 | 0·50 | 0·87 | 0·75 | 0·34 | 0·74 | 0·27 | 0·50 | 0·51 | 0·78 | 0·58 | 0·04 | 0·53 |
| 0 | 0·43 | 0·49 | 0·96 | 0·96 | 0·28 | 0·79 | 0·30 | 0·60 | 0·53 | 0·80 | 0·88 | 0·10 | 0·59 |
| 1 | 0·59 | 0·57 | 1·39 | 0·75 | 0·34 | 0·74 | 0·36 | 0·67 | 0·64 | 0·81 | 0·73 | 0·08 | 0·64 |
| 2 | 0·67 | 0·66 | 1·10 | 0·91 | 0·36 | 0·84 | 0·32 | 0·61 | 0·60 | 0·89 | 0·61 | 0·08 | 0·64 |
| 3 | 0·32 | 0·48 | 0·85 | 0·79 | 0·36 | 0·78 | 0·24 | 0·58 | 0·58 | 0·75 | 0·69 | 0·10 | 0·54 |
| 4 | 0·44 | 0·50 | 0·68 | 0·62 | 0·30 | 0·70 | 0·23 | 0·58 | 0·46 | 0·52 | 0·68 | 0·07 | 0·48 |
| 5 | 0·39 | 0·33 | 0·51 | 0·57 | 0·28 | 0·66 | 0·30 | 0·47 | 0·45 | 0·55 | 0·82 | 0·17 | 0·46 |
| 6 | 0·29 | 0·48 | 0·48 | 0·31 | 0·16 | 0·49 | 0·24 | 0·48 | 0·32 | 0·42 | 0·70 | 0·12 | 0·37 |
| 7 | 0·24 | 0·51 | 0·32 | 0·17 | 0·12 | 0·38 | 0·16 | 0·34 | 0·25 | 0·49 | 0·70 | 0·11 | 0·32 |
| 8 | 0·29 | 0·42 | 0·30 | 0·10 | 0·12 | 0·31 | 0·07 | 0·31 | 0·23 | 0·45 | 0·64 | 0·21 | 0·29 |
| 9 | 0·27 | 0·49 | 0·35 | 0·07 | 0·09 | 0·17 | 0·07 | 0·27 | 0·26 | 0·45 | 0·57 | 0·12 | 0·27 |
| 10 | 0·30 | 0·39 | 0·37 | 0·10 | 0·06 | 0·21 | 0·06 | 0·25 | 0·23 | 0·45 | 0·60 | 0·17 | 0·27 |
| 11 | 0·39 | 0·31 | 0·30 | 0·12 | 0·11 | 0·24 | 0·05 | 0·30 | 0·33 | 0·43 | 0·59 | 0·20 | 0·28 |

TABLE XXXII.—Hourly Means of the Maximum Pressure of Wind within $10^m$ at the Observation Hours for each of the Astronomical Quarters, and for the Year 1844.

| Mak. M. T. | Nov. Dec. Jan. | Feb. March April. | May June July. | Aug. Sept. Oct. | Year 1844. | Mak. M. T. | Nov. Dec. Jan. | Feb. March April. | May June July. | Aug. Sept. Oct. | Year 1844. |
|---|---|---|---|---|---|---|---|---|---|---|---|
| h. | lb. | lb. | lb. | lb. | lb. | h. | lb. | lb. | lb. | lb. | lb. |
| 12 | 0·33 | 0·18 | 0·14 | 0·28 | 0·23 | 0 | 0·47 | 0·80 | 0·46 | 0·64 | 0·59 |
| 13 | 0·30 | 0·20 | 0·14 | 0·29 | 0·23 | 1 | 0·47 | 0·90 | 0·48 | 0·71 | 0·64 |
| 14 | 0·30 | 0·26 | 0·14 | 0·29 | 0·25 | 2 | 0·45 | 0·89 | 0·51 | 0·70 | 0·64 |
| 15 | 0·33 | 0·27 | 0·11 | 0 29 | 0·25 | 3 | 0·37 | 0·71 | 0·46 | 0·64 | 0·54 |
| 16 | 0·31 | 0·21 | 0·17 | 0·28 | 0·24 | 4 | 0·40 | 0·60 | 0·41 | 0·52 | 0·48 |
| 17 | 0·28 | 0·21 | 0·19 | 0·27 | 0·24 | 5 | 0·46 | 0·47 | 0·41 | 0·49 | 0·46 |
| 18 | 0·28 | 0·20 | 0·21 | 0·31 | 0·25 | 6 | 0·37 | 0·42 | 0·30 | 0·41 | 0·37 |
| 19 | 0·29 | 0·31 | 0·29 | 0·33 | 0·30 | 7 | 0·35 | 0·33 | 0·22 | 0·35 | 0·32 |
| 20 | 0·27 | 0·44 | 0·38 | 0·40 | 0·38 | 8 | 0·38 | 0·27 | 0·17 | 0·33 | 0·29 |
| 21 | 0·36 | 0·59 | 0·41 | 0·52 | 0·47 | 9 | 0·32 | 0·30 | 0·11 | 0·33 | 0·27 |
| 22 | 0·35 | 0·60 | 0·44 | 0·57 | 0·49 | 10 | 0·36 | 0·29 | 0·11 | 0·31 | 0·27 |
| 23 | 0·37 | 0·71 | 0·45 | 0·60 | 0·53 | 11 | 0·39 | 0·24 | 0·13 | 0·35 | 0·28 |

*Diurnal Variation of the Maximum Pressures of Wind.*—The diurnal variation is nearly the same from Tables XXIX. and XXXI. It is probable, however, that the times of maxima and minima deduced from the observations of pressure within $10^m$ at the hours of observation will be more accurate than those obtained

from the maxima between the hours of observation. From both Tables the diurnal variation for each month shews some irregularities; neglecting the means for December, the maximum force of wind (from Table XXXI.) occurs between noon and $2^h$ P.M. and the minimum occurs between $9^h$ P.M. and $6^h$ A.M.; in December the maximum pressure occurred about $10^h$ P.M. and the minimum about $10^h$ A.M. The approximate epochs of pressure of wind from Tables XXX. and XXXII. for each of the astronomical quarters and the year are as follow:—

| | | From Table XXX. | | From Table XXXII. | |
|---|---|---|---|---|---|
| | | Minimum. | Maximum. | Minimum. | Maximum. |
| Winter, | Nov., Dec., Jan., | $5^h$ $10^m$ A.M. | $0^h$ $40^m$ P.M. | $6^h$ $40^m$ A.M. | $1^h$ $0^m$ P.M. |
| Spring, | Feb., March, April, | 12 50 ... | 2 0 ... | 12 10 ... | 1 40 ... |
| Summer, | May, June, July, | 3 0 ... | 1 40 ... | 9 40 P.M. and $3^h$ A.M. | 2 10 ... |
| Autumn, | Aug., Sept., Oct., | 3 10 ... | 1 10 ... | 4 50 ... | 1 40 ... |
| The Year 1844, | | 4 10 ... | 1 50 ... | 12 40 A.M. | 1 40 ... |

The epochs from Table XXXII. are most to be depended on. The differences between the two sets are chiefly in the times of minimum pressure, and these times are not well marked. In the winter quarter, considering the means from Table XXXII., the pressure varies little from $9^h$ P.M. till $8^h$ A.M.: there is the appearance of a secondary maximum about midnight. In spring the minimum occurs at midnight, but there is again a minimum about $5^h$ A.M., a secondary maximum occurring between these times; in summer the pressure is nearly constant from $9^h$ P.M. till $4^h$ A.M., and in autumn it is nearly constant from midnight till $6^h$ A.M. In the mean for the year the pressure of wind varies little from $9^h$ P.M. till $6^h$ A.M.; there is a slight indication of a secondary maximum about $2^h$ or $3^h$ A.M.: the maximum pressure occurs almost exactly at the time of the maximum temperature of the air.

*Annual Variation of the* number *of times which the Wind blew in* 1844.—From Table XXXIII. the numbers of times which the wind blew with a force of 0·1 lb., or upwards, at the hours of observation in 1844 were for each month as follow:—

| Jan. | Feb. | March. | April. | May. | June. | July. | Aug. | Sept. | Oct. | Nov. | Dec. |
|---|---|---|---|---|---|---|---|---|---|---|---|
| 233 | 308 | 382 | 371 | 275 | 400 | 306 | 434 | 442 | 459 | 459 | 176 |

The average numbers a-day out of 24 observations are

| | | | | | | | | | | | |
|---|---|---|---|---|---|---|---|---|---|---|---|
| 8·6 | 12·3 | 14·7 | 14·3 | 10·2 | 16·0 | 11·3 | 16·1 | 17·7 | 17·0 | 17·7 | 6·8 |

The wind blew most frequently in the months from August to November, and with least frequency in January and December. On the whole the wind blew seldomest about the winter solstice and oftener about the equinoxes than about the summer solstice: this result is the reverse of that for 1843.

In 7536 observations, the wind blew 0·1 lb. or upwards 4245 times, or 13·5 times a-day of 24 observations, or 563 times in 1000.

*Annual Variation of the* number *of Points of the Compass in which the Wind blew.*—The following are the numbers of points in which the wind blew in each month of 1844:—

| Jan. | Feb. | March. | April. | May. | June. | July. | Aug. | Sept. | Oct. | Nov. | Dec. |
|---|---|---|---|---|---|---|---|---|---|---|---|
| 19 | 28 | 29 | 19 | 26 | 29 | 32 | 30 | 26 | 31 | 28 | 22 |

Neglecting the points in which the wind was observed to blow less than four times, the numbers of points are

| | | | | | | | | | | | |
|---|---|---|---|---|---|---|---|---|---|---|---|
| 16 | 19 | 22 | 13 | 22 | 20 | 23 | 24 | 20 | 28 | 23 | 15 |

The wind blew from the fewest points in January, April, and December, and from the greatest number about October.

If we divide the number of points from which the wind blew by the number of times which it was observed blowing, the quotient will represent the variability of direction. The quotients for each month are as follow:—

| Jan. | Feb. | March. | April. | May. | June. | July. | Aug. | Sept. | Oct. | Nov. | Dec. |
|---|---|---|---|---|---|---|---|---|---|---|---|
| 0·082 | ·091 | ·076 | ·051 | ·095 | ·072 | ·105 | ·069 | ·059 | ·068 | ·061 | ·125 |

The direction of the wind was most variable in December and July, and least variable in April and September.

TABLE XXXIII.—Number of Times which the Wind blew from each Point of the Compass at the
together with the sums of the Pres-

| Wind blowing from | January. | | February. | | March. | | April. | | May. | | June. | |
|---|---|---|---|---|---|---|---|---|---|---|---|---|
| | Times. | Press. | Times. | Press. | Times. | Press. | Times. | Press. | Times. | Press. | Times. | Press. |
| | | lb. | | lb. | | lb. | | lb. | | lb. | | lb. |
| N. | 2 | 1·1 | 9 | 12·7 | 11 | 12·4 | ... | ... | 18 | 20·1 | 3 | 0·6 |
| N by E. | ... | ... | 2 | 0·7 | 3 | 3·3 | ... | ... | 10 | 8·1 | 6 | 2·0 |
| NNE. | ... | ... | 14 | 19·9 | 8 | 9·1 | ... | ... | 84 | 37·7 | 35 | 13·1 |
| NE by N. | ... | ... | 9 | 14·3 | 7 | 11·4 | ... | ... | 51 | 24·8 | 21 | 9·2 |
| NE. | ... | ... | 6 | 9·8 | 12 | 11·7 | 1 | 0·3 | 27 | 7·7 | 20 | 5·3 |
| NE by E. | ... | ... | ... | ... | 11 | 13·6 | 1 | 0·5 | 13 | 9·6 | 6 | 1·4 |
| ENE. | ... | ... | 3 | 2·0 | 17 | 18·2 | 5 | 1·0 | 12 | 1·8 | 6 | 0·8 |
| E by N. | ... | ... | 4 | 6·8 | 1 | 0·1 | ... | ... | 2 | 0·4 | 5 | 0·6 |
| E. | ... | ... | 4 | 1·2 | ... | ... | ... | ... | 3 | 0·5 | 2 | 0·2 |
| E by S. | ... | ... | 3 | 0·6 | 1 | 0·1 | ... | ... | ... | ... | 1 | 0·1 |
| ESE. | ... | ... | 1 | 0·9 | ... | ... | ... | ... | ... | ... | ... | ... |
| SE by E. | ... | ... | ... | ... | ... | ... | ... | ... | ... | ... | ... | ... |
| SE. | ... | ... | 2 | 0·6 | 1 | 0·2 | 2 | 0·5 | 1 | 0·1 | 1 | 0·1 |
| SE by S. | ... | ... | 3 | 1·4 | 2 | 0·4 | 3 | 0·5 | 2 | 0·3 | ... | ... |
| SSE. | 4 | 2·0 | 3 | 0·8 | 2 | 0·6 | 1 | 0·1 | 10 | 3·1 | 1 | 0·4 |
| S by E. | 6 | 3·3 | ... | ... | 4 | 1·4 | 2 | 0·3 | 5 | 1·8 | 7 | 4·3 |
| S. | 9 | 7·0 | 1 | 0·1 | 1 | 1·0 | ... | ... | 1 | 0·1 | 9 | 3·3 |
| S by W. | 3 | 1·1 | ... | ... | 6 | 4·3 | 5 | 1·9 | ... | ... | 15 | 5·8 |
| SSW. | 20 | 7·8 | 4 | 1·4 | 18 | 5·0 | 28 | 12·2 | 2 | 0·3 | 47 | 29·2 |
| SW by S. | 14 | 11·0 | 12 | 7·5 | 33 | 29·9 | 74 | 52·2 | 2 | 0·3 | 42 | 34·6 |
| SW. | 29 | 25·5 | 76 | 46·2 | 94 | 69·4 | 113 | 86·9 | 2 | 0·2 | 68 | 69·2 |
| SW by W. | 9 | 5·2 | 24 | 9·1 | 20 | 12·2 | 38 | 19·7 | ... | ... | 17 | 21·7 |
| WSW. | 19 | 19·0 | 14 | 6·8 | 13 | 12·0 | 16 | 5·6 | ... | ... | 26 | 21·5 |
| W by S. | 20 | 23·5 | 9 | 7·7 | 7 | 5·0 | 13 | 8·1 | 2 | 0·2 | 13 | 18·9 |
| W. | 29 | 50·7 | 10 | 9·4 | 14 | 24·6 | 20 | 13·0 | 3 | 0·7 | 15 | 22·9 |
| W by N. | 13 | 14·2 | 5 | 4·2 | 12 | 8·7 | 19 | 19·2 | 2 | 0·3 | 12 | 16·1 |
| WNW. | 10 | 12·4 | 3 | 0·8 | 7 | 6·0 | 17 | 21·1 | 3 | 0·5 | 9 | 16·1 |
| NW by W. | 6 | 8·1 | 10 | 10·4 | 5 | 15·9 | 7 | 7·1 | 1 | 0·6 | 2 | 2·3 |
| NW. | 27 | 21·3 | 33 | 14·6 | 27 | 16·1 | 6 | 5·0 | 3 | 1·0 | 3 | 0·3 |
| NW by N. | 4 | 2·2 | 10 | 4·3 | 14 | 8·4 | ... | ... | 4 | 1·1 | 1 | 0·1 |
| NNW. | 8 | 7·8 | 17 | 10·5 | 19 | 16·0 | ... | ... | 4 | 1·3 | 1 | 0·3 |
| N by W. | 1 | 0·2 | 17 | 20·3 | 12 | 6·9 | ... | ... | 8 | 4·8 | 6 | 1·5 |

Observation Hours, with a Pressure of one-tenth of a pound or upwards on a square foot of surface, sures, for each Month in 1844.

| July. | | August. | | September. | | October. | | November. | | December. | | Wind blowing from |
|---|---|---|---|---|---|---|---|---|---|---|---|---|
| Times. | Press. | Times. | Press. | Times. | Press. | Times. | Press. | Times. | Press. | Times. | Press. | |
| | lb. | | lb. | | lb. | | lb. | | lb. | | lb. | |
| 5 | 1·4 | 7 | 4·9 | 2 | 0·3 | 3 | 0·4 | 1 | 0·1 | ... | ... | N. |
| 5 | 0·8 | 2 | 0·2 | 2 | 0·2 | 9 | 2·2 | 1 | 0·1 | 1 | 0·1 | N by E. |
| 17 | 4·3 | 3 | 0·5 | 23 | 7·6 | 20 | 5·9 | 9 | 6·4 | 4 | 0·5 | NNE. |
| 7 | 1·4 | 6 | 1·7 | 32 | 8·9 | 6 | 1·3 | 14 | 14·4 | 2 | 0·3 | NE by N. |
| 23 | 4·5 | 17 | 5·2 | 80 | 24·9 | 9 | 1·6 | 62 | 50·8 | 15 | 2·9 | NE. |
| 8 | 2·0 | 7 | 5·3 | 27 | 17·6 | ... | ... | 7 | 3·9 | 5 | 0·6 | NE by E. |
| 14 | 2·3 | 14 | 11·7 | 33 | 14·6 | 3 | 0·5 | 30 | 23·5 | 11 | 4·4 | ENE. |
| 2 | 1·4 | 3 | 1·5 | 1 | 0·6 | 4 | 0·8 | 16 | 38·9 | 14 | 5·8 | E by N. |
| 7 | 1·3 | 4 | 2·1 | 4 | 2·5 | 9 | 2·0 | 13 | 24·0 | 23 | 10·8 | E. |
| 2 | 0·4 | ... | ... | ... | ... | 4 | 1·2 | 7 | 14·8 | 4 | 2·2 | E. by S. |
| 2 | 0·4 | 3 | 0·4 | ... | ... | 10 | 7·0 | 6 | 6·6 | 10 | 2·9 | ESE. |
| 1 | 0·2 | 2 | 0·2 | ... | ... | 8 | 9·1 | 3 | 4·2 | 1 | 0·9 | SE by E. |
| 7 | 1·2 | ... | ... | 1 | 0·1 | 35 | 30·4 | 5 | 0·9 | 10 | 2·3 | SE. |
| 8 | 2·2 | 1 | 2·4 | ... | ... | 15 | 28·6 | ... | ... | 1 | 0·2 | SE by S. |
| 4 | 1·1 | 15 | 11·9 | ... | ... | 16 | 22·4 | 6 | 3·1 | 21 | 9·9 | SSE. |
| 3 | 1·3 | 4 | 0·9 | ... | ... | 17 | 8·8 | 6 | 1·8 | 16 | 5·1 | S by E. |
| 5 | 0·9 | 6 | 4·2 | 1 | 0·1 | 18 | 21·9 | 26 | 5·7 | 13 | 5·9 | S. |
| 3 | 0·4 | 5 | 3·6 | 5 | 2·6 | 19 | 8·1 | 20 | 9·6 | ... | ... | S by W. |
| 6 | 1·0 | 19 | 10·1 | 23 | 12·1 | 22 | 8·5 | 50 | 41·9 | 9 | 1·2 | SSW. |
| 7 | 4·1 | 19 | 22·3 | 20 | 14·1 | 11 | 6·7 | 29 | 25·7 | 1 | 0·1 | SW by S. |
| 40 | 15·8 | 51 | 23·8 | 69 | 46·7 | 52 | 39·6 | 76 | 71·3 | 7 | 0·7 | SW. |
| 20 | 8·6 | 21 | 8·3 | 19 | 10·5 | 17 | 10·8 | 21 | 16·1 | 4 | 0·4 | SW by W. |
| 17 | 7·9 | 46 | 19·6 | 34 | 18·1 | 38 | 26·8 | 18 | 10·5 | 2 | 0·2 | WSW. |
| 14 | 2·7 | 28 | 19·2 | 21 | 7·6 | 10 | 15·8 | 8 | 7·5 | ... | ... | W by S. |
| 13 | 4·9 | 34 | 18·8 | 20 | 5·4 | 14 | 11·2 | 11 | 7·5 | ... | ... | W. |
| 3 | 1·9 | 22 | 20·1 | 7 | 3·2 | 8 | 11·9 | 5 | 4·4 | ... | ... | W by N. |
| 6 | 3·4 | 17 | 8·4 | 6 | 1·4 | 19 | 33·9 | 5 | 1·6 | ... | ... | WNW. |
| 3 | 1·7 | 8 | 5·8 | 2 | 1·1 | 4 | 2·2 | ... | ... | ... | ... | NW by W. |
| 19 | 9·7 | 28 | 12·6 | 4 | 0·7 | 34 | 29·8 | 3 | 0·9 | ... | ... | NW. |
| 3 | 1·9 | 14 | 4·1 | ... | ... | 12 | 9·0 | ... | ... | ... | ... | NW by N. |
| 17 | 5·6 | 18 | 6·1 | ... | ... | 11 | 7·1 | ... | ... | 2 | 0·2 | NNW. |
| 15 | 3·9 | 10 | 5·7 | 6 | 1·0 | 2 | 1·7 | 1 | 0·1 | ... | ... | N by W. |

*Annual Variation of the Mean Pressure of Wind* when *blowing*.—The annual variation of the mean pressure of wind, obtained by dividing the sums of pressures observed, by the whole number of observations, has been already considered. If, however, we divide the sums of pressures observed by the number of observations for which a pressure of 0·1 lb. or more was observed, we obtain the means of pressures for the *time* which the wind blew. The sums of pressure for each month from Table XXXIII. are as follow :—

| Jan. | Feb. | March. | April. | May. | June. | July. | Aug. | Sept. | Oct. | Nov. | Dec. |
|---|---|---|---|---|---|---|---|---|---|---|---|
| lb. | lb. | lb. | lb. | lb. | lb. | lb. | lb. | lb. | lb. | lb. | lb. |
| 223·4 | 225·0 | 323·9 | 255·2 | 127·4 | 301·9 | 100·7 | 241·6 | 201·9 | 367·2 | 396·3 | 57·5 |

Dividing these quantities by the number of times which the wind blew in the respective months we have

| lb. | lb. | lb. | lb. | lb. | lb. | lb. | lb. | lb. | lb. | lb. | lb. |
|---|---|---|---|---|---|---|---|---|---|---|---|
| 0·96 | 0·73 | 0·85 | 0·69 | 0·46 | 0·75 | 0·33 | 0·56 | 0·46 | 0·80 | 0·86 | 0·33 |

These means shew generally that the pressure of the wind was least about the warmest quarter and greatest about the coldest quarter of 1844. The mean for December is an exception to the generality of the result for 1844.

The mean pressure with which the wind blew in 1844 = 0·665 lb.

TABLE XXXIV.—Sums of the Pressures of the Wind in Table XXXIII., resolved into the Four Cardinal Points of the Compass, together with the Value and Direction of the Resultant, for each Month, for each of the Meteorological and Astronomical Quarters, and for the Year 1844.

| Period 1844. | Sums of Pressures resolved into | | | | Resultant | | | |
|---|---|---|---|---|---|---|---|---|
| | N. | E. | S. | W. | Sums. | Means with reference to Whole No. of Obs. | Means with reference to No. of Obs. Wind blowing. | Directions. |
| | lb. | lb. | lb. | lb. | lb. | lb. | lb. | ° |
| January | 37·4 | 1·4 | 62·2 | 174·4 | 174·8 | 0·27 | 0·75 | W. 8 S. |
| February | 103·1 | 34·7 | 52·7 | 102·4 | 84·4 | 0·14 | 0·27 | W. 37 N. |
| March | 109·2 | 47·7 | 98·6 | 169·8 | 122·6 | 0·20 | 0·32 | W. 5 N. |
| April | 20·1 | 2·3 | 133·9 | 185·7 | 215·8 | 0·35 | 0·58 | W. 32 S. |
| May | 103·0 | 47·8 | 5·7 | 5·3 | 106·2 | 0·16 | 0·39 | N. 24 E. |
| June | 39·9 | 18·1 | 142·4 | 193·0 | 202·7 | 0·34 | 0·51 | W. 30 S. |
| July | 33·0 | 16·0 | 30·4 | 53·2 | 37·3 | 0·06 | 0·12 | W. 4 N. |
| August | 52·2 | 30·3 | 82·3 | 143·3 | 116·9 | 0·18 | 0·27 | W. 15 S. |
| September | 51·2 | 56·7 | 72·9 | 90·2 | 39·9 | 0·07 | 0·09 | W. 33 S. |
| October | 64·1 | 70·8 | 173·3 | 171·0 | 148·2 | 0·23 | 0·32 | S. 43 W. |
| November | 75·0 | 159·8 | 153·1 | 126·9 | 84·7 | 0·14 | 0·18 | S. 23 E. |
| December | 6·2 | 35·7 | 25·8 | 1·7 | 39·3 | 0·06 | 0·22 | E. 30 S. |
| Mean Met. Qrs. | | | | | | | | |
| Spring | 232·3 | 97·8 | 238·2 | 360·8 | 263·1 | 0·14 | 0·26 | W. 1 S. |
| Summer | 125·1 | 64·4 | 255·1 | 389·5 | 350·1 | 0·18 | 0·31 | W. 22 S. |
| Autumn | 190·3 | 287·3 | 399·3 | 388·1 | 232·0 | 0·12 | 0·17 | S. 26 W. |
| Winter | 146·7 | 71·8 | 140·7 | 278·5 | 206·8 | 0·11 | 0·29 | W. 2 N. |
| Astron. Qrs. | | | | | | | | |
| Spring | 232·4 | 84·7 | 285·2 | 457·9 | 376·9 | 0·20 | 0·35 | W. 8 S. |
| Summer | 175·9 | 81·9 | 178·5 | 251·5 | 169·6 | 0·09 | 0·17 | W. 1 S. |
| Autumn | 167·5 | 157·8 | 328·5 | 404·5 | 294·6 | 0·16 | 0·22 | W. 33 S. |
| Winter | 118·6 | 196·9 | 241·1 | 303·0 | 162·1 | 0·09 | 0·19 | S. 41 W. |
| The Year | 694·4 | 521·3 | 1033·3 | 1416·9 | 957·6 | 0·13 | 0·23 | W. 21 S. |

Spring for the meteorological quarters = March, April, May; and for the astronomical quarter = February, March, April.

The first column of resultant means is obtained by dividing the resultant sums by the whole number of observations of 24 a-day; the second column is obtained by dividing the resultant sums by the number of observations for which the wind was blowing.

*Annual Variation of the Resultant Pressure of the Wind.*—The resultant mean, with reference to the whole number of observations, was greatest in April and least in July, September, and December. It was greatest in the meteorological summer and least in the meteorological winter; it was greatest in the astronomical spring and least in the astronomical summer and winter. The resultant mean, with reference to the time during which the wind was blowing, was greatest in January and was least in September; it was greatest in the meteorological summer and least in the autumn; it was greatest in the astronomical spring and least in the summer.

*The direction of the resultant* was between W. and N. in February, March, and July; between S. and W. in January, April, June, August, September, and October; between N. and E. in May; and between S. and E. in November and December. The direction of the resultant for the meteorological quarters is between S. and W. in the quarters, spring, summer, and autumn, and it is nearly W. in winter; it is between S. and W. in all the astronomical quarters.

The direction of the resultant pressure of wind for 1844, ..... =W. 21° S.
..... 1843, (Table XXXII., p. 299, 1843) =W. 21° S.

*Diurnal Variation of the* number *of Times which the Wind blew* 0·1 lb., or upwards, in 1844. From Table XXXV. the numbers for each hour are as follow:—

| 12h | 1h A.M. | 2h | 3h | 4h | 5h | 6h | 7h | 8h | 9h | 10h | 11h | 0h | 1h P.M. | 2h | 3h | 4h | 5h | 6h | 7h | 8h | 9h | 10h | 11h |
|---|---|---|---|---|---|---|---|---|---|---|---|---|---|---|---|---|---|---|---|---|---|---|---|
| 122 | 132 | 126 | 137 | 125 | 133 | 143 | 167 | 195 | 204 | 218 | 225 | 236 | 237 | 237 | 232 | 217 | 216 | 197 | 174 | 149 | 139 | 139 | 148 |

The wind blew oftenest about 1h 20m P.M., nearly the time of maximum temperature and seldomest about 2h A.M., the number being twice as great for the maximum as for the minimum.

*Diurnal Variation of the* number *of Points of the Compass from which the Wind blew.*—The numbers of points in which the wind blew (0·1 lb., or upwards) oftener than once, twice, or thrice, are as follow:—

| Oftener than | 12h | 1h A.M. | 2h | 3h | 4h | 5h | 6h | 7h | 8h | 9h | 10h | 11h | 0h | 1h P.M. | 2h | 3h | 4h | 5h | 6h | 7h | 8h | 9h | 10h | 11h |
|---|---|---|---|---|---|---|---|---|---|---|---|---|---|---|---|---|---|---|---|---|---|---|---|---|
| 0 times, | 27 | 29 | 29 | 25 | 27 | 25 | 28 | 28 | 30 | 30 | 30 | 31 | 30 | 32 | 32 | 30 | 30 | 31 | 32 | 28 | 28 | 29 | 30 | 30 |
| 1 ..... | 22 | 23 | 20 | 22 | 24 | 22 | 21 | 26 | 25 | 26 | 28 | 29 | 30 | 30 | 28 | 30 | 28 | 28 | 28 | 25 | 24 | 22 | 23 | 22 |
| 2 ..... | 18 | 16 | 16 | 18 | 17 | 17 | 17 | 18 | 22 | 22 | 27 | 24 | 27 | 28 | 25 | 27 | 27 | 26 | 23 | 21 | 18 | 16 | 19 | 19 |
| 3 ..... | 13 | 11 | 12 | 13 | 13 | 12 | 15 | 16 | 18 | 20 | 23 | 21 | 20 | 24 | 23 | 21 | 21 | 23 | 18 | 17 | 15 | 14 | 14 | 15 |

The wind blows from the greatest number of points about the time of maximum temperature, and from the least number about the time of minimum temperature. If we divide the number of points for each hour by the number of times which the wind blew from them, the quotient will represent the variability of direction. These quotients are as follow:—

| 12h | 1h A.M. | 2h | 3h | 4h | 5h | 6h | 7h | 8h | 9h | 10h | 11h | 0h | 1h P.M. | 2h | 3h | 4h | 5h | 6h | 7h | 8h | 9h | 10h | 11h |
|---|---|---|---|---|---|---|---|---|---|---|---|---|---|---|---|---|---|---|---|---|---|---|---|
| 0·22 | 0·22 | 0·23 | 0·18 | 0·22 | 0.19 | 0·20 | 0·17 | 0·15 | 0·15 | 0·14 | 0·14 | 0·13 | 0·14 | 0·14 | 0·13 | 0·14 | 0·14 | 0·17 | 0·16 | 0·19 | 0·21 | 0·22 | 0·20 |

If the points of the compass be rejected for which the wind blew only once, the variability at the several hours will be represented by the following quantities:—

| | | | | | | | | | | | | | | | | | | | | | | | |
|---|---|---|---|---|---|---|---|---|---|---|---|---|---|---|---|---|---|---|---|---|---|---|---|
| 0·19 | 0·18 | 0·17 | 0·17 | 0·20 | 0·17 | 0·15 | 0·16 | 0·13 | 0·13 | 0·13 | 0·13 | 0·13 | 0·13 | 0·12 | 0·13 | 0·13 | 0·13 | 0·15 | 0·15 | 0·17 | 0·17 | 0·17 | 0·16 |

From both series the variability of direction of the wind is least about the time of maximum temperature and greatest about midnight. The variability, however, has nearly a constant value from 8h A.M. till 5h P.M.

*Diurnal Variation of the Mean Pressure of Wind* while *blowing.*—If we divide the sums of pressures for each hour (obtained from Table XXXV.) by the number of times which the wind was observed blowing, we obtain the following mean pressures:—

| 12h | 1h A.M. | 2h | 3h | 4h | 5h | 6h | 7h | 8h | 9h | 10h | 11h | 0h | 1h P.M. | 2h | 3h | 4h | 5h | 6h | 7h | 8h | 9h | 10h | 11h |
|---|---|---|---|---|---|---|---|---|---|---|---|---|---|---|---|---|---|---|---|---|---|---|---|
| 0·60 | ·55 | ·61 | ·58 | ·60 | ·56 | ·56 | ·57 | ·61 | ·72 | ·71 | ·74 | ·79 | ·84 | ·84 | ·73 | ·69 | ·66 | ·59 | ·57 | ·60 | ·60 | ·60 | ·60 |

The average pressure of the wind while blowing was greatest at 1h 40m P.M., and it was least about 6h A.M.; it had nearly the same value about 7h P.M. as at 6h A.M., the pressure from 8h P.M. till 4h A.M. being slightly greater than at either of these hours.

TABLE XXXV.—Number of Times which the Wind blew from each Point of the Compass with the *sums* of the Pres-

| Mak. M. T. | Number of times which the Wind blew from each | | | | | | | | | | | | | | | |
|---|---|---|---|---|---|---|---|---|---|---|---|---|---|---|---|---|
| | N. | N by E. | NNE. | NE by N. | NE. | NE by E. | ENE. | E by N. | E. | E by S. | ESE. | SE by E. | SE. | SE by S. | SSE. | S by E. |
| h. | | | | | | | | | | | | | | | | |
| 12 | ... | 1 | 4 | 3 | 9 | 4 | 5 | 2 | 3 | ... | 2 | 1 | 1 | ... | ... | 5 |
| 13 | ... | 2 | 6 | 5 | 11 | 1 | 5 | 1 | 2 | 2 | 2 | 1 | 2 | 1 | 1 | 2 |
| 14 | ... | 1 | 7 | 6 | 8 | 1 | 1 | 2 | 4 | 1 | 1 | 1 | 1 | 1 | 2 | 3 |
| 15 | ... | 1 | 9 | 5 | 9 | 4 | 3 | 3 | ... | ... | 3 | ... | 1 | ... | 3 | ... |
| 16 | ... | ... | 4 | 7 | 6 | 2 | 2 | 4 | 2 | ... | 1 | 2 | ... | 1 | 3 | 1 |
| 17 | 2 | 1 | 3 | 5 | 8 | ... | 4 | 4 | ... | ... | ... | 2 | ... | ... | 2 | 3 |
| 18 | 2 | 2 | 5 | 5 | 9 | 3 | 5 | 1 | 1 | ... | 1 | 1 | ... | ... | 1 | 2 |
| 19 | 2 | 1 | 7 | 11 | 6 | 2 | 8 | 2 | 3 | 1 | ... | ... | 2 | ... | 2 | 2 |
| 20 | 4 | 1 | 11 | 6 | 10 | 4 | 6 | 3 | 3 | ... | 1 | 1 | 2 | 1 | 1 | 2 |
| 21 | 5 | 1 | 12 | 9 | 10 | 6 | 5 | 2 | 2 | 1 | ... | ... | 1 | 3 | 2 | 2 |
| 22 | 3 | 3 | 11 | 8 | 16 | 4 | 5 | 4 | 5 | 1 | ... | 1 | 3 | 2 | ... | 4 |
| 23 | 6 | 3 | 11 | 5 | 16 | 8 | 5 | 1 | 4 | 2 | 3 | ... | 4 | 2 | 2 | 2 |
| 0 | 3 | 5 | 9 | 12 | 15 | 5 | 11 | 2 | 7 | ... | 3 | ... | 3 | 3 | 5 | 2 |
| 1 | 3 | 3 | 13 | 7 | 10 | 7 | 10 | 4 | 5 | 1 | 3 | 1 | 5 | 2 | 5 | 4 |
| 2 | 5 | 1 | 15 | 7 | 13 | 6 | 11 | 3 | 2 | 1 | 2 | 1 | 7 | 2 | 8 | 3 |
| 3 | 2 | 3 | 14 | 9 | 17 | 9 | 6 | 4 | 2 | 3 | ... | ... | 5 | 2 | 11 | 4 |
| 4 | 3 | 2 | 15 | 3 | 19 | 4 | 13 | 1 | 7 | 1 | ... | ... | 6 | 3 | 4 | 5 |
| 5 | 3 | 1 | 10 | 7 | 16 | 6 | 10 | 4 | 3 | 2 | 1 | ... | 7 | 1 | 9 | 7 |
| 6 | 2 | 2 | 11 | 5 | 16 | 3 | 10 | 3 | 3 | 2 | 2 | 1 | 3 | 1 | 9 | 4 |
| 7 | 2 | ... | 15 | 8 | 13 | 1 | 4 | 1 | 3 | ... | 2 | ... | 5 | 3 | 3 | 2 |
| 8 | 2 | 4 | 11 | 6 | 8 | 1 | 4 | ... | 3 | ... | ... | ... | 3 | 3 | 1 | 2 |
| 9 | 7 | ... | 4 | 5 | 7 | 3 | 5 | ... | 2 | 1 | 1 | ... | 2 | 2 | 2 | 4 |
| 10 | 2 | 1 | 5 | 3 | 10 | 1 | 5 | 1 | 2 | ... | 2 | 1 | 1 | 1 | 3 | 4 |
| 11 | 3 | 2 | 5 | 8 | 10 | ... | 5 | ... | 1 | 3 | 2 | 1 | 1 | 1 | 4 | 1 |
| Sums | 61 | 41 | 217 | 155 | 272 | 85 | 148 | 52 | 69 | 22 | 32 | 15 | 65 | 35 | 83 | 70 |

| | Sums of Pressures with which the Wind blew from | | | | | | | | | | | | | | | |
|---|---|---|---|---|---|---|---|---|---|---|---|---|---|---|---|---|
| h. | lb. | lb. | lb. | lb. | lb. | lb. | lb. | lb. | lb. | lb. | lb. | lb. | lb. | lb. | lb. | lb. |
| 12 | ... | 0·2 | 1·6 | 1·1 | 3·4 | 1·3 | 1·5 | 0·4 | 1·8 | ... | 1·8 | 1·4 | 0·6 | ... | ... | 3·4 |
| 13 | ... | 0·3 | 1·8 | 5·2 | 2·8 | 0·3 | 1·1 | 0·1 | 0·5 | 3·1 | 1·7 | 2·0 | 0·9 | 2·8 | 0·1 | 0·7 |
| 14 | ... | 0·3 | 2·4 | 1·9 | 5·3 | 0·5 | 0·1 | 1·0 | 2·9 | 0·4 | 0·3 | 1·3 | 1·7 | 1·8 | 3·2 | 0·6 |
| 15 | ... | 0·1 | 2·1 | 2·8 | 4·1 | 0·9 | 0·9 | 6·7 | ... | ... | 1·3 | ... | 0·8 | ... | 4·9 | ... |
| 16 | ... | ... | 2·1 | 3·6 | 1·8 | 0·9 | 0·9 | 5·8 | 0·6 | ... | 0·2 | 1·9 | ... | 3·1 | 2·6 | 0·2 |
| 17 | 1·3 | 0·8 | 0·4 | 5·2 | 3·2 | ... | 1·7 | 5·8 | ... | ... | ... | 2·2 | ... | ... | 1·8 | 1·0 |
| 18 | 1·0 | 0·5 | 3·7 | 1·6 | 3·2 | 2·3 | 3·4 | 3·4 | 0·6 | ... | 1·1 | 0·4 | ... | ... | 3·8 | 0·5 |
| 19 | 0·6 | 0·1 | 2·8 | 6·8 | 2·1 | 0·3 | 4·3 | 3·0 | 2·3 | 0·3 | ... | ... | 0·6 | ... | 2·8 | 0·6 |
| 20 | 4·3 | 0·2 | 6·2 | 4·4 | 3·0 | 2·7 | 5·4 | 2·4 | 2·7 | ... | 0·1 | 0·5 | 0·8 | 2·1 | 0·5 | 1·8 |
| 21 | 5·6 | 0·5 | 5·7 | 4·9 | 4·0 | 6·2 | 3·8 | 1·8 | 1·0 | 2·2 | ... | ... | 0·9 | 4·4 | 0·3 | 0·4 |
| 22 | 3·0 | 1·1 | 5·5 | 6·4 | 7·8 | 2·2 | 2·2 | 3·6 | 2·5 | 1·8 | ... | 0·1 | 2·3 | 2·7 | ... | 2·2 |
| 23 | 7·0 | 2·8 | 5·6 | 1·8 | 6·4 | 6·8 | 2·6 | 2·8 | 1·4 | 1·7 | 0·4 | ... | 2·0 | 3·0 | 1·2 | 0·4 |
| 0 | 4·8 | 0·9 | 4·7 | 6·3 | 7·6 | 2·6 | 5·5 | 3·0 | 3·1 | ... | 0·9 | ... | 1·1 | 2·3 | 2·9 | 1·6 |
| 1 | 7·3 | 2·3 | 8·4 | 5·7 | 5·6 | 4·0 | 5·5 | 2·3 | 4·3 | 0·4 | 0·5 | 1·3 | 2·7 | 0·4 | 2·5 | 1·4 |
| 2 | 4·6 | 2·1 | 7·5 | 6·3 | 7·4 | 5·5 | 4·3 | 3·9 | 1·0 | 0·1 | 2·1 | 0·1 | 4·1 | 0·4 | 4·6 | 2·5 |
| 3 | 1·5 | 1·7 | 6·4 | 7·3 | 8·9 | 5·9 | 3·9 | 2·6 | 0·6 | 2·5 | ... | ... | 1·3 | 2·8 | 4·6 | 1·0 |
| 4 | 1·5 | 0·6 | 6·5 | 1·9 | 10·9 | 3·2 | 7·1 | 0·5 | 3·3 | 0·2 | ... | ... | 3·2 | 1·1 | 0·6 | 1·5 |
| 5 | 1·1 | 0·5 | 3·5 | 3·4 | 9·6 | 3·2 | 3·0 | 2·0 | 2·9 | 1·3 | 0·2 | ... | 3·0 | 0·2 | 5·8 | 2·6 |
| 6 | 0·5 | 0·3 | 6·9 | 2·0 | 6·7 | 1·6 | 4·8 | 1·5 | 3·1 | 0·2 | 1·6 | 0·2 | 2·3 | 0·1 | 4·8 | 0·8 |
| 7 | 0·3 | ... | 9·0 | 2·4 | 4·9 | 0·3 | 3·3 | 3·5 | 0·8 | ... | 0·7 | ... | 4·2 | 2·6 | 0·5 | 0·7 |
| 8 | 0·2 | 1·3 | 7·7 | 1·2 | 3·9 | 1·7 | 3·2 | ... | 4·3 | ... | ... | ... | 2·2 | 2·5 | 0·1 | 0·2 |
| 9 | 6·8 | ... | 1·1 | 1·5 | 2·3 | 1·7 | 5·2 | ... | 0·6 | 2·4 | 1·4 | ... | 0·9 | 1·4 | 0·2 | 2·7 |
| 10 | 0·2 | 0·1 | 2·2 | 1·0 | 5·9 | 0·4 | 3·4 | 0·8 | 3·3 | ... | 2·5 | 0·9 | 0·3 | 2·0 | 2·8 | 2·1 |
| 11 | 2·4 | 1·0 | 1·0 | 3·0 | 3·8 | ... | 3·6 | ... | 1·0 | 2·8 | 1·4 | 2·3 | 0·5 | 0·3 | 4·8 | 0·1 |
| Sums | 54·0 | 17·7 | 104·8 | 87·7 | 124·6 | 54·5 | 80·7 | 56·9 | 44·6 | 19·4 | 18·2 | 14·6 | 36·4 | 36·0 | 55·4 | 29·0 |

with a Pressure of one-tenth of a pound or upwards upon a square foot of surface, together
sures for each Hour in 1844.

Point of the Compass at each Hour in 1844.

| S. | S by W. | SSW. | SW by S. | SW. | SW by W. | WSW. | W by S. | W. | W by N. | WNW. | NW by W. | NW. | NW by N. | NNW. | N by W. | Mak. M. T. |
|---|---|---|---|---|---|---|---|---|---|---|---|---|---|---|---|---|
| | | | | | | | | | | | | | | | | h. |
| 1 | ... | 7 | 8 | 23 | 9 | 4 | 6 | 6 | 3 | 3 | 2 | 4 | 3 | 2 | 1 | 12 |
| 5 | 1 | 8 | 8 | 23 | 7 | 11 | 3 | 8 | 2 | 3 | 3 | 3 | 3 | ... | ... | 13 |
| 2 | 4 | 10 | 5 | 24 | 7 | 13 | 3 | 4 | 3 | 5 | 1 | 2 | 3 | ... | ... | 14 |
| 2 | 5 | 9 | 10 | 26 | 9 | 3 | 6 | 6 | 5 | 2 | ... | 8 | 2 | 2 | 1 | 15 |
| 2 | 4 | 7 | 8 | 23 | 8 | 7 | 7 | 3 | 4 | 3 | 2 | 7 | 2 | 3 | ... | 16 |
| 3 | 1 | 13 | 12 | 24 | 12 | 10 | 5 | 4 | 1 | ... | 2 | 4 | 3 | 3 | 2 | 17 |
| 6 | 3 | 13 | 10 | 23 | 5 | 17 | 4 | 5 | 1 | 2 | ... | 6 | 4 | 4 | 1 | 18 |
| 4 | 4 | 13 | 15 | 25 | 6 | 13 | 9 | 7 | 2 | 3 | ... | 7 | 4 | 4 | 2 | 19 |
| 5 | 5 | 7 | 20 | 29 | 15 | 13 | 7 | 10 | 4 | 3 | ... | 12 | 4 | 2 | 3 | 20 |
| 4 | 7 | 14 | 14 | 29 | 8 | 7 | 11 | 9 | 6 | 9 | 1 | 13 | 4 | 4 | 3 | 21 |
| 5 | 5 | 7 | 15 | 29 | 10 | 11 | 6 | 10 | 9 | 7 | 4 | 9 | 3 | 8 | 10 | 22 |
| 2 | 4 | 19 | 8 | 33 | 14 | 10 | 7 | 9 | 5 | 6 | 5 | 18 | 1 | 7 | 3 | 23 |
| 2 | 8 | 12 | 15 | 35 | 9 | 10 | 6 | 10 | 7 | 8 | 3 | 16 | 3 | 3 | 4 | 0 |
| 5 | 4 | 10 | 16 | 31 | 14 | 17 | 4 | 6 | 10 | 8 | 3 | 12 | 2 | 6 | 6 | 1 |
| 5 | 5 | 8 | 14 | 34 | 13 | 10 | 8 | 11 | 7 | 6 | 6 | 11 | 1 | 6 | 5 | 2 |
| 4 | 4 | 9 | 15 | 36 | 6 | 10 | 5 | 13 | 14 | 3 | 3 | 8 | 3 | 5 | 3 | 3 |
| 4 | 3 | 7 | 14 | 30 | 7 | 14 | 7 | 8 | 7 | 5 | 3 | 10 | 4 | 3 | 5 | 4 |
| 5 | 4 | 10 | 15 | 29 | 7 | 8 | 6 | 6 | 8 | 6 | 3 | 5 | 2 | 10 | 5 | 5 |
| 3 | 1 | 13 | 9 | 31 | 8 | 5 | 7 | 8 | 4 | 7 | 2 | 6 | 1 | 8 | 7 | 6 |
| 4 | 3 | 9 | 9 | 26 | 12 | 8 | 9 | 9 | 2 | 4 | 1 | 7 | ... | 5 | 5 | 7 |
| 6 | 2 | 11 | 5 | 27 | 5 | 13 | 6 | 9 | 2 | 2 | 1 | 5 | 1 | 2 | 4 | 8 |
| 6 | 1 | 14 | 10 | 25 | 7 | 7 | 2 | 9 | 1 | 1 | 1 | 4 | 3 | 2 | 1 | 9 |
| 4 | 2 | 6 | 5 | 36 | 6 | 7 | 6 | 7 | ... | 3 | 1 | 4 | 3 | 3 | 4 | 10 |
| 1 | 1 | 12 | 5 | 26 | 6 | 15 | 5 | 6 | 2 | 4 | 1 | 6 | 3 | 5 | 3 | 11 |
| 90 | 81 | 248 | 264 | 677 | 210 | 243 | 145 | 183 | 108 | 102 | 48 | 187 | 62 | 97 | 78 | Sums |

each Point of the Compass at each Hour in 1844.

| lb. | lb. | lb. | lb. | lb. | lb. | lb. | lb. | lb. | lb. | lb. | lb. | lb. | lb. | lb. | lb. | h. |
|---|---|---|---|---|---|---|---|---|---|---|---|---|---|---|---|---|
| 0·1 | ... | 4·6 | 4·5 | 16·6 | 3·4 | 3·0 | 4·3 | 3·3 | 0·7 | 5·5 | 4·4 | 1·4 | 1·7 | 0·3 | 0·9 | 12 |
| 1·8 | 0·3 | 5·3 | 4·9 | 12·1 | 3·8 | 7·9 | 3·2 | 4·2 | 1·7 | 1·2 | 1·3 | 1·5 | 0·6 | ... | ... | 13 |
| 0·4 | 1·2 | 3·6 | 1·7 | 18·7 | 2.9 | 7·2 | 2·1 | 5·1 | 3·3 | 4·4 | 0·4 | 2·1 | 0·6 | ... | ... | 14 |
| 0·6 | 2·0 | 2·6 | 4·8 | 18·9 | 2·7 | 1·8 | 3·0 | 6·8 | 4·6 | 0·4 | ... | 3·2 | 2·1 | 0·3 | 0·6 | 15 |
| 0·2 | 1·3 | 3·1 | 6·6 | 16·0 | 2·5 | 3·6 | 8·8 | 0·3 | 2·5 | 1·4 | 0·2 | 3·1 | 0·2 | 2·0 | ... | 16 |
| 0·4 | 0·1 | 5·0 | 6·4 | 15·9 | 6·5 | 3·3 | 2·9 | 1·1 | 0·3 | ... | 2·7 | 2·4 | 1·0 | 0·8 | 1·9 | 17 |
| 4·1 | 1·5 | 5·4 | 7·0 | 11·1 | 3·6 | 5·3 | 1·4 | 5·2 | 0·2 | 4·0 | ... | 2·6 | 1·1 | 1·3 | 0·2 | 18 |
| 3·4 | 1·4 | 6·8 | 14·2 | 10·3 | 5·5 | 3·9 | 8·7 | 2·8 | 0·8 | 3·9 | ... | 3·2 | 1·8 | 0·7 | 1·1 | 19 |
| 1·6 | 1·5 | 4·4 | 20·0 | 13·3 | 5·1 | 6·2 | 4·0 | 10·0 | 6·6 | 0·8 | ... | 4·9 | 2·5 | 0·4 | 0·9 | 20 |
| 2·5 | 3·0 | 11·1 | 14·2 | 24·6 | 2·9 | 6·2 | 5·4 | 11·2 | 4·1 | 9.6 | 0·4 | 5·5 | 2·6 | 1·1 | 0·6 | 21 |
| 2·7 | 2·5 | 5·5 | 13·1 | 29·3 | 5·0 | 6·6 | 6·3 | 8·0 | 10·5 | 4·8 | 3·6 | 5·7 | 1·8 | 2·6 | 3·1 | 22 |
| 3·3 | 2·2 | 8.4 | 9·4 | 37·0 | 8·6 | 6·6 | 4·9 | 5·0 | 7·1 | 3·7 | 5·9 | 10·5 | 1·5 | 4·9 | 1·3 | 23 |
| 2·2 | 4·4 | 10·9 | 14·4 | 27·8 | 10·3 | 8·6 | 6·3 | 12·0 | 9·9 | 8·3 | 4·5 | 11·8 | 1·2 | 0·7 | 4·9 | 0 |
| 1·9 | 3·2 | 3·9 | 14·1 | 30·6 | 13·6 | 15·4 | 4·2 | 13·9 | 7·8 | 17·8 | 2·2 | 7·4 | 2·0 | 4·7 | 2·7 | 1 |
| 2·4 | 2·5 | 2·6 | 13·8 | 38·4 | 7·7 | 6·6 | 7·4 | 4·3 | 10·3 | 11·4 | 13·1 | 9·3 | 0·9 | 7·8 | 4·5 | 2 |
| 1·9 | 1·9 | 3·2 | 14·1 | 28·2 | 6·0 | 4·9 | 6·2 | 16·9 | 10·2 | 2·6 | 6·6 | 10·2 | 1·6 | 2·2 | 2·1 | 3 |
| 4·7 | 1·3 | 2·7 | 12·7 | 21·2 | 3·7 | 16·1 | 10·5 | 3·9 | 6·1 | 5·5 | 4·3 | 8·2 | 3·8 | 0·8 | 3·1 | 4 |
| 1·0 | 1·5 | 6·1 | 9·0 | 27·0 | 6·3 | 6·6 | 3·3 | 3·7 | 9·4 | 6·7 | 3·2 | 4·4 | 1·1 | 7·8 | 3·3 | 5 |
| 1·8 | 0·1 | 8·5 | 3·8 | 22·0 | 3·8 | 3·2 | 3·2 | 11·9 | 2·0 | 6·1 | 0·8 | 2·3 | 0·3 | 6·1 | 3·6 | 6 |
| 3·0 | 0·7 | 4·8 | 3·5 | 11·7 | 9·6 | 7·5 | 5·2 | 5·8 | 1·1 | 3·8 | 0·5 | 2·4 | ... | 4·9 | 0·9 | 7 |
| 6·4 | 3·5 | 7·1 | 2·1 | 15·5 | 1·5 | 5·9 | 1·4 | 8·2 | 2·1 | 1·3 | 0·1 | 1·8 | 0·7 | 0·4 | 3·3 | 8 |
| 3·2 | 0·1 | 7·7 | 5·4 | 13·5 | 2·9 | 2·4 | 1·7 | 11·1 | 0·3 | 0·6 | 0·3 | 1·7 | 1·2 | 1·4 | 1·1 | 9 |
| 0·5 | 0·9 | 1·4 | 5·2 | 19·8 | 3·0 | 2·8 | 7·2 | 5·9 | ... | 1·0 | 0·6 | 1·2 | 0·4 | 1·2 | 4·4 | 10 |
| 0·1 | 0·3 | 5·7 | 3·8 | 15·6 | 1·6 | 6·4 | 4·6 | 8·8 | 2·8 | 0·8 | 0·1 | 5·0 | 0·4 | 2·5 | 1·8 | 11 |
| 50·2 | 37·4 | 130·4 | 208·7 | 495·1 | 122·5 | 148·0 | 116·2 | 169·4 | 104·2 | 105·6 | 55·2 | 111·8 | 31·1 | 54·9 | 46·3 | Sums |

*Times which the Wind blew from the different Points of the Compass.*—It will be observed from the sums of times, Table XXXV., that the sums are greater for each of the 16 principal points than for the points immediately preceding and succeeding; this is due to the preference given by the observer in all doubtful cases to the principal points. The wind blew oftenest in 1844 (as in 1843) from the SW. and seldomest from the SE. by E. If we take the sums of the times for the 5 points SSW. to WSW. corresponding to SW., from WSW. to WNW. corresponding to W., and so for the others of the 8 principal points, we obtain the following numbers:—

| SW. | W. | NW. | N. | NE. | E. | SE. | S. |
|---|---|---|---|---|---|---|---|
| 1642 | 781 | 496 | 494 | 877 | 323 | 230 | 572 |

These sums give the same result as the more limited series for 1843. The wind blew oftenest from SW.; the number of times diminishes to NNW., where it is a secondary minimum; it increases to NE., where it is a secondary maximum, and diminishes again to about SE. by E., from which the wind blew seldomest. The wind blew twice as often from SW. as from NE., and twice as often from NW. as from SE. The numbers for the points SE., NW., NE., and SW., are approximately in the ratio of 1, 2, 4, and 8. The ratio of the numbers for the same points in 1843 was as 1, 4, 8, and 16. The wind blew twice as often from the points included between N., W., and S., as from the points in the opposite semicircle; the number from the hourly observations being for the former 2823, and for the latter 1422: the same result was obtained from the observations for 1843.

*Sums of Pressures with which the Wind blew from the different Points of the Compass.*—The greatest sum of pressures is that for SW., and the least is that for SE. by E. The sums of pressures for each of the 5 points, including the 8 principal points as above, are as follow:—

| SW. | W. | NW. | N. | NE. | E. | SE. | S. |
|---|---|---|---|---|---|---|---|
| lb. | lb. | lb. | lb. | lb. | lb. | lb. | lb. |
| 1104·7 | 643·4 | 358·6 | 277·7 | 452·3 | 219·8 | 160·6 | 302·4 |

The sums of pressures are a maximum about SW.; they diminish from thence to W., NW., and N., a secondary minimum occurring about that point; the sums increase thence to NE., where they are a secondary maximum, and diminish from NE. to SE., where the sums of pressures are least; they increase from the minimum at SE. to the maximum at SW.

*Mean Pressure of the Wind, while blowing, for different Points of the Compass.*—Dividing the sums of pressures, given by the above, for the 8 principal points by the number of times which the wind blew, we obtain the following as the mean pressures with which the wind blew from the different points:—

| SW. | W. | NW. | N. | NE. | E. | SE. | S. |
|---|---|---|---|---|---|---|---|
| lb. | lb. | lb. | lb. | lb. | lb. | lb. | lb. |
| 0·67 | 0·82 | 0·72 | 0·56 | 0·52 | 0·68 | 0·70 | 0·53 |

The wind, therefore, on the average, blew with the greatest force from about W. by N., and with the least force from about NE. This result is not nearly so distinct and regular as that for 1843, in which year the wind blew with the greatest force from NW., and with the least from NE.

*Diurnal Variation of the Resultant Pressures of the Wind.*—The resultant mean for the time during which the wind blew is a secondary minimum about $5^h\ 40^m$ A.M., a principal maximum about $1^h$ P.M., a principal minimum about $6^h\ 40^m$ P.M., and a secondary maximum about midnight. (See Table XXXVI.) The resultant means for the whole number of observations indicate generally the same law.

*Diurnal Variation of the Direction of the Resultant Wind.*—The result exhibited in the last column of Table XXXVI. was obtained from the observations for 1843, though not so distinctly. The direction of the wind is nearly W. at $2^h$ P.M., and it is nearly SW. after midnight. The direction of the wind is nearest W. about the time of maximum temperature, and nearest S. about the time of minimum temperature. The direction of the wind, therefore, is most westerly when its velocity is greatest, and most southerly when the velocity is least. It is extremely probable that both facts may be explained by the greater descent of the upper current when the air at the surface is most rarified, *i. e.*, at the time of maximum temperature. See remarks on the motions of the different currents, after Table XXXVII.

TABLE XXXVI.—Sums of the Pressures of Wind in Table XXXV. resolved into the four Cardinal Points of the Compass, together with the Value and Direction of the Resultant, for each hour in 1844.

| Mak. M. T. | Sums of Pressures resolved in | | | | Resultant | | | |
|---|---|---|---|---|---|---|---|---|
| | N. | E. | S. | W. | Sums. | Means with reference to Whole No. of Obs. | Means with reference to No. of Obs., Wind blowing. | Directions. |
| h. | lb. | lb. | lb. | lb. | lb. | lb. | lb. | ° |
| 12 | 14·6 | 12·3 | 28·8 | 40·8 | 31·8 | 0·10 | 0·26 | W. 26 S. |
| 13 | 12·0 | 16·1 | 31·5 | 36·5 | 28·2 | 0·09 | 0·21 | W. 44 S. |
| 14 | 12·8 | 15·5 | 31·5 | 41·4 | 31·9 | 0·10 | 0·25 | W. 36 S. |
| 15 | 15·3 | 17·1 | 30·8 | 39·7 | 27·4 | 0·09 | 0·20 | W. 34 S. |
| 16 | 13·4 | 16·4 | 32·1 | 37·9 | 28·5 | 0·09 | 0·23 | W. 41 S. |
| 17 | 17·6 | 15·6 | 31·0 | 34·5 | 23·2 | 0·07 | 0·17 | W. 35 S. |
| 18 | 17·4 | 16·5 | 33·1 | 35·4 | 24·6 | 0·08 | 0·17 | W. 40 S. |
| 19 | 20·1 | 17·7 | 40·2 | 45·8 | 34·5 | 0·11 | 0·21 | W. 36 S. |
| 20 | 28·6 | 22·1 | 44·1 | 58·8 | 39·8 | 0·13 | 0·20 | W. 23 S. |
| 21 | 36·0 | 24·7 | 55·4 | 73·8 | 52·8 | 0·17 | 0·26 | W. 22 S. |
| 22 | 39·4 | 26·6 | 54·9 | 79·4 | 55·0 | 0·18 | 0·25 | W. 16 S. |
| 23 | 46·7 | 26·1 | 61·5 | 83·7 | 59·5 | 0·19 | 0·26 | W. 14 S. |
| 0 | 47·0 | 28·5 | 65·8 | 98·9 | 72·9 | 0·23 | 0·31 | W. 15 S. |
| 1 | 54·1 | 31·2 | 63·1 | 109·5 | 78·8 | 0·25 | 0·33 | W. 7 S. |
| 2 | 62·1 | 32·9 | 65·0 | 102·9 | 70·1 | 0·22 | 0·30 | W. 2 S. |
| 3 | 46·1 | 31·9 | 53·8 | 89·0 | 57·6 | 0·18 | 0·25 | W. 8 S. |
| 4 | 40·4 | 28·1 | 49·7 | 79·1 | 51·8 | 0·16 | 0·24 | W. 10 S. |
| 5 | 38·3 | 26·9 | 52·0 | 70·3 | 45·5 | 0·14 | 0·21 | W. 18 S. |
| 6 | 30·6 | 24·4 | 40·1 | 55·3 | 32·3 | 0·10 | 0·16 | W. 17 S. |
| 7 | 25·4 | 20·8 | 35·2 | 46·7 | 27·7 | 0·09 | 0·16 | W. 21 S. |
| 8 | 21·4 | 18·4 | 36·5 | 37·8 | 24·6 | 0·08 | 6·17 | W. 38 S. |
| 9 | 18·6 | 15·3 | 32·8 | 36·5 | 25·5 | 0·08 | 0·18 | W. 34 S. |
| 10 | 16·2 | 18·9 | 33·3 | 39·5 | 26·8 | 0·09 | 0·19 | W. 40 S. |
| 11 | 19·7 | 17·6 | 31·6 | 44·5 | 29·4 | 0·09 | 0·20 | W. 24 S. |

The resultant means are obtained in the manner already described, Table XXXIV.

TABLE XXXVII.—Differences of the Directions of Motions of the Lower and Upper Currents of Air, as deduced from the Comparisons of the Direction of the Wind and the Motions of the Clouds.

| Currents. | Quadrant N. to E. | | | Quadrant E. to S. | | | Quadrant S. to W. | | | Quadrant W. to N. | | |
|---|---|---|---|---|---|---|---|---|---|---|---|---|
| | No. of Results. | Mean Diffs. of Motion. | Mean Result. | No. of Results. | Mean Diffs. of Motion. | Mean Result. | No. of Results. | Mean Diffs. of Motion. | Mean Result. | No. of Results. | Mean Diffs. of Motion. | Mean Result. |
| | | ° | ° | | ° | ° | | ° | ° | | ° | ° |
| Scud *minus* Wind. | 57 | +24 | | 14 | +30 | | 150 | +25 | | 47 | +21 | |
| | 34 | −34 | + 2 | 5 | −14 | +16 | 10 | −11 | +21 | 14 | −18 | +12 |
| | 3 | 0 | | 2 | 0 | | 7 | 0 | | 4 | 0 | |
| Cir.-str. *minus* Wind. | 28 | +42 | | 12 | +34 | | 103 | +37 | | 33 | +22 | |
| | 10 | −60 | +14 | 2 | −17 | +25 | 13 | −21 | +30 | 13 | −31 | + 7 |
| | 2 | 0 | | 1 | 0 | | 3 | 0 | | 3 | 0 | |
| Cir.-str. *minus* Scud. | 14 | +41 | | 7 | +22 | | 62 | +27 | | 41 | +25 | |
| | 17 | −37 | − 2 | 2 | − 5 | +11 | 13 | −17 | +17 | 27 | −30 | +25 |
| | 6 | 0 | | 4 | 0 | | 12 | 0 | | 12 | 0 | |
| Cirrus *minus* Wind. | 2 | +60 | | 5 | +63 | | 58 | +47 | | 14 | +31 | |
| | 6 | −43 | −17 | 0 | 0 | +63 | 6 | −11 | +40 | 4 | −40 | +12 |
| | 0 | 0 | | 0 | 0 | | 3 | 0 | | 4 | 0 | |
| Cirrus *minus* Scud. | 4 | +34 | | 3 | +30 | | 29 | +39 | | 28 | +31 | |
| | 9 | −44 | −20 | 0 | 0 | +30 | 9 | −27 | +20 | 8 | −30 | +14 |
| | 0 | 0 | | 0 | 0 | | 6 | 0 | | 10 | 0 | |

The scud current includes the cumulus. The directions of the motions of the clouds were obtained in the manner described in the Introduction, and it is believed with more accuracy than the direction of the surface current.

of each other; if this had not been the case, the difference of motion cirro-stratus *minus* scud would have been the same when obtained from the several individual comparisons and from the final differences. The mean difference of the motions of the cirro-stratus *minus* scud from the individual comparisons $= +16^\circ\cdot4$, but obtained from the two final results (cirro-stratus *minus* surface), *minus* (scud *minus* surface), it is $= 21^\circ\cdot7 - 13^\circ\cdot9 = +7^\circ\cdot8$; similarly the difference cirrus *minus* scud from the individual comparisons $= +12^\circ\cdot8$, but obtained from the results (cirrus *minus* surface), *minus* (scud *minus* surface), it is $= 31^\circ\cdot9 - 13^\circ\cdot9 = +18^\circ\cdot0$. The difference of the results by the two methods is evidently due to the different observations from which they are obtained; the law of sign is unaffected, the amount only is different. If we take the mean of the results for the comparisons of the three upper currents with the surface current, we find that

672 results give the mean upper current *minus* the surface current, $= +19^\circ\cdot0$

Similarly, if we combine the means for the comparisons of the cirrous and cirro-stratous currents with the scud current, we find that

323 results give the mean cirro-stratous and cirrous current *minus* the scud current, $= +15^\circ\cdot2$

If we now examine the relative motions of the mean of the three upper currents, and of the surface current in each quadrant, we obtain the following results:—

| | | | | |
|---|---|---|---|---|
| Quadrant N. to E., | 142 results, | mean upper current *minus* surface current, | | $= +4^\circ\cdot3$ |
| ..... E. to S., | 41 ..... | ..... | | $= +25^\circ\cdot0$ |
| ..... S. to W. | 353 ..... | ..... | | $= +27^\circ\cdot6$ |
| ..... W. to N., | 136 ..... | ..... | | $= +10^\circ\cdot2$ |

The mean upper current is therefore least positive of the surface current in the quadrant N. to E., and most positive in the quadrant S. to W.

If we compare in a similar manner the mean cirro-stratous and cirrous current with the scud current in each quadrant, we have

| | | | | |
|---|---|---|---|---|
| Quadrant N. to E., | 50 results, | mean cirro-stratous and cirrous current *minus* scud current, | | $= -6^\circ\cdot7$ |
| ..... E. to S., | 16 ..... | ..... | | $= +14^\circ\cdot6$ |
| ..... S. to W., | 131 ..... | ..... | | $= +18^\circ\cdot0$ |
| ..... W. to N., | 126 ..... | ..... | | $= +21^\circ\cdot0$ |

In the quadrant N. to E. the mean of the highest two currents is negative of the scud current. This is the only case where such difference is found; the upper current is most positive of the lower current in the quadrant W. to N.

It appears, then, that the mean upper current always proceeds from a point positive of the direction of the surface current, and that the motion of the mean highest current, with reference to the scud current, follows the same law, with one exception. This result is in accordance with the conclusions from the causes of the oblique motions of the aërial currents. Currents of air proceeding northwards from more southerly positions, retain a portion of the eastward velocity of the places from which they start; hence the south-easterly winds become more southerly, and the south winds become more south-westerly as they proceed northwards, the extent of the change of direction depending on the greater or less rapidity with which they lose their excess of eastward velocity, and acquire that of the more northerly latitudes over which they move. This loss of eastward velocity will depend upon the proximity of the aërial stratum to the surface of the earth, and therefore the lower currents of air will lose more of their eastward velocity than the higher currents, and the upper current of southerly winds will become more westerly than the lower currents. If, in considering the currents of air which proceed southwards from more northerly latitudes, we remember that the lower currents, from their proximity to the surface of the earth, acquire the greater eastward velocity of the lower latitudes more quickly than the upper currents, it will be evident that the lower current from the north-west will become less northerly than the upper current, and that the lower current from the north will become less easterly than the upper current. There appears to be an exception in the latter case: the highest current of air proceeds from a point less easterly than the middle current. It is believed that this anomaly is due to the following cause;—it frequently happens that when the lower current of scud is from a north-easterly point there is an upper current of cirrus or cirro-stratus from a north-westerly point: these two currents cannot have had the same origin, and therefore the explanation of the differences of motions given above cannot apply.

## EXTENT OF CLOUDED SKY.

TABLE XXXVIII.—Daily, Weekly, and Monthly Means of the Estimated Extent of Clouded Sky, the whole Sky covered being 10, for 1844.

| Civil Day. | Jan. | Feb. | March. | April. | May. | June. | July. | Aug. | Sept. | Oct. | Nov. | Dec. |
|---|---|---|---|---|---|---|---|---|---|---|---|---|
| 1 | 3·2 | 5·2 | 6·5 | 2·3 | 1·1 | 8·8 | 7·9 | 9·7 | [4·2] | 8·5 | 8·9 | [8·6] |
| 2 | 3·6 | 9·3 | 2·9 | 9·9 | 4·3 | [8·9] | 8·7 | 6·3 | 0·4 | 5·0 | 9·6 | 9·9 |
| 3 | 9·4 | 5·2 | [5·8] | 10·0 | 5·3 | 6·9 | 8·7 | 6·0 | 5·6 | 5·3 | [9·6] | 9·4 |
| 4 | 10·0 | [5·9] | 6·7 | 9·0 | 10·0 | 8·0 | 7·6 | [8·3] | 6·0 | 7·8 | 9·9 | 3·6 |
| 5 | 9·6 | 6·3 | 3·3 | 7·6 | [6·5] | 10·0 | 10·0 | 8·8 | 8·8 | 6·8 | 9·3 | 3·3 |
| 6 | 8·3 | 3·3 | 5·4 | 4·2 | 7·2 | 8·3 | 9·0 | 9·5 | 10·0 | [6·7] | 10·0 | 2·4 |
| 7 | [8·7] | 6·2 | 7·6 | [6·4] | 7·0 | 9·9 | [8·5] | 9·7 | 9·5 | 1·7 | 7·4 | 3·8 |
| 8 | 9·6 | 6·2 | 10·0 | 7·3 | 5·2 | 6·9 | 6·0 | 8·8 | [7·4] | 8·9 | 9·6 | [6·5] |
| 9 | 9·5 | 7·6 | 6·9 | 9·2 | 6·7 | [7·2] | 9·4 | 7·7 | 6·8 | 10·0 | 9·7 | 9·5 |
| 10 | 5·5 | 3·7 | [6·4] | 1·4 | 9·3 | 4·5 | 8·8 | 6·5 | 4·9 | 6·8 | [8·7] | 10·0 |
| 11 | 4·5 | [6·9] | 6·3 | 4·1 | 10·0 | 6·6 | 6·5 | [8·1] | 4·5 | 5·0 | 6·2 | 10·0 |
| 12 | 8·1 | 7·9 | 4·2 | 7·3 | [7·7] | 7·0 | 8·3 | 7·8 | 4·7 | 7·2 | 9·4 | 10·0 |
| 13 | 2·1 | 6·2 | 3·7 | 7·9 | 7·6 | 7·2 | 8·2 | 9·6 | 8·1 | [7·2] | 9·8 | 8·1 |
| 14 | [4·5] | 10·0 | 7·6 | [7·0] | 8·7 | 7·9 | [6·6] | 8·5 | 10·0 | 7·3 | 8·0 | 9·8 |
| 15 | 2·1 | 7·0 | 10·0 | 9·5 | 3·9 | 6·3 | 5·6 | 9·8 | [7·2] | 8·4 | 7·9 | [9·6] |
| 16 | 5·2 | 3·4 | 8·5 | 5·5 | 5·7 | [8·3] | 3·6 | 8·6 | 3·8 | 8·3 | 8·6 | 10·0 |
| 17 | 5·1 | 9·2 | [7·9] | 7·5 | 7·3 | 8·6 | 7·5 | 8·8 | 9·4 | 8·1 | [7·8] | 10·0 |
| 18 | 4·3 | [5·6] | 7·4 | 7·4 | 5·8 | 10·0 | 9·9 | [8·3] | 7·5 | 7·6 | 7·9 | 10·0 |
| 19 | 7·6 | 8·5 | 7·7 | 9·2 | [6·1] | 9·7 | 9·2 | 5·9 | 7·9 | 4·5 | 9·5 | 4·9 |
| 20 | 6·7 | 1·1 | 6·4 | 9·8 | 6·5 | 6·1 | 5·7 | 6·7 | 6·0 | [4·9] | 4·8 | 1·8 |
| 21 | [5·4] | 4·5 | 4·4 | [7·4] | 8·3 | 8·6 | [7·1] | 9·8 | 5·6 | 3·6 | 2·6 | 8·3 |
| 22 | 6·4 | 2·3 | 9·2 | 6·9 | 2·8 | 7·0 | 4·3 | 10·0 | [6·8] | 2·3 | 5·6 | [7·5] |
| 23 | 5·4 | 6·0 | 8·4 | 7·9 | 3·9 | [8·3] | 4·3 | 9·3 | 8·9 | 3·5 | 8·7 | 9·9 |
| 24 | 2·3 | 9·9 | [7·3] | 3·5 | 6·1 | 8·4 | 9·3 | 4·8 | 6·0 | 5·6 | [6·5] | 10·0 |
| 25 | 6·6 | [6·9] | 8·7 | 9·5 | 5·7 | 10·0 | 8·8 | [6·2] | 6·6 | 9·9 | 5·4 | 10·0 |
| 26 | 3·0 | 9·2 | 6·6 | 5·5 | [6·7] | 9·7 | 9·9 | 6·8 | 9·4 | 9·3 | 7·0 | 10·0 |
| 27 | 9·8 | 6·5 | 6·5 | 4·6 | 5·4 | 9·2 | 8·3 | 3·2 | 6·2 | [8·6] | 10·0 | 8·9 |
| 28 | [5·6] | 7·6 | 3·5 | [3·8] | 9·3 | 8·3 | [8·8] | 2·9 | 9·1 | 8·4 | 10·0 | 9·5 |
| 29 | 6·1 | 10·0 | 5·2 | 1·1 | 10·0 | 9·1 | 6·8 | 0·2 | [7·7] | 8·5 | 9·0 | [8·2] |
| 30 | 4·7 | | 0·3 | 0·8 | 9·6 | [8·6] | 9·1 | 5·9 | 8·0 | 10·0 | 9·5 | 8·5 |
| 31 | 3·5 | | [5·2] | | 10·0 | | 10·0 | 7·1 | | 9·9 | | 5·4 |
| Mean | 6·01 | 6·50 | 6·30 | 6·50 | 6·77 | 8·12 | 7·83 | 7·36 | 6·95 | 6·97 | 8·24 | 6·96 |

*Annual Variation of the extent of Clouded Sky.*—The sky was least clouded in January, and most clouded in November and June. The means for the meteorological quarters are as follow:—

Winter. Dec., Jan., Feb.,..... 6·49. Summer. June, July, Aug.,..... 7·77.
Spring. March, April, May,..... 6·52. Autumn. Sept., Oct., Nov., ..... 7·39.
Year 1844,..... =7·04.

The extent of clouded sky was greatest in summer, and least in winter, of 1844.

In the year 1844, on the average of the whole year, seven-tenths of the whole sky was clouded; the mean for the year 1843 (=6·89) gives nearly the same result.

The extremes of the daily mean extent of sky clouded are as follow:—

| | Jan. | Feb. | March. | April. | May. | June. | July. | Aug. | Sept. | Oct. | Nov. | Dec. |
|---|---|---|---|---|---|---|---|---|---|---|---|---|
| No. of days overcast,..... | 1 | 2 | 2 | 1 | 4 | 3 | 2 | 1 | 2 | 2 | 3 | 9 |
| Least daily mean,..... | 2·1 | 1·1 | 0·3 | 0·8 | 1·1 | 4·5 | 3·6 | 0·2 | 0·4 | 1·7 | 2·6 | 1·8 |

In December 1844, there were nine days during which no sky was visible. There was no day in 1844 in which clouds were not observed, the least observed being upon August 29, during which, on an average, one-fiftieth of the sky was covered by clouds.

TABLE XXXIX.—Mean Extent of Clouded Sky, with reference to the Moon's Age and Declination, in 1844.

| Moon's Age. | Extent of Clouded Sky. | Moon's Age. | Extent of Clouded Sky. | After Moon farthest North. | Extent of Clouded Sky. | After Moon farthest North. | Extent of Clouded Sky. |
|---|---|---|---|---|---|---|---|
| Day. | | Day. | | Day. | | Day. | |
| 15 | 6·92 | 0 | 7·14 | 0 | 7·38 | 14 | 7·88 |
| 16 | 7·69 | 1 | 7·47 | 1 | 7·64 | 15 | 7·32 |
| 17 | 8·12 | 2 | 7·57 | 2 | 8·23 | 16 | 7·12 |
| 18 | 7·19 | 3 | 7·87 | 3 | 6·93 | 17 | 6·90 |
| 19 | 7·59 | 4 | 7·04 | 4 | 6·99 | 18 | 7·52 |
| 20 | 7·63 | 5 | 6·83 | 5 | 6·18 | 19 | 7·28 |
| 21 | 7·33 | 6 | 7·52 | 6 | 7·61 | 20 | 7·19 |
| 22 | 7·41 | 7 | 6·99 | 7 | 6·45 | 21 | 6·49 |
| 23 | 7·67 | 8 | 7·66 | 8 | 6·25 | 22 | 6·24 |
| 24 | 6·63 | 9 | 7·45 | 9 | 7·21 | 23 | 6·19 |
| 25 | 6·32 | 10 | 5·88 | 10 | 6·65 | 24 | 6·88 |
| 26 | 7·29 | 11 | 6·16 | 11 | 6·22 | 25 | 7·79 |
| 27 | 7·17 | 12 | 5·68 | 12 | 7·12 | 26 | 7·48 |
| 28 | 6·62 | 13 | 6·10 | 13 | 8·19 | 27 | 7·52 |
| 29 | 6·87 | 14 | 6·87 | | | | |

Table XXXIX. has been formed from Table XXXVIII. in the manner described for Table II. of the magnetical results.

*Sky clouded with reference to the Moon's Age.*—The means of groups are as follow:—

| | | | |
|---|---|---|---|
| 12 days till 18 days, Full Moon,..... | 6·94 | 27 days till 3 days, New Moon,..... | 7·24 |
| 15 ..... 22 ... | 7·48 | 0 ..... 7 ... | 7·30 |
| 19 ..... 26 ... | 7·23 | 4 ..... 11 ... | 6·94 |
| 23 ..... 29 ... | 6·94 | 8 ..... 14 ... | 6·54 |

These quantities indicate, that the sky was most clouded a few days after full moon and after new moon, and least clouded a few days before full moon, and less clouded a few days before new moon than after it.

*Sky clouded with reference to the Moon's Declination.*—The means of groups are—

| | | | |
|---|---|---|---|
| 25 days till 3 days, Moon farthest North, | 7·57 | 11 days till 17 days, Moon farthest South, | 7·25 |
| 0 ..... 6 ... | 7·28 | 14 ..... 20 ... | 7·32 |
| 4 ..... 10 ... | 6·76 | 18 ..... 24 ... | 6·83 |
| 7 ..... 13 ... | 6·87 | 21 ..... 27 ... | 6·94 |

From these means, the sky was most clouded when the moon was farthest north and south, and least clouded at the intermediate periods. This result only agrees with that for 1843, in having a maximum when the moon was farthest south. In order to obtain any connection between the age or position of the moon and extent of clouded sky, it will probably be desirable to consider only those observations made between $6^h$ P.M. and $6^h$ A.M.

TABLE XL.—Hourly Means of the Estimated Extent of Clouded Sky for each Month in 1844.

| Mak. M. T. | Jan. | Feb. | March. | April. | May. | June. | July. | Aug. | Sept. | Oct. | Nov. | Dec. | Year. |
|---|---|---|---|---|---|---|---|---|---|---|---|---|---|
| h. | | | | | | | | | | | | | |
| 12 | 5·3 | 6·0 | 6·1 | 6·0 | 5·7 | 7·8 | 6·5 | 7·4 | 6·2 | 6·1 | 7·7 | 8·4 | 6·60 |
| 13 | 6·0 | 5·7 | 6·3 | 6·5 | 6·2 | 7·3 | 7·0 | 7·7 | 5·7 | 6·3 | 7·9 | 7·7 | 6·69 |
| 14 | 5·5 | 5·8 | 6·3 | 5·7 | 6·4 | 7·5 | 7·5 | 7·3 | 5·7 | 5·7 | 8·1 | 7·8 | 6·61 |
| 15 | 5·2 | 5·7 | 5·2 | 6·0 | 6·7 | 7·4 | 7·7 | 7·4 | 6·0 | 6·6 | 8·1 | 7·7 | 6·64 |
| 16 | 4·5 | 5·3 | 4·8 | 6·1 | 7·1 | 7·1 | 7·6 | 7·4 | 6·5 | 6·4 | 7·9 | 8·2 | 6·57 |
| 17 | 5·0 | 5·7 | 5·2 | 6·5 | 7·2 | 7·5 | 7·3 | 7·5 | 7·1 | 6·4 | 8·5 | 8·2 | 6·84 |
| 18 | 5·2 | 6·9 | 5·9 | 6·2 | 7·4 | 7·8 | 7·7 | 7·7 | 7·4 | 7·2 | 8·5 | 8·2 | 7·17 |
| 19 | 6·0 | 7·1 | 6·5 | 6·8 | 7·7 | 7·9 | 8·2 | 7·4 | 7·8 | 7·2 | 8·5 | 8·4 | 7·46 |
| 20 | 6·6 | 6·8 | 6·2 | 6·7 | 7·9 | 8·8 | 8·5 | 7·1 | 7·5 | 7·8 | 9·2 | 9·0 | 7·67 |
| 21 | 6·4 | 7·4 | 6·3 | 6·9 | 7·5 | 8·7 | 9·0 | 7·2 | 7·4 | 7·7 | 9·2 | 8·9 | 7·72 |
| 22 | 6·0 | 7·2 | 6·8 | 6·8 | 7·4 | 8·7 | 8·7 | 7·8 | 7·6 | 7·4 | 9·3 | 8·8 | 7·71 |
| 23 | 5·9 | 6·9 | 6·8 | 7·0 | 7·4 | 8·7 | 8·8 | 7·9 | 7·2 | 8·0 | 8·9 | 8·2 | 7·64 |
| 0 | 6·2 | 6·6 | 7·6 | 6·8 | 7·3 | 8·4 | 8·7 | 7·5 | 7·5 | 7·9 | 8·9 | 7·8 | 7·60 |
| 1 | 6·0 | 6·9 | 7·0 | 7·4 | 6·6 | 8·0 | 8·8 | 7·7 | 7·4 | 7·9 | 9·1 | 7·8 | 7·55 |
| 2 | 7·0 | 7·1 | 7·3 | 6·6 | 6·4 | 8·1 | 8·5 | 7·9 | 7·3 | 7·8 | 8·8 | 7·9 | 7·56 |
| 3 | 7·2 | 7·2 | 7·0 | 6·7 | 6·5 | 8·5 | 8·7 | 7·9 | 7·3 | 7·3 | 8·5 | 8·0 | 7·57 |
| 4 | 7·4 | 7·1 | 7·1 | 6·6 | 6·4 | 8·6 | 7·7 | 7·7 | 7·4 | 7·4 | 8·4 | 7·5 | 7·44 |
| 5 | 6·7 | 7·8 | 6·5 | 6·7 | 6·6 | 8·6 | 7·5 | 7·5 | 7·2 | 7·6 | 7·8 | 7·4 | 7·32 |
| 6 | 6·1 | 7·0 | 6·4 | 6·7 | 5·7 | 8·6 | 7·5 | 7·6 | 7·8 | 6·9 | 7·8 | 7·1 | 7·10 |
| 7 | 6·3 | 6·7 | 6·3 | 6·6 | 6·4 | 8·6 | 7·7 | 7·1 | 7·6 | 6·3 | 8·1 | 7·2 | 7·07 |
| 8 | 6·2 | 5·9 | 5·5 | 6·8 | 6·4 | 7·9 | 7·2 | 6·6 | 6·2 | 6·2 | 7·4 | 7·1 | 6·62 |
| 9 | 6·1 | 5·8 | 6·1 | 6·0 | 6·6 | 8·3 | 6·9 | 6·9 | 6·7 | 5·7 | 7·0 | 8·1 | 6·68 |
| 10 | 5·5 | 5·5 | 5·9 | 5·5 | 6·7 | 8·3 | 7·1 | 6·0 | 6·3 | 6·2 | 6·5 | 8·0 | 6·46 |
| 11 | 5·9 | 5·8 | 6·4 | 6·3 | 6·0 | 8·0 | 7·4 | 6·3 | 6·0 | 6·9 | 7·7 | 7·7 | 6·70 |

TABLE XLI.—Hourly Means of the Estimated Extent of Clouded Sky for each of the Astronomical Quarters, and for the Year 1844.

| Mak. M. T. | Nov. Dec. Jan. | Feb. March April. | May June July. | Aug. Sept. Oct. | Year 1844. | Mak. M. T. | Nov. Dec. Jan. | Feb. March April. | May June July. | Aug. Sept. Oct. | Year 1844. |
|---|---|---|---|---|---|---|---|---|---|---|---|
| h. | | | | | | h. | | | | | |
| 12 | 7·1 | 6·0 | 6·7 | 6·6 | 6·60 | 0 | 7·6 | 7·0 | 8·1 | 7·6 | 7·60 |
| 13 | 7·2 | 6·2 | 6·8 | 6·6 | 6·69 | 1 | 7·6 | 7·1 | 7·8 | 7·7 | 7·55 |
| 14 | 7·1 | 5·9 | 7·1 | 6·2 | 6·61 | 2 | 7·9 | 7·0 | 7·7 | 7·7 | 7·56 |
| 15 | 7·0 | 5·6 | 7·3 | 6·7 | 6·64 | 3 | 7·9 | 7·0 | 7·9 | 7·5 | 7·57 |
| 16 | 6·9 | 5·4 | 7·3 | 6·8 | 6·57 | 4 | 7·8 | 6·9 | 7·6 | 7·5 | 7·44 |
| 17 | 7·2 | 5·8 | 7·3 | 7·0 | 6·84 | 5 | 7·3 | 7·0 | 7·6 | 7·4 | 7·32 |
| 18 | 7·3 | 6·3 | 7·6 | 7·4 | 7·17 | 6 | 7·0 | 6·7 | 7·3 | 7·4 | 7·10 |
| 19 | 7·6 | 6·8 | 7·9 | 7·5 | 7·46 | 7 | 7·2 | 6·5 | 7·6 | 7·0 | 7·07 |
| 20 | 8·3 | 6·6 | 8·4 | 7·5 | 7·67 | 8 | 6·9 | 6·1 | 7·2 | 6·3 | 6·62 |
| 21 | 8·2 | 6·9 | 8·4 | 7·4 | 7·72 | 9 | 7·1 | 6·0 | 7·3 | 6·4 | 6·68 |
| 22 | 8·0 | 6·9 | 8·3 | 7·6 | 7·71 | 10 | 6·7 | 5·6 | 7·4 | 6·2 | 6·46 |
| 23 | 7·7 | 6·9 | 8·3 | 7·7 | 7·64 | 11 | 7·1 | 6·2 | 7·1 | 6·4 | 6·70 |

*Diurnal Variation of the extent of Clouded Sky.*—The maximum amount of clouded sky occurs generally two or three hours before noon, and minima about two hours before midnight and three or four hours

after it. The epochs of maxima and minima from Table XLI. for the year, and for each of the astronomical quarters (for which November, December, and January, constitute winter), are as follow:—

| | | | | |
|---|---|---|---|---|
| Winter, | + Max. $8^h\ 10^m$ A.M. | Min. $0^h\ 30^m$ P.M.<br>Max. $2^h\ 40^m$ P.M. | Min. $10^h\ 10^m$ P.M.<br>Max. $1^h\ 10^m$ A.M. | Min. $4^h\ 10^m$ A.M. |
| Spring, | ..... $1^h\ 10^m$ P.M. | | Min. $10^h\ 10^m$ P.M.<br>Max. $12^h\ 10^m$ A.M. | Min. $4^h\ 10^m$ A.M. |
| Summer, | ..... $8^h\ 40^m$ A.M. | | | Min. $12^h\ 10^m$ A.M. |
| Autumn, | ..... $1^h\ 10^m$ P.M. | | Min. $10^h\ 10^m$ P.M.<br>Max. $12^h\ 40^m$ A.M. | Min. $2^h\ 10^m$ A.M. |
| Year, | ..... $9^h\ 40^m$ A.M. | | Min. $10^h\ 10^m$ P.M.<br>Max. $1^h\ 10^m$ A.M. | Min. $4^h\ 10^m$ A.M. |

In winter and summer, the principal maximum of the extent of clouded sky occurred about $8^h\ 30^m$ A.M.; in spring and autumn, about $1^h\ 10^m$ P.M. In winter, spring, and autumn, there are nearly equal minima about $10^h$ P.M. and $2^h$ to $4^h$ A.M., with a secondary but indistinctly-marked maximum between. In winter, there is a secondary minimum about noon, with a secondary maximum about $2^h\ 40^m$ P.M.

In the mean for the year, the sky was most clouded about $9^h\ 40^m$ A.M., and least clouded from $8^h$ P.M. till $4^h$ A.M.

*The Ranges of the Hourly Means for each Month* are as follow:—

| Jan. | Feb. | March. | April. | May. | June. | July. | Aug. | Sept. | Oct. | Nov. | Dec. |
|---|---|---|---|---|---|---|---|---|---|---|---|
| 2·9 | 2·5 | 2·8 | 1·9 | 2·2 | 1·7 | 2·5 | 1·9 | 2·1 | 2·3 | 2·8 | 1·9 |

The ranges are, on the whole, least for the summer months, and greatest for the winter months. The ranges of the hourly means for the astronomical quarters and year are—

Winter,... 1·6. Spring,... 1·5. Summer,... 1·7. Autumn,... 1·5. Year 1844,... 1·3

So that, when the hourly means for three months are considered, the variation of the extent of clouded sky during the day is nearly the same for each quarter of the year.

## QUANTITY OF RAIN.

### TABLE XLII.—Quantity of Rain for each Month for 1844, by the Observatory, Garden, and Greenhouse Gauges.

| Month. | Observatory Gauge. | Garden Gauge. | Greenhouse Gauge. |
|---|---|---|---|
| | in. | in. | in. |
| January | 1·904 | 1·70 | 1·26 |
| February | 2·081 | 1·97 | 1·38 |
| March | 1·632 | 1·65 | 0·98 |
| April | 0·681 | 0·56 | 0·43 |
| May | 0·546 | 0·38 | 0·38 |
| June | 3·083 | 2·86 | 2·75 |
| July | 2·553 | 2·51 | 2·17 |
| August | 1·511 | 1·50 | 1·22 |
| September | 3·104 | 2·96 | 2·61 |
| October | 1·541 | 1·29 | 1·04 |
| November | 2·780 | 2·77 | 2·27 |
| December | 0·363 | 0·68 | 0·43 |
| Sums | 21·779 | 20·83 | 16·92 |

The funnel-mouth of the observatory rain-gauge is 8 inches above the soil; that of the garden-gauge, 6½ feet above the soil, and that of the greenhouse-gauge is 18 feet from the ground. The observatory-gauge is 218 feet, the greenhouse-gauge is 192 feet, and the garden-gauge is 171 feet, above the level of the sea.

*Annual Variation of the Fall of Rain.*—The greatest monthly falls of rain in 1844 were those for September and June; by the observatory-gauge, 3·104 in. and 3·083 in. respectively: the least monthly falls were those for December, May, and April, being by the same gauge 0·363 in., 0·546 in., and 0·681 in. respectively. The sums for each of the meteorological quarters by the observatory-gauge are—

| | | in. | | | in. |
|---|---|---|---|---|---|
| Winter. | Dec., Jan., Feb., | 4·348. | Summer. | June, July, Aug., | 7·147. |
| Spring. | March, April, May, | 2·859. | Autumn. | Sept., Oct., Nov., | 7·425. |

in.
Year 1844,..... 21·779.

The least amount of rain fell in the spring, and the greatest amount in autumn. The average fall of rain, for one day in 1844 = 0·060 in.

*The greatest Falls of Rain, within 24 hours, for each Month*, as obtained from the readings of the observatory-gauge at noon, are as follow:—

| Jan. | Feb. | March. | April. | May. | June. | July. | Aug. | Sept. | Oct. | Nov. | Dec. |
|---|---|---|---|---|---|---|---|---|---|---|---|
| in. | in. | in. | in. | in. | in. | in. | in. | in. | in. | in. | in. |
| 0·535 | 0·525 | 0·420 | 0·187 | 0·336 | 0·766 | 0·517 | 0·293 | 0·939 | 0·513 | 0·696 | 0·088 |

The greatest fall of rain for an astronomical day, in the year 1844, occurred September 14; and was = 0·939 in.

The numbers of days in each month of 1844, in which more than one-thousandth, one-hundredth, and one-tenth of an inch of rain was found in the observatory-gauge, are as follow:—

| | Jan. | Feb. | March. | April. | May. | June. | July. | Aug. | Sept. | Oct. | Nov. | Dec. |
|---|---|---|---|---|---|---|---|---|---|---|---|---|
| 0·001..... | 19 | 23 | 16 | 15 | 12 | 19 | 20 | 16 | 18 | 25 | 18 | 12 |
| 0·010..... | 14 | 22 | 15 | 8 | 4 | 13 | 18 | 15 | 11 | 14 | 13 | 8 |
| 0·100..... | 6 | 7 | 5 | 1 | 1 | 7 | 7 | 7 | 6 | 4 | 7 | 0 |

The greatest number of rainy days occurred in February and in October. In 1844, more than one-thousandth of an inch fell on 213 days, or on 58 days in 100; more than one-hundredth of an inch fell on 155 days, or on 42 days in 100; and more than one-tenth of an inch fell on 58 days, or on 16 days in 100.

In dividing the amount of rain for each month by the number of days on which it rained 0·001 inch, we obtain the following means:—

| Jan. | Feb. | March. | April. | May. | June. | July. | Aug. | Sept. | Oct. | Nov. | Dec. |
|---|---|---|---|---|---|---|---|---|---|---|---|
| in. | in. | in. | in. | in. | in. | in. | in. | in. | in. | in. | in. |
| 0·100 | 0·090 | 0·102 | 0·045 | 0·045 | 0·162 | 0·128 | 0·094 | 0·172 | 0·062 | 0·154 | 0·030 |

The numbers of days on which more than 0·001 inch of rain fell, together with the mean daily falls for each meteorological quarter, and for the year, are as follow:—

| | | | in. | | | | in. |
|---|---|---|---|---|---|---|---|
| Winter. | No. of days, | 54. | Mean fall, 0·081. | Summer. | No. of days, | 55. | Mean fall, 0·130. |
| Spring. | ..... | 43. | ..... 0·066. | Autumn. | ..... | 61. | ..... 0·122. |

in.
The year 1844,..... No. of days, 213. Mean fall, 0·102.

The mean fall was least when the number of rainy days was least, and, on the whole, greatest when the number of rainy days was greatest.

TABLE XLIII.—Quantity of Rain with reference to the Moon's Age.

| Moon's Age. | Greenhouse Gauge, 1837—1842. | Observatory Gauge, 1842—1848. | Moon's Age. | Greenhouse Gauge, 1837—1842. | Observatory Gauge, 1842—1848. |
|---|---|---|---|---|---|
| Day. | in. | in. | Day. | in. | in. |
| 15 | 3·10 | 4·31 | 0 | 2·27 | 5·17 |
| 16 | 3·60 | 4·57 | 1 | 4·75 | 6·18 |
| 17 | 3·94 | 3·87 | 2 | 4·07 | 8·83 |
| 18 | 3·99 | 6·09 | 3 | 2·52 | 5·82 |
| 19 | 3·68 | 5·25 | 4 | 2·30 | 6·65 |
| 20 | 2·99 | 5·08 | 5 | 3·06 | 5·44 |
| 21 | 3·59 | 4·41 | 6 | 3·05 | 3·07 |
| 22 | 3·87 | 6·22 | 7 | 5·02 | 7·46 |
| 23 | 1·86 | 6·41 | 8 | 3·41 | 8·14 |
| 24 | 2·86 | 5·66 | 9 | 4·02 | 3·78 |
| 25 | 3·17 | 5·33 | 10 | 3·65 | 5·61 |
| 26 | 3·71 | 5·31 | 11 | 3·66 | 5·35 |
| 27 | 5·16 | 3·27 | 12 | 2·62 | 5·11 |
| 28 | 4·49 | 4·47 | 13 | 3·81 | 2·69 |
| 29 | 3·40 | 5·35 | 14 | 5·28 | 3·12 |

The results for the greenhouse-gauge are deduced from observations from March 6, 1837, till April 9 1842, including 62 lunations. The results for the observatory-gauge are deduced from observations from July 7, 1842, till July 28, 1848, including 75 lunations.

*Amount of Rain with reference to the Moon's Age.*—The following are the means of groups for each of the gauges, and for both, giving the amount of rain fallen for 100 days in each group:—

| Period. | Greenhouse. | Observatory. | Both. | Period. | Greenhouse. | Observatory. | Both. |
|---|---|---|---|---|---|---|---|
| | in. | in. | in. | | in. | in. | in. |
| 12 days till 18, | 6·06 | 5·67 | 5·85 | 27 days till 3 days, | 6·15 | 7·44 | 6·85 |
| 15 ..... 22, | 5·79 | 6·64 | 6·26 | 0 ..... 7 | 5·46 | 8·11 | 6·91 |
| 19 ..... 26, | 5·20 | 7·28 | 6·34 | 4 ..... 11 | 5·68 | 7·59 | 6·72 |
| 23 ..... 29, | 5·68 | 6·81 | 6·30 | 8 ..... 14 | 6·10 | 6·44 | 6·28 |

The results for the two gauges differ. By the greenhouse-gauge, the greatest amounts of rain fell when the moon was both new and full, and the least fell at the quadratures. It is right to state, that much confidence could not be placed in any result from this gauge, since it is sheltered from NE. winds by neighbouring trees, and its position upon the ridge of the greenhouse-roof seems to unfit it for even relatively accurate determinations; as the summations were made for this gauge, it has not been considered proper to withhold them. By the observatory-gauge, the greatest amount of rain fell about three days after new moon, and the least fell at full moon; the same result is obtained from the sums for both gauges. The result for the observatory-gauge is very distinctly marked.

PRINTED BY NEILL AND COMPANY, EDINBURGH.

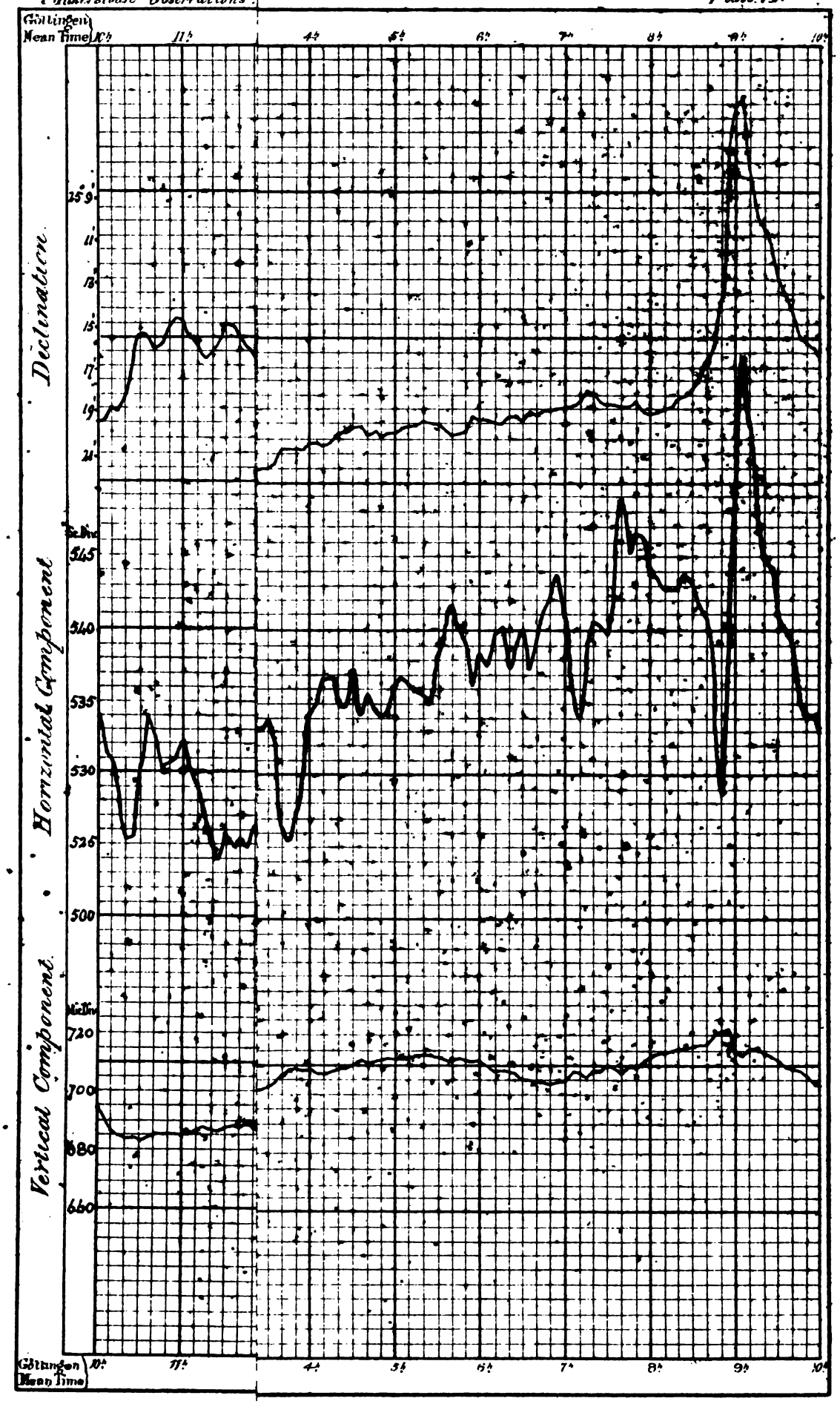
Göttingen Mean Time
10h
11h
4h
5h
6h
7h
8h
9h
10h
Declination.
25° 9'
11'
13'
15'
17'
19'
21'
Horizontal Component.
Scale Div.
545
540
535
530
525
500
Vertical Component.
Scale Div.
720
700
680
660
Göttingen Mean Time
10h
11h
4h
5h
6h
7h
8h
9h
10h

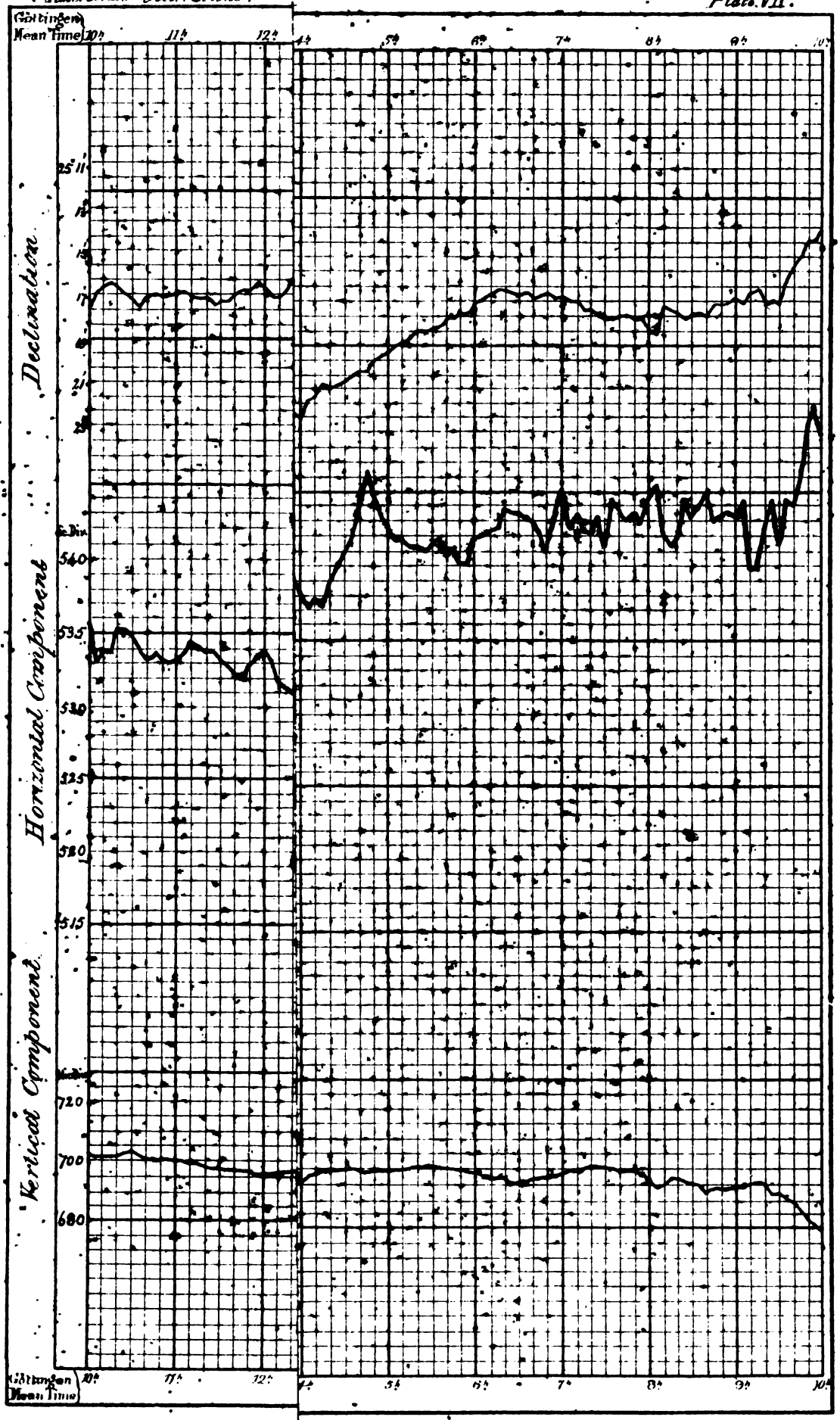
Göttingen Mean Time
10h
11h
12h
4h
5h
6h
7h
8h
9h
10h
Declination
25° 11'
17
21
Horizontal Component
540
535
530
525
520
Vertical Component
515
720
700
680

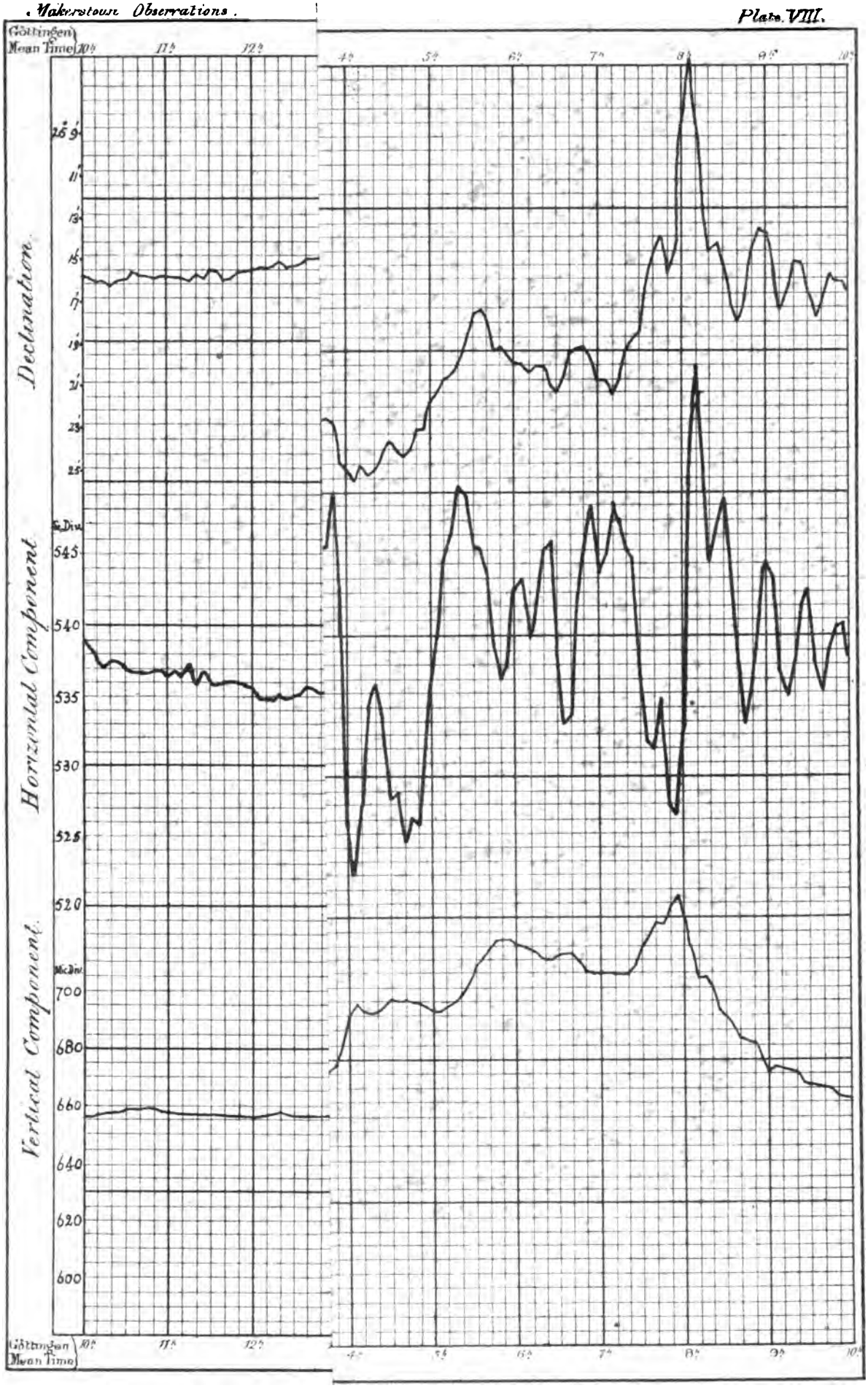
Göttingen Mean Time
10h
11h
12h
4h
5h
6h
7h
8h
9h
10h
Declination.
26° 9'
11'
13'
15'
17'
19'
21'
23'
25'
Horizontal Component.
Div.
545
540
535
530
525
520
Vertical Component.
Div.
700
680
660
640
620
600

Plate V.

Makerstoun Observations.

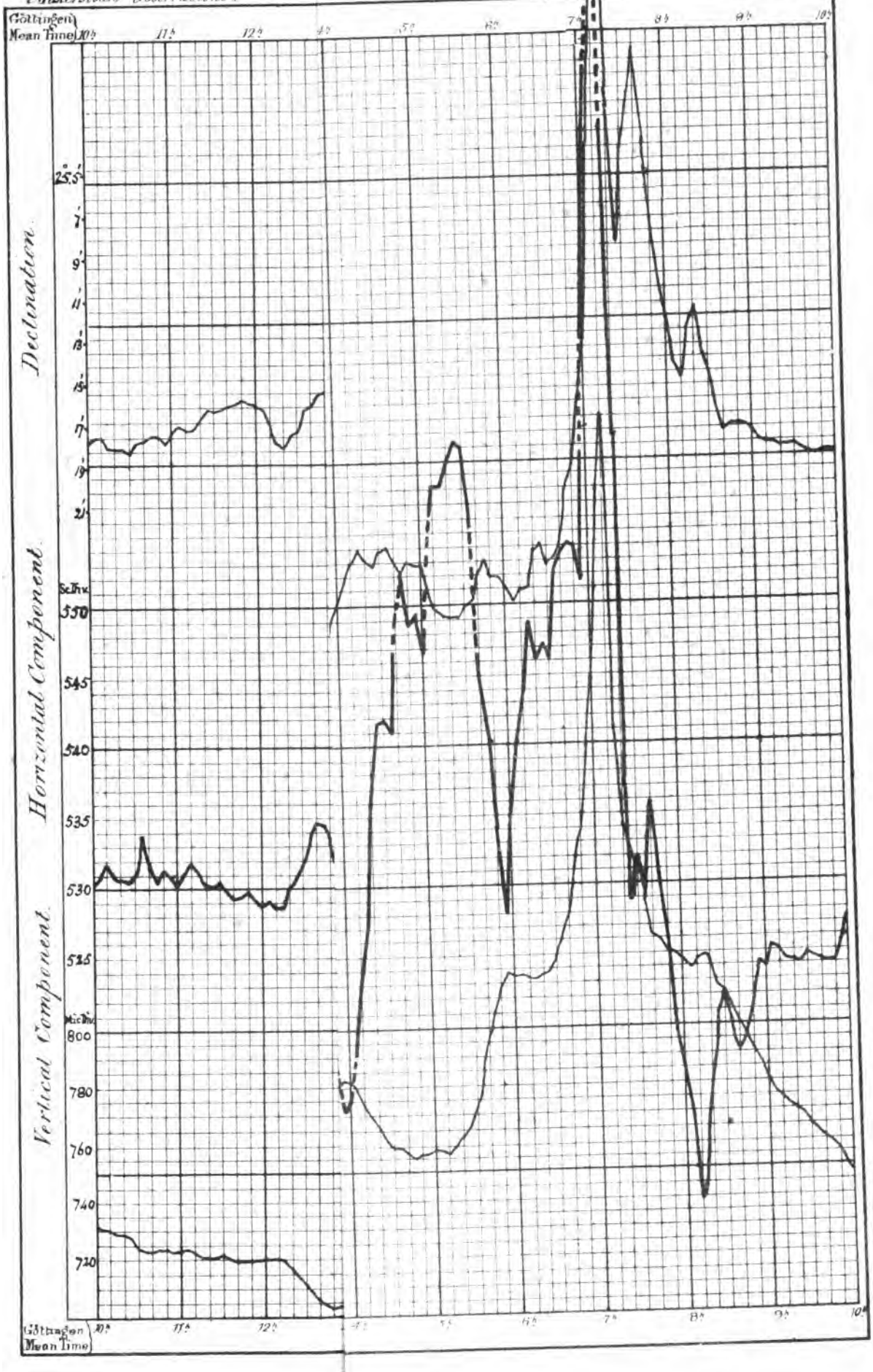

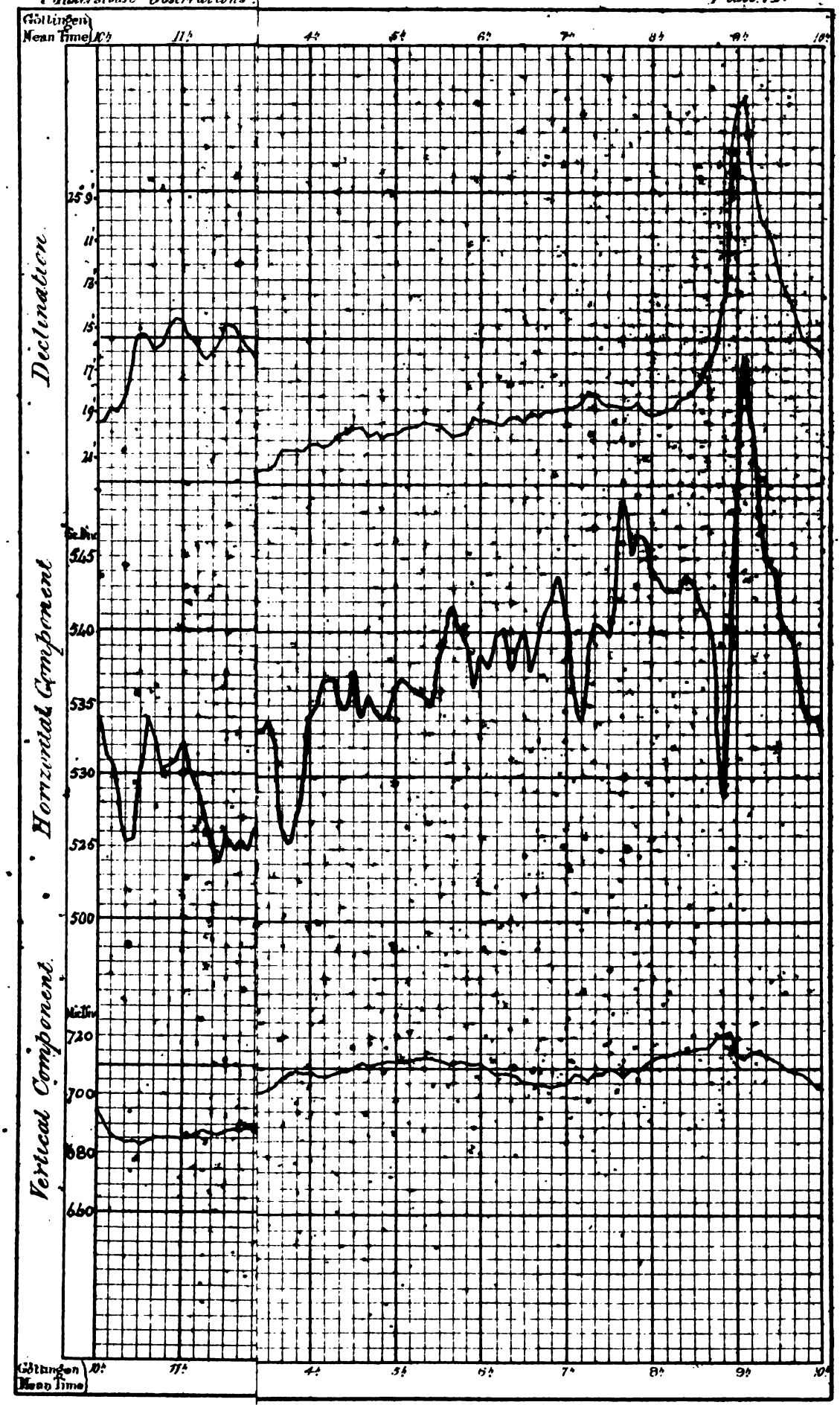
Göttingen Mean Time
10h
11h
4h
5h
6h
7h
8h
9h
10h
Declination.
25° 9'
11'
13'
15'
17'
19'
21'
Horizontal Component.
545
540
535
530
525
500
Vertical Component.
720
700
680
660
Göttingen Mean Time
10h
11h
4h
5h
6h
7h
8h
9h
10h

ce.

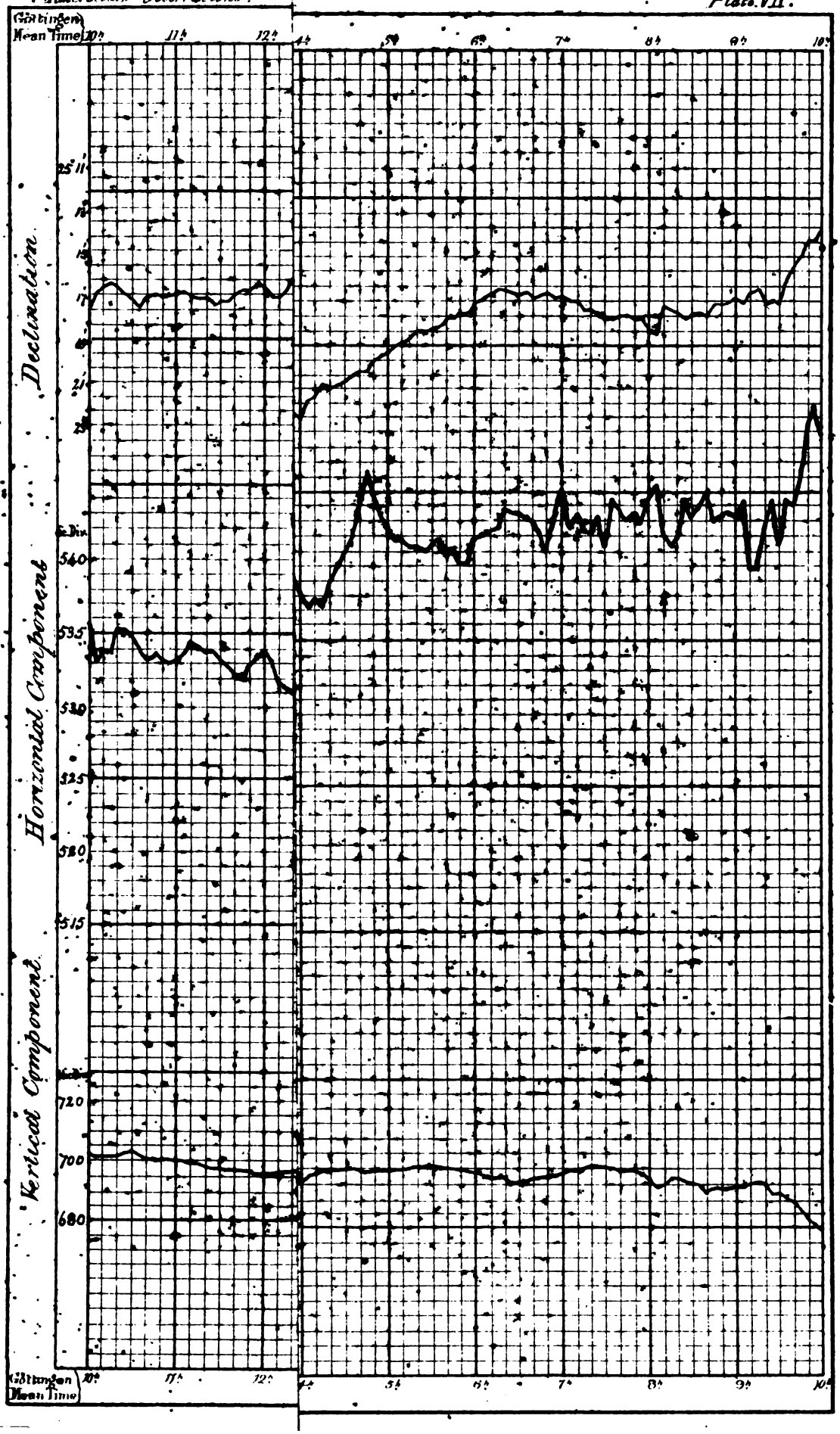
Göttingen Mean Time
10h
11h
12h
4h
5h
6h
7h
8h
9h
10h
Declination
Horizontal Component
Vertical Component
540
535
530
525
520
515
720
700
680
Göttingen Mean Time

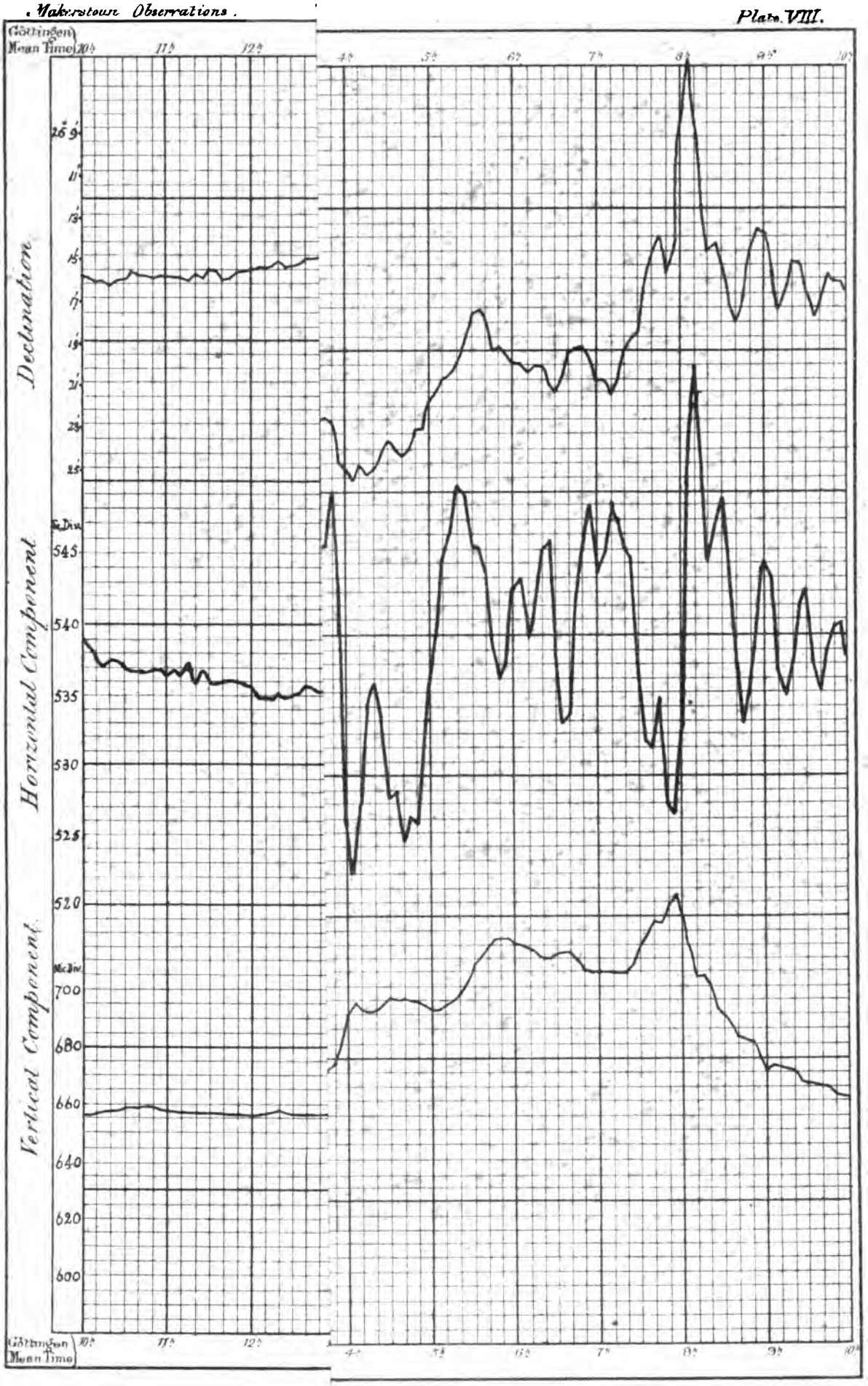
Göttingen Mean Time
10h
11h
12h
4h
5h
6h
7h
8h
9h
10h
Declination
26° 9'
11'
13'
15'
17'
19'
21'
23'
25'
Horizontal Component
545
540
535
530
525
520
Vertical Component
700
680
660
640
620
600

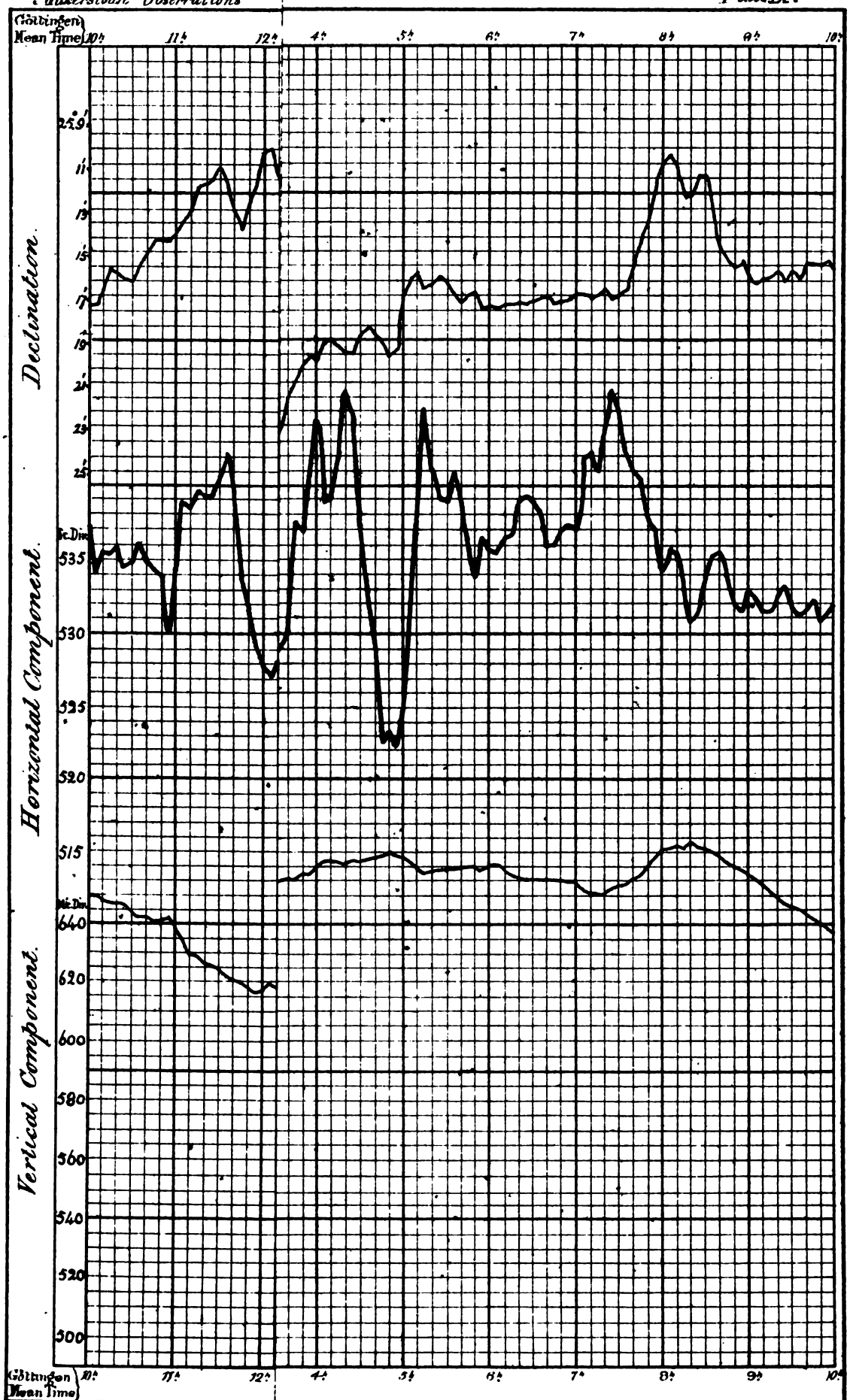
Göttingen Mean Time
10h
11h
12h
4h
5h
6h
7h
8h
9h
10h
Declination.
25°9'
11'
13'
15'
17'
19'
21'
23'
25'
Horizontal Component.
Sc. Div.
535
530
525
520
515
Vertical Component.
Sc. Div.
640
620
600
580
560
540
520
500
Göttingen Mean Time

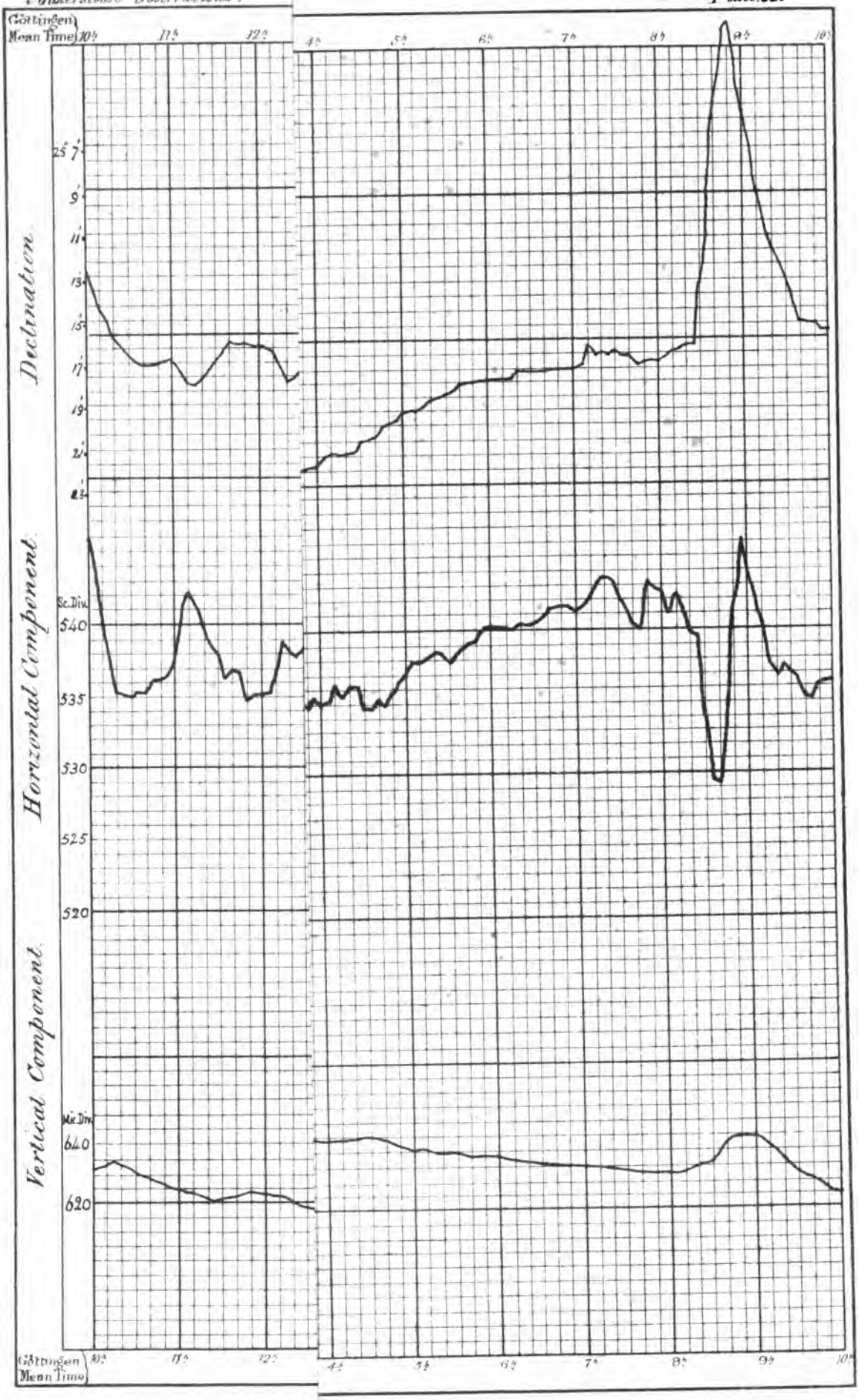
Göttingen Mean Time
10h
11h
12h
4h
5h
6h
7h
8h
9h
10h
Declination
25° 7'
9'
11'
13'
15'
17'
19'
21'
23'
Horizontal Component
Sc. Div.
540
535
530
525
520
Vertical Component
Sc. Div.
640
620

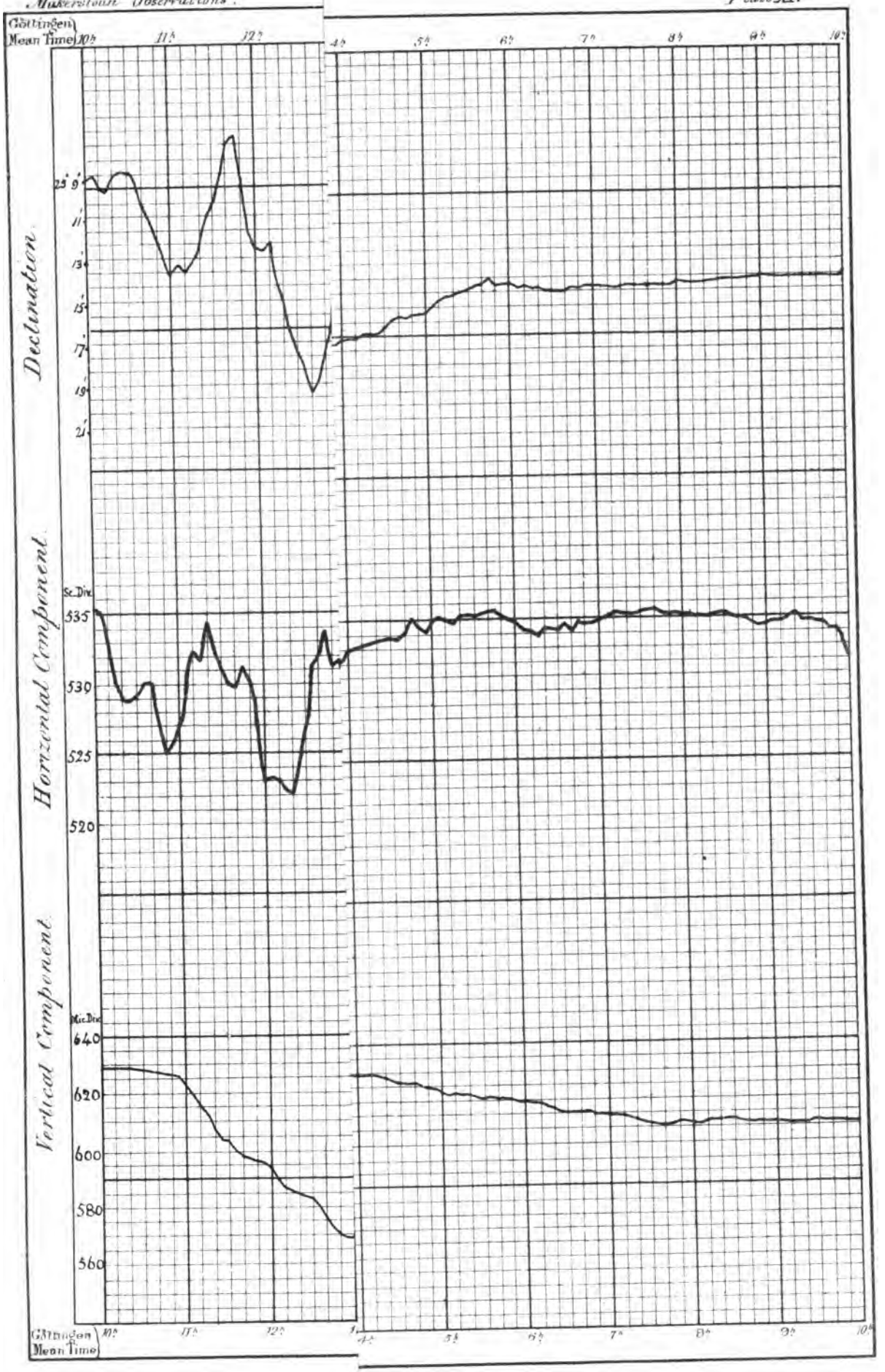
Göttingen Mean Time
10h
11h
12h
4h
5h
6h
7h
8h
9h
10h
Declination
25' 9'
11'
13'
15'
17'
19'
21'
Horizontal Component
Sc. Div.
535
530
525
520
Vertical Component
Sc. Div.
640
620
600
580
560
Göttingen Mean Time

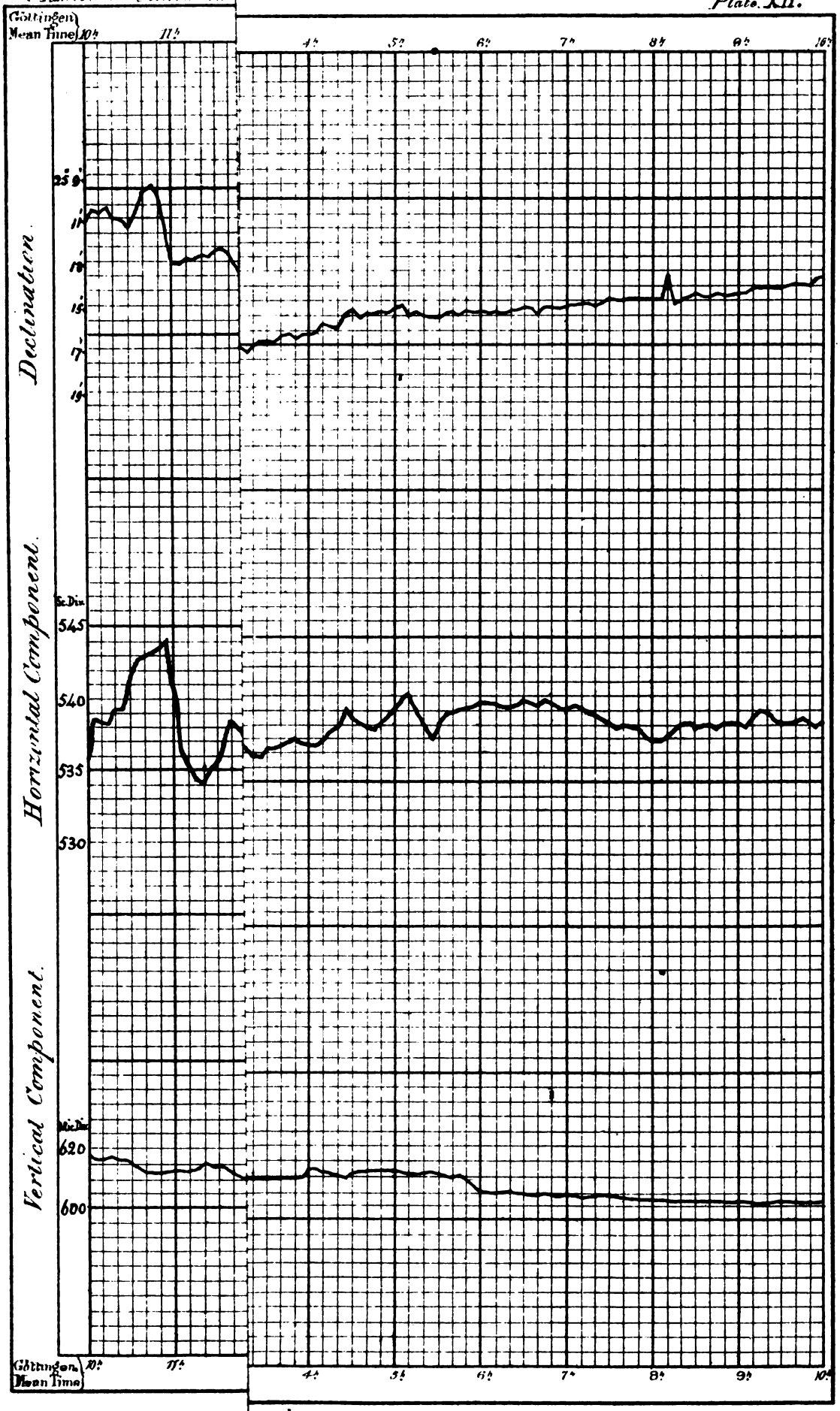
Göttingen Mean Time
10h
11h
4h
5h
6h
7h
8h
9h
10h
Declination.
25° 9'
11'
13'
15'
7'
19'
Horizontal Component.
Sc. Div.
545
540
535
530
Vertical Component.
Sc. Div.
620
600
Göttingen Mean Time
10h
11h
4h
5h
6h
7h
8h
9h
10h

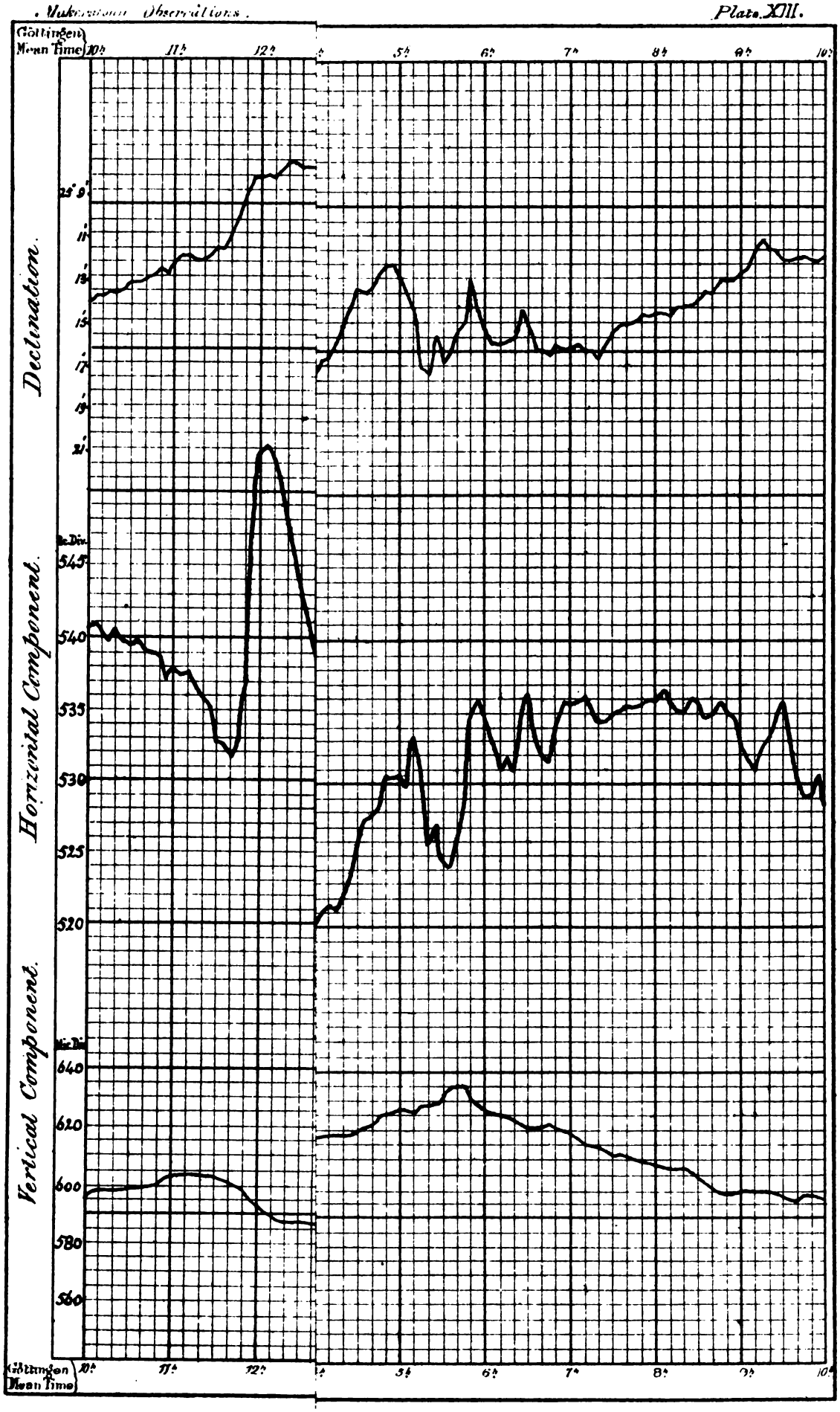
Göttingen Mean Time
10h
11h
12h
5h
6h
7h
8h
9h
10h
Declination.
25° 9'
11'
13'
15'
17'
19'
21'
Horizontal Component.
Mic. Div.
545
540
535
530
525
520
Vertical Component.
Mic. Div.
640
620
600
580
560
Göttingen Mean Time

Plate XIV.

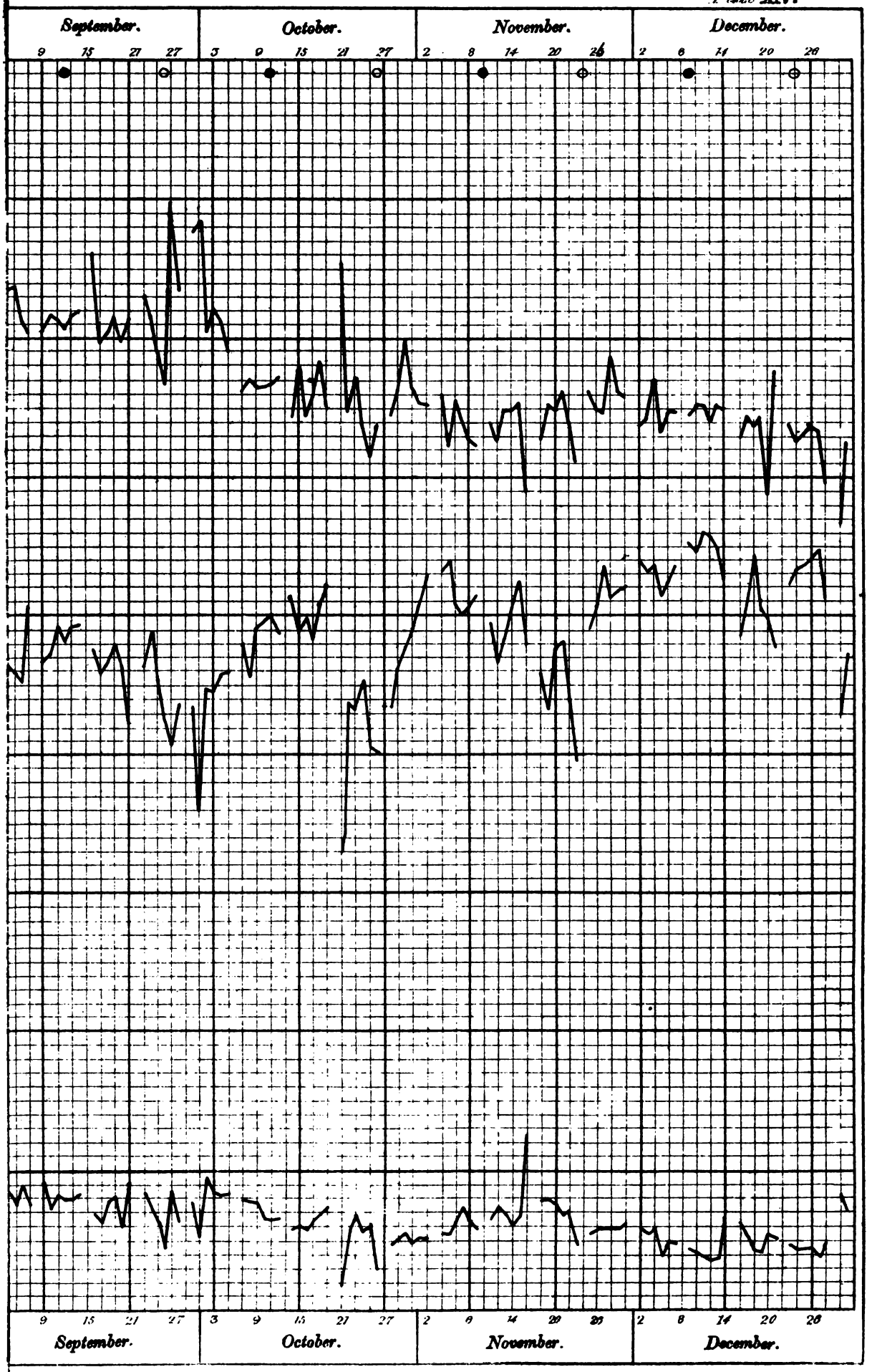
September.
9 15 21 27
October.
3 9 15 21 27
November.
2 8 14 20 26
December.
2 8 14 20 26
9 15 21 27
September.
3 9 15 21 27
October.
2 8 14 20 26
November.
2 8 14 20 26
December.

Plate XV.

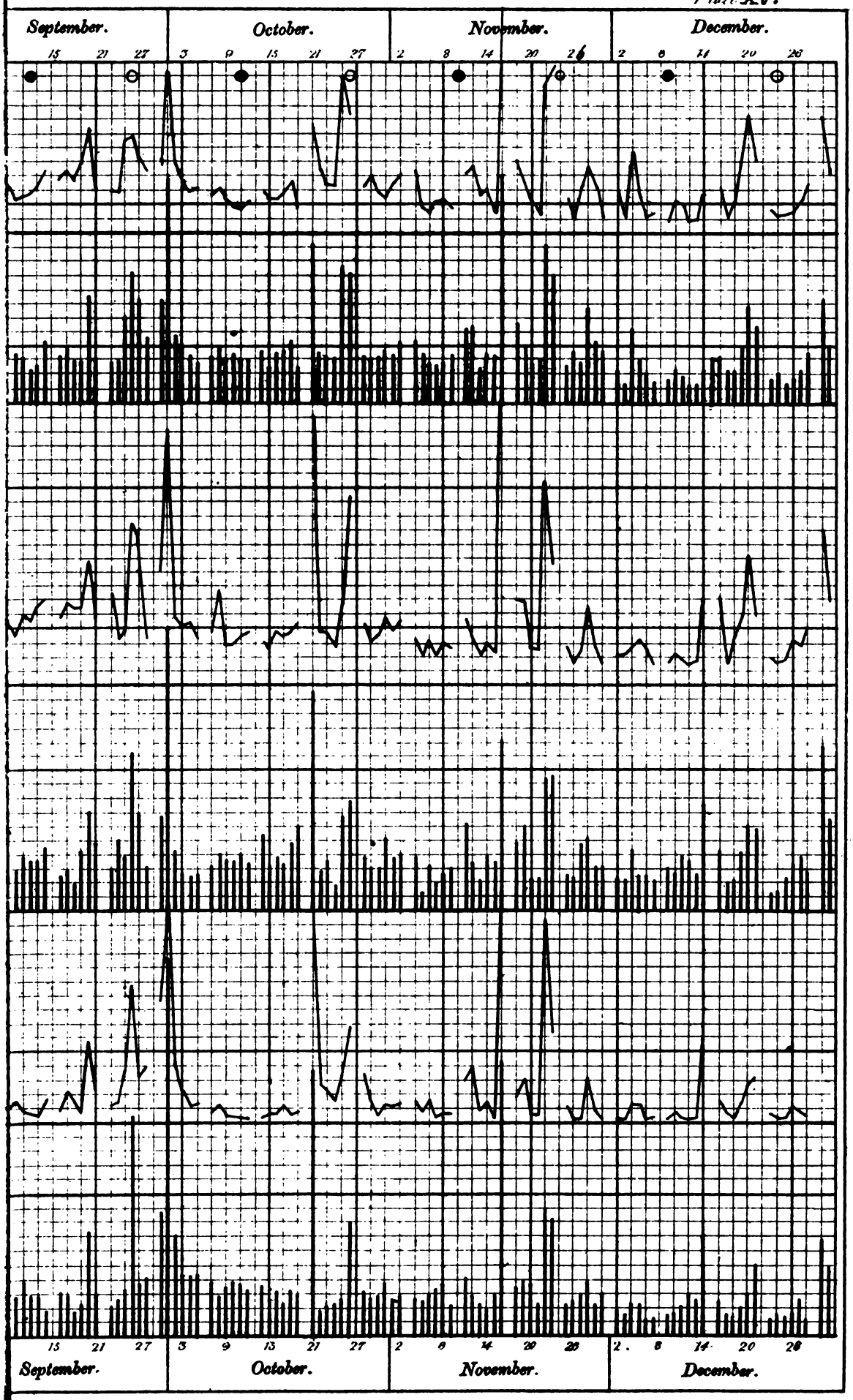
September.
15
21
27
October.
3
9
15
21
27
November.
2
8
14
20
26
December.
2
8
14
20
26
September.
October.
November.
December.

# HOURLY MEANS OF MAGNETICAL OBSERVATIONS, 1844.

*Hakerstown Observations.*

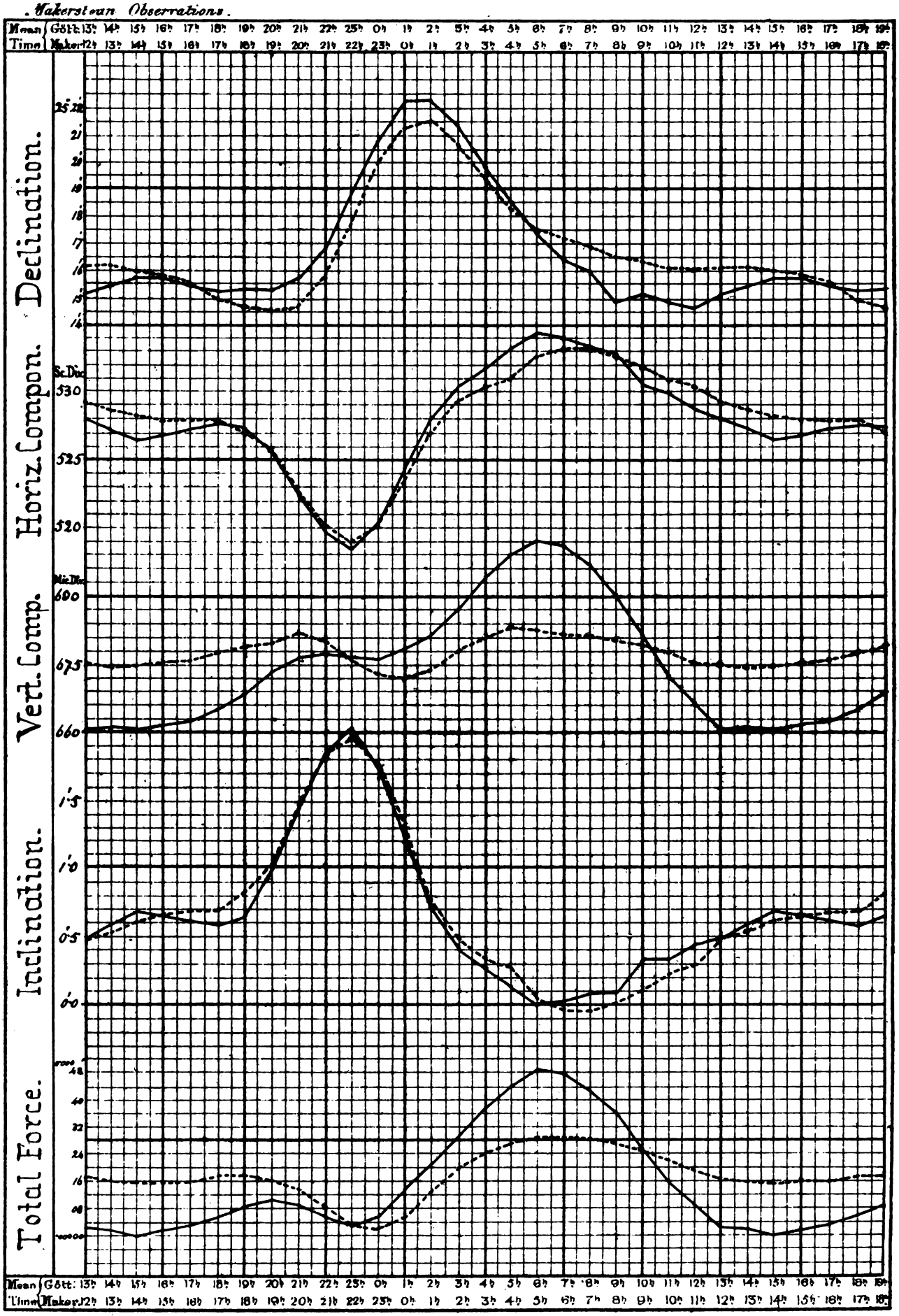


——— Mean of All ---------- Mean of 60 Days Undisturbed.

# HOURLY MEANS OF METEOROLOGICAL OBSERVATIONS, 1844.

Plate XVI.

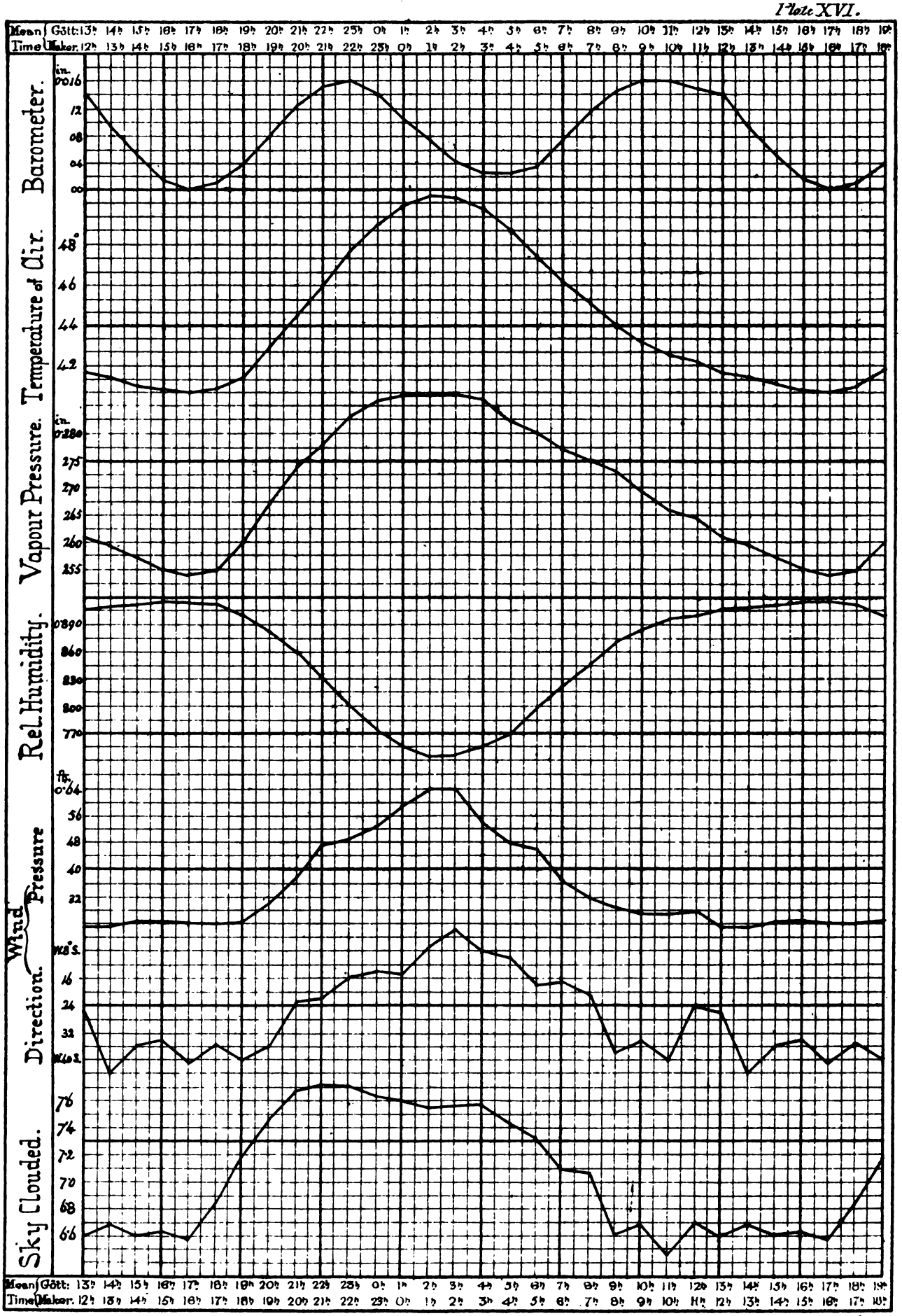

BRANNER EARTH SCIENCES
LIBRARY
AUTHORITY COLLECTION

DOES NOT CIRCULATE
BRANNER EARTH SCIENCES
LIBRARY

3-DAY

| DATE DUE | | | |
|---|---|---|---|
| | | | |
| | | | |
| | | | |
| | | | |
| | | | |
| | | | |
| | | | |
| | | | |
| | | | |
| | | | |
| | | | |

STANFORD UNIVERSITY LIBRARIES
STANFORD, CALIFORNIA 94305-6004